SunCache ICAT Final Report

Grant Number: ICAT 07-1

Grant Recipient: Davis Energy Group
123 C Street
Davis, CA 95616

Date: March 1, 2011

Conducted under a grant by the California Air Resources Board of the California Environmental Protection Agency

Disclaimer

The statements and conclusions in this report are those of the grantee and not necessarily those of the California Air Resources Board. The mention of commercial products, their source, or their use in connection with materials reported herein is not to be construed as actual or implied endorsement of such products.

Acknowledgements

The SunCache ICAT project team of Davis Energy Group and Harpiris Energy would like to acknowledge the role of Steve Church as Project Manager at the California Air Resources Board. We appreciate Steve's technical and administrative support throughout the project.

This report was submitted under Innovative Clean Air Technologies grant number ICAT 07-1 from the California Air Resources Board.

Abstract

SunCache is a low-cost, all-in-one passive solar water heating (SWH) system that uses polymer materials extensively to reduce cost and weight. The goal of this project was to demonstrate that SunCache is ready for widespread commercialization of affordable and cost-effective SWH after a decade of development at Davis Energy Group (DEG), funded largely by the U.S. Department of Energy through the National Renewable Energy Laboratory (NREL). In mid-2008, DEG engineer Eric Lee established Harpiris Energy to commercialize SunCache and supply the 80 SunCache collectors and ancillary equipment required for this demonstration project. Additional firms involved in the SunCache ICAT project include Sempra Utilities (site recruitment, match funding of monitoring activities), Information and Energy Services (field monitoring), as well as 19 different installation contractors.

The 80 collectors installed in this demonstration project were equally divided between single family home and multi-unit residential applications. A single contractor installed all 40 of the multi-unit collectors installed as three large-scale systems at a low-income apartment complex in Hanford, California. All but 11 systems were installed in Sempra Utilities territory. This report contains preliminary performance data for eight systems including two of three Hanford systems, and the parties have agreed to continue data collection for at least 12 months.

This project was funded primarily by the Innovative Clean Air Technology (ICAT) program at the California Air Resources Board. Match funding for this project was provided by DEG, the Office of Emerging Technologies at Sempra Utilities, and individual site owners who paid for all installation costs.

Executive Summary

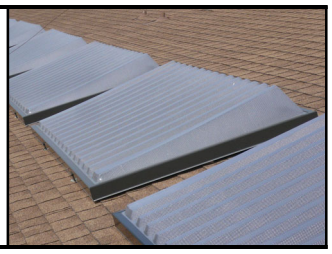

After nearly a decade of development at Davis Energy Group, with funding from the Department of Energy and the National Renewable Energy Laboratory, the SunCache solar water heating system was ready for commercialization in 2008. A new firm, Harpiris Energy, had been established in Salinas, California specifically to produce SunCache systems, and the Air Resources Board agreed to co-fund an 80-unit demonstration project through its Innovative Clean Air Technology (ICAT) program. Davis Energy Group led the demonstration project, with help from project partners Southern California Gas Company and San Diego Gas & Electric (through the Sempra Emerging Technology department).

39 property owners agreed to participate, including an apartment complex in Hanford, California. 19 contractors installed the hardware between September 2008 and May 2010. Property owners received free SunCache hardware, but paid for installation costs. Sempra hired a third-party firm, Information and Energy Services, to monitor five single family homes sites, as well as two of three large-scale SunCache arrays at the Hanford apartment site. Data was collected over seven months, with natural gas savings shown in the table below. Additional data such as hot water usage (a primary driver of solar water heating performance) and emissions savings are contained in this report.

Monthly Natural Gas Savings by Site (therms)

Month	# days	Hanford 1300	Hanford 1295	Claremont	Los Osos	San Luis Obispo	Long Beach	Los Angeles	SF AVERAGE	MF AVERAGE
June-10	varies	n/a	101.7	2.6	2.3	2.2	2.2	3.9	***2.6***	***101.7***
July-10	31	n/a	127.4	2.9	1.9	2.0	2.5	5.5	***3.0***	***127.4***
August-10	31	38.3	142.4	1.9	2.2	1.7	3.3	6.2	***3.0***	***142.4***
September-10	30	88.3	106.3	2.2	1.5	1.8	3.5	1.7	***2.2***	***106.3***
October-10	31	52.4	74.4	1.2	0.7	1.2	3.0	2.4	***1.7***	***74.4***
November-10	30	26.7	32.1	0.8	4.1	0.9	3.8	1.3	***2.2***	***32.1***
December-10	31	9.0	11.9	0.8	2.5	0.5	4.0	0.5	***1.6***	***11.9***
January-11	31	4.4	6.9	0.9	5.4	1.6	4.4	1.9	***2.8***	***6.9***
		36.5	***75.4***	***1.7***	***2.6***	***1.5***	***3.3***	***2.9***	***2.4***	***75.4***

Unfortunately, the passive SunCache solar thermal system is no longer in production at Harpiris Energy. Slow sales, combined with the low performance of systems monitored in the ICAT program, led Harpiris to shift focus to a solar storage tank product instead. At their core, both products share a similar configuration – a metal heat exchanger immersed inside of a rotationally-molded polyethylene vessel – but the tank addresses several of the key technical issues that hindered SunCache. Commercial deliveries of this new Harpiris solar storage tank began on 3/17/2011 with the shipment of the first 20 production tanks to UMA Solar, who has ordered 1,000 tanks.

Introduction

This document is the final report for the SunCache demonstration project funded by the California Air Resources Board through the Innovative Clean Air Technology (ICAT) program. The goal of this project was to demonstrate that SunCache is ready for widespread commercialization after a decade of development at Davis Energy Group (DEG), funded largely by the U.S. Department of Energy through the National Renewable Energy Laboratory (NREL). In mid-2008, DEG engineer Eric Lee established Harpiris Energy to commercialize SunCache and supply the 80 SunCache collectors and ancillary equipment required for this demonstration project. Additional firms involved in the SunCache ICAT project include Sempra Utilities, Information and Energy Services, and 19 different installation contractors.

Innovative Technology: SunCache

SunCache is a low-cost, all-in-one passive solar water heating (SWH) system that uses polymer materials extensively to reduce cost and weight. A folding drill template set and plug-and-play subassemblies streamline installation to minimize on-site labor and training requirements. This demonstration project confirmed previous laboratory and field testing regarding the long-term reliability and durability of SunCache.

SunCache was developed by Davis Energy Group (DEG) from 1999 to 2008 with significant support from the U.S. Department of Energy and administered by the National Renewable Energy Laboratory (NREL).

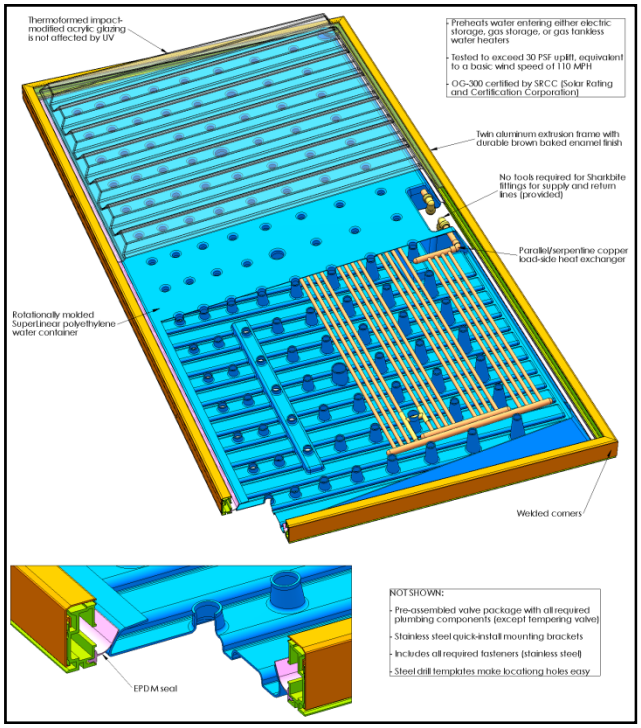

Figure 1: Cut-away View of SunCache

Technical Description

The SunCache collector with integral rooftop storage is shown in Figure 1. The primary SunCache component is a rotationally molded

(rotomolded) water-containment panel made from SuperLinear, a high-end grade of polyethylene from A. Schulman with good strength, toughness, UV-resistance and high-temperature performance. Playground equipment and kayaks are examples of rotationally molded products. In rotational molding, powdered plastic resin tumbles inside a clamshell mold that is rotated in two axes while inside an oven. The plastic adheres to the hot mold walls and builds up with a uniform thickness and without residual stresses. After the plastic has cured, the mold is removed from the oven and continues to rotate as the part cools to about 180°F, at which point the mold is opened, the part is removed, and the mold is recharged with more powdered plastic. The SunCache rotational molding process is shown in Figure 2 and Figure 3.

Figure 2

Figure 3

A brazed semi-serpentine copper heat exchanger is placed in the mold at the start of the cycle along with the plastic resin to create a “ship-in-bottle” panel at the end of the cycle, requiring only minimal post-processing. As the plastic cools around the inlet and outlet penetrations of the heat exchanger, it creates a watertight seal. Such a large insert in a rotationally molded part is an industry first. A particular challenge was to support the heat exchanger inside the panel mold without touching the mold walls, which would create leaks. To accommodate the 3% shrinkage of the panel as the plastic cools, the supports are able to slide along the heat exchanger tubes. Developing the heat exchanger and panel design to maximize molding yield rate took more than five years.

To add strength and resist ballooning from hydrostatic and expansion pressures, there are conical “through-connects” between the top and bottom planes of the panel, and the bottom is ribbed to allow moisture to dissipate from between the panel and the roof. The panel holds 50 gallons of water to absorb and store solar energy. This water remains in the panel, while the potable water circulates through the copper heat exchanger. During a year-long test to determine the permeation rate, DEG found that panels will only need to be topped-off once every five years, and this is the only regular maintenance required for SunCache. (Due to the absence of sunlight inside the panel, algae will not grow. Because the panel is unpressurized, any leak in the internal heat exchanger will result in pressurized potable water entering the panel, never the other way around.) The thin panel shape spreads the water weight across five trusses to avoid the need for structural reinforcement in most installations. The panel is triangular in profile to take advantage

of stratification, and to accommodate the heat exchanger in the upper half. To reduce the risk of leaks, heat exchanger inlet and outlet penetrations are located at the upper edge.

A thermoformed acrylic glazing covers the panel to create a semi-sealed air gap, which reduces convective losses to the atmosphere and improves aesthetics. SunOptics of Sacramento manufactures the glazing subassembly, including the perimeter frame made from extruded aluminum and painted with a durable baked enamel finish.

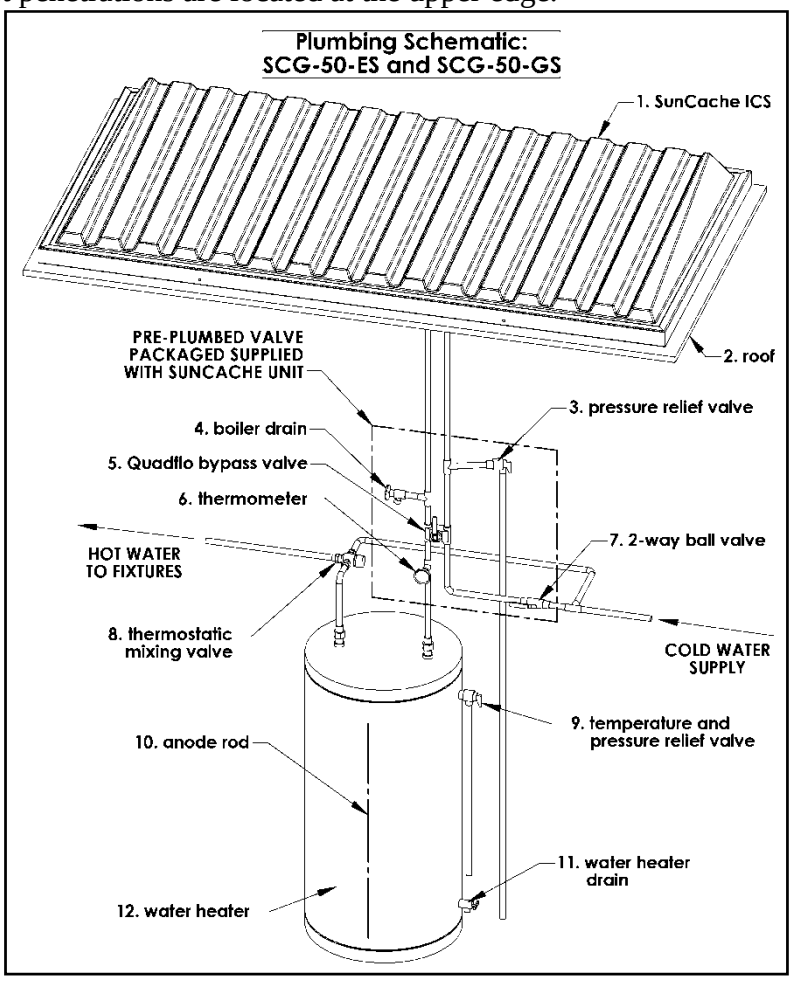

Figure 4: SunCache System Schematic

Like most SWH systems, SunCache preheats water before it enters a conventional electric or natural gas water heater. With the conventional water heater maintaining the desired setpoint, homeowners are only aware of SunCache operation from their lowered utility bills and a slight increase in capacity. There is no reduction in occupant comfort.

The plumbing schematic shown in Figure 4 is for a typical single family residential installation. The SunCache mounting system has been engineered to survive uplift forces of greater than 30 pounds per square foot, equivalent to winds in excess of 120 MPH, and confirmed in physical testing. The mounting system uses high-quality stainless steel brackets. Roof penetrations are sealed with roofing adhesives and robust flashing and gasket systems.

SunCache Advantages

- SunCache **costs less than half as much** as conventional SWH systems, including installation costs, before and after incentives. It has excellent economics, with "simple paybacks" that are shorter than competing SWH systems, photovoltaics and small wind power devices.
- SunCache **saves 35% to 70% off annual water heating costs** depending on Sunbelt location and usage pattern. Larger households save more energy and money; smaller households have higher savings percentages.
- Extensive use of **polymer materials** reduces copper and aluminum content. Prices of conventional systems are rising due to their high copper and aluminum content, but SunCache is made mostly from polymer materials (although all potable water is contained in

copper). Plastic parts can have attractive free-form shapes and incorporate molded-in features that would otherwise be difficult to fabricate in metal or glass.

- SunCache is **sold as a complete kit** and requires installers to provide only PEX or copper pipe (installer's choice) and a thermostatic mixing valve (required in some jurisdictions). This reduces installation costs and complexity by moving most of the plumbing labor from the field to factory, where labor costs are lower, quality is higher through better QA testing, and assembly times are faster. There is even a DIY kit that includes PEX pipe, insulation, and the mixing valve. (Cost is higher than contractor model.)
- **Installation is simple, fast and reliable.** Professional installers with basic plumbing and construction experience can be trained by watching a 20 minute video hosted on the Harpiris website. (DEG trained about half of the 19 installers that took part in the ICAT project – the rest used a 20-minute step-by-step training video viewed at the Harpiris Energy website.) Installation errors are extremely rare. A pre-built valve assembly is fabricated and tested in the factory for easy installation and fewer field connections. Steel templates with drill bushings make it easy to locate holes, and as a result roof leaks are rare. Low dry weight and separable panel and glazing make it easy for two people to lift a SunCache unit onto a roof with just a ladder.
- SunCache is the only passive SWH system to be **certified with optional PEX pipe.** This reduces cost, simplifies installation and improves freeze-resistance over copper pipe.
- The **Passive system** is simple and elegant, with a **field failure rate of just 3%.** Passive SWH systems are inherently more reliable than active systems, which can expect pump failure about once every five years.
- An **Industry-leading maintenance interval** of once every five years (to "top-off" the water level inside the molded panel).
- An attractive **low-profile design** mimics a skylight.
- An **Industry-leading 10 year warranty.** Furthermore, the SunCache warranty is the only one in the industry to cover freeze damage, provided the collector is installed in the Approved Installation Territory shown in Figure 5.

Figure 5: SunCache Installation Territory (plus HI)

- NREL testing has shown that SunCache will survive 14°F for 18 hours, making SunCache **the most freeze-tolerant passive SWH system available.**
- SunCache R&D at Davis Energy Group was focused on finding and eliminating design weaknesses and demonstrating durability through field testing and accelerated laboratory testing. **More than 250 systems are now installed and operating flawlessly**, with the oldest installed in 2002. 10 systems were installed in 2005 and 40 more in 2006. 2009 and 2010 shipments of production collectors totaled over 165 collectors (including ICAT demonstration project). Although field failures occurred in the ICAT project, corrective action by improving quality assurance testing at Harpiris Energy reduced the field failure rate from 15% to less than 5%.

- **SunCache advantages carry-over into the multi-unit/commercial market with the following additional advantages:**
    - Usage patterns show 50% higher per capita hot water usage than single family homes (SFHs), improving economics
    - Economies of scale reduce system cost by 25%-50% per collector versus SFHs (through lower equipment and labor costs)
    - Paybacks are half as long (with the same backup fuel)
    - Installation can be performed by property owner's favorite plumbing contractor
    - Large collector array provides redundancy, enhancing system reliability and persistency of savings
    - Engineering and permitting costs are a lower percentage of total system cost

Production Status

More than 200 SunCache prototypes were produced at Davis Energy Group for lab and field testing. After building the first 135 production SunCache units at a pilot facility sub-leased from the SunCache glazing vendor, commercial skylight manufacturer SunOptics of Sacramento, Harpiris built another 75 units since moving to a larger production/R&D facility in Salinas, California in October 2009. Production efficiency has improved steadily, resulting in lower per-unit material and labor costs. The most recent batch of 25 molded panels was the first ever to achieve 100% yield rate.

Intellectual Property

SunCache is protected by a comprehensive U.S. patent (#6,814,070), which is owned by DEG. Harpiris Energy has the exclusive license to use this patent, as well as the SunCache trademark.

Certification Status

SunCache received OG-300 certification from the Solar Rating and Certification Corporation (SRCC) in April 2008 for the following system configurations:

- Glazed, unglazed and tandem glazed (two glazed units in parallel)
- Electric storage, gas storage, and gas tankless backup water heaters

OG-300 certification is a prerequisite for most incentive programs (including the federal tax credit) and is the most common SWH certification in the U.S. OG-300 certification includes exposure testing to assess durability, as well as performance testing used to correlate a computer model that is then used to project annual energy savings.

To be installed in Florida, a SWH system must be certified by the Florida Solar Energy Center (FSEC). SunCache received FSEC certification in July 2009.

Energy Savings and Emissions Reductions

Based on TRNSYS computer simulations performed by SRCC as part of the OG-300 certification process, a SunCache ICS system saves about 60 therms/year in California climates. Despite California's well-known climatic variations, SWH savings are less geographically-

biased than might be expected; warmer locations with better solar resource also have warmer groundwater, and hence lower water heating loads than in colder locations. Multi-unit residential and commercial applications of SunCache have not been modeled, but are estimated at 125 therms/year/collector to account for higher usage (more gallons per day per collector) and better diversity of load (more frequent draws minimize standby losses of ICS collector).

The SWH market in California is in flux at this writing due to several factors. After the end of generous state and federal incentives for SWH in 1985, a major shake-out saw most SWH contractors move into other lines of business, such as pool heating, or close entirely. After installing 150,000 SWH systems from 1983-1985 in California, an average of just 1,000 systems were installed each year in California until 2008. 2009 and 2010 have seen installation rates drop by an estimated 10-20% in response to deteriorating economic conditions and uncertainty surrounding the SWH rebate program from the investor-owned utilities (IOUs). Hailed as a milestone when AB1470 was passed in 2007, SWH rebates were held up by the complex proceedings of the California Public Utilities Commission (CPUC). The program was finally launched on June 1, 2010 for SFH installations, however by that point most industry participants had adopted a wait-and-see attitude. This continues as the CPUC and IOUs work out the details for the commercial/multi-unit program, which is expected to consume the bulk of incentive funds.

Despite the slow pace of the rebate programs, California is poised for rapid growth in SWH installations. AB1470 established an impressive goal of 200,000 SWH systems installed by 2017.[1] When drafting the AB32 Scoping Plan in late 2008, the ARB adopted the AB1470 goal as the baseline, and created a "stretch goal" of two million SWH systems installed in California by 2020. As with all water and space heating efficiency measures in California, the biggest challenge for the SWH industry is the relatively low cost of natural gas.

Assuming a 25% market penetration for SunCache and an average per-collector savings of 95 therms/year, and using the Scoping Plan baseline of 200,000 SWH systems installed in California by 2017, it is estimated that 50,000 SunCache systems can have collective energy savings of 4.75 million therms/year. At 12.08 pounds of CO2 per therm of natural gas and 2205 pounds per metric ton, potential annual SunCache savings in California in 2017 are 26,000 tons of carbon.

[1] AB1470 seeks 200,000 SWH installations on single-family homes by 2017. During the CPUC proceedings, most participants agreed that AB1470 did not adequately clarify the breakdown between larger commercial/multi-unit systems and single family home installations, and also that the former market sector has more potential than the latter.

ICAT Project

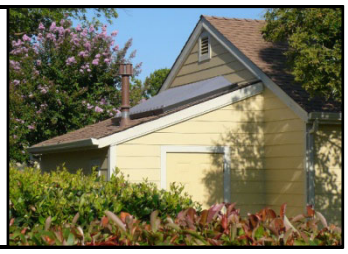

Project Background

In February 2007, the ARB issued a Request For Proposals for the Innovative Clean Air Technology (ICAT) program. From pages 1 and 3 of the RFP:

> "The Innovative Clean Air Technologies (ICAT) grant program supports demonstration projects for innovative air-pollution-control technologies. The objective is to advance such technologies toward commercial application in California. ICAT seeks technologies that are not yet marketed but are substantially ready for practical demonstrations of their utility for reducing emissions in California ICAT funds pilot demonstrations, the construction and deployment of prototypes, and practical demonstrations of technologies with the potential to be commercialized."

With SunCache R&D (funded by the U.S. Department of Energy (DOE) and NREL) wrapping up, the timing for an ICAT-funded demonstration project of early production SunCache systems was excellent. Davis Energy Group (DEG) submitted a pre-proposal by the March 30, 2007 deadline for a 100-unit SunCache demonstration project, and was selected to prepare a full proposal. Full proposals were due June 18, 2007 and in early October ARB staff notified DEG that it had been selected for an award. After board approval in January 2008, ARB asked for several changes, including scaling-back the size of the project from 100 to 80 units. According to ARB staff, even this reduced figure substantially exceeded the number of sites in any previous ICAT project. However, DEG felt that this economy of scale was critical to attract the private investment required to commercialize SunCache.

ARB sent DEG the contract for the 80-unit SunCache ICAT demonstration project on May 20, 2008. DEG requested and received approval for modest changes to the payment structure, which was (and remained) heavily skewed toward the end of the project. The contract was fully executed on June 26, 2008; 15 months after DEG submitted the pre-proposal. In early 2010, ARB granted DEG a 12-month no-cost contract extension.

Project Team

The composition of the project team changed slightly between the proposal and signed contract. The proposal called for Advanced Energy Products, a previous spin-off from DEG, to manufacture the SunCache systems in the demonstration project. Instead, DEG engineer and SunCache Principal Investigator Eric Lee established Harpiris Energy, LLC to commercialize SunCache. ARB staff approved this change and the proposal language was modified in the ARB contract.

Sempra Utilities, through the Office of Emerging Technologies of SCG/SDG&E, provided over $100,000 in cost match. Sempra ET contributed $50,000 cash to the project budget and also committed to spending at least $50,000 for third-party field monitoring. Sempra contracted with Information and Energy Services, Inc. (EIS) to monitor eight SunCache ICAT systems. Monitoring is ongoing, with expenses already in excess of the $50,000 budget. A total of 69 of the 80 SunCache demonstration units were installed in Sempra territory.

In addition, 19 firms participated in the SunCache ICAT project as installation contractors. Homeowners were responsible for most installation costs, with some early participants receiving $500 payments toward installation and permitting costs.[2] A total of 36 homeowners participated, plus a church and a low-income housing authority. Dawson Holdings, Inc. (DHI) was the largest outside participant, spending $51,000 to install 40 of the 80 SunCache collectors on their low-rise apartment complex in Hanford, California. DHI also purchased and installed SunCache collectors on two other apartment complexes outside the ICAT program.

Tasklist

The project tasklist is shown in Table 1. The contract called for 10-20 sites to be monitored, but EIS's proposal with an average cost of $10,000/site for hardware installation, data collection, and basic analysis meant that even 10 sites would cost double the $50,000 promised by Sempra Utilities in the original proposal. As a compromise, ARB, Sempra, DEG and EIS agreed to monitor eight sites for $80,000, with Sempra paying the additional monitoring costs.

Table 1: SunCache ICAT Tasklist

Task	Task	Milestones	Performed By
1. Recruit Sites	Recruit field test sites for 80 SunCache ICS collectors, with a goal of 20-40 collectors installed on one or more multi-unit sites	Report every 20 sites recruited with signed installation contracts	DEG
2. Train Installers	On-site training of at least 4 installation firms in Southern California	Report every 2 firms trained	DEG
3. Fabricate Prototypes	Prepare pilot production facility and fabricate 80 production-spec SunCache ICS systems, ship to field sites	Report every 20 systems completed	Harpiris Energy
4. Installation	Install 80 SunCache collectors on single family and multi-unit residential buildings, obtain building permits	Report after every 20 installations with building permits	Various installation firms with support from DEG
5. Monitoring	Monitor 8 SunCache systems: 6 SFH and 2 multi-unit	Reports data at 3 and 6 months time	Energy and Information Services (SCG/SDGE subcontractor)

[2] Once the project was up and running, it was no longer necessary to provide $500 rebates to attract interested site owners, allowing us to conserve the project budget and increase cost match.

6. Analyze and Report	Analyze field data, draw conclusions, draft final report	Final Report	DEG

Recruiting Sites

Due to the involvement of Sempra Utilities in the project, the SunCache ICAT demonstration project focused on recruiting sites that were customers of SCG and SDG&E territory. With Harpiris Energy and DEG both based in Northern California, targeting ICAT to Southern California was seen as an attractive way to expand the installed base of SunCache systems statewide.

Harpiris Energy created a web page describing the demonstration project, and where homeowners could apply to participate in the project. In addition to contact information and site address, the web form included home characteristics such as roof type, number of floors, and water heater type and fuel. This information made it easy to screen for the most qualified applicants, but all qualified homeowners were given the opportunity to participate. Where possible, installer references were provided, but it was the responsibility of the homeowner to sign a contract with a licensed installation contractor. The demonstration SunCache systems were assigned on a first-come, first-served basis determined by when a copy of the signed installation contract was received.

DEG used a variety of approaches to recruit sites for the SunCache demonstration project:

- DEG prepared a press release soon after the ICAT contract was signed, which was covered by several solar industry media outlets.
- Early site owners heard about the SunCache opportunity through word-of-mouth, or were previous partners of DEG and eager to participate.
- After the first four installations, formal marketing efforts commenced.[3] The first marketing strategy was to purchase web search results through Google AdWords. AdWords can be tailored to geographic region, making it possible to buy search results only from IP addresses in Southern California. The first $500 in the AdWords account lasted about two weeks, after which another $500 was invested. Unfortunately, this effort was largely ineffective at recruiting viable ICAT sites. Highly specific search terms ("free solar water heating demonstration project DEG") are usually less than $0.25 per click, but more common search terms ("solar water heater") are $2.00 to $2.50 per click. This is the price paid to Google every time someone clicks on the link and through to the destination page on the Harpiris site (www.harpiris.com). Despite the offer of free system hardware and a $500 rebate toward installation costs, the percentage of people filling out the participant questionnaire was below 10%. Each questionnaire was costing about $25. The Google AdWords effort was also frustrated by the large number of links generated by Google for the most useful "catch all" search terms. Google usually provides three sets of links (top of the page paid links, organic/natural search results in the middle of the page, and a column of paid links on the right side), creating a noisy and overwhelming experience for users. Even when a priority

[3] All marketing costs were paid for with match funding.

listing near the top was paid for, the percentage of viewers clicking on our link was usually below 5%.

- Considerably better success attracting homeowners was realized through Craigslist postings. Craigslist allows for similar ads to be posted only once every 48 hours throughout their system. This meant DEG could post to about three local Craigslist sites each week. Craigslist allowed the targeting of smaller geographic areas than Google AdWords. Craigslist regulars may be more impulsive or eager to participate in a limited offer for free products. Regardless, the results of using Craigslist were much better than AdWords, and there was no cost to post a listing.

- DEG's strategy included installing 20 to 40 of the 80 SunCache collectors in multi-unit or commercial application(s). In early 2009 Harpiris Energy was approached by Dawson Holdings, Inc. (DHI), a holding company with stakes in apartment complexes across the U.S., but with few properties in Southern California. Based in Sausalito, California, DHI had recently purchased two properties in Sacramento that they were rehabbing, and they were eager to include SWH. They were attracted to the low cost and simple operation of SunCache. Thanks to long-term financing of the purchase and rehab projects, DHI was able to purchase 65 SunCache collectors for the two Sacramento sites. DHI owns only one property in Southern California where they provide tenants with free hot water (and hence can benefit financially from installing SWH). This site in Hanford, California is just within SCG territory, and is so large that 40 SunCache collectors preheat only 6 of 10 water heaters on the property.

- The original SunCache ICAT contract with DEG had a term through May 15, 2010, but the pace of site recruiting in late 2009 was insufficient to install all 80 systems in time. The team considered several approaches and agreed to expand the installation territory to all of California for the final 11 systems. Mostly through word of mouth, Harpiris Energy was able to quickly recruit 11 Monterey-area homeowners for the final ICAT demonstration sites.

Fabrication and Installation

In September 2008, Harpiris Energy began SunCache production in 1150 SF (later 2300 SF) of warehouse space sub-leased from Sunoptics of Sacramento, a large commercial skylight manufacturer and also the supplier of the SunCache glazing assembly. This location was convenient as SunCache transitioned from R&D at Davis Energy Group, but quickly became too small for growing Harpiris operations. The Sacramento facility is shown in Figure 6.

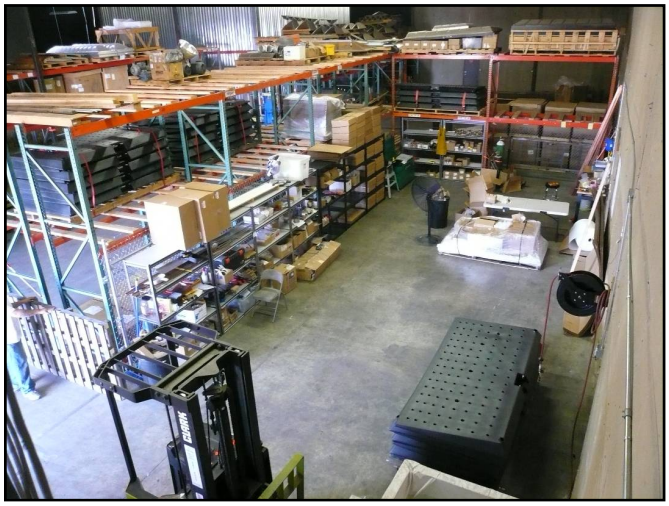

Figure 6: Sacramento Pilot Production Facility

As SunCache shipments picked up in 2009, Harpiris Energy moved to a 5600 SF unit in Salinas, California, close to many industrial suppliers. This facility contains office space, a conference/engineering office, and a large open shop space to be shared between SunCache production and R&D for the Harpiris Solar Storage Tank project funded by the California Energy Commission. Harpiris built a walk-in sand blaster at this facility to eliminate a vendor and reduce heat exchanger handling. All SunCache vendors are located within California. The Salinas facility is shown in Figure 7.

Figure 7: Salinas Production/R&D Facility

The first batch of Harpiris Energy production SunCache systems also became the first ICAT demonstration units. The team chose to install the first two demonstration systems "close to home" in September 2008 for final evaluation of the installation protocol before beginning Southern California installations. The first one was installed in Davis, and the second one in Carmel. After hands-on training by project PI Eric Lee, Cienega Energy Services installed three systems in the San Luis Obispo area in late 2008, followed by two systems installed in the Burbank area by Environmental Solar Design in January 2009 after an on-site training session. Throughout 2009 SunCache ICAT installations continued at the rate of several systems per month. On-site training sessions were held with ACME Environmental and Harding Construction, and a total of 19 installation contractors participated in the SunCache ICAT demonstration project. In early 2009, Harpiris Energy created a SunCache installation training video. This 20 minute, step-by-step video supplanted the need for any on-site training. It can be viewed at: http://www.harpiris.com/images/suncacheinstall_low_res.mov.

Permitting of SunCache ICAT systems was easier than anticipated. About 20% of jurisdictions asked for some sort of structural specifications, but many of those building departments were satisfied by the blanket SunCache structural report prepared by Michael Martin, a California licensed civil engineer, as part of the NREL SunCache R&D project. However, even the most reticent jurisdictions in the project eventually relented and issued building permits for SunCache installations.

SWH systems for multi-family housing, along with those used for commercial applications, have their own dedicated funding in the new solar thermal rebates funded by the California Public Utilities Commission and administered by the investor-owned utilities, and as such are expected to be a significant part of the rapidly growing market for SWH systems. Like all SWH systems, multi-family and commercial applications benefit by amortizing the fixed costs associated with all SWH systems, such as permitting and engineering, against larger monthly savings, minimizing their impacts. The basic pre-heat schematic is unchanged from SFH systems, just with appropriately larger plumbing sizes.

Wills Plumbing of Stockton completed the sole multi-family installation in Hanford as part of the ICAT project. Consuming one-half of the SunCache collectors in the ICAT project, this site has 40 SunCache collectors divided amongst three separate arrays, each pre-heating a pair of power-vent commercial 100 gallon water heaters. The arrays had 11, 14, and 15 collectors in each, and were plumbed using a "reverse return" manifolding arrangement as shown in Figure 8. Although they had completed two previous multi-unit SunCache installations for DHI at that point, Project PI Eric Lee was on-site for the start of the Hanford installation to confirm that refinements to the installation hardware worked as planned.

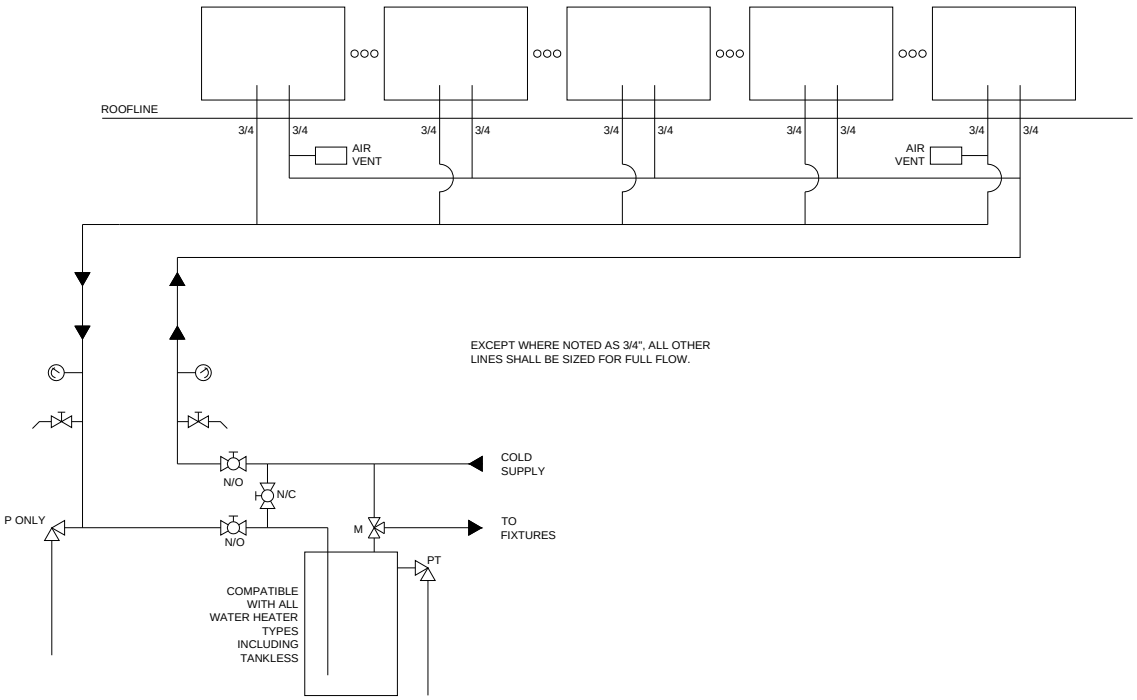

Figure 8: SunCache Plumbing Schematic for Commercial/Multi-Family Installations

The 80 SunCache units installed under the ICAT demonstration project are shown in Table 2. 39 different site owners participated and contributed a total of $123,565.39 in project match. Payments were from homeowner to installation firm for installation costs only. Although this information was not tracked, it is likely that most site owners claimed the 30% federal solar Investment Tax Credit for residential solar thermal and solar electric system costs. A small percentage will likely also claim the new SWH rebates offered by the investor-owned utilities IOUs) in California, which can be claimed retroactively for all installations installed in IOU territory after July 15, 2009. SunCache satisfies the technical and certification requirements of the IOU rebate (known as California Solar Initiative – Thermal, or CSI-Th), but claiming this rebate is dependent on the participation of their installation contractor in a mandatory 1-day workshop held regularly by the IOUs.

The SunCache systems delivered during the ICAT project included the very first production units. All together, the SunCache collectors delivered to the ICAT sites represented 80 of the first 240 SunCache systems produced by Harpiris Energy. As with many new technologies, there were some early field failures. Less than 10 SunCache systems failed in the field, with the majority going to early ICAT deliveries. Investigation by Harpiris Energy revealed that field failures were caused by either heat exchanger leaks that went un-detected at the factory, or defective diverter valves used in the pre-fabricated valve package supplied with most SunCache collectors. More effective quality control testing (through the addition of a fourth leak test in the QA process) corrected the former, and replacement valve packages were provided by Harpiris Energy in the latter cases.

Table 2: SunCache ICAT Demonstration Sites

ID	Address	Installation Firm	Install Date	Installation Cost Match
1	Carmel CA	Applied Solar Energy	9/25/2008	$480.00
2	Davis CA	McNeil Construction	9/30/2008	$1,899.09
3	Los Angeles CA	Environmental Solar Design	1/16/2009	$7,000.00
4	Los Angeles CA	Environmental Solar Design	1/16/2009	$7,000.00
5	San Luis Obisbo CA	Cienega Energy Services	10/30/2009	$1,825.00
6	Los Osos CA	Cienega Energy Services	10/22/2008	$1,653.30
7	Nipomo CA	Cienega Energy Services	12/15/2008	$1,643.00
8	San Luis Obisbo CA	self install	2/27/2009	-
9	Bakersfield CA	Harding Construction	7/25/2009	$473.00
10	Ramona CA	Solar Service of San Diego	8/17/2009	$2,750.00
11	Ramona CA	Solar Service of San Diego	8/17/2009	$3,350.00
12	San Diego CA	Solar Service of San Diego	8/17/2009	$2,750.00
13	Escondido CA	Solar Service of San Diego	8/17/2009	$3,450.00
14	Ramona CA	Solar Service of San Diego	8/17/2009	$3,450.00
15	Claremont CA	Hartman Baldwin	7/9/2009	$3,299.00
16	Claremont CA	Klaus & Sons	10/14/2009	$3,700.00
17	Oak View CA	California Solar	5/1/2009	$4,733.00
18	Upland CA	Klaus & Sons (self-install)	11/4/2009	-
19	Ojai CA	Alco Plumbing	11/12/2009	$1,052.50
20	Ojai CA	Alco Plumbing	11/12/2009	$1,052.50
21	Encinitas CA	Arthaus/Almendariz	11/8/2009	$530.00
22	Long Beach CA	The Green Plumber	6/11/2009	$1,500.00
23	Long Beach CA	Harding Construction	3/28/2010	$1,000.00
24	Santa Monica CA	ACME Environmental	4/14/2009	$2,500.00
25	Culver City CA	ACME Environmental	5/2/2009	-
26	Los Angeles CA	The Green Plumber	9/30/2009	$1,000.00
27	Capistrano Beach CA	Hogan Plumbing	1/5/2010	$750.00
28	Orange CA	Hogan Plumbing	12/10/2009	$750.00
29	San Clemente CA	Hogan Plumbing	12/15/2009	$750.00
30	Capistrano Beach CA	Hogan Plumbing	2/12/2010	$750.00
31	San Marcos CA	Son Energy	11/16/2009	-
32-71	HanfordCA	Wills Plumbing	3/11/2010	$51,000.00
72	Seaside CA	Applied Solar Energy	5/3/2010	$1,275.00
73	Monterey CA	Applied Solar Energy	5/5/2010	$1,275.00
74	Seaside CA	Applied Solar Energy	5/6/2010	$1,275.00
75	Monterey	Applied Solar Energy	5/6/2010	$1,275.00
76	Carmel Valley CA	Applied Solar Energy	5/7/2010	$1,275.00
77	Santa Cruz CA	California Radiant	5/7/2010	$1,275.00
78	Seaside CA	EcoTahoe	5/7/2010	$1,275.00
79	Greenfield CA	CHISPA/CCRB (Community Housing)	5/4/2010	$1,275.00
80	Salinas CA	Applied Solar Energy	5/11/2010	$1,275.00
TOTAL HOMEOWNER MATCH				$123,565.39

Performance Monitoring

In addition to contributing $50,000 toward general project expenses, the Office of Emerging Technologies of Southern California Gas Company (Sempra ET) also agreed to fund third-party performance monitoring of a select group of ICAT demonstration sites. Although Sempra ET initially agreed to provide $50,000 for monitoring, actual monitoring costs paid by Sempra exceeded $80,000. Sempra ET selected Information and Energy Services, Inc. (IES), a firm they had previously worked with for field testing, to conduct the SunCache monitoring. IES monitored six single family homes (SFHs) and two of three SunCache arrays at the Hanford multi-unit site. The largest two arrays were chosen, with 14 (Hanford 1295) and 15 (Hanford 1300) SunCache collectors in each. IES installed the monitoring equipment at all seven sites by mid-June 2010, but troubleshooting of the monitoring equipment on the Hanford 1300 system delayed data collection until mid-August. The SunCache collector at one of the SFH test sites (Claremont Foxpark) developed a leak soon after installation. Harpiris Energy delivered a replacement bladder (collector core) to the site in June, but the homeowner has not yet installed the replacement bladder; data for that site is not included in this report. Typical project field instrumentation is shown in Figure 9. For detailed information on the performance monitoring component of the SunCache ICAT project, including analysis of data from each site, refer to the IES Final Report contained in the Appendix.

Figure 9: SunCache ICAT Field Monitoring Equipment

Test Site Summary

Table 3 lists the sites selected for monitoring in the SunCache ICAT project, along with the measurement scheme (streamlined or detailed) being used at each site. One site of each type was selected for monitoring using a detailed scheme. When using a detailed measurement scheme the host site is instrumented with two (2) BTU meters: one dedicated to calculating the energy transfer by the SunCache unit to the water and a second BTU meter dedicated to calculating the energy transferred to the water in the gas fired heater. In addition, the detailed multi-family installation has a natural gas meter installed to directly measure gas consumption by the water heating system. When the streamlined measurement scheme is used, only one BTU meter is needed; it is installed in a way to measure the energy transfer to the water by the SunCache unit.

Table 3: Test Sites

#	City	Type	Number of Occupants	Measurement Scheme	Commissioning Date
1	Los Osos	Single Family Residence	4	Streamlined	5/27/10 11:00 AM
2	San Luis Obispo	Single Family Residence	2	Streamlined	5/27/10 3:30 PM
3	Claremont	Single Family Residence	2	Streamlined	6/2/10 2:00 PM
4	Claremont	Single Family Residence	3	Detailed	6/2/10 7:00 PM
5	Long Beach	Single Family Residence	2	Streamlined	6/10/10 11:30 AM
6	Los Angeles	Single Family Residence	3	Streamlined	6/14/10 11:00 AM
7	Hanford	Multi-Family Residence	Unknown	Detailed	8/18/10 4:00 PM
8	Hanford	Multi-Family Residence	Unknown	Streamlined	6/7/10 9:00 PM

Instrumentation

The monitoring equipment collects data in “real-time” and includes meters and sensors such as flow meters for the measurement of hot water flow, temperature sensors, BTU meters, gas meters, solar insolation and other digital or analog data collection equipment. The data recording interval is five minutes for each of the sensors, Table 4 lists the individual data streams that are recorded for the streamlined and detailed measurement schemes. In addition to the data points shown, the detailed measurement scheme at the multi-family test site also includes natural gas consumption data collection.

Table 4: Measurement Scheme Comparison

Detailed Measurement Scheme	Streamlined Measurement Scheme
SunCache Array BTU Meter Entering Water Temperature	SunCache Array BTU Meter Entering Water Temperature
SunCache Array BTU Meter Exiting Water Temperature	SunCache Array BTU Meter Exiting Water Temperature
SunCache Array BTU Meter Volume Flow Rate	SunCache Array BTU Meter Volume Flow Rate
SunCache Array BTU Meter Energy Rate	SunCache Array BTU Meter Energy Rate
SunCache Array BTU Meter Water Flow Total	SunCache Array BTU Meter Water Flow Total
SunCache Array BTU Meter Energy Total	SunCache Array BTU Meter Energy Total
Water Heater BTU Meter Entering Water Temperature	-
Water Heater BTU Meter Exiting Water Temperature	-
Water Heater BTU Meter Volume Flow Rate	-
Water Heater BTU Meter Energy Rate	-
Water Heater BTU Meter Water Flow Total	-
Water Heater BTU Meter Energy Total	-
Instantanious Outside Air Temperature	Instantanious Outside Air Temperature
5 min. Average Outside Air Temperature	5 min. Average Outside Air Temperature
5 min. Maximum Outside Air Temperature	5 min. Maximum Outside Air Temperature
5 min. Minimum Outside Air Temperature	5 min. Minimum Outside Air Temperature
Instantanious Solar Insolation	Instantanious Solar Insolation
5 min. Average Solar Insolation	5 min. Average Solar Insolation
5 min. Maximum Solar Insolation	5 min. Maximum Solar Insolation
5 min. Minimum Solar Insolation	5 min. Minimum Solar Insolation

* In addition, the detailed Multi-Family site will include natural gas consumption measurement.

Information from the various meters and sensors is brought back to a primary field mounted Data Acquisition Unit via a variety of hard wired digital signals – analog (0 to 10 volt or 4 to 20 ma) and Modbus RS-485 digital signals – or via a wireless RF signal or a combination of the two. Once the collected data is in the Data Acquisition Unit, it is sent back to a central database server via a cellular GSM connection.

The sensor data is logged continuously in intervals of 5 minutes, and the collected data is transferred to the IES data servers once per day, or potentially more often depending on cellular data transfer rates. Once the upload is complete the data can be viewed via any standard web

browser with a wide variety of possible queries. For additional analysis, data files can be downloaded from the IES website. For more information, please contact Mike Rogers at IES at mrogers@iesenergy.com. The report is also available at http://www.etcc-ca.com/. The typical IES data collection and storage approach for field testing is shown in Figure 10.

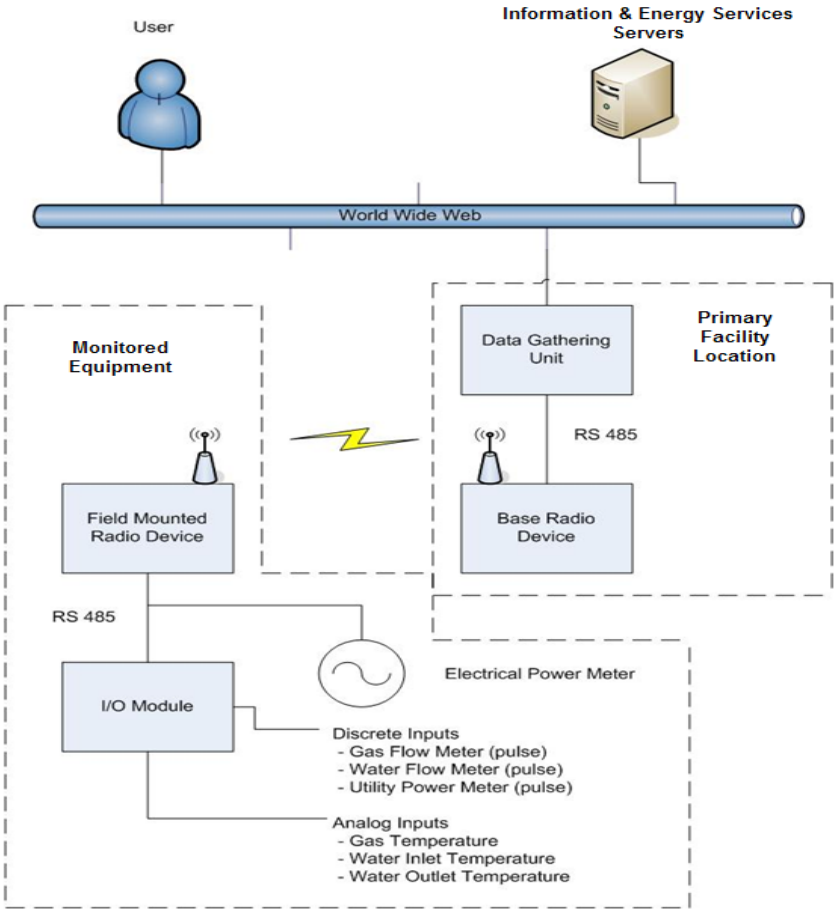

Figure 10: IES Data Collection Schematic

Manufacturer and model number for specific instrumentation is shown in Table 5.

Table 5: Instrumentation for SunCache Field Monitoring

Primary Data Acquisition Equipment List					
#	Device Name	Manufacturer / Model	Accuracy	Calibration	Description
1	BTU Meter	Badger / Series 380	3% of full scale 0.5% repeatability	By Manufacturer	Calculates and reports the BTU from the heating device. Also reports flow through system, and water temperatures.
2	*Water Flow Meter*	*Included with Badger 380 System*	*Included with Badger 380 System*	*By Manufacturer*	*Measures water flow through system*
3	*Input Water Temperature*	*Included with Badger 380 System*	*Included with Badger 380 System*	*By Manufacturer, IES will perform an ADDITIONAL 1 point calibration test*	*Measures the temperature of the water as it enters the heating device.*
4	*Output Water Temperature*	*Included with Badger 380 System*	*Included with Badger 380 System*	*By Manufacturer, IES will perform an ADDITIONAL 1 point calibration test*	*Measures the temperature of the water as it exits the heating device.*
5	Natural Gas Meter	American / AC-630	Proof = 100% +/- 1%	By Manufacturer	Measures the natural gas consumption by the Backup (traditional) water heating system. (Hanford Only)
6	Pyranometer	Licor / LI-200	better than 95% (error < 5%)	By Manufacturer	Provides the solar insolation in units of W/m^2. To be mounted with the solar collector on the roof of one building.
7	Temperature: OSA	Kele / ST-O91-XN2 & T91U transmitter	+/- 1° F	NIST traceable 2 point	Provides the local outside air temperature. To be mounted in an appropriate location on the north side of one of the buildings.
8	Data Acquisition Unit	Obvius / A8812-GSM	N/A	N/A	Collects and time stamps all data, the stores it locally as well as sending it to the IES server via a cellular GSM/GPRS connection.
9	ModHopper	Obvius / 9120-3 ER	N/A	N/A	Data input gateway that uses wireless mesh network technology to facilitate data transfer from remote sensors at one installation back to the data acquisition unit located at the second installation (2 units are needed for the Hanford sites).

Results and Discussion

At the conclusion of the ICAT project, IES had collected data from June 2010 through January 2011. Although a full-year's data would have been preferred, we are confident that the monthly averages presented here are valid estimates of annual SunCache performance. The data includes the entire second half of the solar year (6/21/10 Summer Solstice through 12/21/10 Winter Solstice), and then an additional five additional weeks of winter data. Furthermore, SWH savings are slightly higher during the first half of the solar year when colder groundwater results in greater total water heating loads.

When evaluating the performance of solar water heating systems, the key metric to determine is the reduction in backup fuel consumption, which in the case of all SunCache ICAT systems is natural gas. Once the backup fuel savings are calculated, determining emissions savings is straightforward using established conversion factors. Economic analyses, such as annual utility bill savings or simple payback, are somewhat more uncertain due to fuel pricing and incentives.

The BTU meters at each site calculated the energy flowing from the SunCache to the domestic hot water system. In order to determine the equivalent natural gas savings, it is necessary to quantify the efficiency of the backup water heater. This is because for every BTU of energy imparted by the backup water heater to the domestic hot water system, more than one BTU of natural gas is consumed due to storage losses and combustion inefficiency (stack losses). Water heaters are rated with an Energy Factor (EF), which represents the operating efficiency and accounts for both types of losses. The BTU meters measure delivered thermal energy; to determine the equivalent natural gas that would have been consumed by the backup water if it had delivered the same thermal energy, the following equation is used:

$$Equivalent\ Natural\ Gas\ Savings\ (BTU) = \frac{Energy\ Delivered\ by\ SunCache\ (BTU)}{Backup\ Water\ Heater\ Energy\ Factor}$$

Natural gas is more commonly denoted in Therms, which is converted using the following equation:

$$Natural\ Gas\ Savings\ (Therms) = \frac{Natural\ Gas\ Savings\ (BTU)}{100{,}000\,\frac{BTU}{Therm}}$$

Because the detailed monitoring scheme at the Hanford 1300 system included measurement of natural gas consumed by the backup water heaters, it was possible to determine the actual backup operating efficiency, which IES calculated at 0.53. Because the two Hanford systems use identical equipment, the same operating efficiency was used for the Hanford 1295 system.

Due to the high additional cost of monitoring water heater natural gas consumption, it was not possible to monitor backup natural gas consumption at any of the SFH sites – therefore it was necessary to estimate the EF of the SFH backup water heaters. Nearly all water heaters in use in California were installed since 1990, when it was mandated by the U.S. Department of Energy that all residential water heaters have a minimum EF of 0.525. Standards have risen gradually

since then, and current natural gas water storage water heaters have an EF rating of 0.58 to 0.61. However, as water heaters age their operating efficiency drops as scale builds up and the steel combustion chamber begins to corrode. For this reason, both DEG and IES used an EF of 0.50 when calculating backup fuel savings for the SFH sites. This is the estimated average EF for the entire population of existing water heaters in the Southern California study area.

The resulting monthly natural gas savings for the test sites is shown in Table 6.

Table 6: Monthly Natural Gas Savings by Site (therms)

Monthly Natural Gas Savings by Site (therms)										
Month	# days	Hanford 1300	Hanford 1295	Claremont	Los Osos	San Luis Obispo	Long Beach	Los Angeles	SF AVERAGE	MF AVERAGE
June-10	varies	n/a	101.7	2.6	2.3	2.2	2.2	3.9	***2.6***	***101.7***
July-10	31	n/a	127.4	2.9	1.9	2.0	2.5	5.5	***3.0***	***127.4***
August-10	31	38.3	142.4	1.9	2.2	1.7	3.3	6.2	***3.0***	***142.4***
September-10	30	88.3	106.3	2.2	1.5	1.8	3.5	1.7	***2.2***	***106.3***
October-10	31	52.4	74.4	1.2	0.7	1.2	3.0	2.4	***1.7***	***74.4***
November-10	30	26.7	32.1	0.8	4.1	0.9	3.8	1.3	***2.2***	***32.1***
December-10	31	9.0	11.9	0.8	2.5	0.5	4.0	0.5	***1.6***	***11.9***
January-11	31	4.4	6.9	0.9	5.4	1.6	4.4	1.9	***2.8***	***6.9***
		36.5	***75.4***	***1.7***	***2.6***	***1.5***	***3.3***	***2.9***	***2.4***	***75.4***

SWH performance is affected by many variables, such as local climate, collector pitch and orientation, and backup water heater setpoint. However, no variable has a larger impact than hot water consumption. Simply put, the more hot water that a site uses, the more it will benefit from a SWH system. Monthly hot water consumption for the test sites is shown in Table 7.

Table 7: Monthly Hot Water Usage by Site (gallons)

Monthly Hot Water Consumption by Site (gallons)									
Month	# days	Hanford 1300	Hanford 1295	Claremont	Los Osos	San Luis Obispo	Long Beach	Los Angeles	**AVERAGE**
June-10	varies	n/a	31388.1	727.6	815.8	1099.3	682.8	1117.1	**5,972**
July-10	31	n/a	33207.0	840.2	853.6	1091.0	908.1	1529.2	**6,405**
August-10	31	17079.0	40928.1	574.7	884.8	827.4	1037.6	1889.5	**9,032**
September-10	30	40062.0	37429.0	758.7	586.8	876.5	1126.9	724.1	**11,652**
October-10	31	39118.0	48366.0	836.3	700.4	1018.9	1092.9	1989.2	**13,303**
November-10	30	51353.0	54731.0	831.4	2746.4	935.3	1310.1	1707.4	**16,231**
December-10	31	52132.0	55150.0	947.1	2697.5	962.3	1479.2	1771.8	**16,449**
January-11	31	56634.0	69076.0	921.2	3076.1	1318.0	1541.2	2231.3	**19,257**
		42,730	**46,284**	**805**	**1,545**	**1,016**	**1,147**	**1,620**	**12,287**

Larger households tended to use more hot water, but per-capita hot water usage varied significantly. Almost as important as how much hot water is used, is when that usage occurs. As a passive system with its thermal storage located outside the building envelope (on the roof), SunCache performance suffers in households with substantial early-morning usage due to high nighttime losses. Usage profiles for the test sites are not included here, but can be found on pages 15, 21, 27, 33, 39, 44 and 50 of the IES Final Report contained in the Appendix of this report. (Note that page numbers restart in the IES report.) Per-capita natural gas savings for the SFH sites is shown in Table 8.

Table 8: Monthly Per-Capita Natural Gas Savings for SFH Sites (therms)

Monthly Natural Gas Savings per Person by Site (therms)							
Month	# days	Claremont	Los Osos	San Luis Obispo	Long Beach	Los Angeles	AVERAGE
How many Residents		3	4	2	2	3	2.8
June-10	varies	0.853	0.582	1.100	1.079	1.296	**0.982**
July-10	31	0.965	0.471	1.000	1.257	1.831	**1.105**
August-10	31	0.619	0.553	0.846	1.643	2.057	**1.143**
September-10	30	0.728	0.372	0.924	1.759	0.578	**0.872**
October-10	31	0.416	0.185	0.591	1.478	0.787	**0.692**
November-10	30	0.280	1.015	0.432	1.888	0.449	**0.813**
December-10	31	0.251	0.614	0.232	1.998	0.170	**0.653**
January-11	31	0.294	1.357	0.792	2.207	0.629	**1.056**
		0.551	**0.644**	**0.740**	**1.664**	**0.975**	**0.914**

Due to high turnover and transient occupancy, it was not possible to determine the number of occupants in the Hanford apartment facilities. However, we are certain that the Hanford 1300 system covers 66 bedrooms, while the Hanford 1295 system covers 60 bedrooms.

Table 9: Hanford Multi-Family Systems

System Name	Hanford 1300	Hanford 1295
# of Collectors in Array	15	14
# of Bedrooms	66	60
Estimated # of Occupants (@ 1.5 person/bedroom)	99	90
Average Monthly HW Usage	42,730 gallons	46,284 gallons
Per Capita Daily HW Usage	14.2 gallons	16.9 gallons
Total Monthly Natural Gas Savings	36.5 therms	75.4 therms
Per Capita Monthly Natural Gas Savings	0.369 therms	0.834 therms

Emissions savings were calculated using the natural gas savings shown in Table 6 and emission conversion factors provided by the ARB. To estimate greenhouse gas emission savings, we used the conversion of 53.072 kgCO2E/MMBtu, with the resulting emissions savings shown in Table 10.

Table 10: Greenhouse Gas Combustion Emissions by Site (pounds CO2 equivalent)

Monthly CO2e Reduction by Site (pounds)								
Month	# days	Hanford 1300	Hanford 1295	Claremont	Los Osos	San Luis Obispo	Long Beach	Los Angeles
June-10	varies	n/a	1190.2	30.0	27.2	25.7	25.2	45.5
July-10	31	n/a	1491.1	33.9	22.0	23.4	29.4	64.3
August-10	31	448.3	1665.8	21.7	25.9	19.8	38.4	72.2
September-10	30	1033.6	1243.8	25.5	17.4	21.6	41.2	20.3
October-10	31	613.5	871.0	14.6	8.7	13.8	34.6	27.6
November-10	30	312.3	375.5	9.8	47.5	10.1	44.2	15.7
December-10	31	105.3	139.6	8.8	28.7	5.4	46.7	6.0
January-11	31	52.0	81.0	10.3	63.5	18.5	51.6	22.1
AVERAGE		**687.4**		**28.0**				

Economic analyses of the test sites, as prepared by IES, are shown in Table 11. IES used a natural gas price of $1/therm, low by historical standards, but not far from current pricing.

Table 11: Economic Analyses of Test Sites

Unit Cost & Payback by Site (therms)							
Month	Multi Family Combined	Claremont	Los Osos	San Luis Obispo	Long Beach	Los Angeles	SF AVERAGE
Avg. Monthly Therms NG Saved	111.9	1.7	2.6	1.5	3.3	2.9	***2.4***
Estimated unit Cost		$ 1,800	$ 1,800	$ 1,800	$ 1,800	$ 1,800	***$ 1,800.00***
Estimated Installation Cost		$ 3,299	$ 1,653	$ 1,825	$ 1,500	$ 1,000	***$ 1,855.46***
Total Estimated Cost	$ 37,700	$ 5,099	$ 3,453	$ 3,625	$ 3,300	$ 2,800	***$ 3,655.46***
Annual Est. Therms NG Saved	1343	20	31	18	40	35	***28.7***
Annual Est. $ Saved	$ 1,345	$ 21	$ 32	$ 19	$ 41	$ 36	***30.0***
Simple Payback (years)	28.0	241.4	107.3	190.2	80.0	77.0	***139.2***

For Table 11, IES used the typical wholesale price of $1,800 charged by Harpiris Energy and the actual installation prices charged by contractors in the ICAT project. Current natural gas prices average about $1/therm, which are near historic lows when adjusted for inflation. The resulting payback periods are simply too long to be acceptable to most residential or commercial property owners. However, far shorter paybacks are within reach when federal and utility rebates are combined with higher assumed natural gas prices. In 2010 the California investor owned utilities (IOUs) established a rebate program for solar water heating systems, with rebates of $500 to $800 per SunCache collector installation. In addition, the remaining costs qualify for the 30% federal tax credit. In the case of the Long Beach site, with its competitive installation price, the final cost to the homeowner in a normal purchase would be $1,820 (assuming a $700 utility rebate). This SFH site also benefitted from good performance relative to the other sites, and if a more aggressive natural gas price of $2/therm is used, the simple payback drops to a somewhat more reasonable 23 years. SunCache systems are expected to last at least 20 years.

As a comparison, a typical 3 kW photovoltaic on a single family home cost about $7/watt, or about $21,000 before rebates. Currently, California IOUs are paying about $0.50/watt, plus the 30% federal tax credit, results in a final cost of about $5/watt, or $15,000. This system will generate about 4,500 kWh/year facing due South and with an 20° tilt, saving $1,125/year at $0.25/kWh. The resulting simple payback is 13 years even with federal and utility incentives.

The situation improves somewhat for the multi-family installation. The analysis of the combined performance of both Hanford sites is diminished due to the lack of data for the Hanford 1300 system for most of the summer, due to troubleshooting problems with the monitoring system. If the Hanford 1295 system is evaluated on an individual basis, and using a $700/collector rebate plus the 30% federal tax credit, the simple payback is reduced to just 7 years.

In all of the data presented in Table 6 through Table 11, there is little correlation between geography and performance. We believe that geography has only a secondary effect on SunCache performance, with less impact than overall hot water usage and the time of day when hot water draws typically occur. Hotter climates, such as Hanford in the Central Valley, also have warmer groundwater temperatures, so less total water heating is required.

Status of Technology and Conclusions

Unfortunately, SunCache production ceased shortly after the final ICAT systems were installed. Including the 80 ICAT units, Harpiris Energy produced and deployed more than 250 SunCache collectors between October 2008 and July 2010. Although the final outcome is disappointing to the project team, the ARB ICAT commitment to purchase 80 collectors was instrumental in the commercialization of this innovative technology and establishment of a cleantech manufacturing startup in California.

Several factors led to the suspension of efforts to produce and market the passive SunCache SWH system.

- Disappointing sales. Despite a three-person marketing effort that included participation in three major cleantech tradeshows and selection as a "Top-10 Green Building Product for 2008," SunCache sales never attained sufficient traction to be sustainable. The owner of the Hanford apartment property included in the ICAT program purchased 105 additional collectors for two apartment properties in Sacramento, but no other major sales occurred beyond shipments of 6 and 12 collectors to Antigua and Hawaii. (Systems also went to Arizona, Texas, Alabama, and Florida.) As a startup company, Harpiris Energy had limited resources and experience to devote to the SunCache effort, which came just as the economy went into recession.

- Low performance. Field testing of previous-generation SunCache prototypes at two households showed savings of 68 and 73 therms per year. Performance modeling by SRCC as part of the OG-300 certification process projected savings of 55-60 therms per year for an ideal collector installation with a household using 64.3 gallons per day.[4] The real-world savings experienced in the ICAT project are equivalent to just 18 to 40 therms per year.

- Strong competition. Passive technologies, and those made from polymer materials, threaten to disrupt the status quo of the crowded SWH collector industry. Customer interest is quite high, but active (pumped) systems using glycol loops and copper/glass/aluminum collectors have at least 75% of the SWH market in California. SunCache faced competition from domestic collector suppliers with strong distribution channels, well-funded European rivals seeking to break into the U.S., and Asian upstarts looking to leverage low manufacturing costs.[5]

[4] The six homes studied in the ICAT project used 26-53 gallons per day over the seven month monitoring period.

[5] This was a key factor in the decision at Harpiris Energy to end SunCache production in favor of a newly-developed solar storage tank. Sharing its basic configuration with the SunCache collector, this new tank faces fewer rivals and matches or exceeds their performance in all categories. Without the ultraviolet radiation faced by a collector, this plastic storage tank will have a 30-year lifetime.

- Production problems. The rotationally-molded panel at the heart of the SunCache collector uses a complex shape for structural strength and to support a planar copper heat exchanger that transfers heat to the potable hot water supply. Both the plastic panel and the copper heat exchangers would sometimes leak after manufacturing. The "ship-in-bottle" design meant that both would be useless if either component leaked after the panel was molded around the heat exchanger. After some early units shipped with particularly difficult-to-diagnose leaks and required field replacements, additional leak testing at the Harpiris factory was sufficient to catch any defective systems before shipping. Catching leaks at the factory is far less expensive than in the field, but the continued high scrap rate in the factory hurt margins.[6]

Although the SunCache program did not result in a successful product commercialization, several aspects of the project outcome are worth additional comments, hopefully to the benefit of future clean technology projects.

- The SunCache program is a good example of a public/private partnership. Davis Energy Group performed most of the technical and management work, as well as contributing about $500,000 to the effort from 1999-2011. Over the same period, the Department of Energy contributed about $1.6 million plus significant technical support through the National Renewable Energy Laboratory. Project oversight at DOE and NREL was effective yet flexible enough to respond to the uncertainties of product R&D. Private contractor DEG performed thousands of hours of design, fabrication, and testing at reasonable (and audited) rates, and ensured commercialization by securing appropriate intellectual property. Harpiris Energy provided the commercialization path and secured $165,000 of angel financing.

- Specific to the ICAT demonstration project, ARB funding of $235,000 was matched by a consortium of DEG ($50,000), Sempra Utilities ($130,000) and homeowners ($125,000).[7] 19 private contractors installed the 80 SunCache units in the ICAT project.

- The ICAT program fills a unique need by assisting pre-commercialized clean air technologies in California. Many federal and state programs offer support for basic research and product R&D in clean technology areas, and the investor-owned utilities use rebates to effectively foster demand for technologies that are already in widespread distribution. To our knowledge, the ICAT program is the only one in California to specifically target technologies that have shown promise through laboratory or "bench scale" prototyping and testing, but still need additional support to reach commercialization. This process is shown graphically in Figure 11. Spanning "The Chasm" (as it is referred to by Art Rosenfeld and others) is the greatest challenge for a successful product commercialization. Large firms have the resources to commercialize products themselves, but they generally prefer to develop incremental improvements in-house or to buy smaller firms once their technologies have already achieved market

[6] The new rotationally-molded Harpiris solar storage tank uses a much simpler design to eliminate the structural features required in the SunCache collector. In addition, the heat exchangers are now installed in the tank after molding, reducing scrap rate substantially and making possible field replacement of either the heat exchanger or vessel.

[7] Final match figures will not be known until all project activities are concluded.

traction. As a result, most technologies require investment from venture capitalists (VCs) for commercialization. VC funding is strongly affected by cyclical market conditions, and the VC industry is driven by internal trends. Cleantech was the leading VC trend in 2008, but has since become just another VC sector.

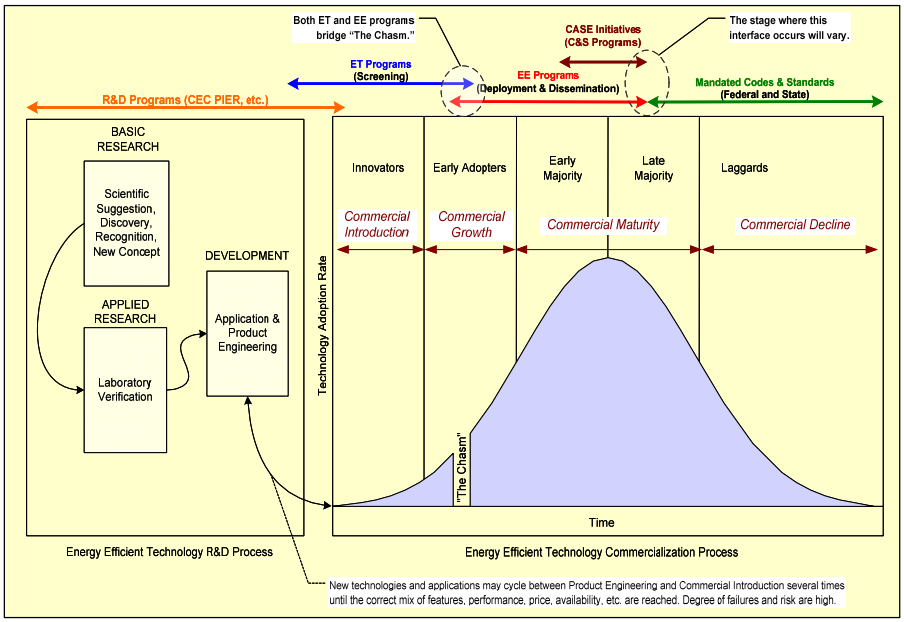

Figure 11: Chronology of Energy Efficient Product RD&D in California

Through its support of the commercialization of the SunCache technology and the establishment of Harpiris Energy, the ICAT project will continue to benefit California. Harpiris has just begun manufacturing a new solar storage tank. Intended for active (pumped) solar thermal systems, the tank represents a significant philosophical shift away from passive collectors and the high storage losses inherent in the rooftop storage. Both SunCache and the new Harpiris tank have at their core a rotationally molded vessel with an immersed metal heat exchanger, with the primary goal of reduced cost. But by moving the polymer materials to an indoor location, maximum temperature is controlled and ultraviolet radiation is eliminated. As a result, service life extends to 30 years, but at the same cost as the commodity glass-lined steel tanks that dominate the U.S. solar thermal market. Similar to an electric water heater, but twice as large and including a heat exchanger of some type, these tanks have an average service life of only 10 years.

Most importantly, the new tank already has substantial market traction with an order of 1,000 from UMA Solar, the largest solar thermal distributor in the U.S. UMA will lead the Harpiris tank marketing effort in the U.S. through their network of 500 dealers. Harpiris is seeking similar arrangements with distributors in export markets, with the first European deliveries planned for late 2011. Harpiris Energy delivered the first 20 tanks to UMA on March 17, 2011. The new Harpiris solar storage tank is shown in Figure 12.

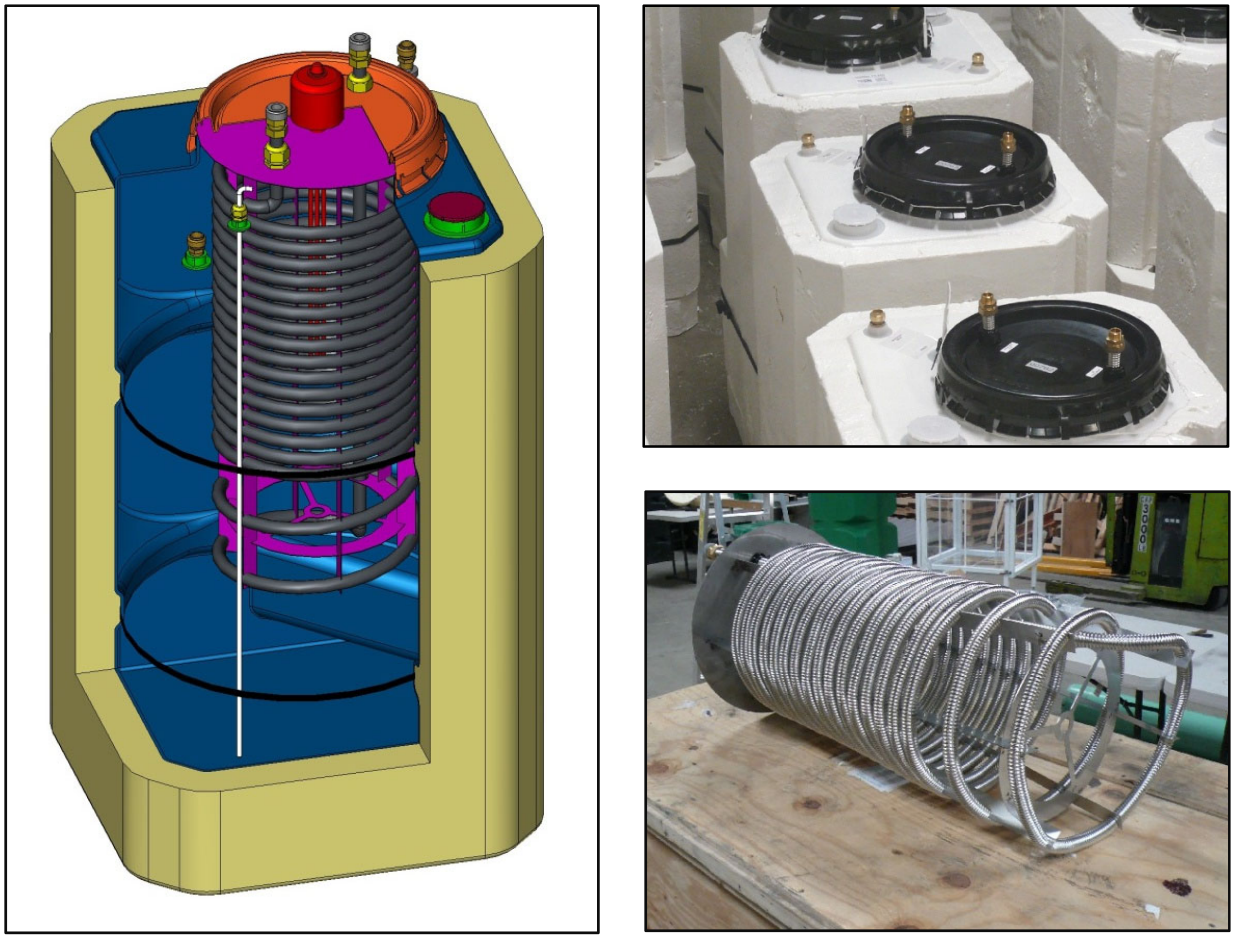

Figure 12: Harpiris TT-125 Solar Storage Tank

Appendix

The following documents are contained in the Appendix, in this order:

- Press release at project launch
- Flyer to recruit homeowners
- Installation contractor Memorandum Of Understanding
- SunCache ICAT Monitoring Report from Information & Energy Services, Inc.

PRESS RELEASE – For Immediate Release

Contact: Eric Lee, Harpiris Energy, 530-220-7000

California firms funded for solar water heating project; need sites in Southern California for free solar equipment

The California Air Resources Board (ARB) has awarded $235,000 to Davis Energy Group for an 80-unit demonstration project of the SunCache solar water heating system. As part of the ARB's Innovative Clean Air Technology (ICAT) program, this project will provide homeowners in Southern California with free SunCache systems and $500 toward installation costs.

SunCache is the result of a nine-year, $2 million R&D program by Davis Energy Group with support from the U.S. Department of Energy and administered by the National Renewable Energy Laboratory. Selected as one of BuildingGreen's 2008 Top-10Green Building Products by the editors of *Environmental Building News* and *GreenSpec®*,SunCache uses polymers extensively to reduce material costs and a streamlined installation process to reduce installation costs. It is the lowest priced residential-scale renewable energy system available in the U.S.

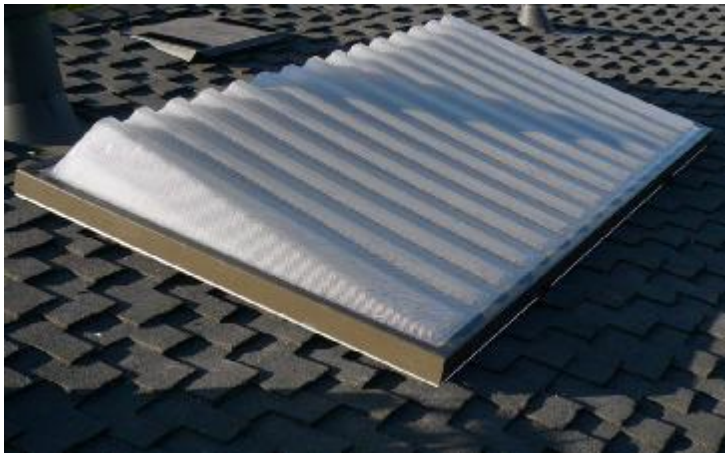

After securing an exclusive license from DEG to use the SunCache intellectual property (U.S. patent number 6,814,070), Harpiris Energy has begun manufacturing and marketing SunCache. Founded by DEG Senior Engineer Eric Lee, Harpiris Energy is dedicated to commercializing affordable renewable energy products.

Established in 1981, DEG has been on the cutting edge of energy efficiency and renewable energy. In addition to developing new products and technologies, DEG specializes in energy analysis and evaluation, design of energy efficient building systems, and energy standards development. DEG also manages the U.S. Green Building Council's LEED for Homes program in California and Nevada.

Eric Lee, Harpiris President and DEG Senior Engineer stated, "This funding will greatly increase the likelihood of commercial success for this California-made system. Widespread SunCache deployment will play a major part in helping California to reach its AB32 target of reducing CO_2 emissions to 1990 levels by 2020."

Qualifying sites must be customers of either Southern California Gas Company or San Diego Gas and Electric.

To learn more about SunCache or to sign up for the ARB/ICAT demonstration program, visit: www.harpiris.com

For more information on Davis Energy Group, visit:

www.davisenergy.com

DAVIS ENERGY GROUP
INCORPORATED

123 C Street • Davis, CA 95616 • Tel 530-753-1100 • Fax 530-753-4125

SunCache®

SOLAR WATER HEATING SYSTEM

ALL-IN-ONE PASSIVE PRE-HEATER

So-Cal HOMEOWNERS WANTED for demonstration project!

Receive **FREE** equipment and $500 toward installation!

80-UNIT DEMONSTRATION PROJECT

- Funded through an Innovative Clean Air Technology grant from the CA Air Resources Board
- Qualifying homeowners get free equipment and $500 toward installation and freight costs
- **To sign up, go to www.harpiris.com/learnmore/icatprogram.html**

REDUCE WATER HEATING COSTS BY 30%-50% save $150/year (gas water heater)

SRCC OG-300 AND FSEC CERTIFIED even with PEX pipe

2008 Top-10 Green Building Product GreenSpec® LISTED www.BuildingGreen.com

SunCache Solar Water Heating System

FAST AND EASY INSTALLATION

- Compatible with all water heater types and PEX or copper pipe

RELIABLE AND DURABLE

- 250 prototypes built and tested during 10-year DOE/NREL R&D program
- Simple passive design has no moving parts or electrical components
- Overbuilt flashing system eliminates roof leaks
- 2 year warranty (5 year against yellowing)
- Each system is leak tested three times during production
- 15-20 year system lifetime

Harpiris Energy

WWW.HARPIRIS.COM

SunCache
ICAT Demonstration Project

INSTALLATION FIRM MEMORANDUM OF UNDERSTANDING

Background
The California Air Resources Board (ARB), through its Innovative Clean Air Technology (ICAT) program, is sponsoring a demonstration project in Southern California to install 80 SunCache systems on residential sites. Davis Energy Group (DEG) developed the SunCache system with support from the Department of Energy and the National Renewable Energy Laboratory. Harpiris Energy (HE) has licensed the SunCache technology from DEG and is now manufacturing SunCache systems in Sacramento. DEG is administering the SunCache demonstration project.

Incentive
Participating homeowners will receive SunCache solar water heating (SWH) systems free-of-charge. Freight costs are not included. Homeowners should also be able to qualify for the IOU SWH rebates that begin 5/1/2010. SunCache meets all requirements of the rebate program for normal purchases and installations, but we cannot predict the Program Administrators reaction to the free aspect of this program.

Installation Firm Requirements
Installation firms shall provide DEG with evidence of a license from the State Contractor Board and liability insurance of at least $1 million. INSTALLERS SHOULD BE FAMILIAR WITH THE SUNCACHE INSTALLATION, OPERATION, AND MAINTENANCE MANUAL BEFORE SIGNING THIS MOU.

Site Requirements
With limited exceptions, sites must be customers of Southern California Gas Company or San Diego Gas and Electric Company. Sites must have a roof surface available for collector mounting that faces between Southeast and Southwest. There is no minimum number of occupants, but we reserve the right to disqualify sites with one or two occupants. BUILDING PERMITS ARE REQUIRED.

Other Site Issues
All water heater types qualify. For tankless water heaters, installers must explain tankless behavior with SWH systems. Hybrid plumbing systems with radiant heating are allowed but no technical support is offered. The standard SunCache installation is for composite asphalt shingle roofs. All roof types qualify, but it is the responsibility of the installer to assess and understand the collector mounting and water leak issues related to non-standard roof types. For tile, wood shake, and flat roofs, consult the SunCache manual. SunCache can be mounted on roofs up to 12-in-12 pitch. Even for flat roofs, the SunCache unit should be mounted flush to the roof surface. In general, we do NOT encourage rack mounting due to backside convective losses and potential for roof penetration leaks. Any rack must provide the panel with sufficient structural support to prevent any panel sag. We encourage installer feedback in this area.

Building Permits and Structural Engineering
Jurisdictions in California are generally positive about solar, but many will require some education to become comfortable with SWH. Installers are encouraged to recognize the long-term importance of developing a positive relationship with local Building Departments. This demonstration project provides an excellent opportunity to be compensated for the extra time required to familiarize a local jurisdiction with SunCache. The upfront effort in this project will make permits easier to obtain for future SunCache jobs. Plan checkers are generally accommodating to the plumbing aspects of passive SWH systems compared to active SWH systems with storage tanks and controls, especially given the kit-based nature of SunCache. However, they are more likely to be concerned about roof loading than with flat plate SWH collectors. SunCache has 16 PSF of roof loading, which is below the 20 PSF live load used for most roof designs. The HE website has a blanket structural report for 120 combinations of rafter size & spacing and roof type & pitch, and the results are shown on page 7 of the manual, which is devoted to structural specifications. Despite this, some plan checkers will require a site-specific structural report. In those cases, HE will refer a structural engineer to the installation firm. Each structural report will cost $300, unless drawings are required, which adds another $300.

Materials Not Included
The SunCache system kits include all equipment for one installation except: ¾" PEX pipe (non-vapor barrier type), ¾" or 1" thick foam pipe insulation, a thermostatic mixing valve (AKA tempering valve), and copper pipe and fittings as required for the pressure relief valve drain line and mixing valve connections. We can provide these at additional expense. In addition, installation requires templates and a few other specific tools. These templates and tools are supplied in an installation kit sold by HE for $300.

Installation Pricing
Final installation pricing will be determined by the installation firm. Installation firms are expected to offer fair and reasonable pricing for SunCache installations. Installation pricing should be based on materials plus actual time for installation, coordination, permitting. A reasonable materials markup is acceptable. Freight costs ($100-$200/unit) should be passed through to the homeowner. Savings will be about 80 therms/year, or $140/year.

Installation Contract
Homeowners shall sign contracts with the installation firm. No agreement shall exist between homeowner and either DEG or HE.

System Reservation
Systems will be assigned on a first-come, first-served basis. To reserve a system, installers shall provide copies installation contract and building permit application.

Warranty Claims
Installers shall warranty their installation work for a minimum of 12 months. Claims for replacement parts shall be handled by Harpiris Energy per the warranty in the SunCache manual. DEG shall not be liable for any warranty claims.

System Monitoring
10 to 20 of the 80 SunCache systems installed in this demonstration project will be monitored by a third-party. Installation firms are expected to cooperate with the monitoring firm. Installation firms shall be compensated for any fieldwork required for installation of monitoring equipment or data collection.

DAVIS ENERGY GROUP AND HARPIRIS ENERGY THANK YOU FOR YOUR PARTICIPATION IN THE SUNCACHE ICAT DEMONSTRATION PROJECT. We hope that you will find the SunCache system easy to market and install. We look forward to a cooperative and profitable relationship in the future.

Signed,

Davis Energy Group / Harpiris Energy	Name of Installation Firm
Signature	Signature
Eric Lee Printed Name	Printed Name
DEG Senior Engineer ICAT Project Coordinator Harpiris Energy President Title	Title
April 1, 2010 Date	Date

IES, Inc.

Information & Energy Services, Inc.

SunCache Demonstration Project – Final Report

Tuesday, March 01, 2011

Executive Summary

This report contains the results of a study on the efficacy of the SunCache solar collector in terms of its ability to offset natural gas consumption and greenhouse gas emissions. To assess its performance, a SunCache solar collector (or an array of collectors) was installed at two multi-family residential sites and six single-family residential sites. Using monitoring equipment, the following data was collected:

- The volume and temperature of the water flowing in and out of the SunCache solar collector;
- The volume and temperature of the water flowing in and out of the site's water heater(s) at two sites (one single-family and one multi-family);
- The natural gas consumption at one multi-family site;
- Outside air temperature; and
- Solar insolation.

This combination of data provides information about the energy savings that result from the use of SunCache solar collectors at residential sites. The data for this study was collected over a period of eight months from June 2010 to January 2011. Data collection is ongoing and will continue through May 2011.

At each residential site, the SunCache solar collector produced a net positive benefit for the building's owner. Specifically, the SunCache solar collector reduced natural gas consumption by an average of 2.5 therms per month at the single-family residential sites and 57.9 therms per month at the multi-family residential sites. At the detailed single-family site analysis shows that approximately 25% of the total domestic hot water heating load was satisfied by the SunCache collector with the remainder coming from the traditional storage tank style natural gas fired water heater.

The table below displays the net benefit or estimated reduction in natural gas consumption for each of this study's test sites.

Table A: Average Monthly Natural Gas Savings

Site	Avg. Monthly Natural Gas Offset
Detailed Multi-Family Site (Hanford)	39.4 therms
Streamlined Multi-Family Site (Hanford)	76.4 therms
Detailed Single-Family Site (Claremont)	1.7 therms
Streamlined Single-Family Site (Los Osos)	2.8 therms
Streamlined Single-Family Site (San Luis Obispo)	1.4 therms
Streamlined Single-Family Site (Long Beach)	3.4 therms
Streamlined Single-Family Site (Los Angeles)	3.3 therms
Streamlined Single-Family Site (Claremont)	No Data

The overall benefit of the SunCache solar collector is not constant over time. In the early morning hours (before 6:00AM), the SunCache solar collector has typically not had time to absorb enough solar energy to generate any positive benefit over the water heater alone. At the single-family residential sites, this time-based effect was minimized compared to the multi-family residential sites due to the very low water consumption in the early morning hours at single-family sites. However, after approximately 5:00-6:00AM (summer), the SunCache solar collector has a positive benefit in terms of

reducing natural gas consumption and therefore offsetting greenhouse emissions for each test site.

The effectiveness of the SunCache solar collector increases proportionately with the volume of its use: the more it's used, the more natural gas consumption is offset. The effectiveness of the SunCache solar collector is further increased by occupant using the hot water in the afternoon and evening hours. While occupant behavior was not explicitly part of this study, occupant behavior modification such as bathing at night vs. in the morning will certainly have an effect on overall water heating system performance. SunCache is more effective in the summer months due to longer daylight hours. In winter months the combination of shorter days and lower overnight temperatures reduce the performance of the SunCache collector.

From these results, it is logical to conclude that the SunCache provides a net benefit to building owners in terms of reducing natural gas consumption and offsetting greenhouse gas emissions. These benefits are seen across two types of residential sites (single- and multi-family) as well as throughout the daylight hours and in to the evening. When evaluating the cost of the SunCache unit, it appears that in single family applications, without a rebate, the payback periods are too long to make the unit a cost-effective option for most applications. Multi-family applications have better cost/benefit performance due to the reduced labor installation costs and higher gas savings potential.

Table of Contents

Executive Summary 2
Introduction 5
Scope of Monitoring Project 5
Interim Data Observations 5
Test Site Summary 8
Measurement & Verification Equipment 11
Detailed Findings 14
Hanford 1300 Building 14
Hanford 1295 Building 20
Claremont Brooks Street 26
Claremont Foxpark Street 32
Long Beach 32
Los Angeles 37
San Luis Obispo 43
Los Osos 48
Conclusions 54
Appendix One: Sensor Calibration Certificates 55
Appendix Two: Hanford 1300 Building 55
Appendix Three: Hanford 1295 Building 76
Appendix Four: Claremont Brooks St 92
Appendix Five: Claremont Foxpark St 107
Appendix Six: Long Beach 108
Appendix Seven: Los Angeles 124
Appendix Eight: San Luis Obispo 140
Appendix Nine: Los Osos 156

Introduction

Funded primarily through the Innovative Clean Air Technology (ICAT) program at the California Air Resources Board (ARB), the SunCache demonstration project installed approximately eighty (80) early-production SunCache solar water heating systems. Performance monitoring is being performed on six (6) residential sites and two (2) arrays of the Hanford Apartments multi-family location. Davis Energy Group is the prime contractor on the ICAT grant; SunCache systems are manufactured by Harpiris Energy. Southern California Gas and San Diego Gas & Electric (Sempra utilities) are providing additional support, coordinated through the Sempra Emerging Technology program. Information & Energy Services, Inc. (IES) has been hired by Sempra to coordinate and implement the monitoring component of the SunCache demonstration project.

Scope of Monitoring Project

This component of the SunCache ICAT project will evaluate in-situ performance of SunCache solar water heating systems in residential applications. Sites have been selected to provide a diverse mix of climates, usage profiles, and orientation. Both single family homes and multi-unit installations are being monitored.

<u>Number and Location of Selected Sites</u>
(6) Residential – Single Family Homes (selected from a list of installed sites)

(2) Multi-Family (both located at the Kings Garden Apartments in Hanford, CA.)

Interim Data Observations

After the first eight months of data collection certain trends have become evident:

- Use of SunCache is beneficial even in winter months.
- Use of SunCache is more beneficial in summer months than winter months
- Average monthly gas savings was approximately 2.4 therms at single family sites.
- Average monthly gas savings was approximately 75.4 therms at multifamily sites.
- Over the entire eight months the average monthly natural gas savings per gallon of hot water consumption was 0.002 therms.
- Over the entire eight months the average monthly natural gas savings per person was 0.914 therms at the single family residences. Occupancy data for multifamily sites was not available.
- Over the entire eight months the average monthly CO2e emissions have been reduced by 687.4 pounds at each multifamily site.
- Over the entire eight months the average monthly CO2e emissions have been reduced by 28.0 pounds at each single family site.

The next tables presented on the following page show the key parameters on a monthly basis. The month by month progression shows how seasonal changes affect the performance of the SunCache collector.

Table 1-1 below shows the monthly natural gas savings attributable to use of the SunCache collector at each site.

Table 1-1: Natural Gas Savings

Monthly Natural Gas Savings by Site (therms)										
Month	# days	Hanford 1300	Hanford 1295	Claremont	Los Osos	San Luis Obispo	Long Beach	Los Angeles	SF AVERAGE	MF AVERAGE
June-10	varies	n/a	101.7	2.6	2.3	2.2	2.2	3.9	***2.6***	***101.7***
July-10	31	n/a	127.4	2.9	1.9	2.0	2.5	5.5	***3.0***	***127.4***
August-10	31	38.3	142.4	1.9	2.2	1.7	3.3	6.2	***3.0***	***142.4***
September-10	30	88.3	106.3	2.2	1.5	1.8	3.5	1.7	***2.2***	***106.3***
October-10	31	52.4	74.4	1.2	0.7	1.2	3.0	2.4	***1.7***	***74.4***
November-10	30	26.7	32.1	0.8	4.1	0.9	3.8	1.3	***2.2***	***32.1***
December-10	31	9.0	11.9	0.8	2.5	0.5	4.0	0.5	***1.6***	***11.9***
January-11	31	4.4	6.9	0.9	5.4	1.6	4.4	1.9	***2.8***	***6.9***
		36.5	***75.4***	***1.7***	***2.6***	***1.5***	***3.3***	***2.9***	***2.4***	***75.4***

Please note that much more of the energy needs of the residence are satisfied by the SunCache collector in the first (summer) months. Table 1-2 below shows the monthly natural gas savings attributable to use of the SunCache collector at each site on a per gallon of hot water basis.

Table 1-2: Natural Gas Savings per Gallon

Monthly Natural Gas Savings per Gallon by Site (therms)									
Month	# days	Hanford 1300	Hanford 1295	Claremont	Los Osos	San Luis Obispo	Long Beach	Los Angeles	AVERAGE
June-10	varies	n/a	0.00324	0.00352	0.00285	0.00200	0.00316	0.00348	**0.00304**
July-10	31	n/a	0.00384	0.00345	0.00221	0.00183	0.00277	0.00359	**0.00295**
August-10	31	0.00224	0.00348	0.00323	0.00250	0.00204	0.00317	0.00327	**0.00285**
September-10	30	0.00221	0.00284	0.00288	0.00254	0.00211	0.00312	0.00240	**0.00258**
October-10	31	0.00134	0.00154	0.00149	0.00106	0.00116	0.00270	0.00119	**0.00150**
November-10	30	0.00052	0.00059	0.00101	0.00148	0.00092	0.00288	0.00079	**0.00117**
December-10	31	0.00017	0.00022	0.00079	0.00091	0.00048	0.00270	0.00029	**0.00079**
January-11	31	0.00008	0.00010	0.00096	0.00176	0.00120	0.00286	0.00085	**0.00112**
		0.0011	**0.0020**	**0.0022**	**0.0019**	**0.0015**	**0.0029**	**0.0020**	**0.0020**

What is interesting on Table 1-2 is how consistent the per gallon savings were between the different sites. In all cases the monthly savings were 0.002 therms per gallon of hot water used. Please note that Hanford 1300 is skewed low due to more data being from the cooler winter months (June & July data not complete). Table 1-3 on the following page shows the per person natural gas savings.

Table 1-3: Natural Gas Savings per Person

Monthly Natural Gas Savings per Person by Site (therms)							
Month	# days	Claremont	Los Osos	San Luis Obispo	Long Beach	Los Angeles	AVERAGE
How many Residents		3	4	2	2	3	2.8
June-10	varies	0.853	0.582	1.100	1.079	1.296	**0.982**
July-10	31	0.965	0.471	1.000	1.257	1.831	**1.105**
August-10	31	0.619	0.553	0.846	1.643	2.057	**1.143**
September-10	30	0.728	0.372	0.924	1.759	0.578	**0.872**
October-10	31	0.416	0.185	0.591	1.478	0.787	**0.692**
November-10	30	0.280	1.015	0.432	1.888	0.449	**0.813**
December-10	31	0.251	0.614	0.232	1.998	0.170	**0.653**
January-11	31	0.294	1.357	0.792	2.207	0.629	**1.056**
		0.551	**0.644**	**0.740**	**1.664**	**0.975**	**0.914**

The average monthly natural gas savings per person varies widely between the sites, while the savings per gallon remains comparatively stable. This indicates that human behavior has an effect on the actual performance of the SunCache, and in the case of the Long Beach site can mitigate the effects of the weather. Long Beach has consistently gotten high performance from their SunCache, and with increased hot water consumption the per-person performance has even improved in the winter months. Table 1-4 below shows the monthly hot water consumption figures for each of the sites.

Table 1-3: Domestic Hot Water Consumption

Monthly Hot Water Consumption by Site (gallons)									
Month	# days	Hanford 1300	Hanford 1295	Claremont	Los Osos	San Luis Obispo	Long Beach	Los Angeles	AVERAGE
June-10	varies	n/a	31388.1	727.6	815.8	1099.3	682.8	1117.1	**5,972**
July-10	31	n/a	33207.0	840.2	853.6	1091.0	908.1	1529.2	**6,405**
August-10	31	17079.0	40928.1	574.7	884.8	827.4	1037.6	1889.5	**9,032**
September-10	30	40062.0	37429.0	758.7	586.8	876.5	1126.9	724.1	**11,652**
October-10	31	39118.0	48366.0	836.3	700.4	1018.9	1092.9	1989.2	**13,303**
November-10	30	51353.0	54731.0	831.4	2746.4	935.3	1310.1	1707.4	**16,231**
December-10	31	52132.0	55150.0	947.1	2697.5	962.3	1479.2	1771.8	**16,449**
January-11	31	56634.0	69076.0	921.2	3076.1	1318.0	1541.2	2231.3	**19,257**
		42,730	**46,284**	**805**	**1,545**	**1,016**	**1,147**	**1,620**	**12,287**

Conditions have remained relatively stable with the exception of the Los Osos site. In November 2010, monthly hot water consumption more than tripled. Data was checked; however the most likely explanation is that the residents are actually using more hot water. Monthly CO2e emission reductions are shown for each site in Table 1-4 on the following page.

Table 1-4: CO2e Reduction by Month

Monthly CO2e Reduction by Site (pounds)								
Month	# days	Hanford 1300	Hanford 1295	Claremont	Los Osos	San Luis Obispo	Long Beach	Los Angeles
June-10	varies	n/a	1190.2	30.0	27.2	25.7	25.2	45.5
July-10	31	n/a	1491.1	33.9	22.0	23.4	29.4	64.3
August-10	31	448.3	1665.8	21.7	25.9	19.8	38.4	72.2
September-10	30	1033.6	1243.8	25.5	17.4	21.6	41.2	20.3
October-10	31	613.5	871.0	14.6	8.7	13.8	34.6	27.6
November-10	30	312.3	375.5	9.8	47.5	10.1	44.2	15.7
December-10	31	105.3	139.6	8.8	28.7	5.4	46.7	6.0
January-11	31	52.0	81.0	10.3	63.5	18.5	51.6	22.1
AVERAGE		**687.4**		**28.0**				

The CO2e emission reductions shown in Table 1-4 are calculated based on the natural gas savings and a factor of 53.072 kg/MMBtu of natural gas as provided by the California ARB for use in this study. Unit simple payback was evaluated for both the single family sites and as a group for the two multi-family sites. Please see Table 1-5 below for simple payback estimates based on the first six months of data.

Table 1-5: Unit Cost and Simple Payback

Unit Cost & Payback by Site (therms)							
Month	Multi Family Combined	Claremont	Los Osos	San Luis Obispo	Long Beach	Los Angeles	SF AVERAGE
Avg. Monthly Therms NG Saved	111.9	1.7	2.6	1.5	3.3	2.9	***2.4***
Estimated unit Cost		$ 1,800	$ 1,800	$ 1,800	$ 1,800	$ 1,800	***$ 1,800.00***
Estimated Installation Cost		$ 3,299	$ 1,653	$ 1,825	$ 1,500	$ 1,000	***$ 1,855.46***
Total Estimated Cost	$ 37,700	$ 5,099	$ 3,453	$ 3,625	$ 3,300	$ 2,800	***$ 3,655.46***
Annual Est. Therms NG Saved	1343	20	31	18	40	35	***28.7***
Annual Est. $ Saved	$ 1,345	$ 21	$ 32	$ 19	$ 41	$ 36	***30.0***
Simple Payback (years)	28.0	241.4	107.3	190.2	80.0	77.0	***139.2***

Based on the first six months of data, monthly average gas savings does not support the installation cost (mostly labor) of the SunCache unit for residential installations. The cost of the unit to contractors is $1800 per collector for single collector residential units. In the case of the multi-family (multiple collector) installations the cost per collector is slightly lower. The multi-family installation in this study used a total of 29 collectors. More detailed information on SunCache energy production, gas savings, hot water consumption, and emissions curtailment is presented on a site by site basis in the Detailed Initial Finding section of this report, and also in Appendix Two through Appendix Nine.

Test Site Summary

The site addresses are shown in Table 1-6 below, along with the measurement scheme (streamlined or detailed) being used at that site. One site of each type was selected to be measured using a detailed scheme. When using a detailed measurement scheme the host site is instrumented with two (2) BTU meters: one dedicated to calculating the energy transfer by the SunCache unit to the water and a second BTU meter dedicated to calculating the energy transferred to the water in the gas fired heater. In addition, the detailed multi-family installation has a natural gas meter installed to directly measure

gas consumption by the water heating system. When the streamlined measurement scheme is used, only one BTU meter is needed; it is installed in a way to measure the energy transfer to the water by the SunCache unit.

Table 1-6: Host Site List

#	City	Street	Type	Number of Occupants	Measurement Scheme	Commissioning Date
1	Los Osos	1336 14th St.	Single Family Residence	4	Streamlined	5/27/10 11:00 AM
2	San Luis Obispo	1229 Vista Del Lago	Single Family Residence	2	Streamlined	5/27/10 3:30 PM
3	Claremont	624 Foxpark Dr.	Single Family Residence	2	Streamlined	6/2/10 2:00 PM
4	Claremont	223 Brooks Ave.	Single Family Residence	3	Detailed	6/2/10 7:00 PM
5	Long Beach	4224 East Colorado St.	Single Family Residence	2	Streamlined	6/10/10 11:30 AM
6	Los Angeles	3524 Dahlia Ave.	Single Family Residence	3	Streamlined	6/14/10 11:00 AM
7	Hanford	1300 Fernot Way	Multi-Family Residence	Unknown	Detailed	8/18/10 4:00 PM
8	Hanford	1295 Fernot Way	Multi-Family Residence	Unknown	Streamlined	6/7/10 9:00 PM

Please see Figure 1-1 below for a map of southern California showing the location of each test site. The two multi-family sites in Hanford, CA are marked only once since they are so close to each other (northern most marker).

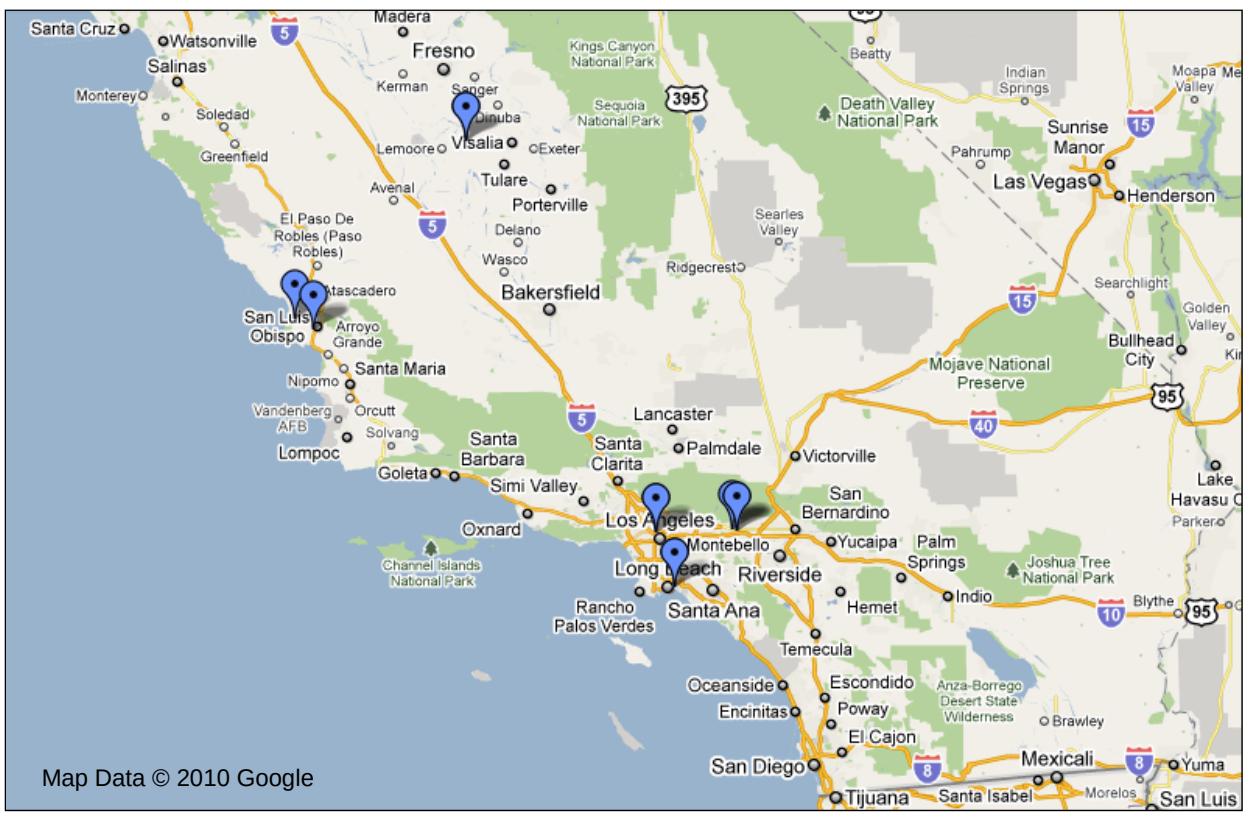

Figure 1-1: Area Map

The data recording interval is five minutes for each of the sensors, Table 1-7 below lists the individual data streams that are recorded for streamlined, and for detailed measurement schemes. In addition to the data points shown, the detailed measurement scheme at the multi-family test site also includes natural gas consumption data collection.

Table 1-7: Measurement Scheme Comparison

Detailed Measurement Scheme	Streamlined Measurement Scheme
SunCache Array BTU Meter Entering Water Temperature	SunCache Array BTU Meter Entering Water Temperature
SunCache Array BTU Meter Exiting Water Temperature	SunCache Array BTU Meter Exiting Water Temperature
SunCache Array BTU Meter Volume Flow Rate	SunCache Array BTU Meter Volume Flow Rate
SunCache Array BTU Meter Energy Rate	SunCache Array BTU Meter Energy Rate
SunCache Array BTU Meter Water Flow Total	SunCache Array BTU Meter Water Flow Total
SunCache Array BTU Meter Energy Total	SunCache Array BTU Meter Energy Total
Water Heater BTU Meter Entering Water Temperature	-
Water Heater BTU Meter Exiting Water Temperature	-
Water Heater BTU Meter Volume Flow Rate	-
Water Heater BTU Meter Energy Rate	-
Water Heater BTU Meter Water Flow Total	-
Water Heater BTU Meter Energy Total	-
Instantanious Outside Air Temperature	Instantanious Outside Air Temperature
5 min. Average Outside Air Temperature	5 min. Average Outside Air Temperature
5 min. Maximum Outside Air Temperature	5 min. Maximum Outside Air Temperature
5 min. Minimum Outside Air Temperature	5 min. Minimum Outside Air Temperature
Instantanious Solar Insolation	Instantanious Solar Insolation
5 min. Average Solar Insolation	5 min. Average Solar Insolation
5 min. Maximum Solar Insolation	5 min. Maximum Solar Insolation
5 min. Minimum Solar Insolation	5 min. Minimum Solar Insolation

* In addition, the detailed Multi-Family site will include natural gas consumption measurement.

All eight (8) installations have been completed with respect to monitoring equipment; all monitoring equipment is currently collecting data and communicating with the IES website.

Measurement & Verification Equipment

All sensors used in this study are new and have been factory calibrated, please see Appendix One for copies of calibration certificates for the various pieces of equipment. The sensors and data acquisition server (DAS) used in this study are detailed below. Please see Figure 1-2 below for a view of the DAS.

Figure 1-2: AcquiSuite Data Acquisition System

IES technicians installed an AcquiSuite™ A8812-GSM data acquisition unit manufactured by Obvius®. The AcquiSuite™ A8812-GSM has 8 flex IO inputs onboard to allow for the collection of any analog (4 to 20ma or 0 to 10V) as well as any digital (pulse output) signal. The AcquiSuite™ uploads data via a wireless internet connection on prescheduled intervals to the IES administered SQL database where the data is warehoused for future analysis. From the IES website the historical data can be viewed in various charts in addition to the ability to export data for use on a PC.

At all streamlined sites (see Table 1-2) one Badger model 380 BTU meter is installed. At detailed sites two Badger model 380 BTU meters are used. The model 380 BTU meter from Badger includes a paddle wheel type flowmeter and two temperature probes connected to the meter's onboard electronics which calculates and reports the elapsed energy transfer in units of BTU. Features of the model 380 include custom brass pipe tee holding the flowmeter, electronics, and one temperature probe for convenient installation, and Modbus RS-485 communications to easily connect to the AcquiSuite. Please see Figure 1-3 to the right for a view of the Badger model 380 BTU meter.

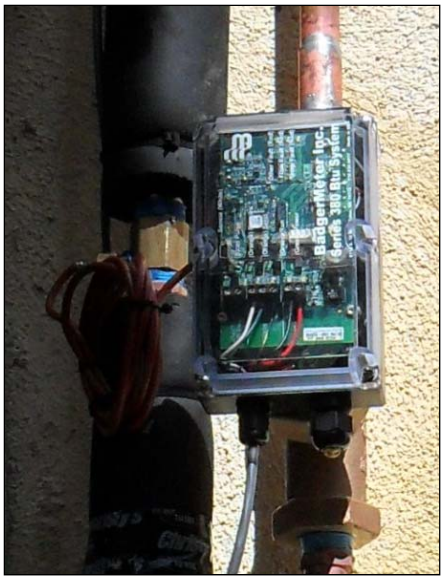

Figure 1-3: Badger 380 BTU Meter System

The dry bulb outside air temperature (OSA Temp.) data was collected at all sites using a NIST traceable calibrated temperature probe from KELE, model ST-O91-XN with a model T91U 4-20 mA analog transmitter board. A temperature sensor is shown in Figure 1-4 (below left), and the transmitter is shown in Figure 1-5 (below right).

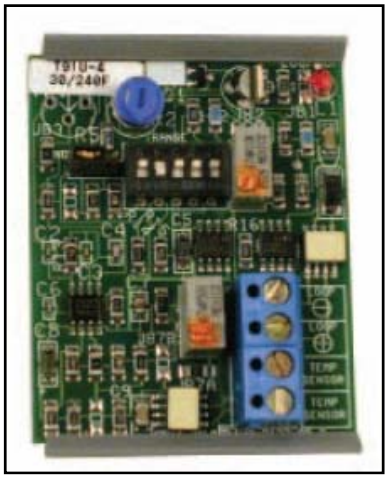

Figure 1-4: Air Temperature Sensor (left)

Figure 1-5: Temperature Sensor Transmitter (right)

At each site solar insolation was measured using a Licor model Li-200 pyranometer, which reports the amount of solar radiation incident on the SunCache collector at any given time, in units of watts per square meter. Please see Figure 1-6 on the following page, for a view of an installed Pyranometer.

Figure 1-6: Licor Li-200 Pyranometer

Natural gas consumption was only measured directly at the multi-family detailed test site. In this case a bellows type meter from American Meter was selected for accuracy. The model AC-360 was installed with a Rio-Tronics pulse output device to communicate with the AcquiSuite DAS. Please see Figure 1-7 below for a view of the meter installed to measure the natural gas consumption of the water heating appliances at the detailed multi-family residence test site.

Figure 1-7: American AC-360 Gas Meter

Detailed Findings

The energy, water temperature, and environmental conditions data from each site has been analyzed. Initial findings from each site are presented on the following pages, and are organized into sub-sections based on site.

Hanford 1300 Building

This is the detailed multi-family residential site. The two BTU meters installed on the domestic water heating system at the 1300 building are plumbed in such a way that one meter measures the flow of make-up water through the SunCache array, and the other meter measures both the make-up water as well as the return water from the building loop. Please see Figure 2-1 below for a line diagram showing the meter placement and the building's hot water plumbing. Please note that this is a recirculation type DHW system; the building loop is not explicitly shown in the figure.

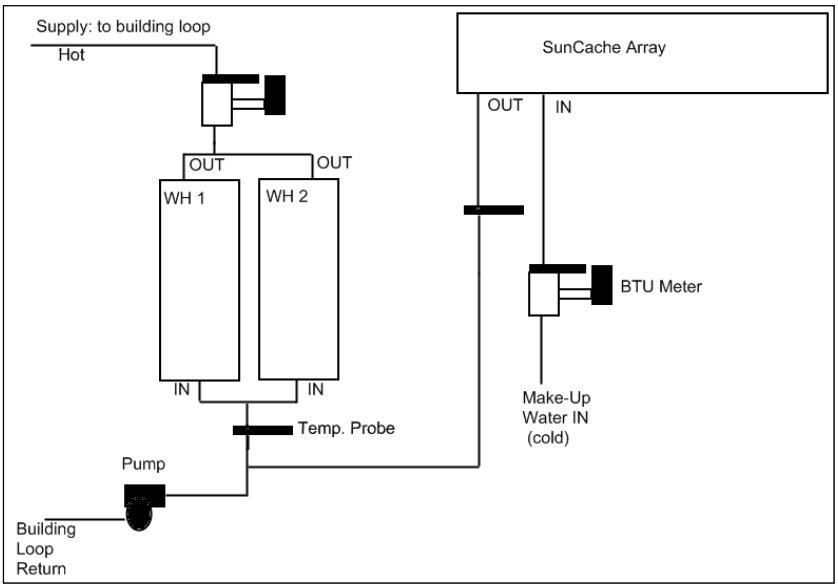

Figure 2-1: Hanford 1300 Building Plumbing Diagram

Please see Table 2-1, below for a monthly summary of the natural gas savings, hot water consumption, and energy transfer in both the SunCache and gas fired water heaters. Please note that only the makeup water flows through the SunCache array. Both the pre-heated makeup water from the SunCache and the building loop return water are fed through the natural gas water heaters.

Table 2-1: SunCache Parameters by Month

Hanford 1300 Bldg						
	Days	Gallons SunCache	Therms Gas Saved	BTU SunCache	Gallons Water Heaters	BTU Water Heater
June						
July						
August	13	17,079	38	2,037,200	135,828	15,582,000
September	31	40,062	88	4,700,100	317,960	38,977,700
October	31	39,118	52	2,795,200	314,435	46,743,978
November	30	51,353	27	1,437,600	321,610	60,957,130
December	31	52,132	9	478,600	325,540	74,577,730
January	31	56,634	4	243,700	341,810	83,554,600
TOTALS	**167**	**256,378**	**219**	**11,692,400**	**1,757,183**	**320,393,138**
Avg. Monthly Therms saved			**39.4**			
Avg. Monthly Therms saved per Gal			**0.00086**			

The makeup water consumption figure is measured directly by the BTU meter. Total elapsed BTU is calculated onboard the BTU meter. To convert from BTU to therms we use the conversion factor of 100,000 BTU per therm. To calculate the natural gas saved we apply an Energy Factor to the elapsed therms figure. The Energy Factor represents the efficiency of the water heater, in this case we use an Energy Factor of 53% based on measurements taken using the other BTU meter and the natural gas meter. Please see Figures 2-2 and 2-3, on the following page for graphs of a typical summer month's water consumption (makeup water) and useful energy transfer in the SunCache solar array respectively.

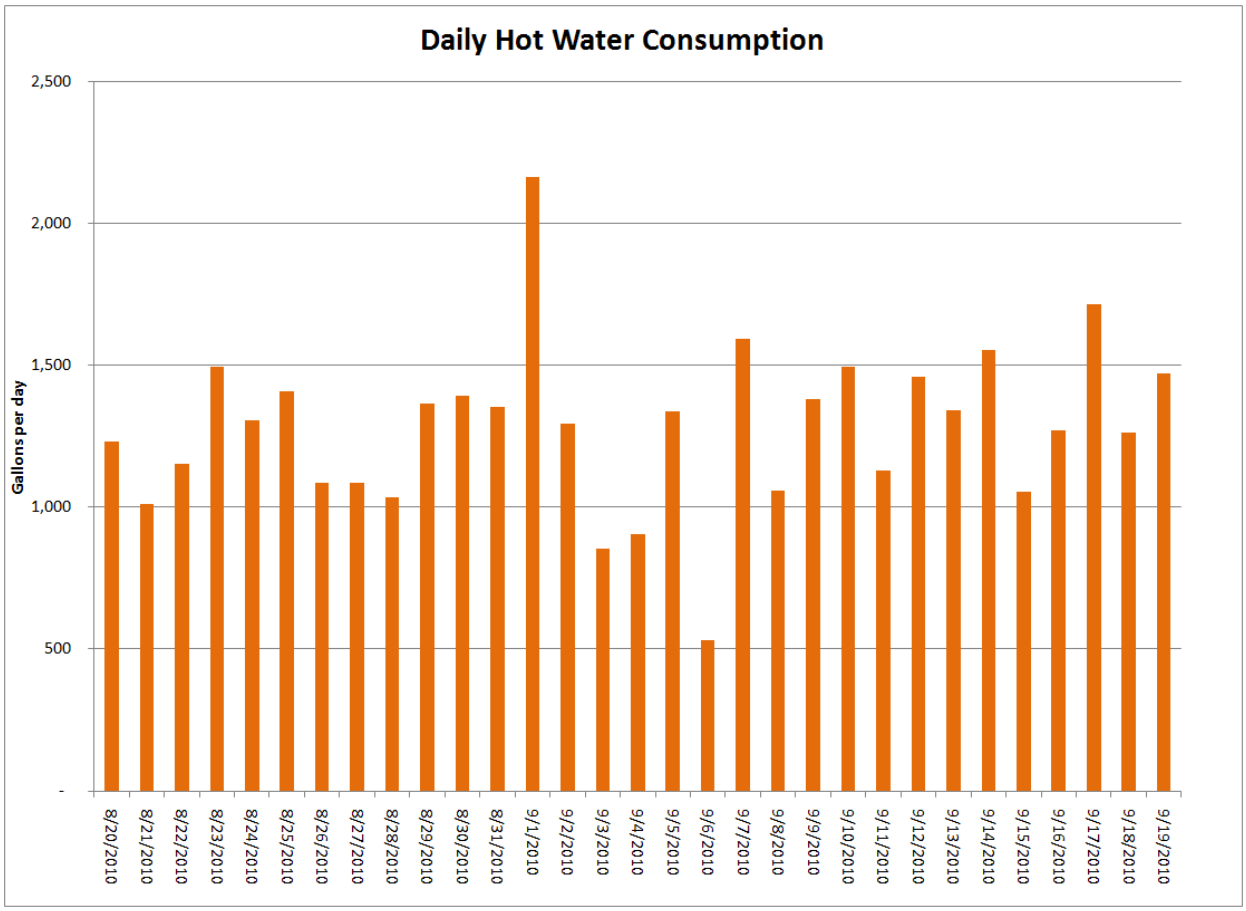

Figure 2-2: Hanford 1300 Bldg – Daily Domestic Hot Water Consumption

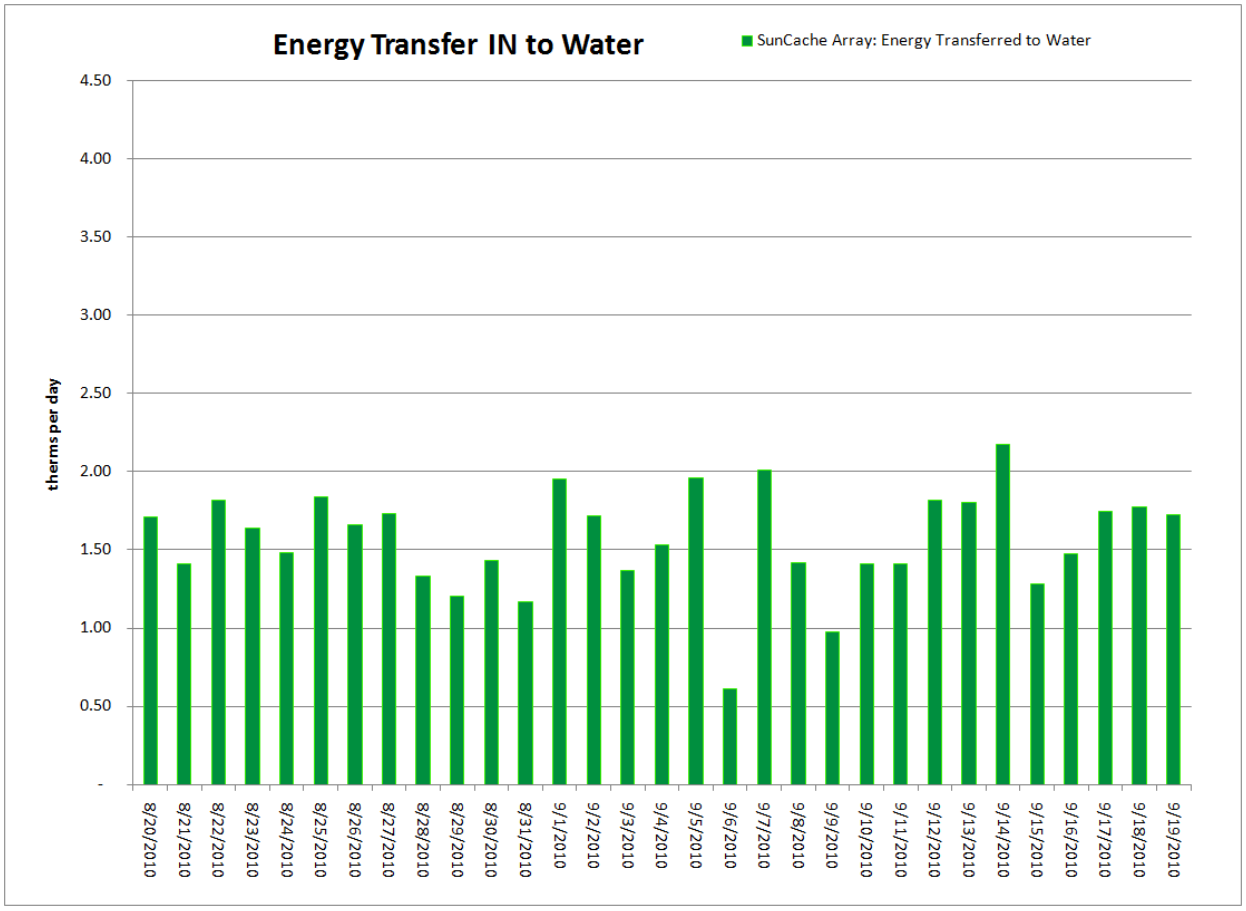

Figure 2-3: Hanford 1300 Bldg – Daily Energy Transfer into Water via SunCache Panel

When comparing hot water consumption to energy transfer, there are some obvious similarities, but the two graphs are not identical. To explain why, it helps to consider the time of day that the water consumption occurred: water consumed early in the morning exits the SunCache at a colder temperature and therefore has not increased in energy compared to the water entering the building. Water drawn later in the day, after the SunCache has been warmed in the sun, exits the solar array at a higher temperature than the water entering the building; and therefore has offset some of the energy that would have been used by the natural gas water heater to heat the makeup water to the desired set-point. Interesting statistics on water use and time of day are shown in Table 2-2 below. Energy transfer and time of day are covered in Table 2-3 below.

Table 2-2: Hanford 1300 Bldg – Water Consumption & Time of Day (below left)

Table 2-3: Hanford 1300 Bldg – SunCache Energy Transfer & Time of Day (below right)

Monthly % of Makeup Hot Water Consumption	
Midnight - 6:00AM	17%
6:00AM - Noon	34%
Noon - 6:00PM	24%
6:00PM - Midnight	25%

Monthly % of Suncache Energy Transfer	
Midnight - 6:00AM	14%
6:00AM - Noon	33%
Noon - 6:00PM	33%
6:00PM - Midnight	20%

Please keep in mind that the above statistics only refer to the makeup water. Both the building loop return and the makeup water were put through the water heaters. Only makeup water was pre-heated in the SunCache array. The elapsed BTU of heat transferred from the water heaters to the water is measured by a dedicated BTU meter.

To convert from BTU to therms we use the conversion factor of 100,000 BTU per therm. Using the natural gas meter shown in Figure 1-7 we measure the volume of natural gas consumed by the two condensing water heaters in cubic feet. Each time that an additional two cubic feet of gas has been consumed an electric "pulse" is sent to the DAS, which records the additional gas consumed and the time. To convert this volumetric measurement to BTU we use a higher heating value (HHV) of 1,030 BTU per cubic foot of gas. This allows the water heater efficiency to be calculated, as: "Work Out" divided by "Work In".

Any energy transfer that takes place in the SunCache array to pre-heat the makeup water is considered a positive situation for the building operator. Please see Figures 2-4 through 2-6 below and on the following page for a graph of a typical week of temperature data from the Hanford 1300 Building test site in the summer, fall, and winter seasons respectively. Water flow data is included to illustrate when water is moving vs. stagnant water in the pipes.

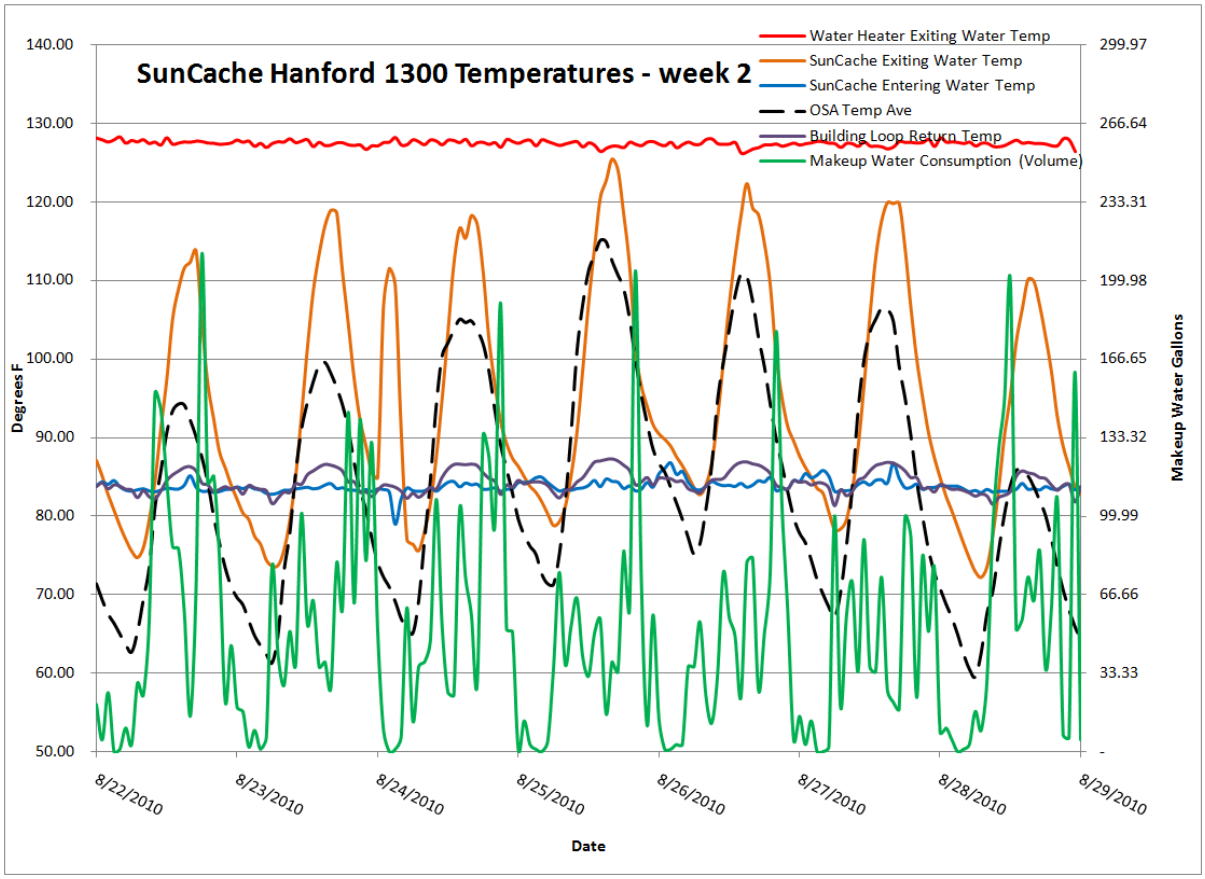

Figure 2-4: Hanford 1300 Bldg – Temperatures & Flow for Typical Summer Week

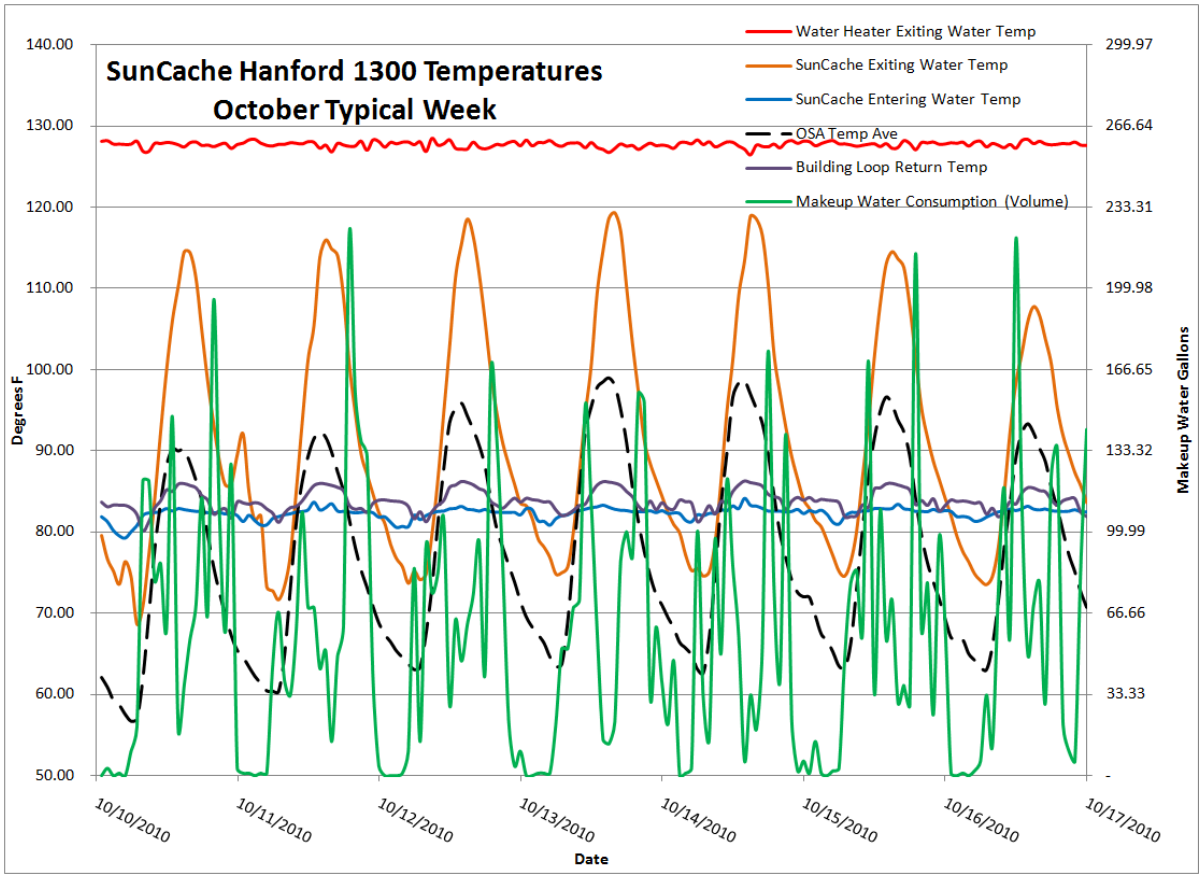

Figure 2-5: Hanford 1300 Bldg – Temperatures & Flow for Typical Fall Week

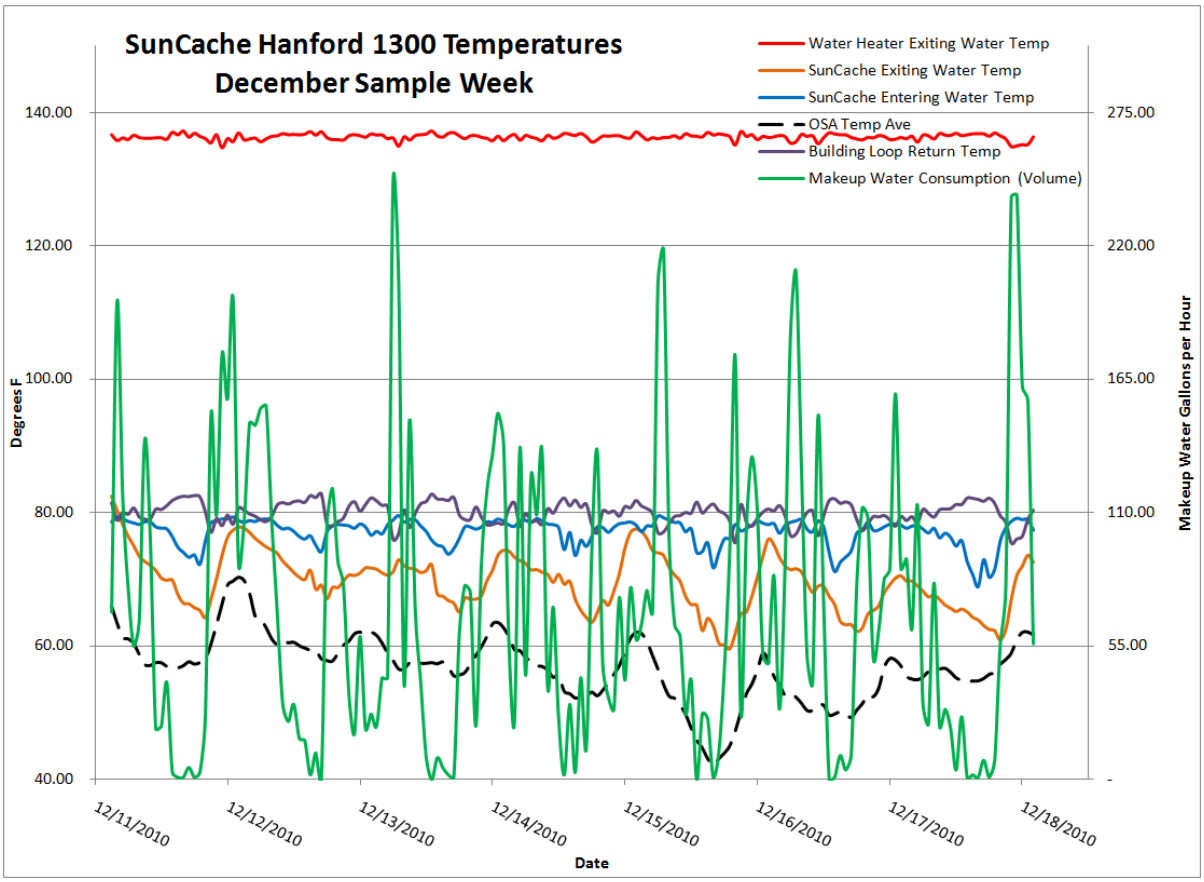

Figure 2-6: Hanford 1300 Bldg – Temperatures & Flow for Typical Winter Week

When referring to the figures above, please note that the peaks in the green line indicate instances of hot water consumption by the residents. In the summer and fall graphs we note that at each instance of water consumption the orange line is higher than the blue line except for a brief period in the morning, indicating a net positive energy transfer and therefore a benefit to the building operator. By contrast in the winter graph we note that the SunCache exit temperature struggles to make any gain over the intake temperature and for the most part is colder. The figures above show that in the summer and fall the SunCache delta T, or increase in water temperature inside the SunCache array is positive. As demonstrated by the green line, since this is a multi-family residence someone is using hot water at almost all times, with increased consumption during morning and evening hours. During times of maximum water consumption we note that the temperature increase in the SunCache array at the 1300 building can be up to 35 degrees above the temperature of the water line entering the water heater room. This is a significant temperature increase.

Natural gas savings are calculated by applying an Energy Factor to the elapsed therms totals from the SunCache collector. The Energy Factor represents the efficiency of a water heater; in this case we use an Energy Factor of 53% based on measurements taken using the water heater's BTU meter and the natural gas meter averaged over a 30 day period. This 53% figure was relatively consistent month to month. Combustion of natural gas releases certain emissions (greenhouse gasses), by offsetting a portion of the natural gas that would have been used for domestic water heating, the SunCache device causes greenhouse gas emissions to be offset. Daily and monthly reductions in selected greenhouse gas emissions over the entire test period are presented in the Appendix. Outside air temperature and solar insolation data is also being collected as part of the study. Results are presented in MS Excel Format.

Emissions of CO, NOx, SOx, TOG, and PM are being tracked, as well as Carbon Dioxide Equivalent (CO_2e). All emissions are being reported in pounds, and are calculated as direct combustion emissions only, no direct fugitive emissions from the pipeline network are included in these calculations. Emission factors are based on the US EPA's AP-42, they are as follows (in units of pounds per million cubic feet of natural gas consumed): Carbon Monoxide – 40, NOx – 94, SOx – 0.6, TOG – 11, PM – 7.6 with an emission factor of 53.072 kg/MMBtu for Carbon Dioxide Equivalent as provided by the California ARB for this purpose.

At the Hanford 1300 Building test site several parameters were measured, including SunCache solar collector entrance and exiting water temperatures as well as hot water consumption (makeup water). One BTU meter is used to integrate these sensors and perform calculations to directly report energy transfer to the water in the SunCache array. A second BTU meter is used to measure heat transfer to the water in the pair of condensing water heaters. A natural gas meter is used to take volumetric measurements of the gas consumption by the water heaters. Based on the measured data, over the test period from 8/18/2010 to 1/31/2011 we can conclude that there has been a net energy savings from the use of a SunCache solar collector at this location. Using an energy factor of approximately 53% (varies based on actual monthly average efficiency) to represent the efficiency of the water heating appliance this test site would see a natural gas savings of 219 therms over the test period of 167 days. The summer and fall results are consistent with those found at the other multi-family test site, although slightly lower.

Hanford 1295 Building

This is the streamlined multi-family residential site. The single BTU meter is installed on the domestic water heating system in such a way that it measures the flow of make-up water through the SunCache array. Please see Figure 3-1 below for a line diagram showing the meter placement and the building's hot water plumbing. Please note that this is a recirculation type DHW system; the building loop is not explicitly shown in the figure

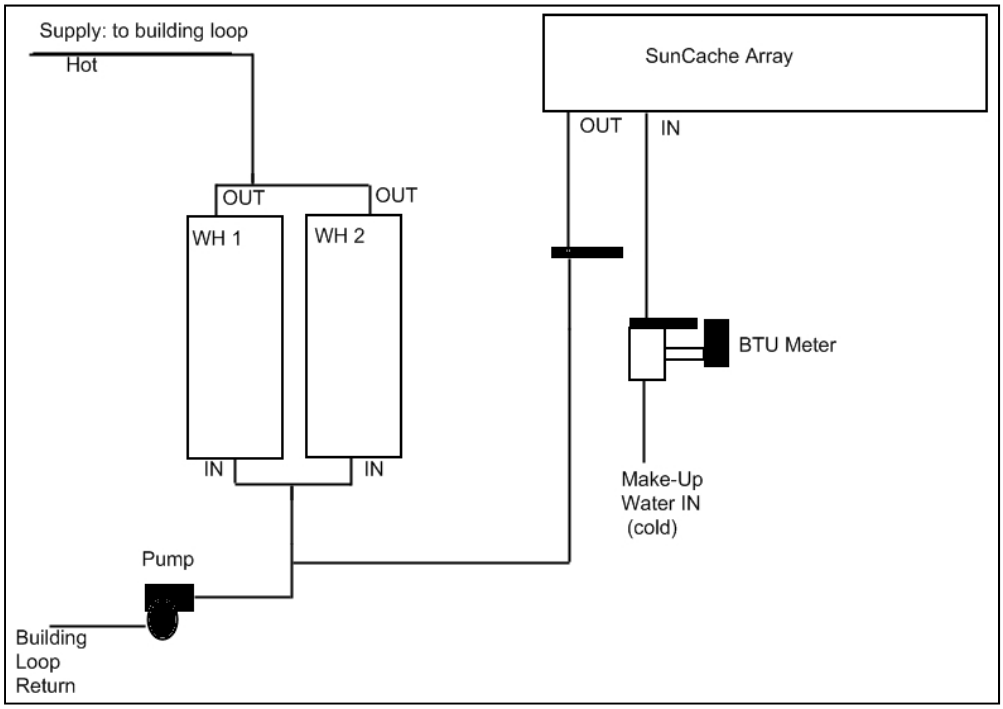

Figure 3-1: Hanford 1295 Bldg – Plumbing Diagram

Please see Table 3-1, below for a monthly summary of the natural gas savings, hot water consumption, and energy transfer in both the SunCache and gas fired water heaters. Please note that only the makeup water flows through the SunCache array. Both the pre-heated makeup water from the SunCache and the building loop return water are fed through the natural gas water heaters.

Table 3-1: SunCache Parameters by Month

Hanford 1295 Bldg			
	Days	Gallons	Therms Gas Saved
June	22	31,388	102
July	31	33,207	127
August	31	40,928	142
September	30	37,429	106
October	31	48,366	74
November	30	54,731	32
December	31	55,150	12
January	31	69,076	7
TOTALS	**237**	**370,275**	**603**
Avg. Monthly Therms saved			**76.4**
Avg. Monthly Therms saved per Gal			**0.00163**

The makeup water consumption figure is measured directly by the BTU meter. Total elapsed BTU is calculated onboard the BTU meter. To convert from BTU to therms we use the conversion factor of 100,000 BTU per therm. To calculate the natural gas saved we apply an Energy Factor to the elapsed therms figure. The Energy Factor represents the efficiency of a typical water heater; in this case we use an Energy Factor of 53% to match the equipment in the 1300 Bldg, which is identical. In order to calculate the volume of the natural gas offset we use an average higher heating value (HHV) of 1030 BTU per cubic foot. Please see Figures 3-2 and 3-3, below and on the following page for graphs of a typical month's water consumption and useful energy transfer in the SunCache solar collector respectively.

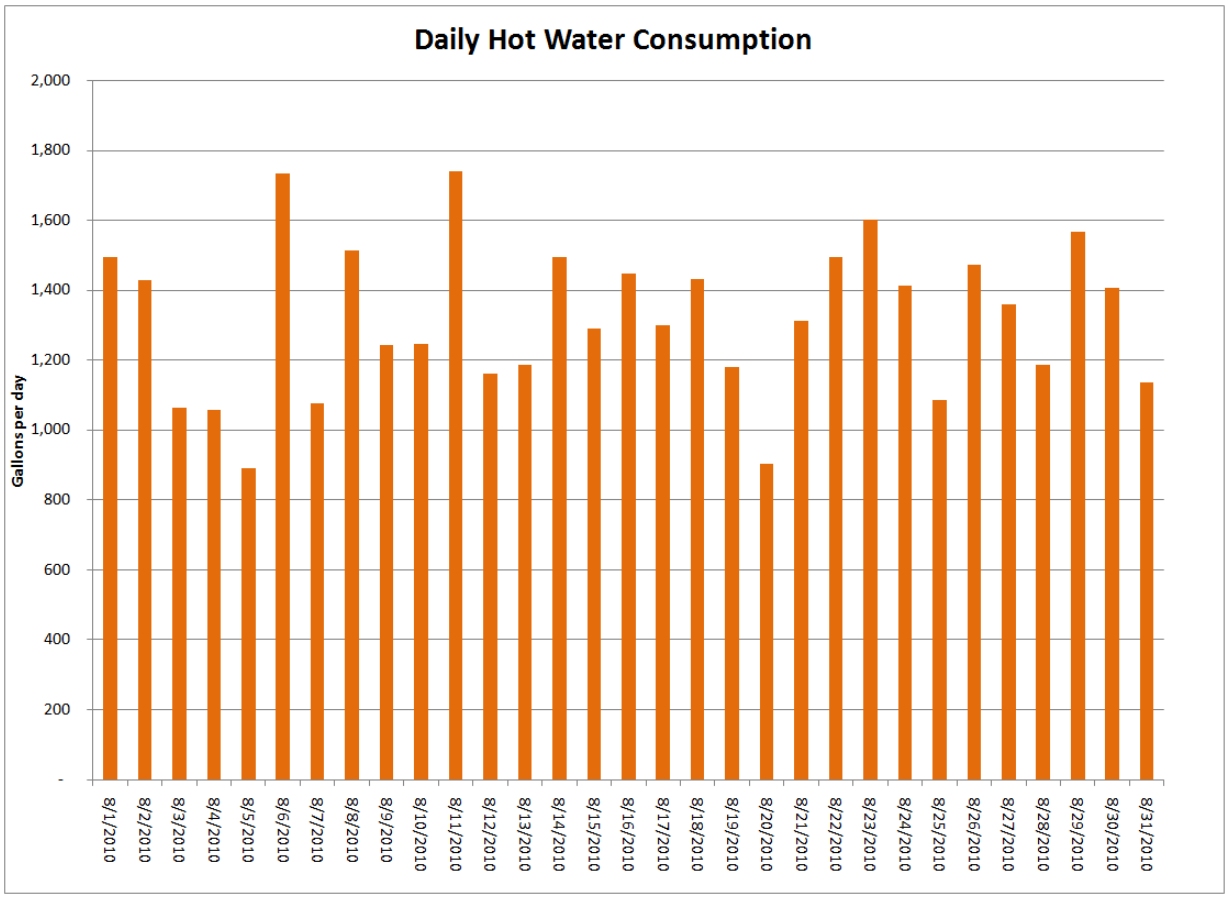

Figure 3-2: Hanford 1295 Bldg – Daily Domestic Hot Water Consumption

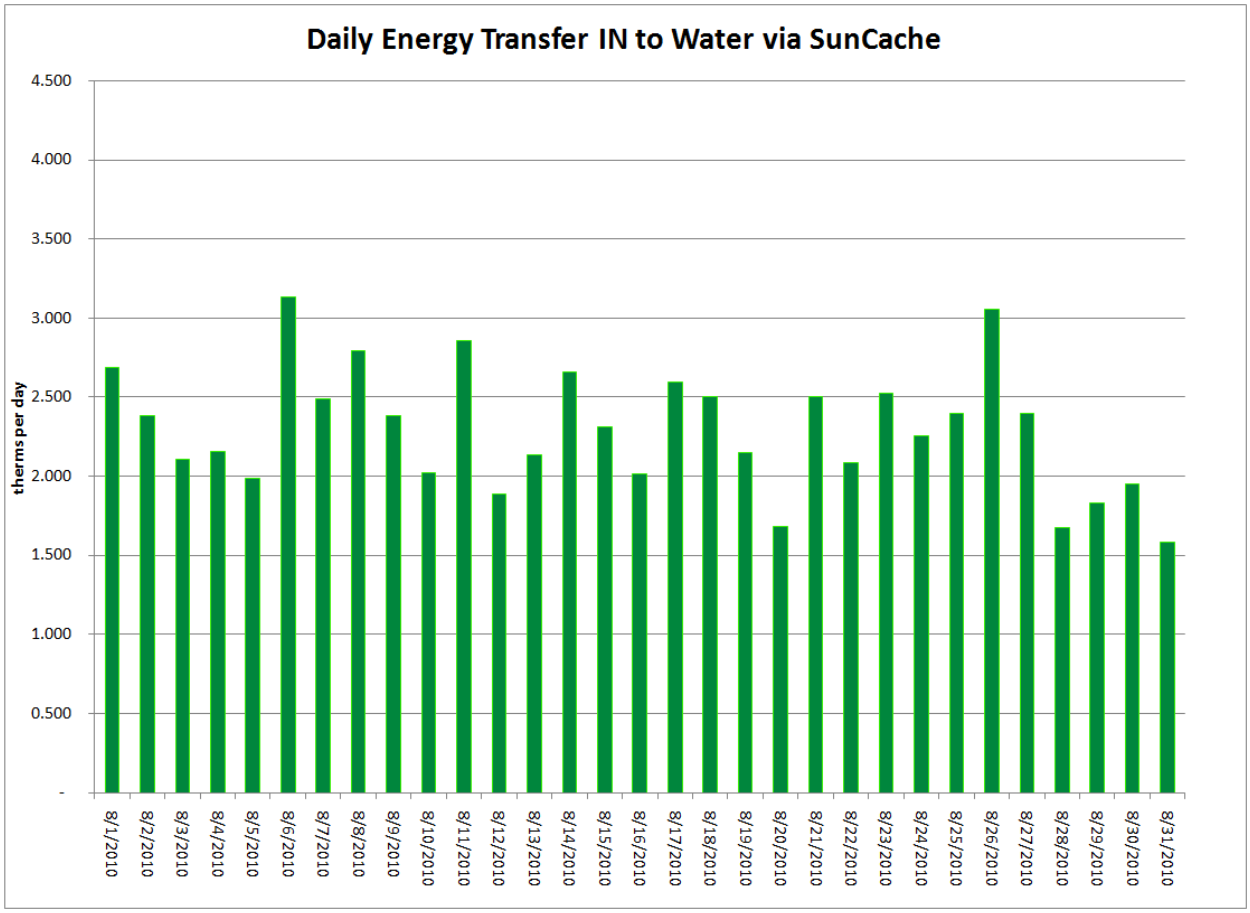

Figure 3-3: Hanford 1295 Bldg – Daily Energy Transfer into Water via SunCache Panel

When comparing hot water consumption to energy transfer, there are some obvious similarities, but the two graphs are not identical. To explain why, it helps to consider the time of day that the water consumption occurred: water consumed early in the morning exits the SunCache at a colder temperature and therefore has not increased in energy compared to the water entering the building. Water drawn later in the day, after the SunCache has been warmed in the sun, exits the solar collector at a higher temperature than the water entering the building; and therefore has offset some of the energy that would have been used by the natural gas water heater to heat the water to the desired set-point. Interesting statistics on water use and time of day are shown in Table 3-2 below. Energy transfer and time of day are covered in Table 3-3 below. Please note that ONLY the makeup water flows through the SunCache, while cooler building loop return water is being mixed with the pre-heated SunCache output before being re-heated in the natural gas water heaters.

Table 3-2: Hanford 1295 Bldg – Water Consumption & Time of Day (below left)

Table 3-3: Hanford 1295 Bldg – SunCache Energy Transfer & Time of Day (below right)

Monthly % of Makeup Hot Water Consumption	
Midnight - 6:00AM	9%
6:00AM - Noon	18%
Noon - 6:00PM	31%
6:00PM - Midnight	42%

Monthly % of Suncache Energy Transfer to Water	
Midnight - 6:00AM	2%
6:00AM - Noon	4%
Noon - 6:00PM	52%
6:00PM - Midnight	42%

Any energy transfer that takes place in the SunCache array to pre-heat the makeup water is considered a positive situation for the building operator. Please see Figures 3-4 through 3-6 below and on the following page for a graph of a typical week of temperature data from the Hanford 1295 Building test site in the summer, fall, and winter seasons respectively. Water flow data is included to illustrate when water is moving vs. stagnant water in the pipes.

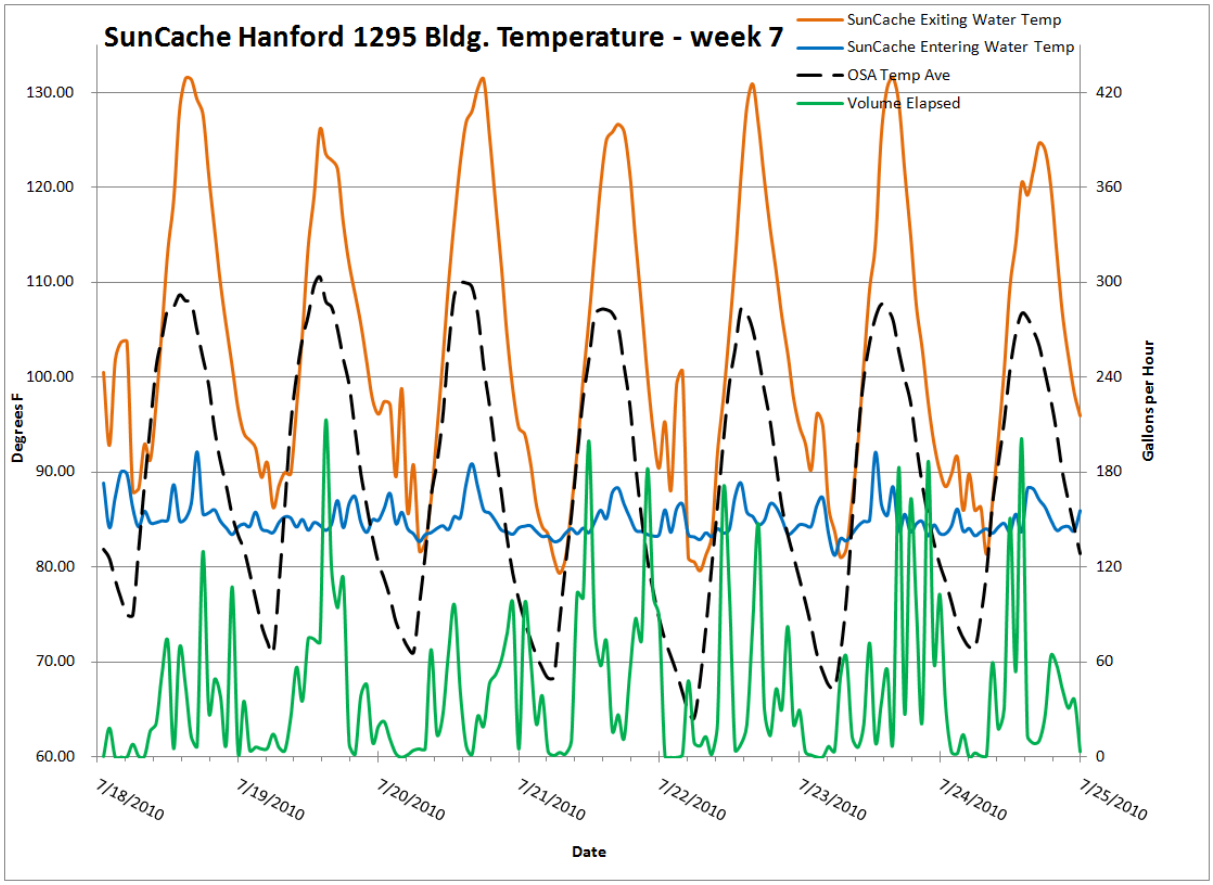

Figure 3-4: Hanford 1295 Bldg – Temperatures & Flow for Typical Summer Week

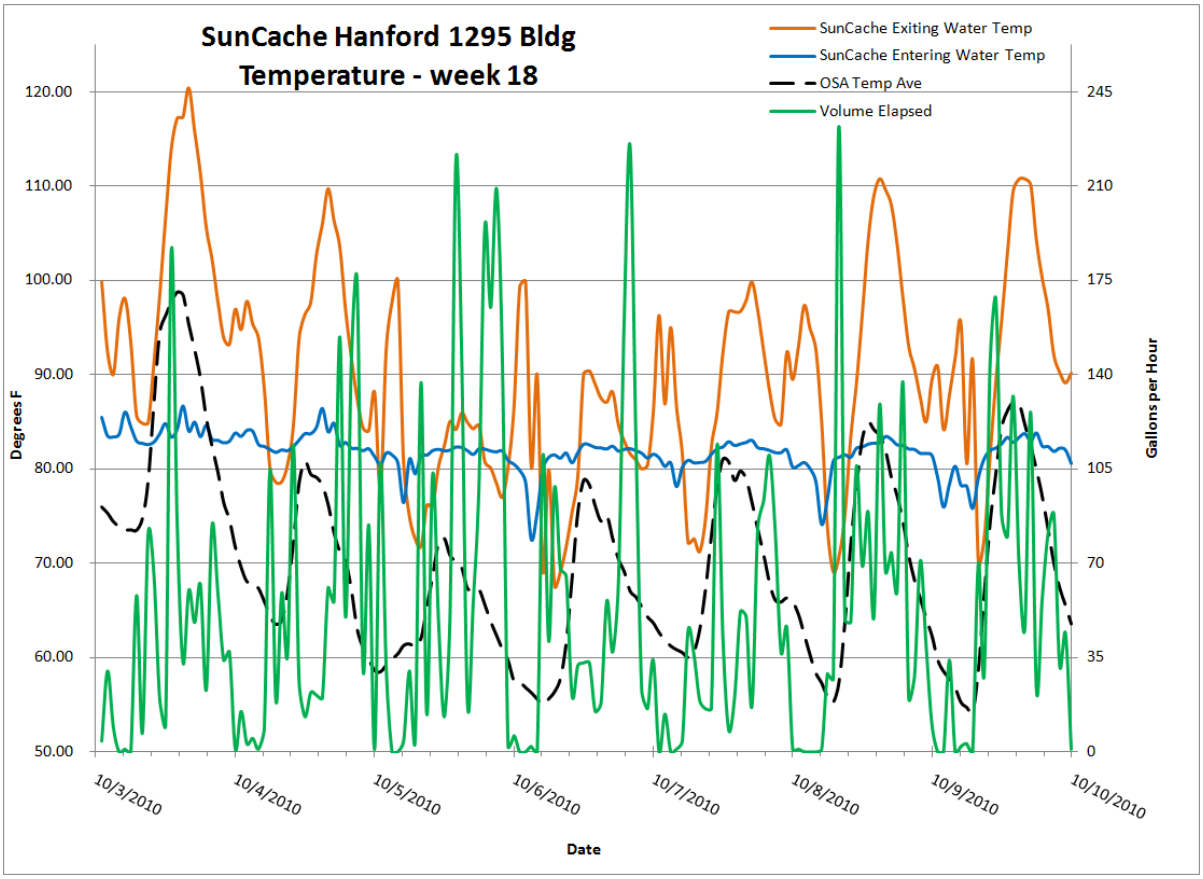

Figure 3-5: Hanford 1295 Bldg – Temperatures & Flow for Typical Fall Week

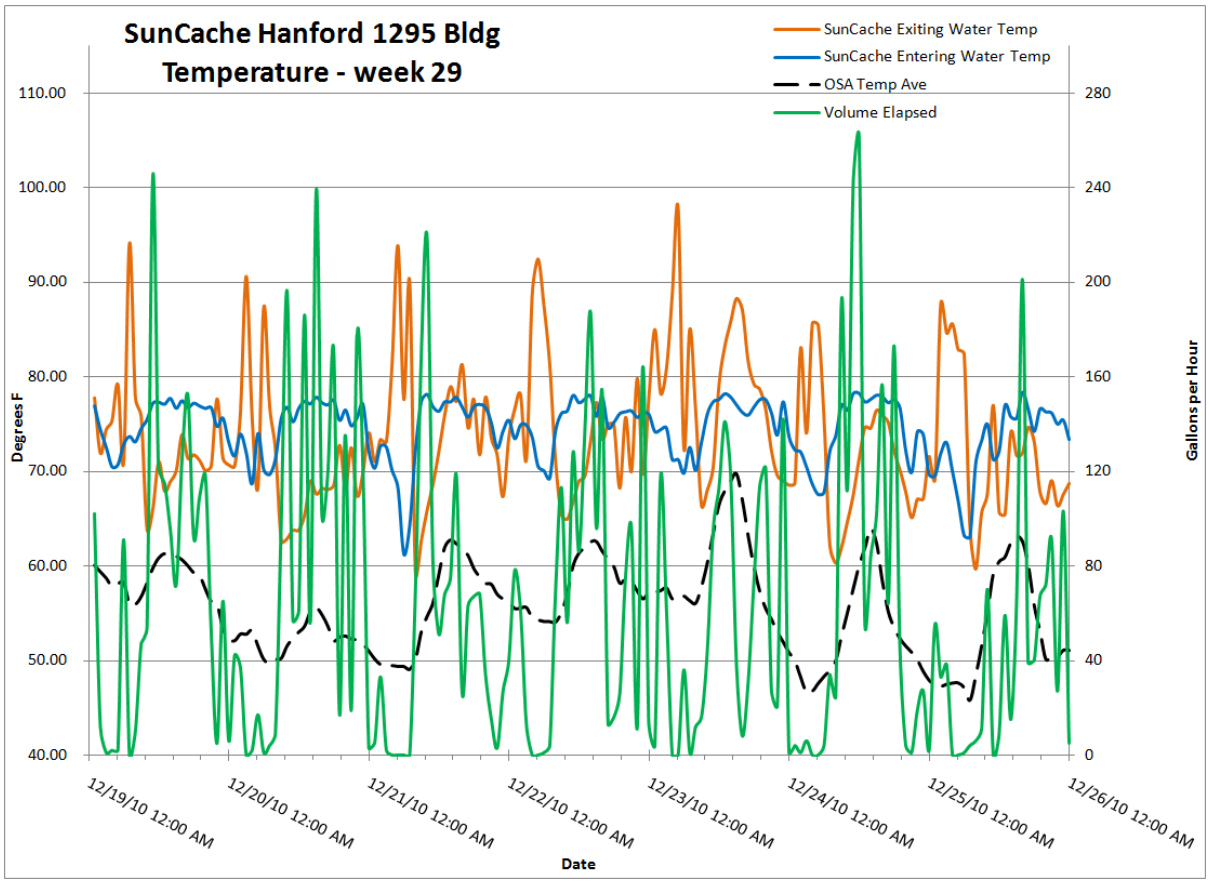

Figure 3-6: Hanford 1295 Bldg – Temperatures & Flow for Typical Winter Week

When referring to the figures on the previous pages, please note that the peaks in the green line indicate instances of hot water consumption by the residents. At each instance of water consumption we note that the orange line is higher than the blue line except for a brief period in the early morning, indicating a net positive energy transfer and therefore a benefit to the building operator.

As we saw in the figures on the previous pages, most of the water flow peaks the delta T, or increase in water temperature inside the SunCache collector is positive, and that delta T does in fact drop below zero, but this occurs briefly and so has only a minor effect on the performance of the SunCache device, which when considered over a period of one or more days is positive overall. As demonstrated by the green line, since this is a multi-family residence someone is using hot water at almost all times, with increased consumption during morning and evening hours. During times of maximum water consumption we note that the temperature increase in the SunCache array at the 1295 building can be up to 40 degrees above the temperature of the water line entering the water heater room. This is a significant temperature increase.

Natural gas savings are calculated by applying an Energy Factor to the elapsed therms figure. The Energy Factor represents the efficiency of a typical water heater; in this case we use an Energy Factor of 53% to match the efficiency measured in the 1300 Building, which uses identical equipment. Combustion of natural gas releases certain emissions (greenhouse gasses); by offsetting a portion of the natural gas that would have been used for domestic water heating, the SunCache array causes greenhouse gas emissions to be offset. Daily and monthly reductions in selected greenhouse gas emissions over the entire test period are presented in the Appendix. Outside air temperature and solar insolation data is also being collected as part of the study. Results are presented in MS Excel Format.

Emissions of CO, NOx, SOx, TOG, and PM are being tracked, as well as Carbon Dioxide Equivalent (CO_2e). All emissions are being reported in pounds, and are calculated as direct combustion emissions only, no direct fugitive emissions from the pipeline network are included in these calculations. Emission factors are based on the US EPA's AP-42, they are as follows (in units of pounds per million cubic feet of natural gas consumed): Carbon Monoxide – 40, NOx – 94, SOx – 0.6, TOG – 11, PM – 7.6 with an emission factor of 53.072 kg/MMBtu for Carbon Dioxide Equivalent as provided by the California ARB for this purpose.

At the Hanford 1295 Building test site several parameters were measured, including SunCache solar collector entrance and exiting water temperatures as well as hot water consumption (makeup water). The BTU meter integrates these sensors and performs calculations to directly report energy transfer to the water. Based on the measured data, over the test period from 6/9/2010 to 1/31/2011 we can conclude that there has been a net energy savings from the use of a SunCache solar collector array at this location. Using an energy factor of 53% to represent the efficiency of a typical water heating appliance, this test site would see a natural gas savings of 603 therms over the test period of 237 days. These results are typical of those found at the other multi-family test site.

Claremont Brooks Street

The test site on Brooks Street in Claremont was selected to be the detailed single-family residential site. The two BTU meters installed on the domestic water heating system are plumbed in such a way that one meter measures the flow of water through the SunCache collector as well as the temperature of the water as it enters and exits the collector. The second BTU meter measures the temperature of the water as it enters and exits the conventional storage tank type natural gas fired water heater. Both BTU meters measure the same water flow since all water that enters the water heater first must flow through the SunCache collector. Please see Figure 4-1 below for a line diagram showing the meter placement and the building's hot water plumbing.

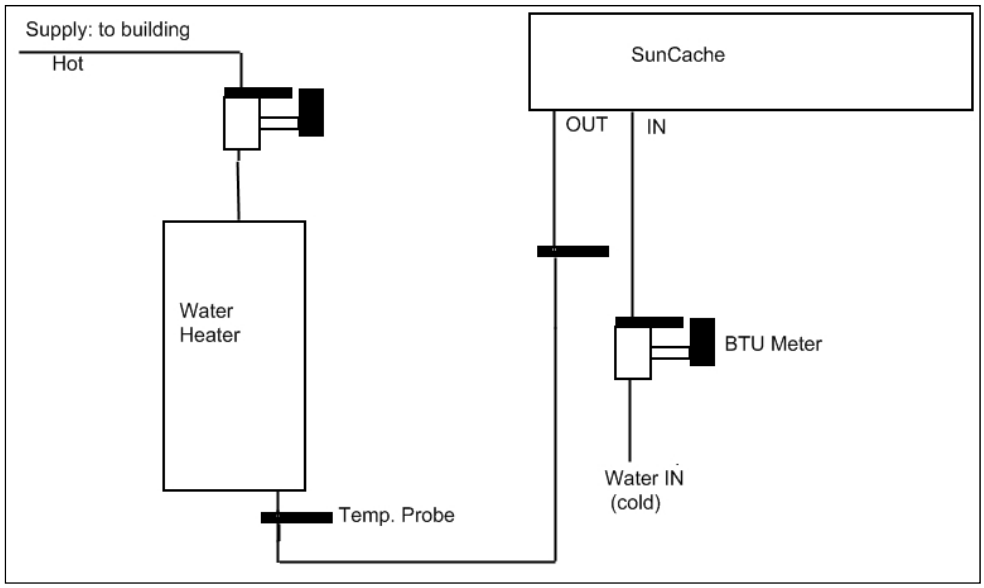

Figure 4-1: Claremont Brooks St – Plumbing Diagram

Data collection at this site began on June 2nd, 2010. These data have been analyzed to ascertain the benefit of using the SunCache solar collector for the typical homeowner in southern California. This study aims to find out under what circumstances the SunCache solar collector can offset natural gas that would have otherwise have been used for domestic water heating, and also to quantify that natural gas offset. Secondary goals include quantifying the airborne emission reductions attributable to SunCache and tracking data on residential use of domestic hot water. On the following pages the findings of this report as they relate to the detailed test site will be presented. Typical weeks and months of data will be presented in this section; complete data sets are included as an appendix to this report.

Table 4-1: SunCache Parameters by Month

Claremont Brooks St							
3	Days	Gallons	Therms Gas Saved	BTU SunCache	BTU Water Heater	Total Btu	% SC
June	25	727.6	2.6	128,017	137,573	265,590	48%
July	31	840.2	2.9	144,763	82,904	227,667	64%
August	31	574.7	1.9	92,883	101,830	194,713	48%
September	30	758.7	2.2	109,128	159,353	268,481	41%
October	31	836.3	1.2	62,367	275,487	337,854	18%
November	30	831.4	0.8	42,002	350,669	392,671	11%
December	31	947.1	0.8	37,578	437,700	475,278	8%
January	31	921.2	0.9	44,030	420,950	464,980	9%
TOTALS	**240**	**6,437.1**	**13.2**	**660,768**	**1,966,466**	**2,627,234**	**25%**
Avg. Monthly Therms saved			**1.7**				
Avg. Monthly Therms saved per Gal			**0.00205**				
Therms Saved per person per day			**0.018**				

The water consumption figure is measured directly by the BTU meters. Total elapsed BTU is calculated onboard each BTU meter, for this reason two BTU meters were needed for this site. To convert from BTU to therms we use the conversion factor of 100,000 BTU per therm. To calculate the natural gas saved we apply an Energy Factor to the elapsed therms figure. The Energy Factor represents the efficiency of a typical residential water heater; in this case we use an Energy Factor of 50%. In order to calculate the volume of the natural gas offset we use an average higher heating value (HHV) of 1030 BTU per cubic foot. Please see Figures 4-2 and 4-3, on the following page for graphs of a typical month's water consumption and useful energy transfer in the SunCache solar collector respectively.

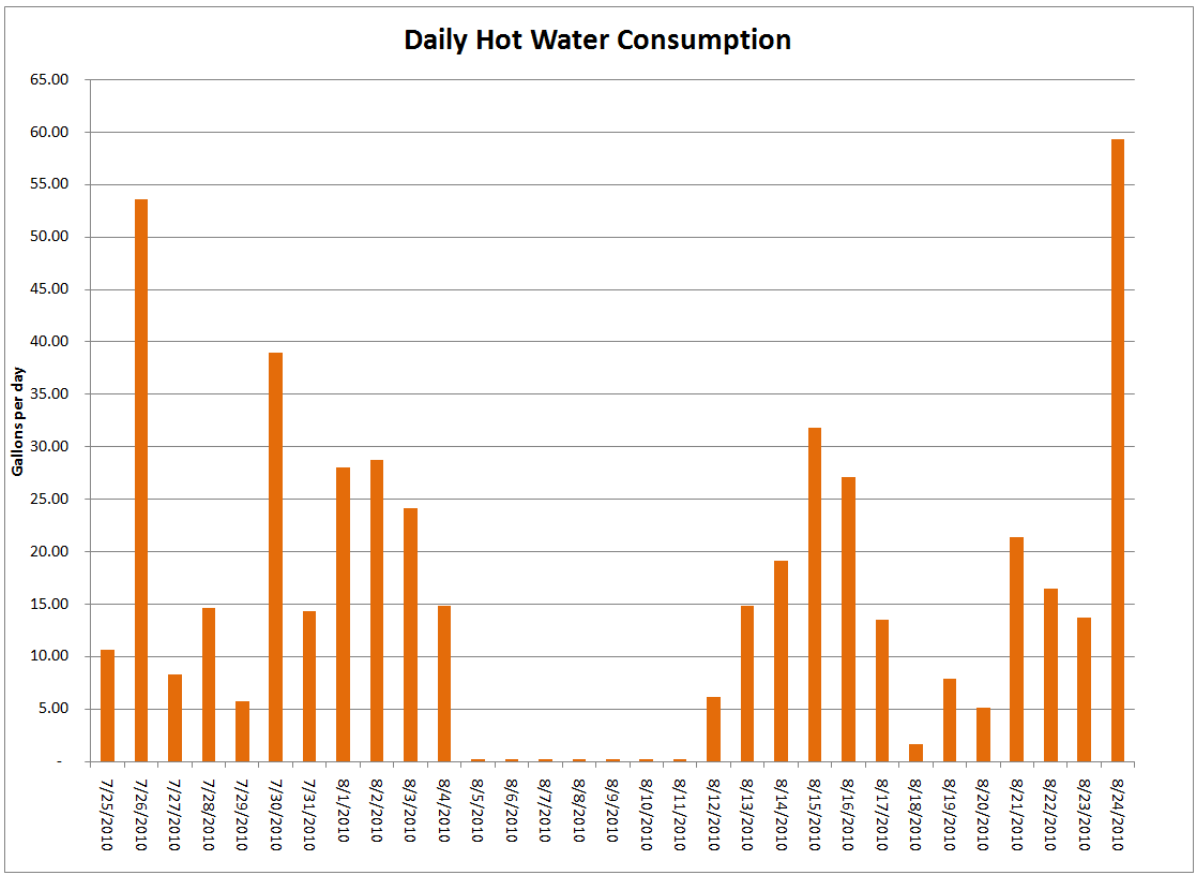

Figure 4-2: Claremont Brooks St – Daily Domestic Hot Water Consumption

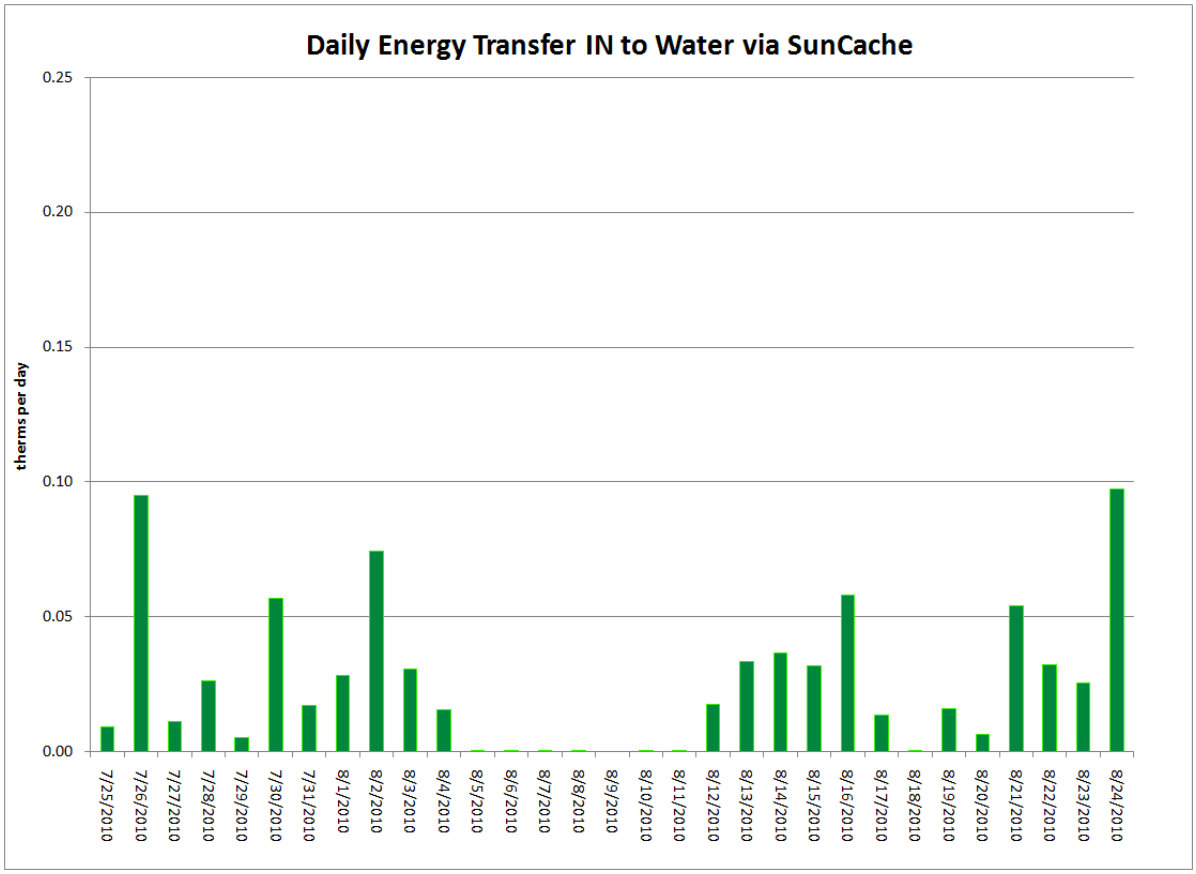

Figure 4-3: Claremont Brooks St – Daily Energy Transfer into Water via SunCache Panel

When comparing hot water consumption to energy transfer, there are some obvious similarities, but the two graphs are not identical. To explain why, it helps to consider the time of day that the water consumption occurred: water consumed early in the morning exits the SunCache at a colder temperature and therefore has not increased in energy compared to the water entering the house. Water drawn later in the day, after the SunCache has been warmed in the sun, exits the solar collector at a higher temperature than the water entering the house; and therefore has offset some of the energy that would have been used by the natural gas water heater to heat the water to the desired set-point. Interesting statistics on water use and time of day are shown in Table 4-2 below. Energy transfer and time of day are covered in Table 4-3 below. The data used in the following tables were collected in a summer month.

Table 4-2: Claremont Brooks St – Water Consumption by Time of Day (left)

Table 4-3: Claremont Brooks St – SunCache Energy Transfer by Time of Day (right)

Monthly % of Hot Water Consumption	
Midnight - 6:00AM	6%
6:00AM - Noon	44%
Noon - 6:00PM	20%
6:00PM - Midnight	31%

Monthly % of Suncache Energy Consumption	
Midnight - 6:00AM	6%
6:00AM - Noon	22%
Noon - 6:00PM	26%
6:00PM - Midnight	46%

Since all water will be heated to the same temperature set point, regardless of whether or not the SunCache collector is present, any energy transfer that takes place in the SunCache array to pre-heat the makeup water before it enters the water heater is considered a positive outcome for the homeowner. To best understand the operation of the SunCache device in combination with a storage tank type water heater it is helpful to study the temperature data collected at the intake and exit lines to the collector, as well as the temperature at the exit of the water heater leading to the house. Please see Figures 4-4 through 4-6 below and on the following page for graphs of a typical week of temperature data from the Claremont detailed test site in the summer, fall and winter seasons respectively. Water flow data is included to illustrate when water is moving vs. stagnant water in the pipes.

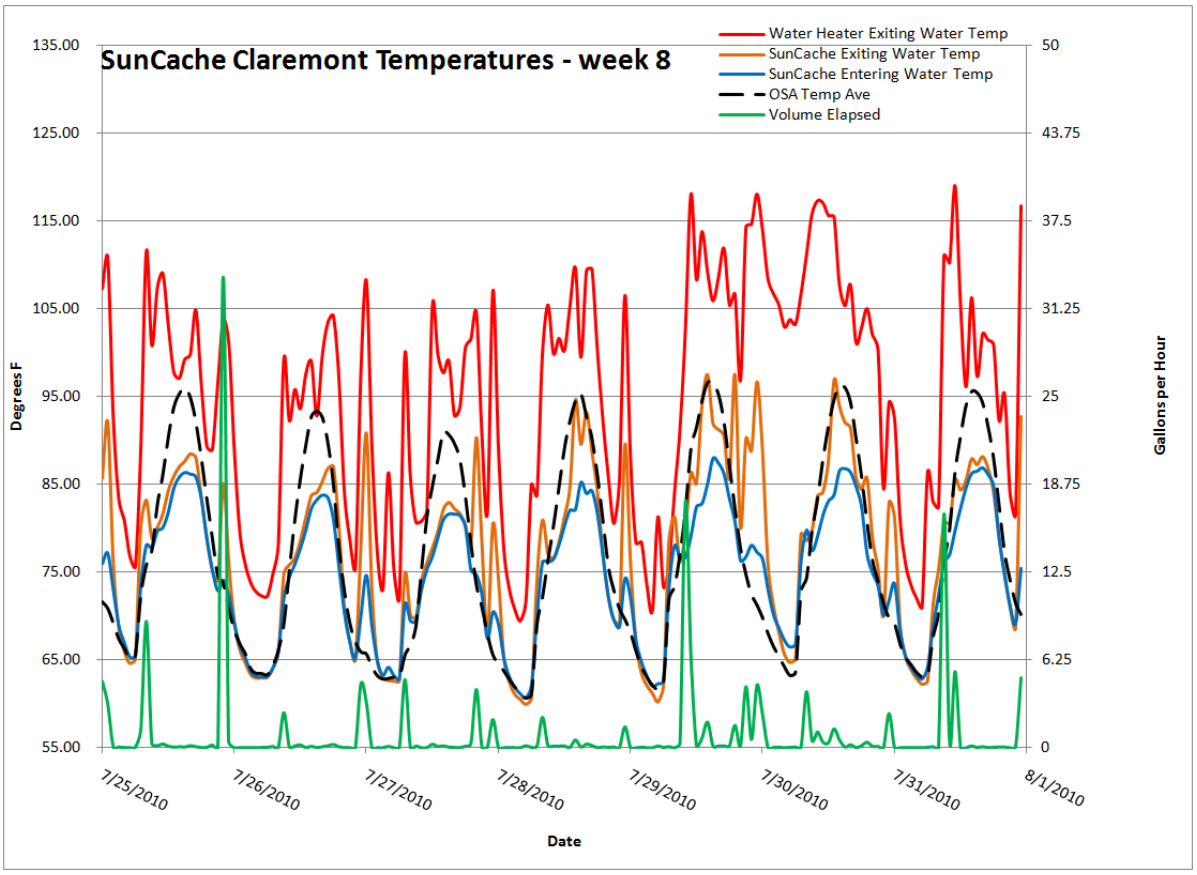

Figure 4-4: Claremont Brooks St – Temperatures & Flow in Summer Month

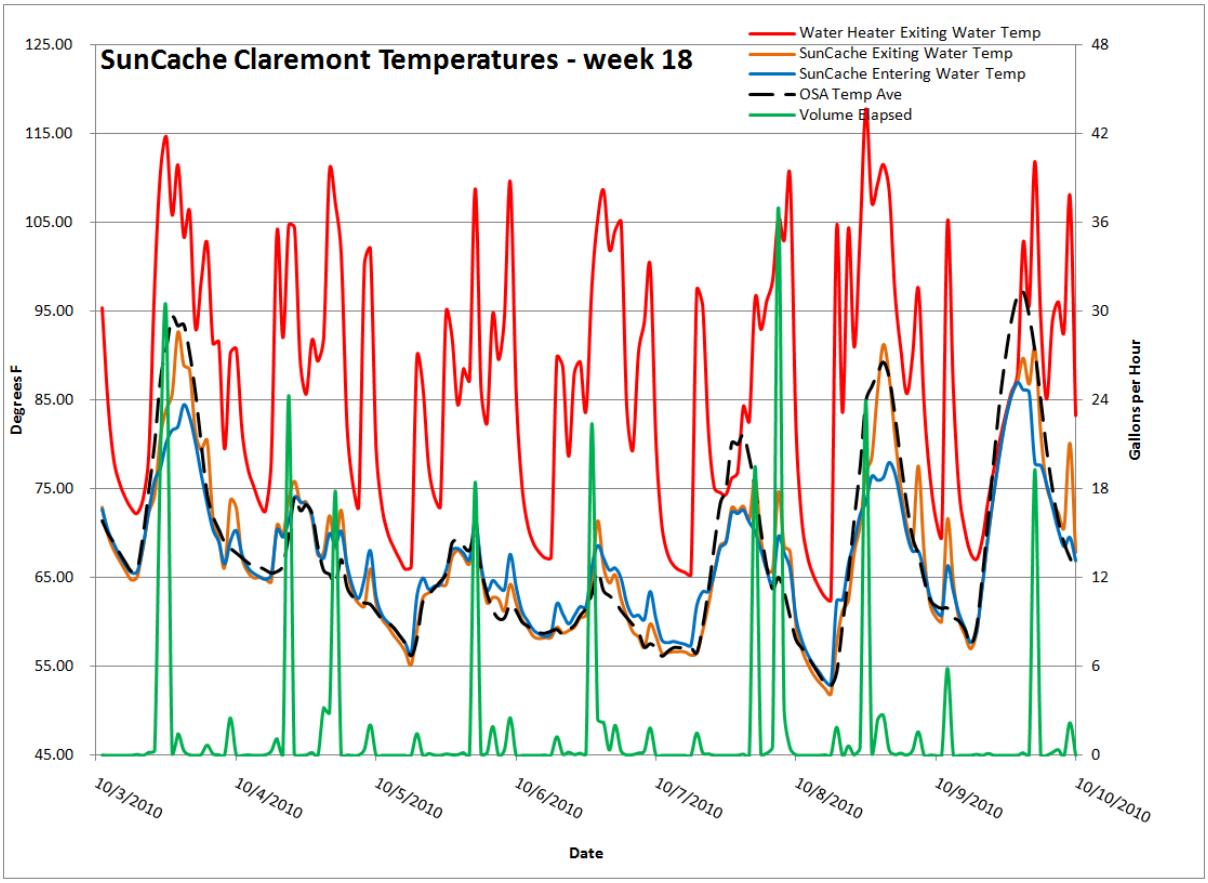

Figure 4-5: Claremont Brooks St – Temperatures & Flow in Fall Month

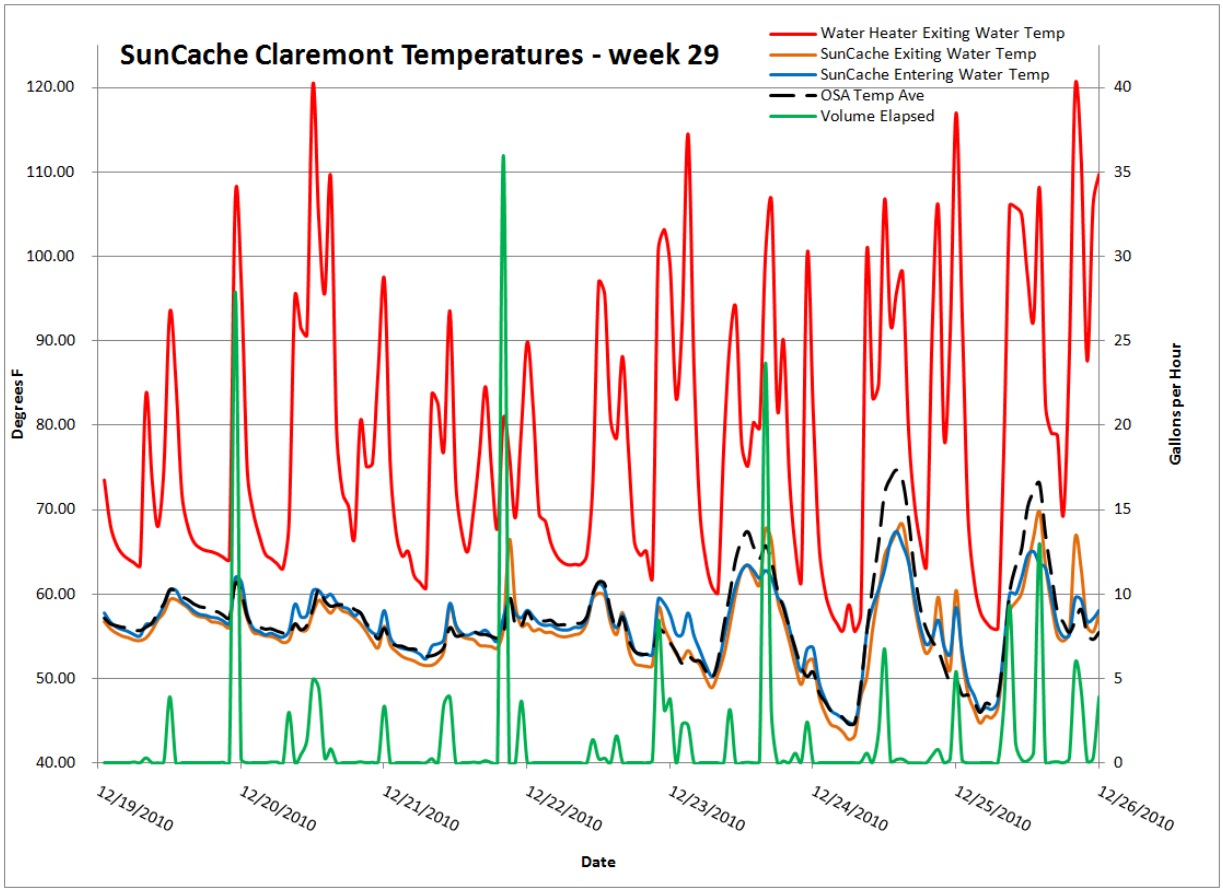

Figure 4-4: Claremont Brooks St – Temperatures & Flow in Winter Month

When referring to the figures above, please note that the orange line (SunCache Exit Temperature) and the blue line (SunCache Entrance Temperature) tend to converge at some point approaching the outside air temperature when there has not been any water flow for a period of time. Since the water in the pipes gradually comes to equilibrium with the air when not flowing, the temperature probes are reporting this (air) temperature. This does not negatively affect the data collection since energy transfer is only recorded when water is being used. The peaks in the green line indicate instances of hot water consumption by the residents. The red line shows the temperature of the water as it leaves the water heater and enters the residence. At each instance of water consumption we note that the orange line is higher than the blue line, indicating a net positive energy transfer and therefore a benefit to the homeowner.

Natural gas savings are calculated by applying an Energy Factor to the total elapsed energy transfer in the SunCache collector. The Energy Factor represents the efficiency of a typical residential water heater; in this case we use an Energy Factor of 50%. Any energy transfer in the SunCache directly offsets energy that would have otherwise been used by the water heater. Combustion of natural gas releases certain emissions (greenhouse gasses); by offsetting a portion of the natural gas that would have been used for domestic water heating, the SunCache array causes greenhouse gas emissions to be offset. Daily and monthly reductions in selected greenhouse gas emissions over the entire test period are presented in the Appendix. Outside air temperature and solar insolation data is also being collected as part of the study. Results are presented in MS Excel Format.

Emissions of CO, NOx, SOx, TOG, and PM are being tracked, as well as Carbon Dioxide Equivalent (CO_2e). All emissions are being reported in pounds, and are calculated as direct combustion emissions only, no direct fugitive emissions from the pipeline network are included in these calculations. Emission factors are based on the US EPA's AP-42, they are as follows (in units of pounds per million cubic feet of natural gas consumed): Carbon Monoxide – 40, NOx – 94, SOx – 0.6, TOG – 11, PM – 7.6 with an emission factor of 53.072 kg/MMBtu for Carbon Dioxide Equivalent as provided by the California ARB for this purpose.

At the detailed test site several parameters were measured, including hot water heater and SunCache solar collector entrance and exiting water temperatures as well as hot water consumption. Each BTU meter integrates temperature and flow measurements and performs calculations to directly report energy transferred to the water. Based on the measured data, over the test period from 6/2/2010 to 1/31/2011 we can conclude that there has been a net energy savings from the use of a SunCache solar collector at this location. Using an energy factor of 50% to represent the efficiency of an average residential water heating appliance this test site would see a natural gas savings of 13.2 therms over the test period of 240 days. These results are typical of those found at the other test sites.

Claremont Foxpark Street

This site is awaiting SunCache bladder replacement under warranty. All sensors are currently installed and operational. The homeowner has the replacement bladder, but has not installed it.

Long Beach

Long Beach is one of the streamlined single-family residential sites. The single BTU meter is installed on the domestic water heating system in such a way that it measures the flow of water through the SunCache array. Data collection at this site began on June 10th, 2010. This data has been analyzed to ascertain the benefit of using the SunCache solar collector for the typical homeowner in southern California. This study aims to find out under what circumstances the SunCache solar collector can offset natural gas that would have otherwise have been used for domestic water heating, and also to quantify that natural gas offset. Secondary goals include quantifying the airborne emission reductions attributable to SunCache and tracking data on residential use of domestic hot water. On the following pages the findings of this report as they relate to the Long Beach test site will be presented. Typical weeks and months of data will be presented in this section; complete data sets are included as an appendix to this report.

Please see Figure 6-1, below for a line diagram showing the meter placement and the building's hot water plumbing. Table 6-1 on the following page shows summarized monthly information from this test site.

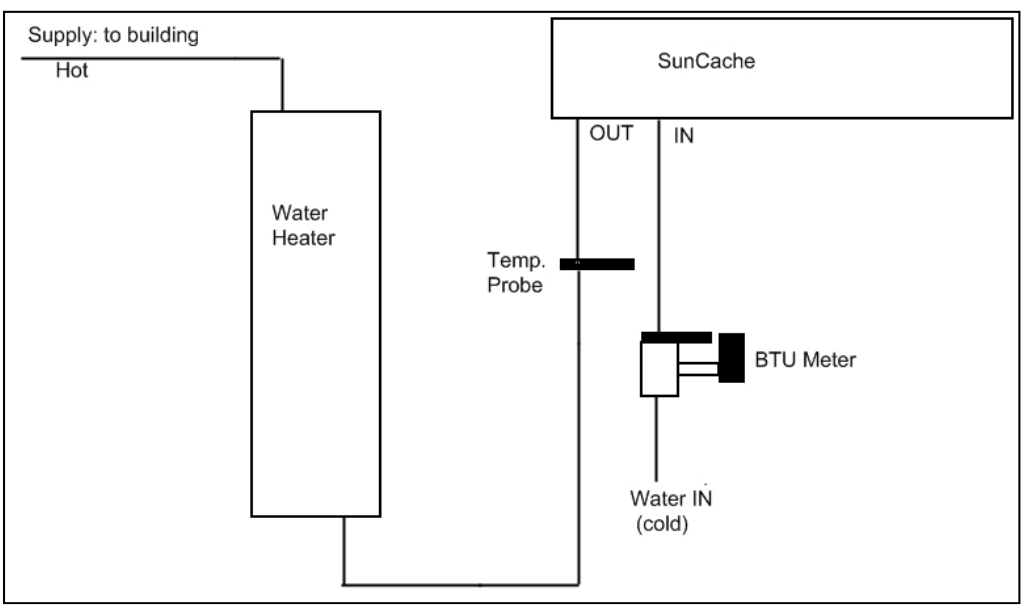

Figure 6-1: Long Beach – Plumbing Diagram

Table 6-1: SunCache Parameters by Month

Long Beach			
2	Days	Gallons	Therms Gas Saved
June	20	683	2.2
July	31	908	2.5
August	31	1,038	3.3
September	30	1,127	3.5
October	31	1,093	3.0
November	30	1,310	3.8
December	31	1,479	4.0
January	31	1,541	4.4
TOTALS	**235**	**9,179**	**26.6**
Avg. Monthly Therms saved			**3.4**
Avg. Monthly Therms saved per Gal			**0.00290**
Therms Saved per person per day			**0.057**

The water consumption figure is measured directly by the BTU meter. Total elapsed BTU is calculated onboard the BTU meter. To convert from BTU to therms we use the conversion factor of 100,000 BTU per therm. To calculate the natural gas saved we apply an Energy Factor to the elapsed therms figure. The Energy Factor represents the efficiency of a typical residential water heater. For Long Beach we use an Energy Factor of 50%. In order to calculate the volume of the natural gas offset we use an average higher heating value (HHV) of 1030 BTU per cubic foot. Please see Figures 6-2 and 6-3, on the following page for graphs of a typical month's water consumption and useful energy transfer in the SunCache solar collector respectively.

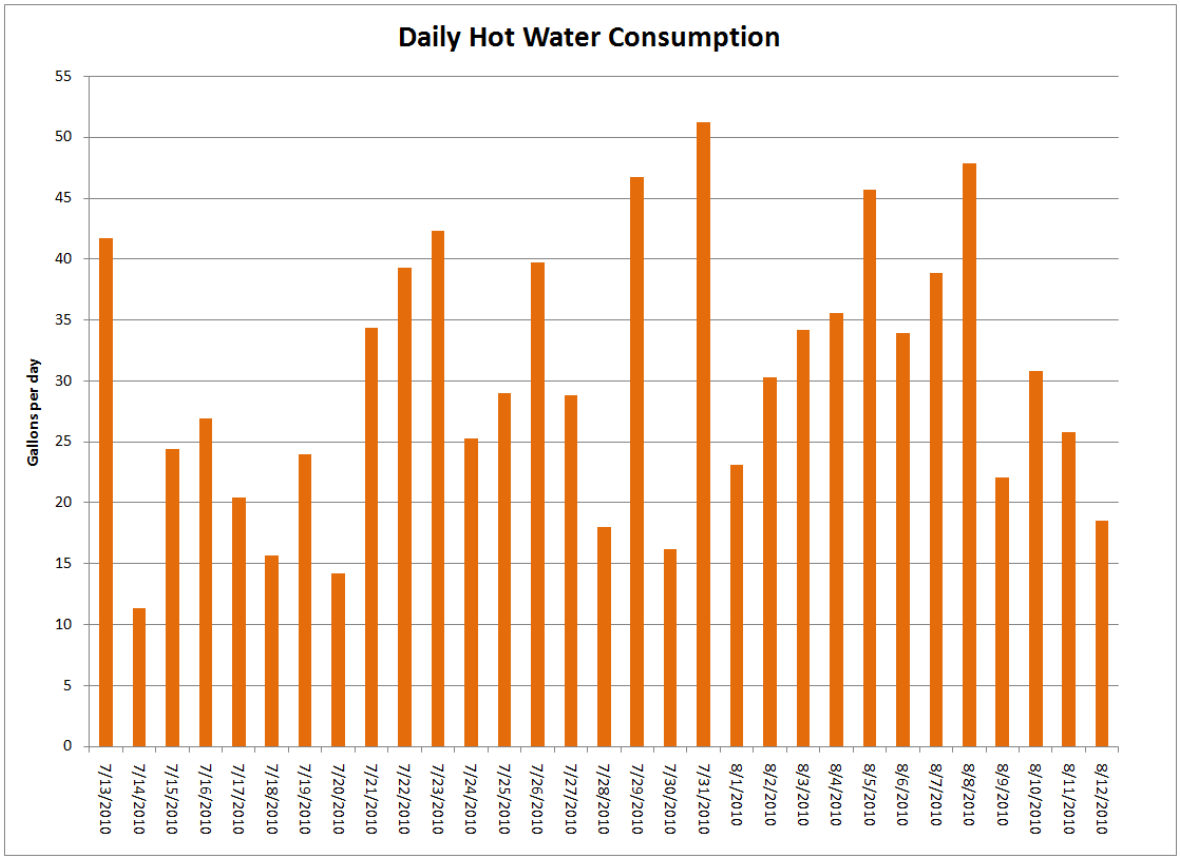

Figure 6-2: Long Beach – Daily Domestic Hot Water Consumption

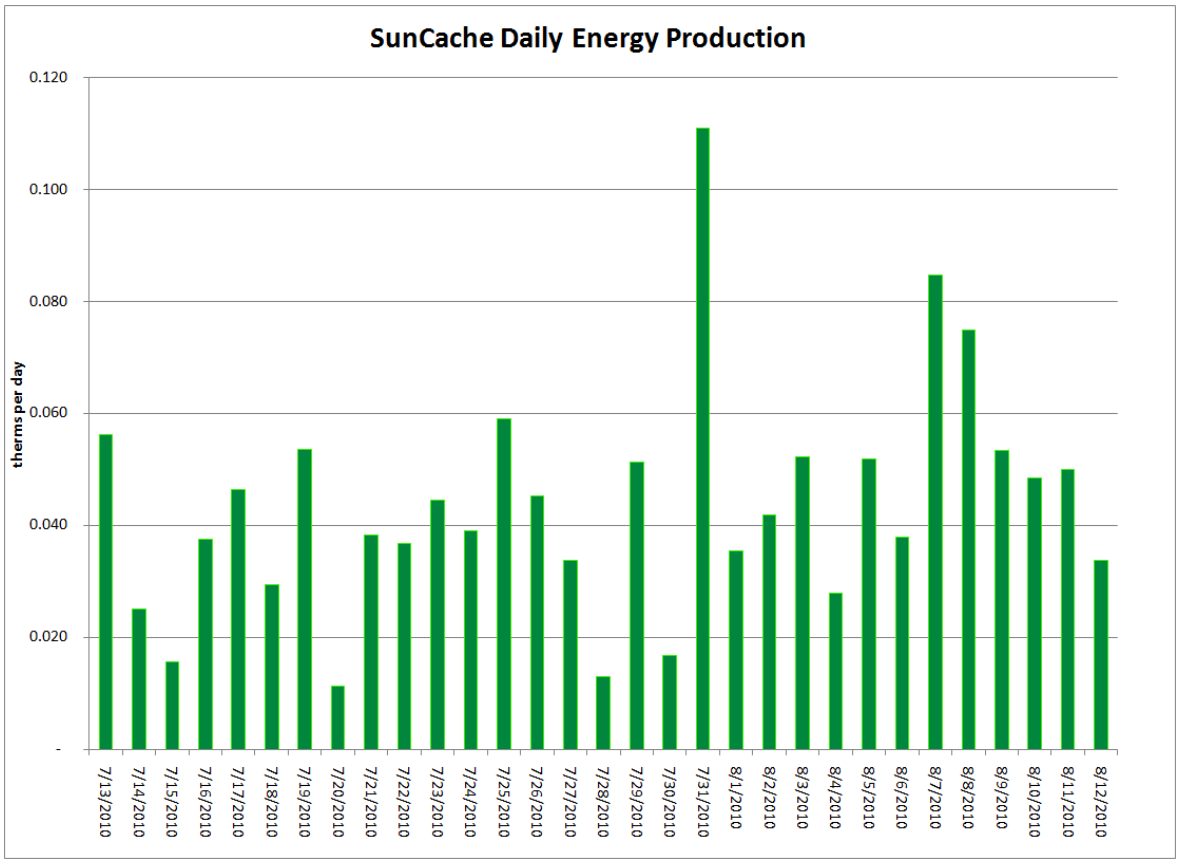

Figure 6-3: Long Beach – Daily Energy Transfer into Water via SunCache Panel

When comparing hot water consumption to energy transfer, there are some obvious similarities, but the two graphs are not identical. To explain why, it helps to consider the time of day that the water consumption occurred: water consumed early in the morning exits the SunCache at a colder temperature and therefore has not increased in energy relative to the water entering the house. Water drawn later in the day, after the SunCache has been warmed by the sun, exits the solar collector at a higher temperature relative to the water entering the house. Therefore, has offset some of the energy that would have been used by the natural gas water heater to heat the water to the desired set-point. Interesting statistics on water use and time of day are shown in Table 6-2 below. Energy transfer and time of day are covered in Table 6-3 below.

Table 6-2: Long Beach – Water Consumption & Time of Day (below left)

Table 6-3: Long Beach – SunCache Energy Transfer & Time of Day (below right)

Monthly % of Hot Water Consumption	
Midnight - 6:00AM	8%
6:00AM - Noon	55%
Noon - 6:00PM	15%
6:00PM - Midnight	22%

Monthly % of Suncache Energy Consumption	
Midnight - 6:00AM	1%
6:00AM - Noon	40%
Noon - 6:00PM	26%
6:00PM - Midnight	33%

Please see Figures 6-4 through 6-6 on the following pages for graphs of a typical week of temperature data from the Long Beach test site in the summer, fall and winter seasons respectively. Water flow data is included to illustrate when water is moving vs. stagnant water in the pipes.

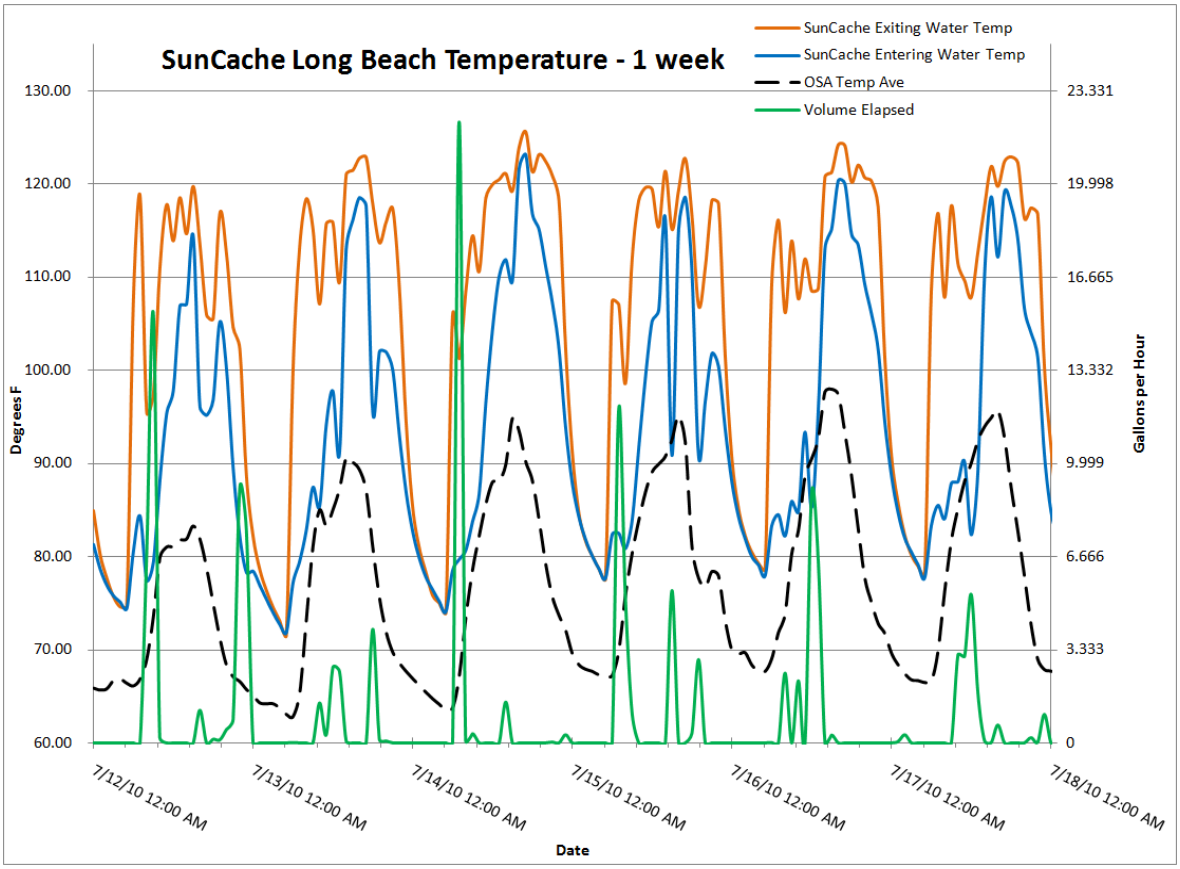

Figure 6-4: Long Beach – Temperatures & Flow in Summer Month

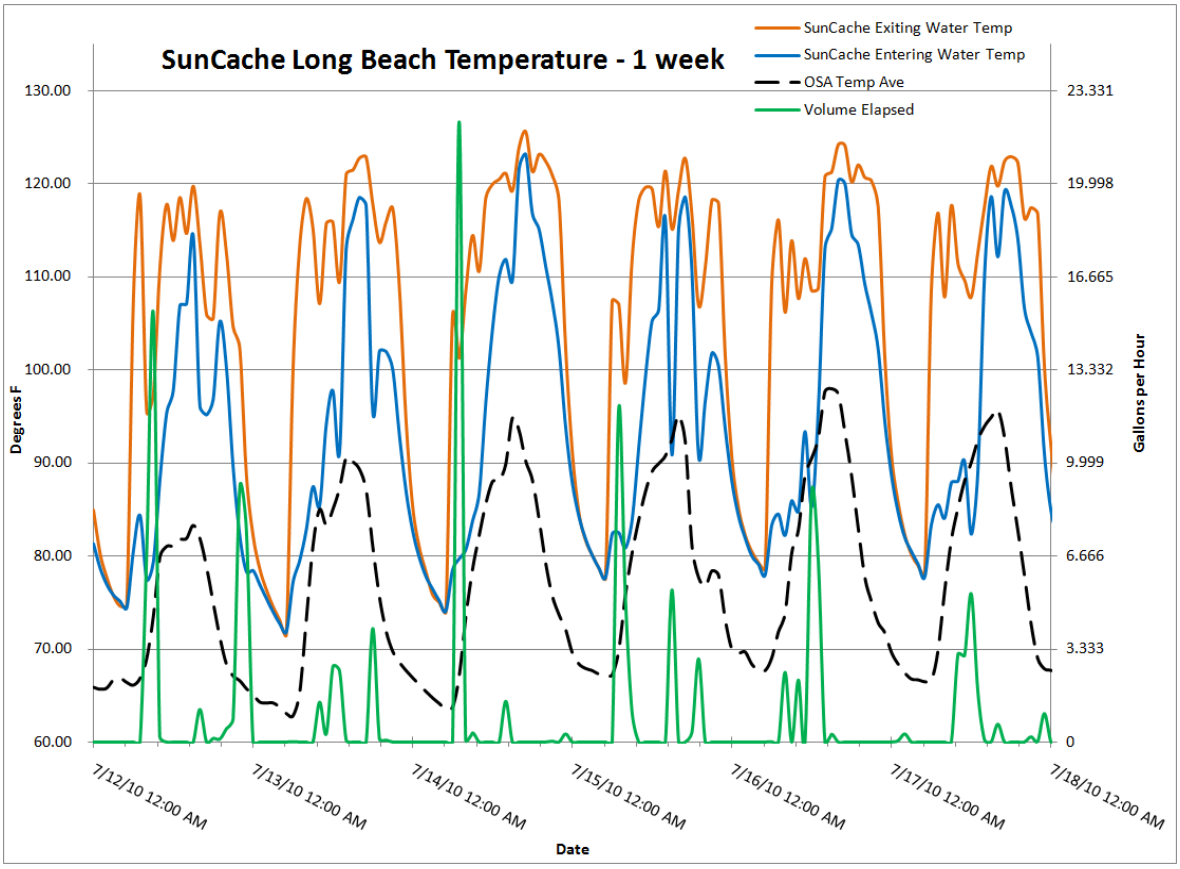

Figure 6-5: Long Beach – Temperatures & Flow in Fall Month

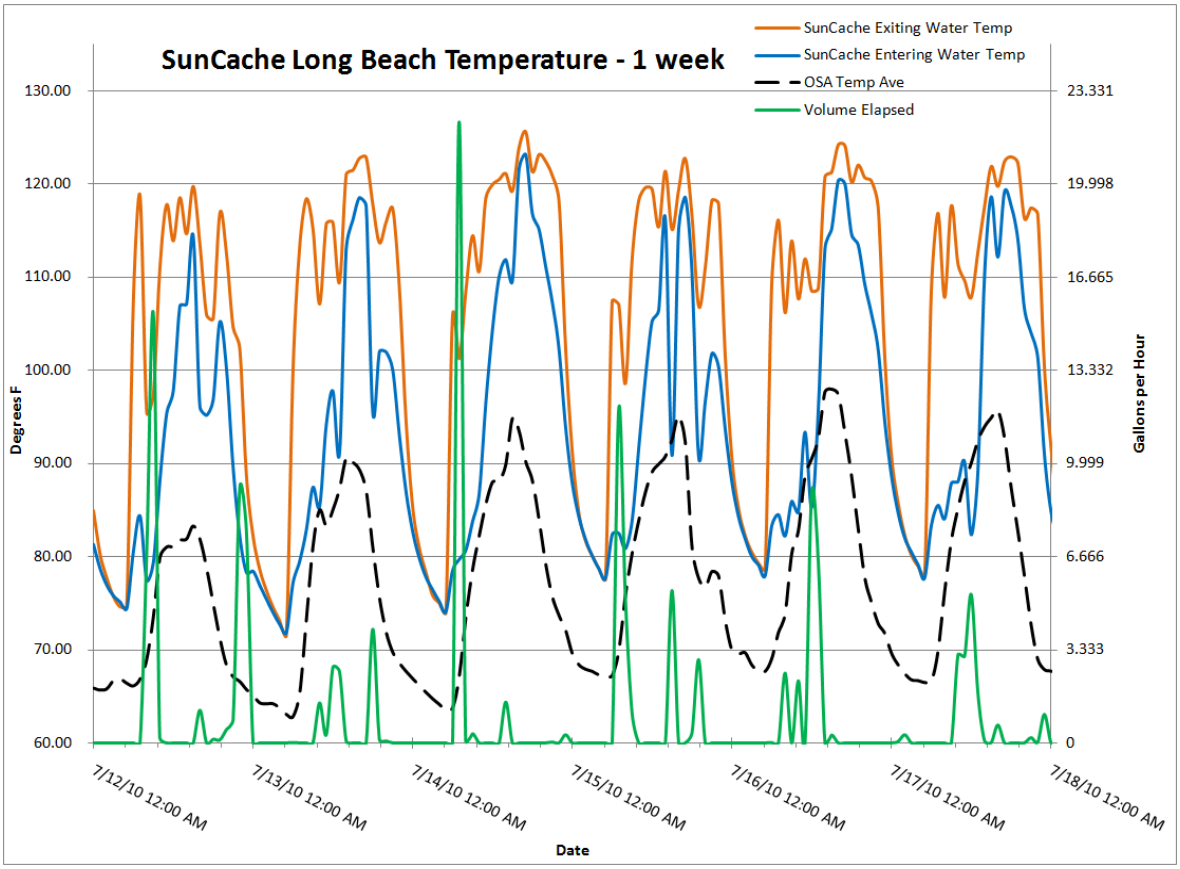

Figure 6-6: Long Beach – Temperatures & Flow in Winter Month

When referring to the figures above and on the previous page, please note that the orange line (SunCache Exit Temperature) and the blue line (SunCache Entrance Temperature) tend to converge at some point a bit warmer than the outside air temperature when there has not been any water flow for a period of time. Since the water in the pipes gradually comes to equilibrium with the air inside the water heater closet when not flowing, the temperature probes are reporting this (air) temperature. This does not negatively affect the data collection since energy transfer is only recorded when water is being used. The peaks in the green line indicate instances of hot water consumption by the residents. At each instance of water consumption we note that the orange line is higher than the blue line, indicating a net positive energy transfer and therefore a benefit to the homeowner. Please note that delta T does in fact drop below zero, but none of these minimums occur at the same time as water being consumed so they do not detract from performance of the SunCache device.

Natural gas savings are calculated by applying an Energy Factor to the total elapsed energy transfer in the SunCache collector. The Energy Factor represents the efficiency of a typical residential water heater; in this case we use an Energy Factor of 50%. Any energy transfer in the SunCache directly offsets energy that would have otherwise been used by the water heater. Combustion of natural gas releases certain emissions (greenhouse gasses); by offsetting a portion of the natural gas that would have been used for domestic water heating, the SunCache array causes greenhouse gas emissions to be offset. Daily and monthly reductions in selected greenhouse gas emissions over the entire test period are presented in the Appendix. Outside air temperature and solar insolation data is also being collected as part of the study. Results are presented in MS Excel Format.

Emissions of CO, NOx, SOx, TOG, and PM are being tracked, as well as Carbon Dioxide Equivalent (CO_2e). All emissions are being reported in pounds, and are calculated as direct combustion emissions only, no direct fugitive emissions from the pipeline network are included in these calculations. Emission factors are based on the US EPA's AP-42, they are as follows (in units of pounds per million cubic feet of natural gas consumed): Carbon Monoxide – 40, NOx – 94, SOx – 0.6, TOG – 11, PM – 7.6 with an emission factor of 53.072 kg/MMBtu for Carbon Dioxide Equivalent as provided by the California ARB for this purpose.

At the Long Beach test site several parameters were measured, including SunCache solar collector entrance and exiting water temperatures as well as hot water consumption. The BTU meter integrates these sensors and performs calculations to directly report energy transfer to the water. Based on the measured data, over the test period from 6/10/2010 to 1/31/2011 we can conclude that there has been a net energy savings from the use of a SunCache solar collector at this location. Using an energy factor of 50% to represent the efficiency of an average residential water heating appliance this test site would see a natural gas savings of 26.6 therms over the test period of 235 days. These results are typical of those found at the other test sites.

Los Angeles

Los Angeles is one of the streamlined single-family residential sites. The single BTU meter is installed on the domestic water heating system in such a way that it measures the flow of water through the SunCache array. Data collection at this site began on June 14th, 2010. These data have been analyzed to ascertain the benefit of using the SunCache solar collector for the typical homeowner in southern California. This study aims to find out under what circumstances the SunCache solar collector can offset natural gas that would have otherwise have been used for domestic water heating, and also to quantify that natural gas offset. Secondary goals include quantifying the airborne emission reductions attributable to SunCache and tracking data on residential use of domestic hot water. On the following pages the findings of this report as they relate to the Los Angeles test site will be presented. This site is unique in that the SunCache collector is installed on a flat roof. Initial findings suggest that the slope of the roof will have little or no effect on the performance of the unit. Typical weeks and months of data will be presented in this section of the report; complete data sets are included as an appendix.

Please see Figure 7-1, on the following page for a line diagram showing the meter placement and the building's hot water plumbing. Table 6-1 shows summarized monthly information from this test site.

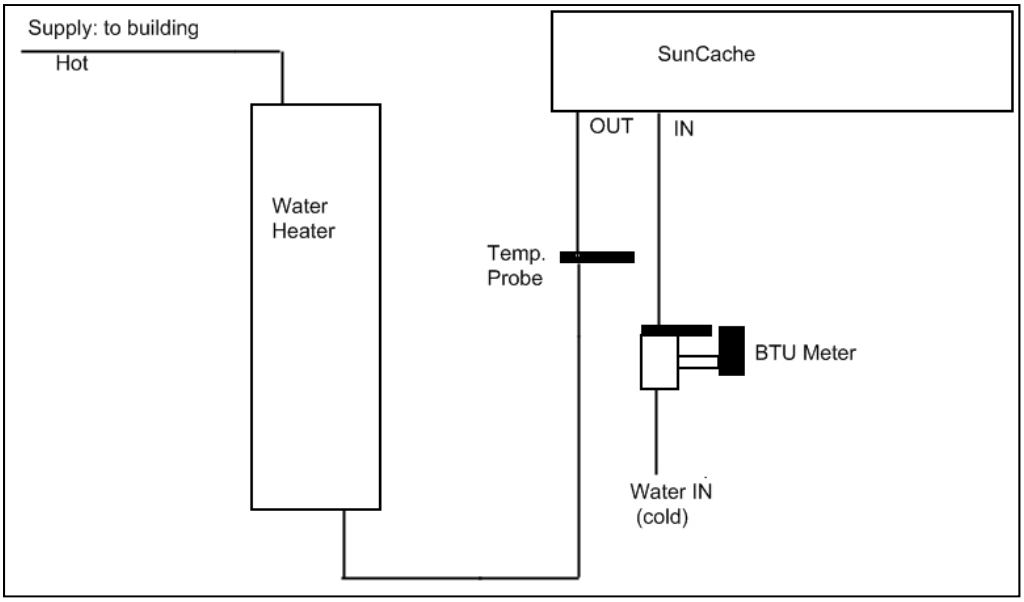

Figure 7-1: Los Angeles – Plumbing Diagram

Table 7-1: SunCache Parameters by Month

Los Angeles			
3	Days	Gallons	Therms Gas Saved
June	16	1,117	3.9
July	31	1,529	5.5
August	31	1,890	6.2
September	13	724	1.7
October	31	1,989	2.4
November	30	1,707	1.3
December	31	1,772	0.5
January	31	2,231	1.9
TOTALS	**214**	**12,960**	**23.4**
Avg. Monthly Therms saved			**3.3**
Avg. Monthly Therms saved per Gal			**0.00180**
Therms Saved per person per day			**0.036**

The water consumption figure is measured directly by the BTU meter. Total elapsed BTU is calculated onboard the BTU meter. To convert from BTU to therms we use the conversion factor of 100,000 BTU per therm. To calculate the natural gas saved we apply an Energy Factor to the elapsed therms figure. The Energy Factor represents the efficiency of a typical residential water heater. For Los Angeles we use an Energy Factor of 50%. In order to calculate the volume of the natural gas offset we use an average higher heating value (HHV) of 1,030 BTU per cubic foot. Please see Figures 7-2 and 7-3, on the following page for graphs of a typical month's water consumption and useful energy transfer in the SunCache solar collector respectively.

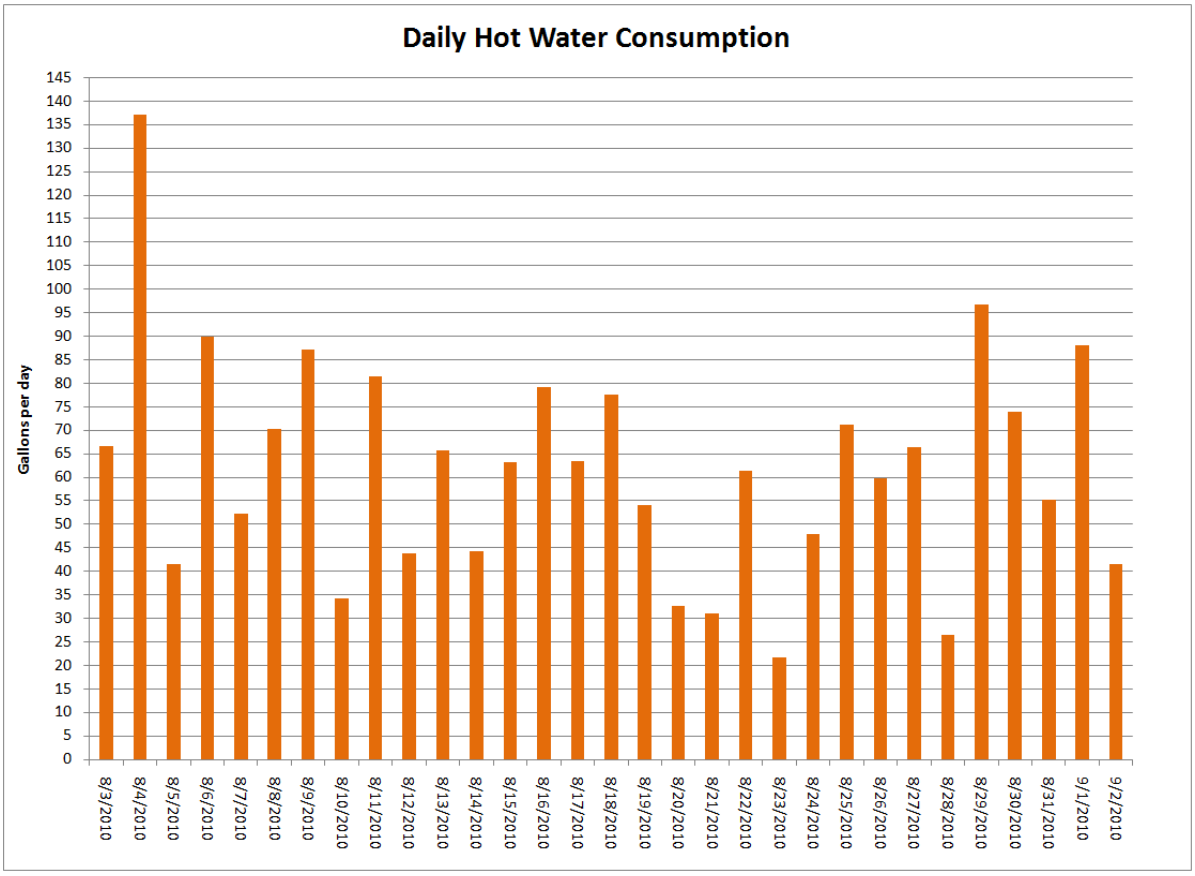

Figure 7-2: Los Angeles – Daily Domestic Hot Water Consumption

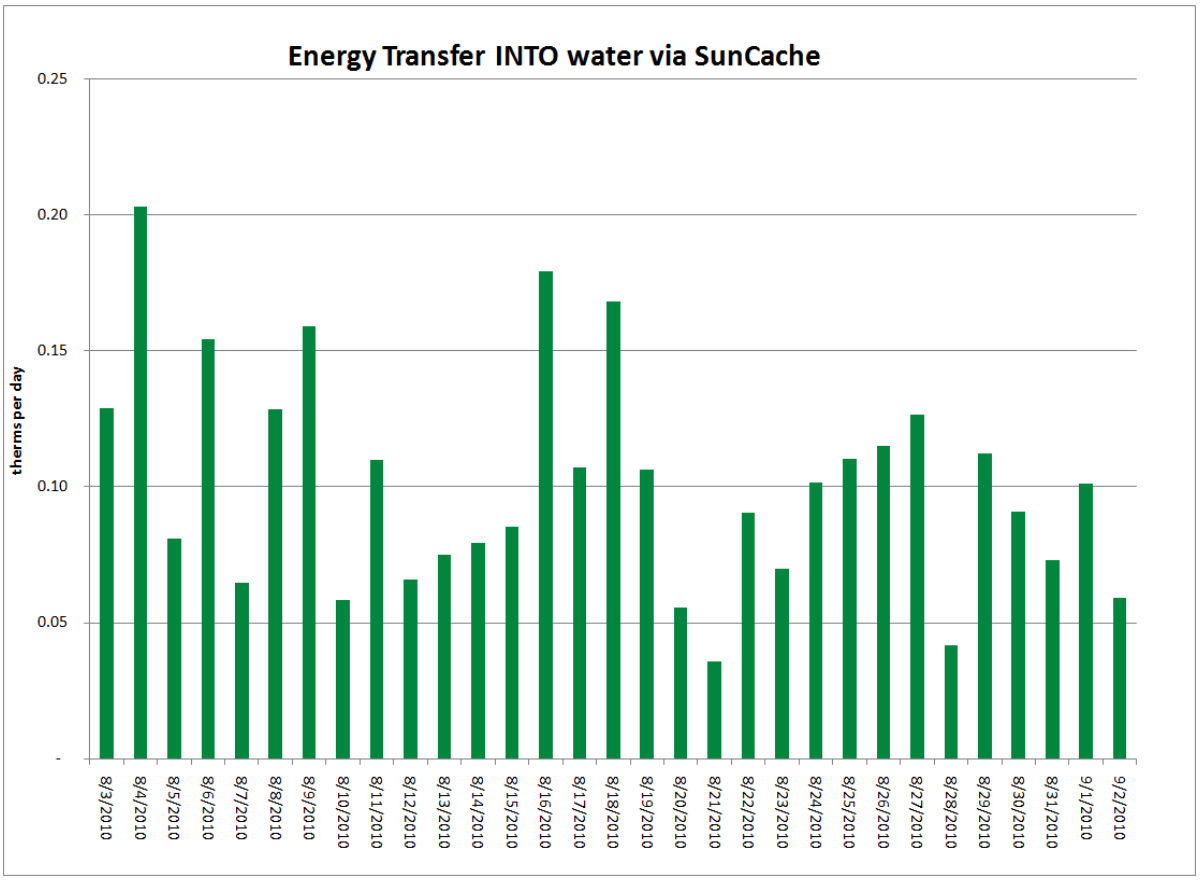

Figure 7-3: Los Angeles – Daily Energy Transfer into Water via SunCache Panel

When comparing hot water consumption to energy transfer, there are some obvious similarities, but the two graphs are not identical. To explain why, it helps to consider the time of day that the water consumption occurred: water consumed early in the morning exits the SunCache at a colder temperature and therefore has not increased in energy compared to the water entering the house. Water drawn later in the day, after the SunCache has been warmed in the sun, exits the solar collector at a higher temperature than the water entering the house; and therefore has offset some of the energy that would have been used by the natural gas water heater to heat the water to the desired set-point. Interesting statistics on water use and time of day are shown in Table 7-2 below. Energy transfer and time of day are covered in Table 7-3 below. The data used in Tables 7-2 and 7-3 was collected in the summer season.

Table 7-2: Los Angeles – Water Consumption & Time of Day (below left)

Table 7-3: Los Angeles – SunCache Energy Transfer & Time of Day (below right)

Monthly % of Hot Water Consumption	
Midnight - 6:00AM	4%
6:00AM - Noon	32%
Noon - 6:00PM	23%
6:00PM - Midnight	42%

Monthly % of Suncache Energy Consumption	
Midnight - 6:00AM	2%
6:00AM - Noon	11%
Noon - 6:00PM	35%
6:00PM - Midnight	52%

Please see Figures 7-4 through 7-6 on the following pages for graphs of a typical week of temperature data from the Los Angeles test site in the summer, fall and winter seasons respectively. Water flow data is included to illustrate when water is moving vs. stagnant water in the pipes.

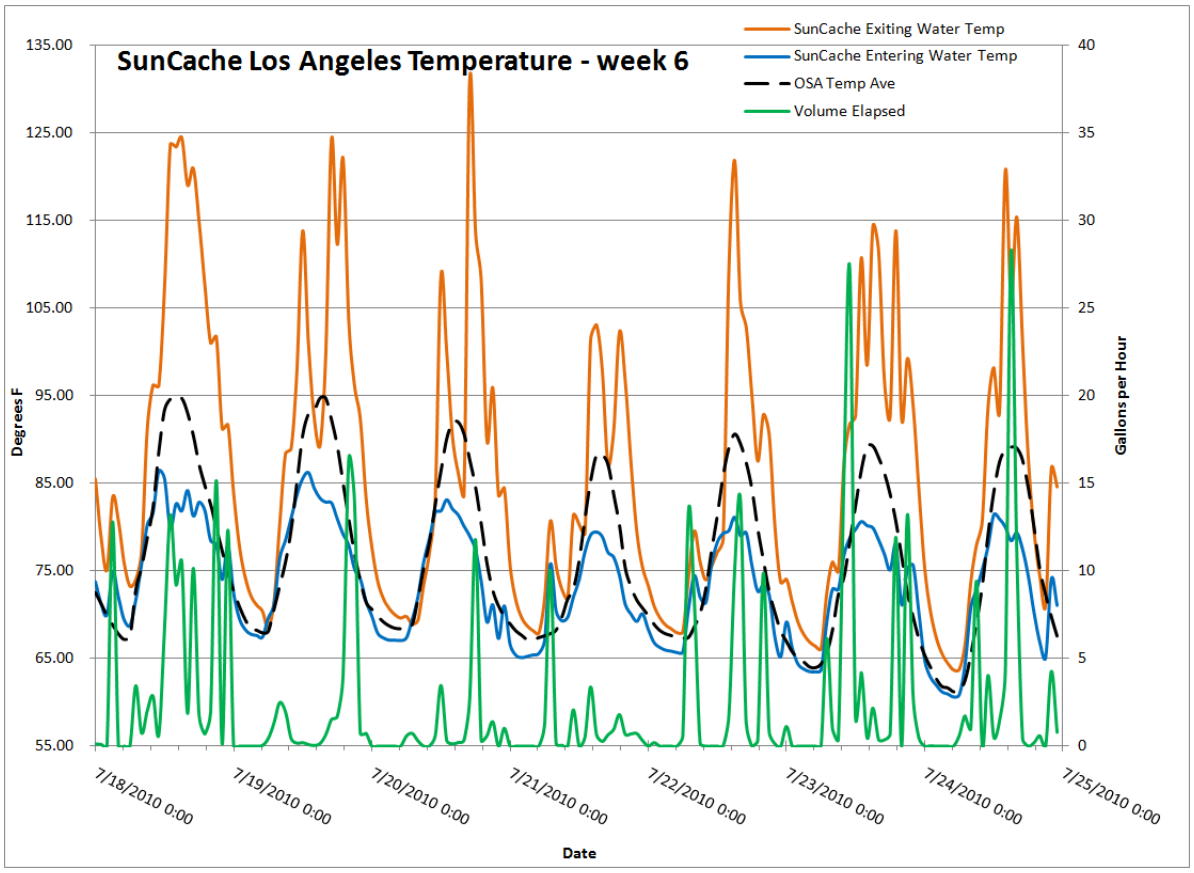

Figure 7-4: Los Angeles – Temperatures & Flow in Summer Month

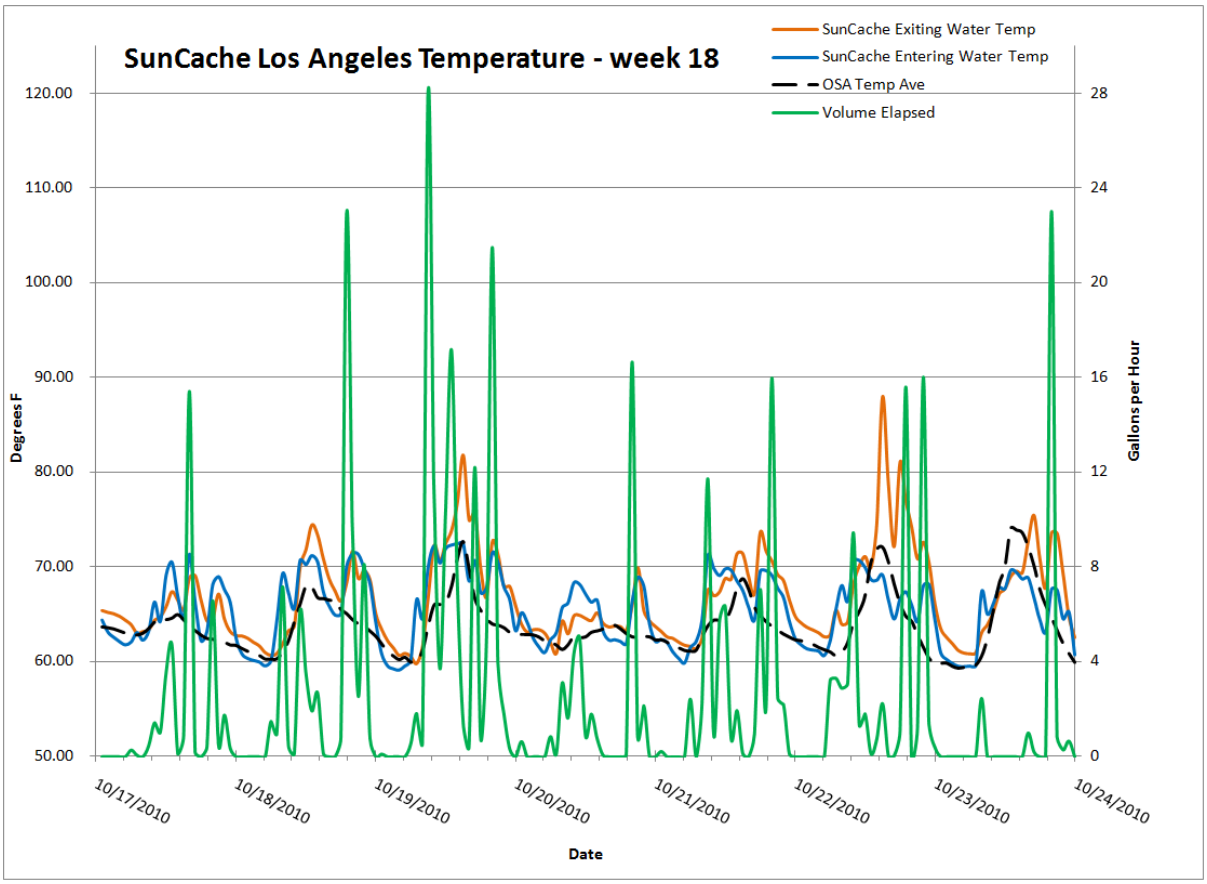

Figure 7-5: Los Angeles – Temperatures & Flow in Fall Month

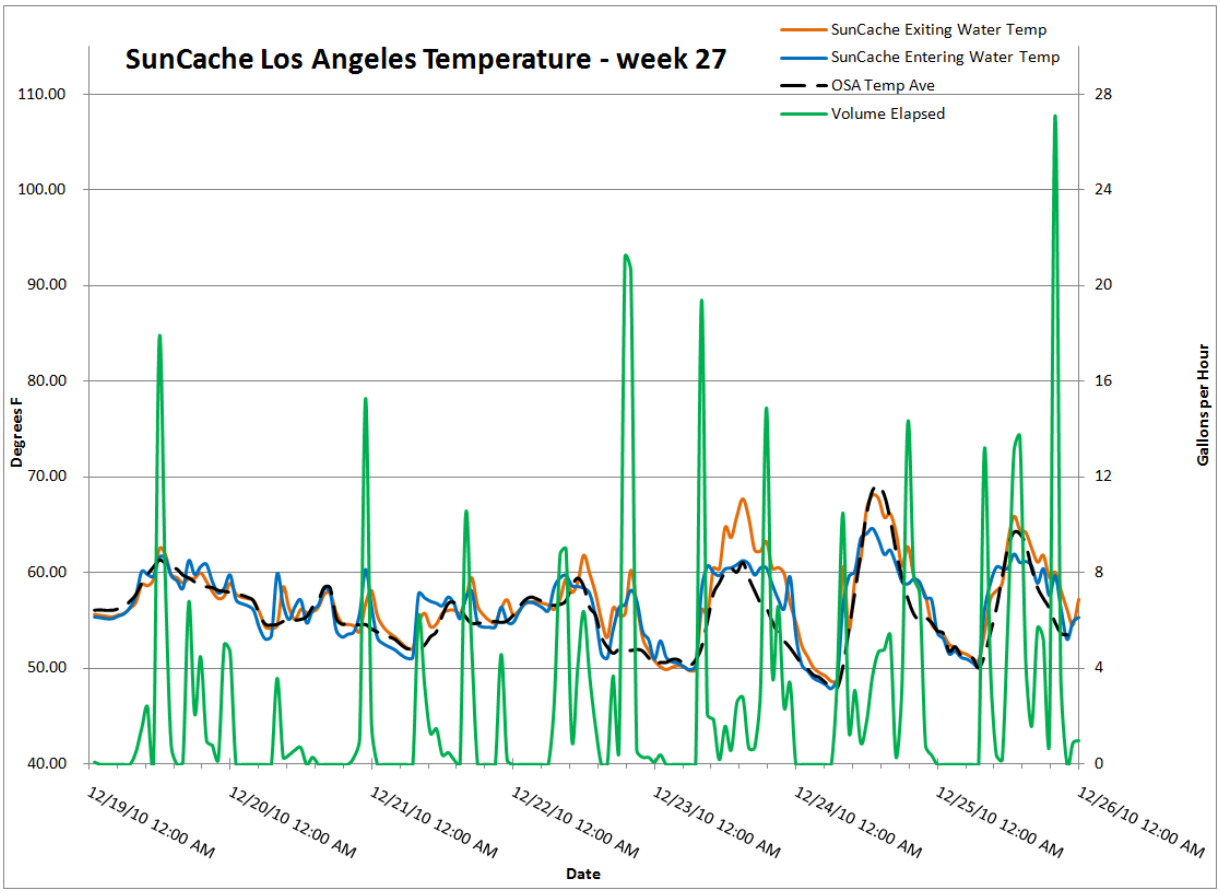

Figure 7-6: Los Angeles – Temperatures & Flow in Winter Month

When referring to the figures on the previous pages, please note that the orange line (SunCache Exit Temperature) and the blue line (SunCache Entrance Temperature) tend to converge at some point approaching the outside air temperature when there has not been any water flow for a period of time. Since the water in the pipes gradually comes to equilibrium with the air when not flowing, the temperature probes are reporting this (outside air) temperature. This does not negatively affect the data collection since energy is only recorded when water is being used. The peaks in the green line indicate instances of hot water consumption by the residents. Except once, at each instance of water consumption we note that the orange line is higher than the blue line, indicating a net positive energy transfer and therefore a benefit to the homeowner. Please note that delta T does in fact drop below zero, but none of these minimums occur at the same time as water being consumed so they do not detract from performance of the SunCache device.

Natural gas savings are calculated by applying an Energy Factor to the total elapsed energy transfer in the SunCache collector. The Energy Factor represents the efficiency of a typical residential water heater; in this case we use an Energy Factor of 50%. Any energy transfer in the SunCache directly offsets energy that would have otherwise been used by the water heater. Combustion of natural gas releases certain emissions (greenhouse gasses); by offsetting a portion of the natural gas that would have been used for domestic water heating, the SunCache array causes greenhouse gas emissions to be offset. Daily and monthly reductions in selected greenhouse gas emissions over the entire test period are presented in the Appendix. Outside air temperature and solar insolation data is also being collected as part of the study. Results are presented in MS Excel Format.

Emissions of CO, NOx, SOx, TOG, and PM are being tracked, as well as Carbon Dioxide Equivalent (CO_2e). All emissions are being reported in pounds, and are calculated as direct combustion emissions only, no direct fugitive emissions from the pipeline network are included in these calculations. Emission factors are based on the US EPA's AP-42, they are as follows (in units of pounds per million cubic feet of natural gas consumed): Carbon Monoxide – 40, NOx – 94, SOx – 0.6, TOG – 11, PM – 7.6 with an emission factor of 53.072 kg/MMBtu for Carbon Dioxide Equivalent as provided by the California ARB for this purpose.

At the Los Angeles test site several parameters were measured, including SunCache solar collector entrance and exiting water temperatures as well as hot water consumption. The BTU meter integrates these sensors and performs calculations to directly report energy transfer to the water. Based on the measured data, over the test period from 6/14/2010 to 1/31/2011 we can conclude that there has been a net energy savings from the use of a SunCache solar collector at this location. Using an energy factor of 50% to represent the efficiency of an average residential water heating appliance this test site would see a natural gas savings of 23.4 therms over the test period of 214 days. These results are typical of those found at the other test sites.

San Luis Obispo

San Luis Obispo is one of the streamlined single-family residential sites. The single BTU meter is installed on the domestic water heating system in such a way that it measures the flow of water through the SunCache array. Data collection at this site began on May 27th 2010. These data have been analyzed to ascertain the benefit of using the SunCache solar collector for the typical homeowner in southern-central California. This study aims to find out under what circumstances the SunCache solar collector can offset consumption of natural gas that would have otherwise have been used for domestic water heating, and also to quantify that natural gas offset. Secondary goals include quantifying the airborne emission reductions attributable to SunCache and tracking data on residential use of domestic hot water. On the following pages the findings of this report as they relate to the San Luis Obispo test site will be presented. Typical weeks and months of data will be presented in this section; complete data sets are included as an appendix to this report.

Please see Figure 8-1, below for a line diagram showing the meter placement and the building's hot water plumbing. Table 8-1 on the following page shows summarized monthly information from this test site.

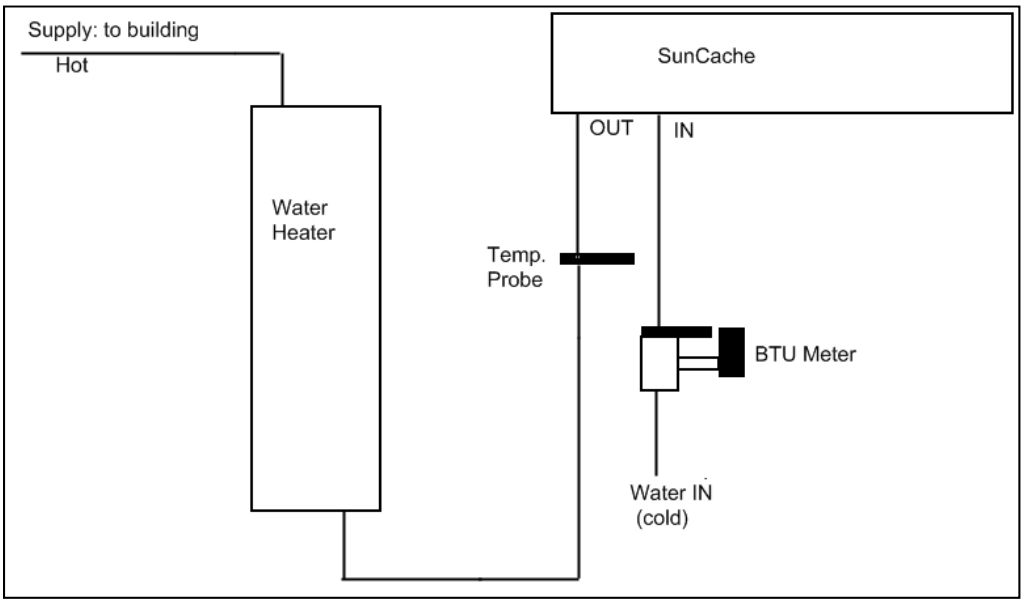

Figure 8-1: San Luis Obispo – Plumbing Diagram

Table 6-1: SunCache Parameters by Month

San Luis Obispo			
2	Days	Gallons	Therms Gas Saved
June	31	1,099	2.2
July	31	1,091	2.0
August	31	827	1.7
September	30	877	1.8
October	31	1,019	1.2
November	30	935	0.9
December	31	962	0.5
January	31	1,318	1.6
TOTALS	**246**	**8,129**	**11.8**
Avg. Monthly Therms saved			**1.4**
Avg. Monthly Therms saved per Gal			**0.00146**
Therms Saved per person per day			**0.024**

The water consumption figure is measured directly by the BTU meter. Total elapsed BTU is calculated onboard the BTU meter. To convert from BTU to therms we use the conversion factor of 100,000 BTU per therm. To calculate the natural gas saved we apply an Energy Factor to the elapsed therms figure. The Energy Factor represents the efficiency of a typical residential water heater. For San Luis Obispo we use an Energy Factor of 50%. To calculate the volume of the natural gas offset we use an average higher heating value (HHV) of 1,030 BTU per cubic foot. Please see Figures 8-2 below, and 8-3 on the following page for graphs of a sample month's water consumption and useful energy transfer in the SunCache solar collector respectively.

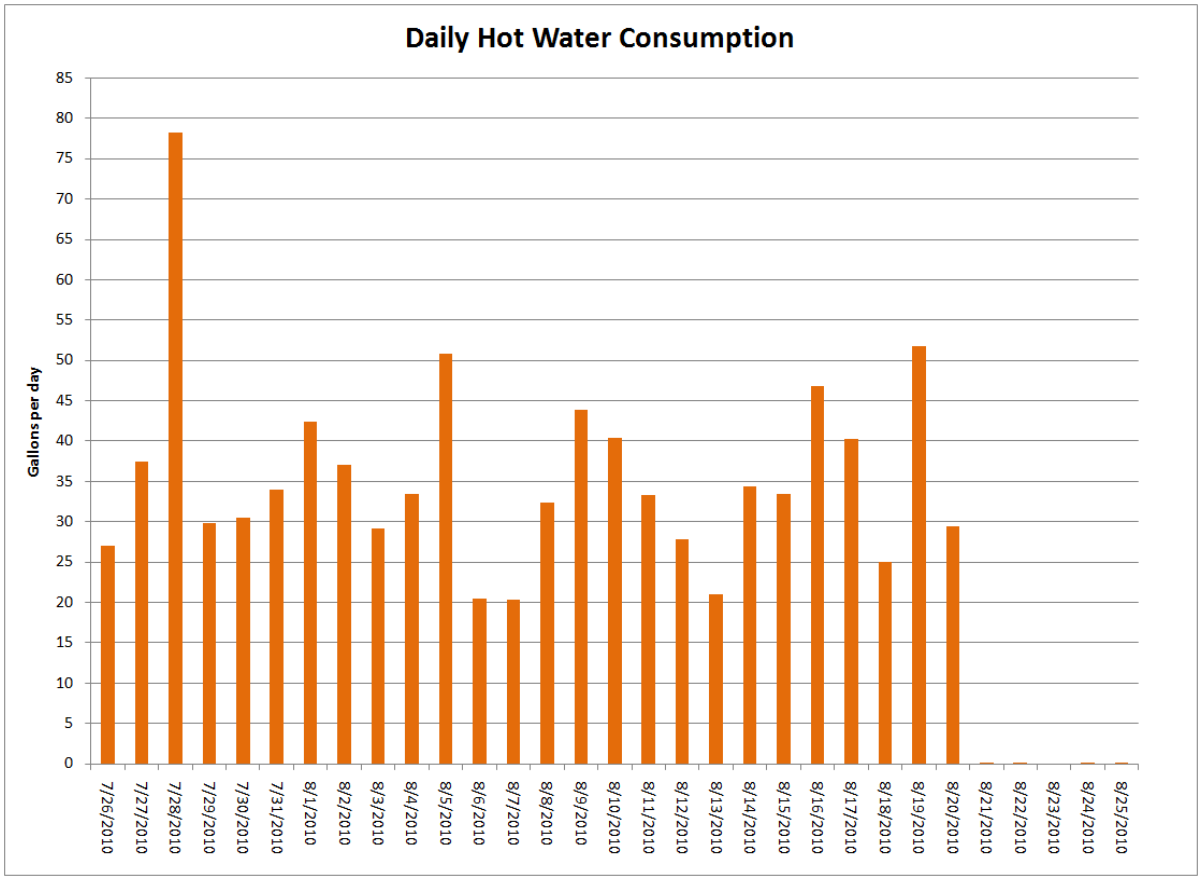

Figure 8-2: San Luis Obispo – Daily Domestic Hot Water Consumption

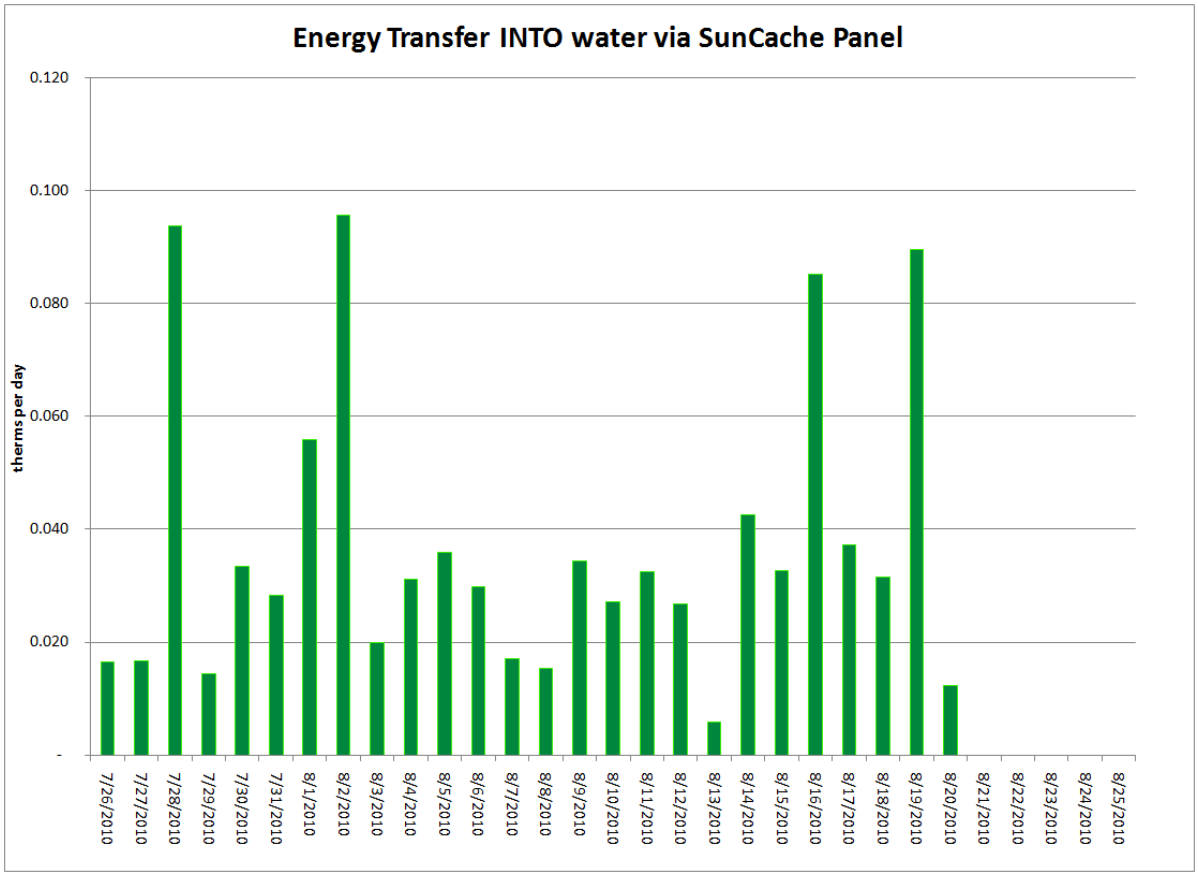

Figure 8-3: San Luis Obispo – Daily Energy Transfer into Water via SunCache Panel

When comparing hot water consumption to energy transfer, there are some obvious similarities, but the two graphs are not identical. To explain why, it helps to consider the time of day that the water consumption occurred: water consumed early in the morning exits the SunCache at a colder temperature and therefore has not increased in energy compared to the water entering the house. Water drawn later in the day or in the evening, after the SunCache has been warmed in the sun, exits the solar collector at a higher temperature than the water entering the house; and therefore has offset some of the energy that would have been used by the natural gas water heater to heat the water to the desired set-point. Interesting statistics on water use and time of day are shown in Table 8-2 below. Energy transfer and time of day are covered in Table 8-3 below. The data used in Tables 7-3 and 7-4 was collected in the summer season.

Table 8-2: San Luis Obispo – Water Consumption & Time of Day (below left)

Table 8-3: San Luis Obispo – SunCache Energy Transfer & Time of Day (below right)

Monthly % of Hot Water Consumption	
Midnight - 6:00AM	0%
6:00AM - Noon	62%
Noon - 6:00PM	20%
6:00PM - Midnight	18%

Monthly % of Suncache Energy Consumption	
Midnight - 6:00AM	0%
6:00AM - Noon	27%
Noon - 6:00PM	41%
6:00PM - Midnight	31%

Please see Figures 8-4 through 8-6 on the following pages for graphs of a typical week of temperature data from the San Luis Obispo test site in the summer, fall and winter seasons respectively. Water flow data is included to illustrate when water is moving vs. stagnant water in the pipes.

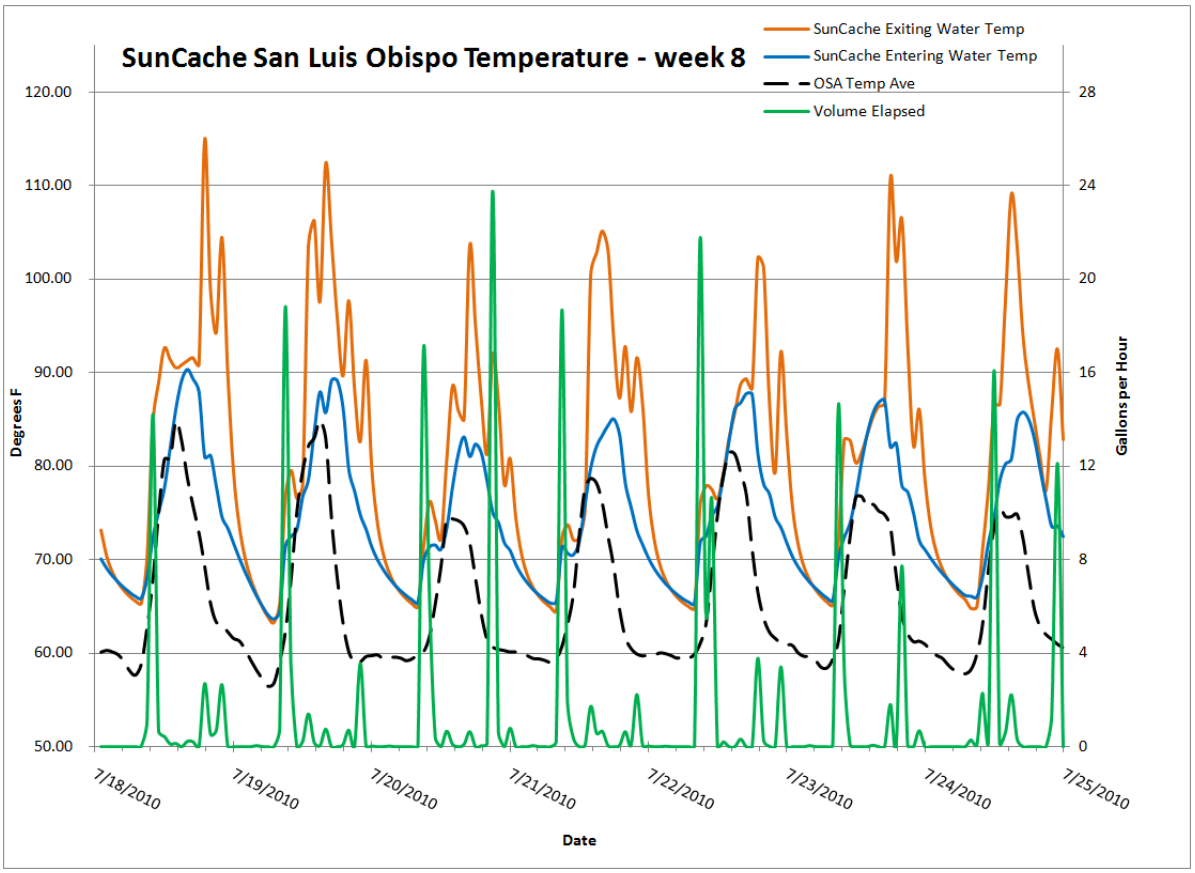

Figure 8-4: San Luis Obispo – Temperatures & Flow in Summer Month

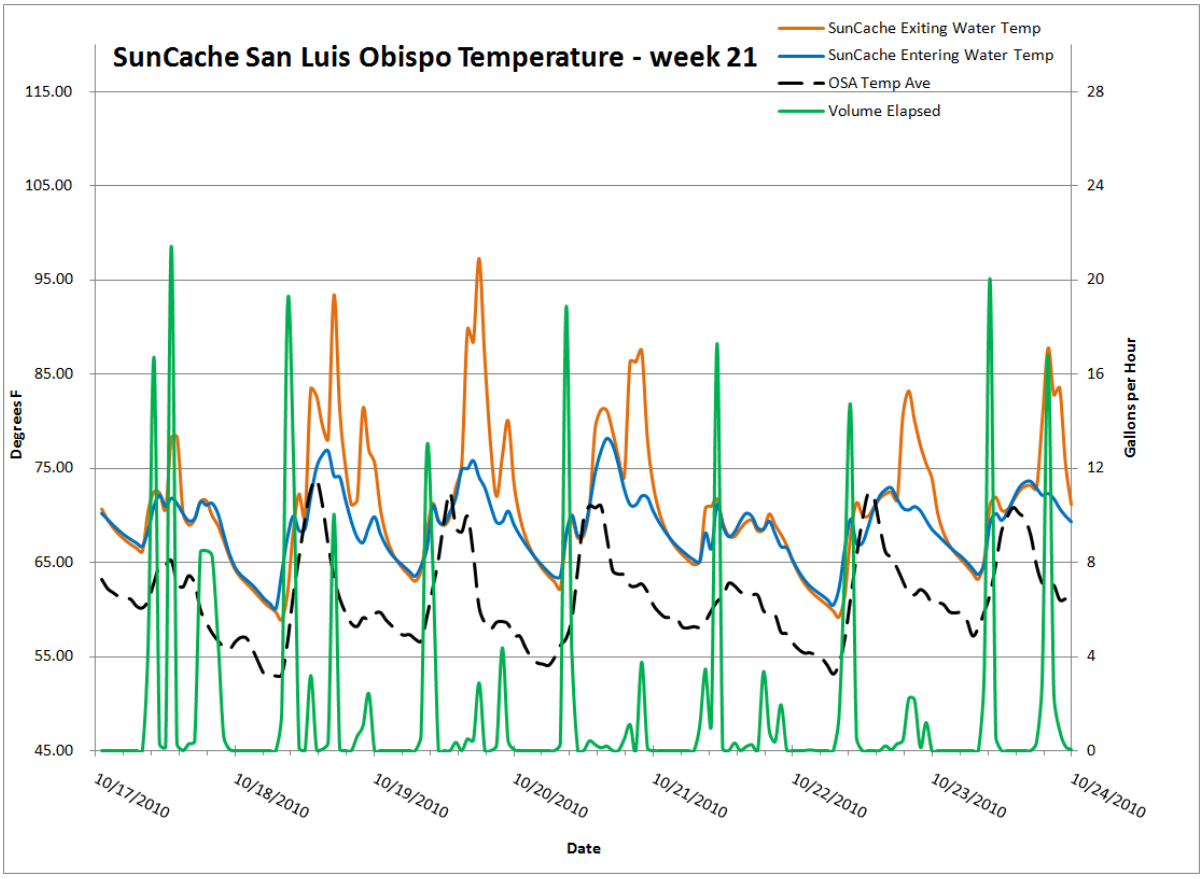

Figure 8-5: San Luis Obispo – Temperatures & Flow in Fall Month

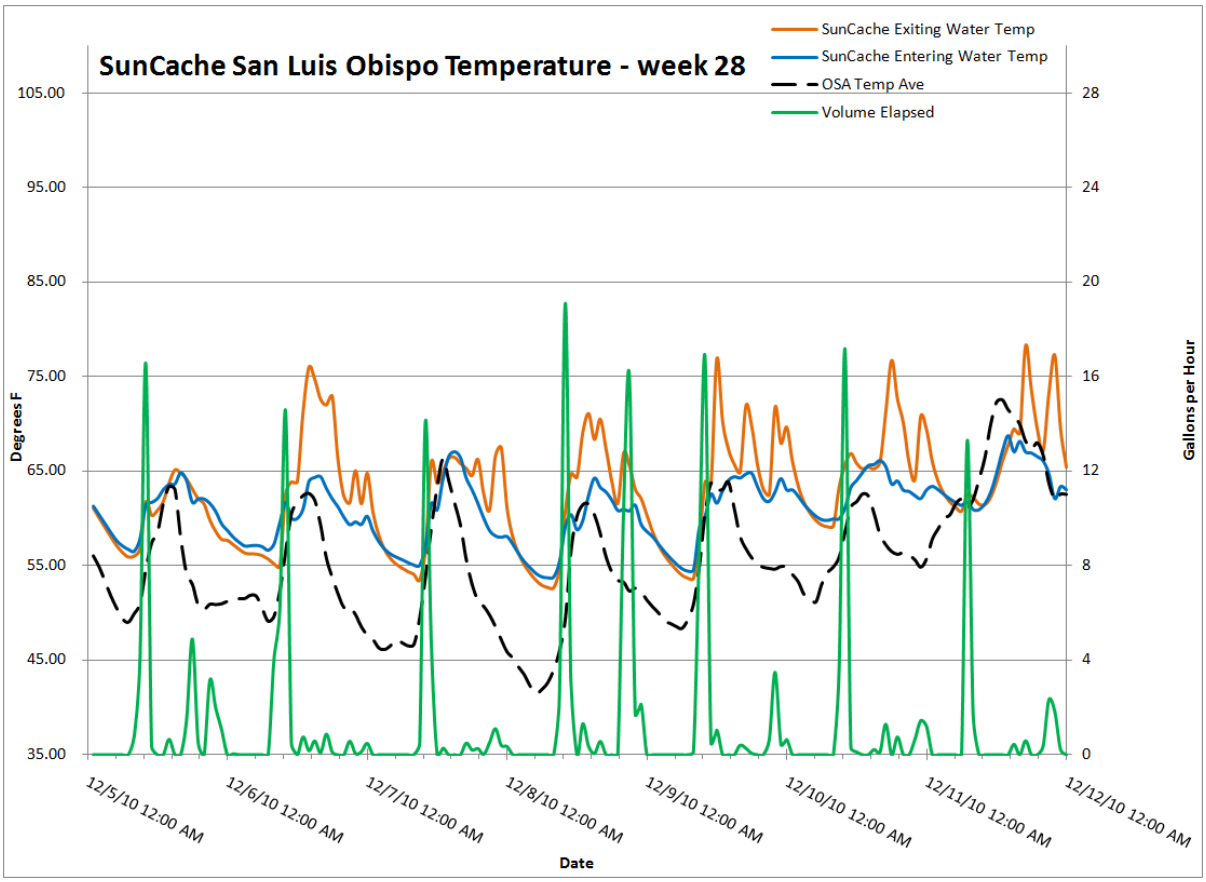

Figure 8-6: San Luis Obispo – Temperatures & Flow in Winter Month

When referring to the figures above and on the previous page, please note that the orange line (SunCache Exit Temperature) and the blue line (SunCache Entrance Temperature) tend to converge at some point approaching the outside air temperature when there has not been any water flow for a period of time. Since the water in the pipes gradually comes to equilibrium with the air inside the unheated garage when not flowing, the temperature probes are reporting this (air) temperature. This does not negatively affect the data collection since energy transfer is only recorded when water is being used. The peaks in the green line indicate instances of hot water consumption by the residents. At each instance of water consumption we note that the orange line is higher than the blue line, indicating a net positive energy transfer and therefore a benefit to the homeowner. Please note that delta T does in fact drop below zero, but none of these minimums occur at the same time as water being consumed so they do not detract from performance of the SunCache device.

Natural gas savings are calculated by applying an Energy Factor to the total elapsed energy transfer in the SunCache collector. The Energy Factor represents the efficiency of a typical residential water heater; in this case we use an Energy Factor of 50%. Any energy transfer in the SunCache directly offsets energy that would have otherwise been used by the water heater. Combustion of natural gas releases certain emissions (greenhouse gasses); by offsetting a portion of the natural gas that would have been used for domestic water heating, the SunCache array causes greenhouse gas emissions to be offset. Daily and monthly reductions in selected greenhouse gas emissions over the entire test period are presented in the Appendix. Outside air

temperature and solar insolation data is also being collected as part of the study. Results are presented in MS Excel Format.

Emissions of CO, NOx, SOx, TOG, and PM are being tracked, as well as Carbon Dioxide Equivalent (CO_2e). All emissions are being reported in pounds, and are calculated as direct combustion emissions only, no direct fugitive emissions from the pipeline network are included in these calculations. Emission factors are based on the US EPA's AP-42, they are as follows (in units of pounds per million cubic feet of natural gas consumed): Carbon Monoxide – 40, NOx – 94, SOx – 0.6, TOG – 11, PM – 7.6 with an emission factor of 53.072 kg/MMBtu for Carbon Dioxide Equivalent as provided by the California ARB for this purpose.

At the San Luis Obispo test site several parameters were measured, including SunCache solar collector entrance and exiting water temperatures as well as hot water consumption. The BTU meter integrates these sensors and performs calculations to directly report energy transfer to the water. Based on the measured data, over the test period from 5/27/2010 to 1/31/2011 we can conclude that there has been a net energy savings from the use of a SunCache solar collector at this location. Using an energy factor of 50% to represent the efficiency of an average residential water heating appliance this test site would see a natural gas savings of 11.8 therms over the test period of 246 days. These results are typical of those found at the other test sites.

Los Osos

Los Osos is one of the streamlined single-family residential sites. The single BTU meter is installed on the domestic water heating system in such a way that it measures the flow of water through the SunCache array. Data collection at this site began on May 27th, 2010. These data have been analyzed to ascertain the benefit of using the SunCache solar collector for the typical homeowner in southern-central California. This study aims to find out under what circumstances the SunCache solar collector can offset consumption of natural gas that would have otherwise have been used for domestic water heating, and also to quantify that natural gas offset. Secondary goals include quantifying the airborne emission reductions attributable to SunCache and tracking data on residential use of domestic hot water. On the following pages the findings of this report as they relate to the Los Osos test site will be presented. Typical weeks and months of data will be presented in this section; complete data sets are included as an appendix to this report.

Please see Figure 9-1, on the following page for a line diagram showing the meter placement and the building's hot water plumbing. Table 6-1 shows summarized monthly information from this test site.

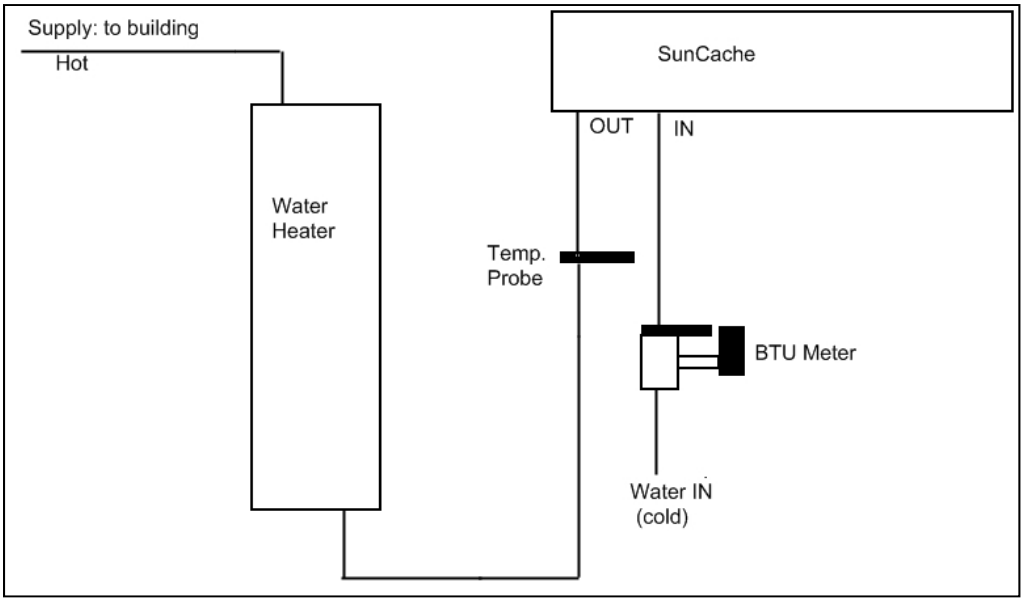

Figure 9-1: Los Osos – Plumbing Diagram

Table 9-1: SunCache Parameters by Month

Los Osos			
4	Days	Gallons	Therms Gas Saved
June	31	816	2.3
July	31	854	1.9
August	31	885	2.2
September	15	587	1.5
October	20	700	0.7
November	30	2,746	4.1
December	31	2,698	2.5
January	31	3,076	5.4
TOTALS	**220**	**12,361**	**20.6**
Avg. Monthly Therms saved			**2.8**
Avg. Monthly Therms saved per Gal			**0.00167**
Therms Saved per person per day			**0.023**

The water consumption figure is measured directly by the BTU meter. Total elapsed BTU is calculated onboard the BTU meter. To convert from BTU to therms we use the conversion factor of 100,000 BTU per therm. To calculate the natural gas saved we apply an Energy Factor to the elapsed therms figure. The Energy Factor represents the efficiency of a typical residential water heater. For Los Osos we use an Energy Factor of 50%. In order to calculate the volume of the natural gas offset we use an average higher heating value (HHV) of 1,030 BTU per cubic foot. Please see Figures 9-2 and 9-3, on the following page for graphs of a typical month's water consumption and useful energy transfer in the SunCache solar collector respectively.

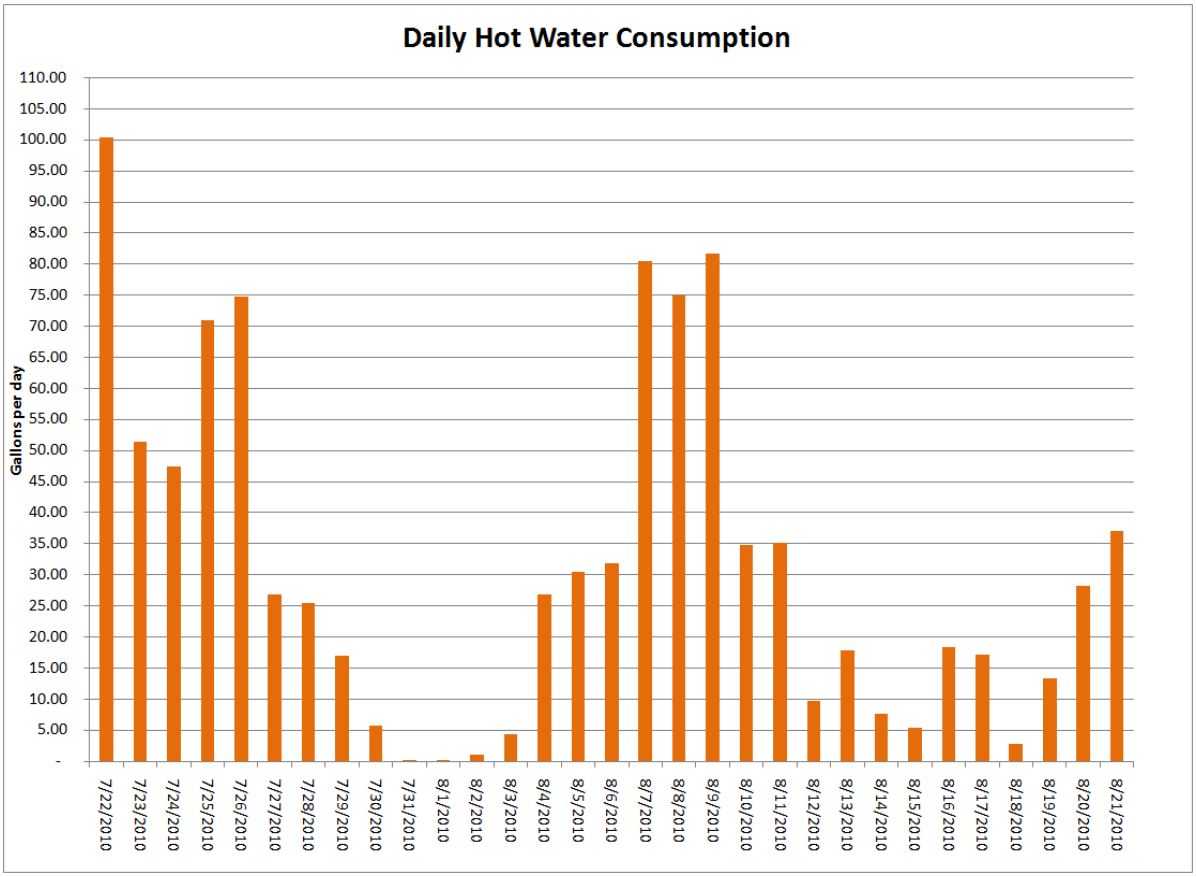

Figure 9-2: Los Osos – Daily Domestic Hot Water Consumption

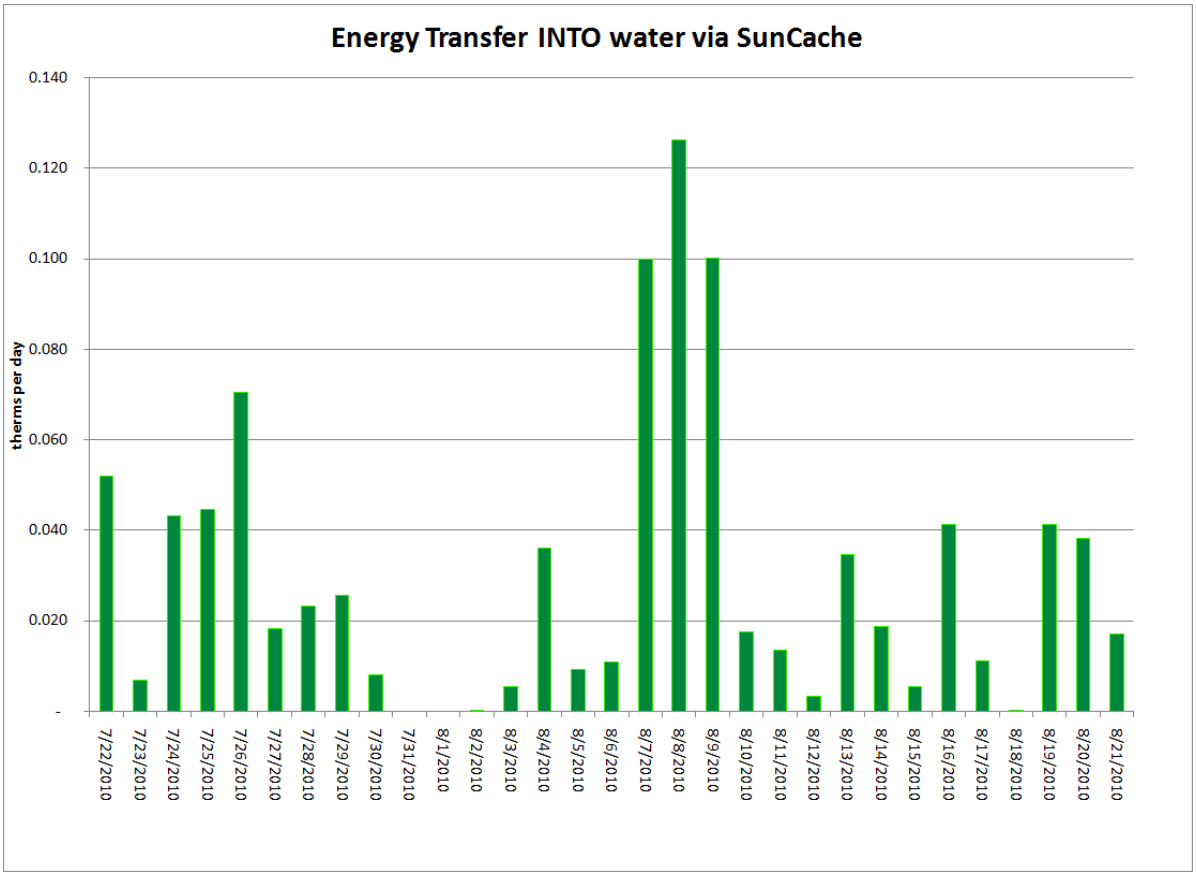

Figure 9-3: Los Osos – Daily Energy Transfer into Water via SunCache Panel

When comparing hot water consumption to energy transfer, there are some obvious similarities, but the two graphs are not identical. To explain why, it helps to consider the time of day that the water consumption occurred: water consumed early in the morning exits the SunCache at a colder temperature and therefore has not increased in energy compared to the water entering the house. Water drawn later in the day, after the SunCache has been warmed in the sun, exits the solar collector at a higher temperature than the water entering the house; and therefore has offset some of the energy that would have been used by the natural gas water heater to heat the water to the desired set-point. Interesting statistics on water use and time of day are shown in Table 9-2 below. Energy transfer and time of day are covered in Table 9-3 below. The data used in Tables 9-2 and 9-3 was collected in the summer season.

Table 9-2: Los Osos – Water Consumption & Time of Day (below left)

Table 9-3: Los Osos – SunCache Energy Transfer & Time of Day (below right)

Monthly % of Hot Water Consumption	
Midnight - 6:00AM	8%
6:00AM - Noon	55%
Noon - 6:00PM	15%
6:00PM - Midnight	22%

Monthly % of Suncache Energy Consumption	
Midnight - 6:00AM	1%
6:00AM - Noon	40%
Noon - 6:00PM	26%
6:00PM - Midnight	33%

Please see Figures 9-4 through 9-6 on the following pages for graphs of a typical week of temperature data from the Los Osos test site in the summer, fall and winter seasons respectively. Water flow data is included to illustrate when water is moving vs. stagnant water in the pipes.

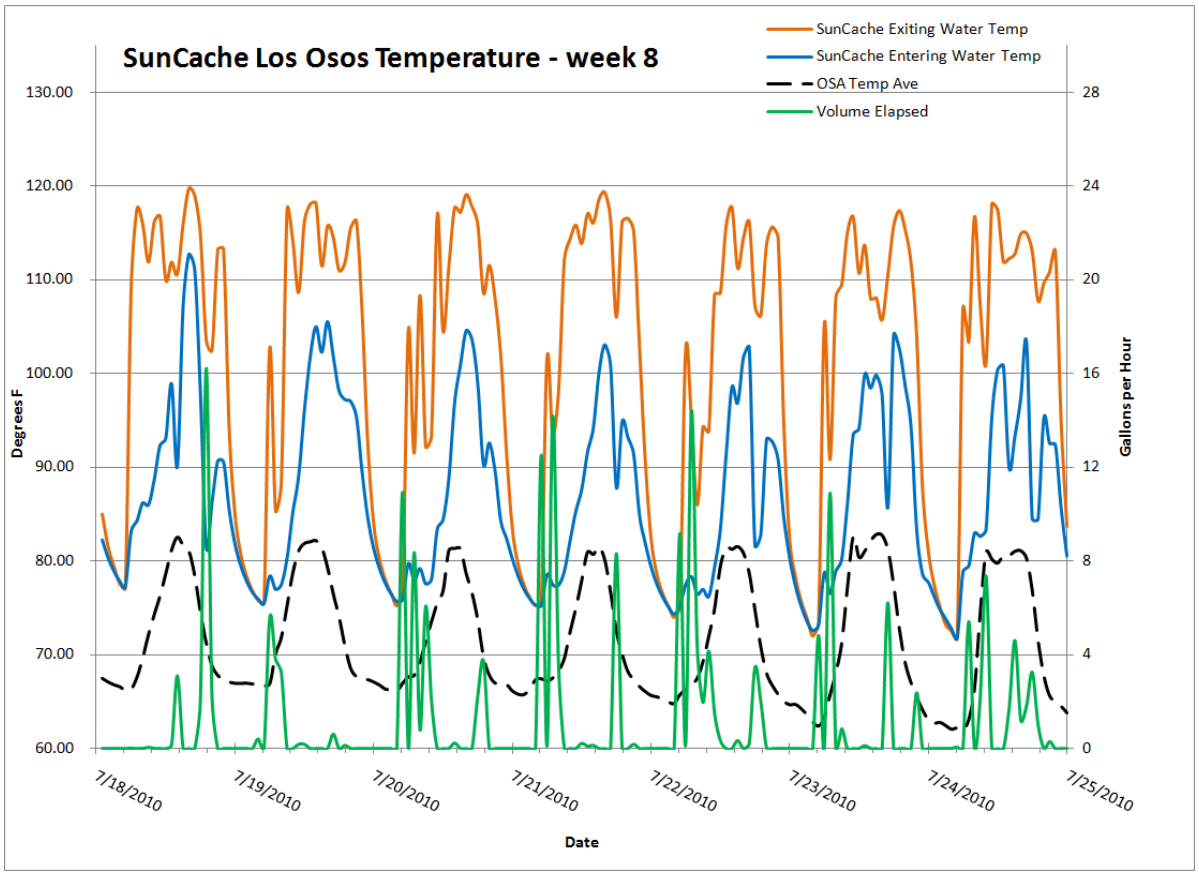

Figure 9-4: Los Osos – Temperatures & Flow in Summer Month

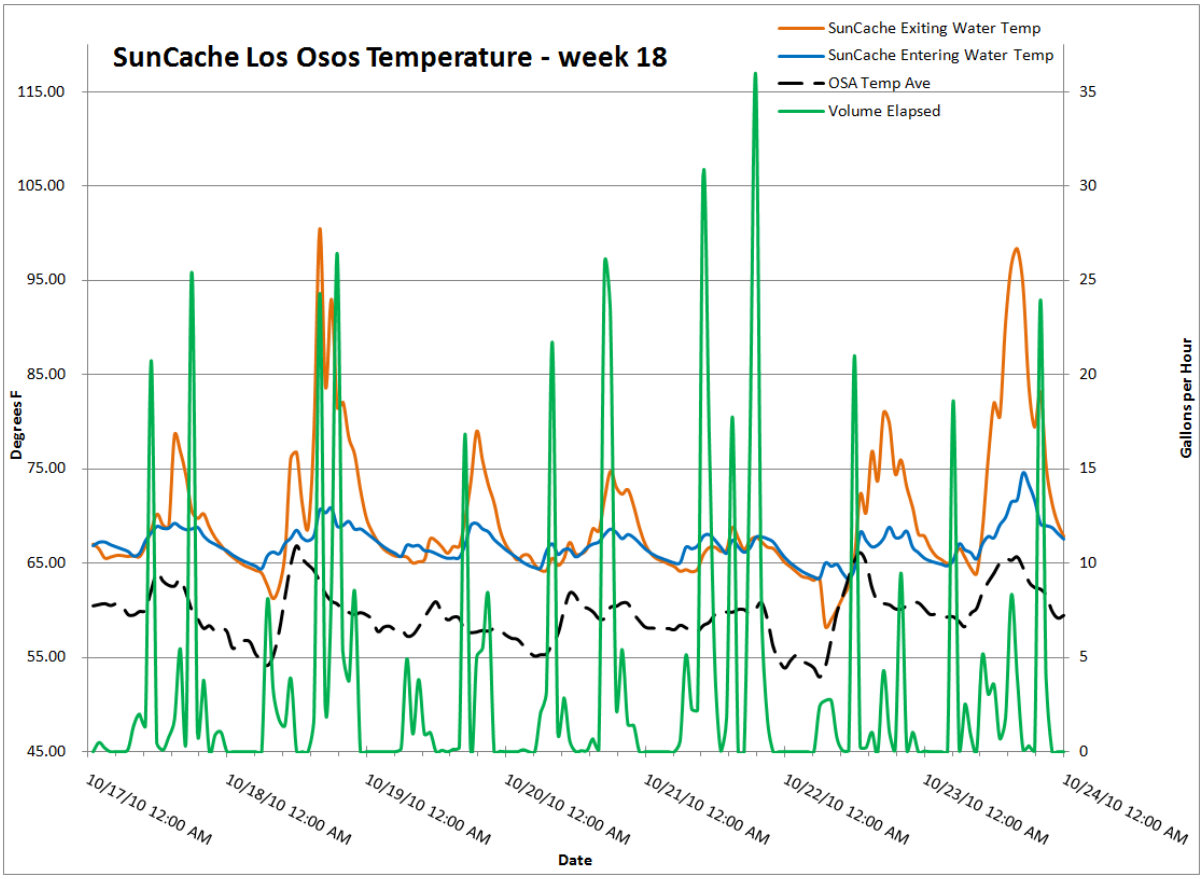

Figure 9-5: Los Osos – Temperatures & Flow in Fall Month

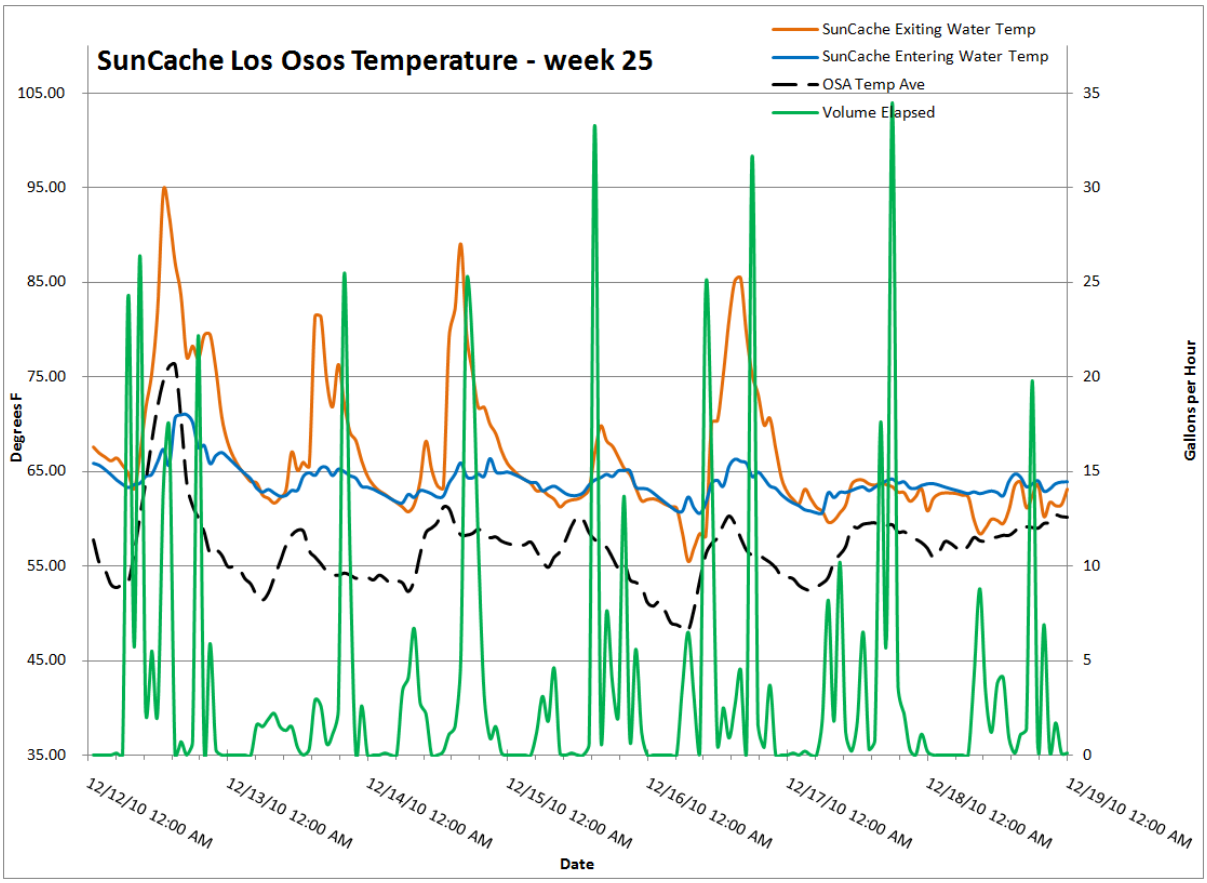

Figure 9-6: Los Osos – Temperatures & Flow in Winter Month

When referring to the figures on the previous pages, please note that the orange line (SunCache Exit Temperature) and the blue line (SunCache Entrance Temperature) tend to converge at some point a bit warmer than the outside air temperature when there has not been any water flow for a period of time. Since the water in the pipes gradually comes to equilibrium with the air inside the garage when not flowing, the temperature probes are reporting this (air) temperature. This does not negatively affect the data collection since energy is only recorded when water is being used. The peaks in the green line indicate instances of hot water consumption by the residents. At each instance of water consumption we note that the orange line is higher than the blue line, indicating a net positive energy transfer and therefore a benefit to the homeowner. Please note that delta T does in fact drop below zero, but none of these minimums occur at the same time as water being consumed so they do not detract from performance of the SunCache device.

Natural gas savings are calculated by applying an Energy Factor to the total elapsed energy transfer in the SunCache collector. The Energy Factor represents the efficiency of a typical residential water heater; in this case we use an Energy Factor of 50%. Any energy transfer in the SunCache directly offsets energy that would have otherwise been used by the water heater. Combustion of natural gas releases certain emissions (greenhouse gasses); by offsetting a portion of the natural gas that would have been used for domestic water heating, the SunCache array causes greenhouse gas emissions to be offset. Daily and monthly reductions in selected greenhouse gas emissions over the entire test period are presented in the Appendix. Outside air temperature and solar insolation data is also being collected as part of the study. Results are presented in MS Excel Format.

Emissions of CO, NOx, SOx, TOG, and PM are being tracked, as well as Carbon Dioxide Equivalent (CO_2e). All emissions are being reported in pounds, and are calculated as direct combustion emissions only, no direct fugitive emissions from the pipeline network are included in these calculations. Emission factors are based on the US EPA's AP-42, they are as follows (in units of pounds per million cubic feet of natural gas consumed): Carbon Monoxide – 40, NOx – 94, SOx – 0.6, TOG – 11, PM – 7.6 with an emission factor of 53.072 kg/MMBtu for Carbon Dioxide Equivalent as provided by the California ARB for this purpose.

At the Los Osos test site several parameters were measured, including SunCache solar collector entrance and exiting water temperatures as well as hot water consumption. The BTU meter integrates these sensors and performs calculations to directly report energy transfer to the water. Based on the measured data, over the test period from 5/27/2010 to 1/31/2011 we can conclude that there has been a net energy savings from the use of a SunCache solar collector at this location. Using an energy factor of 50% to represent the efficiency of an average residential water heating appliance this test site would see a natural gas savings of 20.6 therms over the test period of 220 days. These results are typical of those found at the other test sites.

Conclusions

It is apparent from all sites where monitoring has been conducted that the SunCache solar hot water system has met or exceeded initial expectations. On average the SunCache system has been able to reduce 0.03 Therms of natural gas consumption per building occupant per day in single family homes. This provides not only a net benefit to building owners in the form of reduced natural gas consumption, but also significantly reduces green house gas emissions across both types of residential sites.

The SunCache system's performance was weakest in the early morning hours and late night when solar radiation is at its low point. Therefore, one could conclude that the system's benefits would be reduced during the shorter days in the winter months. Year round data collection will be able to illustrate the actual reduction in performance.

Also of note is that the geographic location within the test area had far less effect on the system's performance than the time of day that water was used. This makes the SunCache system ideally suited for the target area, regardless of geographic location. As expected our data did show higher productivity in the warmest inland climates compared to the cooler coastal climate, but this effect was minimal.

In winter months with fewer hours of sunlight each day the overall effectiveness of the SunCache collector was diminished, however not to the point that it would be advised to take it out of service. In all cases the use of a SunCache collector was a net positive benefit to the building owner.

The SunCache collector's benefits were greatly increased as the occupant level and housing density increased. This makes sense when one considers that with increased use comes increased savings. Furthermore, this makes the SunCache product ideally suited for larger multi-family residential housing units where water consumption is high. SunCache collectors can be linked to create arrays of various sizes as needed. Additional savings could be obtained through behavior changes by the occupants such as bathing and doing laundry in afternoon and evening hours.

In conclusion IES feels that the data we have received at this point shows that the SunCache solar collector does in fact provide a benefit to residential building owners both in reduction of natural gas bills for DHW heating, and in reduction of greenhouse gas emissions. Performance in summer months was much better than in winter months.