DEMONSTRATION OF OSCILLATING COMBUSTION ON A HIGH TEMPERATURE FORGING FURNACE

FINAL REPORT

for

CALIFORNIA AIR RESOURCES BOARD
and
CALIFORNIA ENVIRONMENTAL PROTECTION AGENCY

INNOVATIVE CLEAN AIR TECHNOLOGY PROGRAM
Grant No. ICAT99-1

GTI Project No. 40444

Prepared by

John C. Wagner

Gas Technology Institute

August 2001

DISCLAIMER

The statements and conclusions in this Report are those of the contractor and not necessarily those of the California Air Resources Board. The mention of commercial products, their source, or their use in connection with material reported herein is not to be construed as actual or implied endorsement of such products.

ACKNOWLEDGMENTS

GTI wishes to thank the following for their contributions to this project: Ms. Annmarie Mora and Mr. Richard Vincent of the California Air Resources Board, Mr. Isaac Chan and Mr. Steven Sikirica of the Gas Research Institute, Mr. Richard Biljetina and Mr. Vincent Fiore of the GTI Sustaining Membership Program, and Mr. Henry Mak and Mr. Cherif Youssef of Southern California Gas Co., for funding of the project; Mr. Steve Makepeace and Mr. Peter J. Nash of Shultz Steel Company for providing the test furnace and installing the retrofit system; Dr. Fred Clark of CeramPhysics, Inc. for development of the SSP valve; Mr. Gordon Dickinson of Zedtec Combustion System, Inc. for providing the burner used for the laboratory testing; and Hamid Abbasi, Jacque Binge, Matthew Fayerman, Kurt Johnson, Kenneth Kozlar, Alexander Kozlov, Harry Kurek, Walter Kunc, Jeff Mainzer, Brian Masterson, and Serguei Nester of the GTI Combustion Group for their technical support.

This Report was submitted in fulfillment of ICAT99-1 "Demonstration of Oscillating Combustion on a High Temperature Forging Furnace" by Gas Technology Institute under partial sponsorship of the California Air Resources Board. Work was completed as of June 30, 2001.

TABLE OF CONTENTS

Section	Page
DISCLAIMER	ii
ACKNOWLEDGMENTS	iii
TABLE OF CONTENTS	iv
LIST OF FIGURES	v
LIST OF TABLES	vi
ABSTRACT	vii
EXECUTIVE SUMMARY	viii
INTRODUCTION	1
BACKGROUND	4
Oscillating Combustion Process Development	4
Oscillating Valve Development	5
Prior Relevant Work	6
PROJECT OBJECTIVE	9
MATERIALS AND METHODS	10
Technical Approach	10
Facilities And Equipment	11
GTI Combustion Laboratory	11
GTI Instrumentation	14
Forging Furnace at Shultz Steel	14
RESULTS AND DISCUSSION	16
Task 1. Retrofit Design	16
Task 2. Setup	24
Task 3. Testing	28
Task 4. Analysis & Reporting	31
CONCLUSIONS	35
RECOMMENDATIONS	37
STATUS OF COMMERCIALIZATION PLAN	38
REFERENCES	39
GLOSSARY	40

LIST OF FIGURES

Figure		Page
1	Oscillating Combustion Concept	2
2	Effect of Stoichiometry on NO_x	2
3	CeramPhysics SSP Valve Concept	6
4	Prototype CeramPhysics SSP Valve Installed on GTI's Test Furnace	6
5	CeramPhysics Model 7 SSP Valve Design	7
6	Laboratory Results for Zedtec Regenerative Burner	7
7	Overall View of the GTI's Portable High-Temperature Bench-Scale Test Furnace	12
8	Cross-Sectional View of the GTI Portable High-Temperature Bench-Scale Test Furnace	13
9	Car Bottom Forging Furnace with Regenerative Burners	14
10	Locations of Holes in GTI's Test Furnace for Insertion and Extraction of Titanium Samples	16
11	Metal Sample Inserted into GTI's Furnace	17
12	Metal Sample After Removal from Furnace	18
13	CeramPhysics Model 7E SSP Valve	20
14	Mock-Up of Piping and Constraints	21
15	Previously Used Piping Layout which Serve as a Basis for the Retrofit Installation Design	21
16	Final Design of the oscillating valve Pipe Trains for the Retrofit Installation Design	22
17	Air Supply, Fuel Supply, and Air-Fuel Ratio Subsystems	23
18	GTI CEM and Temperature Instrumentation Installed Inside Trailer	25
19	Typical Downstream Gas Pressure Wave from Oscillating Valve	26
20	Oscillating Valve Train	26
21	Oscillating Valve Control System	26
22	Retrofit Air-Fuel Ratio Subsystem	27
23	Original Baseline	31
24	NO_x Reduction With High Excess Air	33
25	NO_x Reduction With Low Excess Air	33

LIST OF TABLES

Table		Page
1	Parameters Used for Oscillating Combustion	3
2	List of Parameters Controlled and Monitored During Oscillating Combustion Testing	11
3	GTI Furnace Monitoring Equipment	12
4	Titanium Sample Analysis	18

ABSTRACT

An innovative, low-cost technology, Oscillating Combustion, was field demonstrated on a car bottom forging furnace and was found to be able to reduce NO_x emissions by up to 49% and reduce fuel usage by up to 3%. Oscillating Combustion involves the creation of successive fuel-rich and fuel-lean zones within the furnace. This is accomplished by installing an oscillating valve on the fuel line to each the burner of a furnace. Since combustion under both fuel-rich and fuel-lean conditions produces low levels of NO_x, the NO_x formed in each zone is significantly lower than that which would occur if the combustion took place without fuel oscillation but at the same overall average fuel flow rate. Additionally, the increased flame luminosity resulting from the fuel-rich combustion zones combined with the increased turbulence created by the flow oscillations provides increased heat transfer to the furnace load. The technology is applicable to a wide range of high-temperature industrial furnaces such as forging furnaces, glass melters, steel reheat furnaces, aluminum melters, and process heaters, whether they are fired with ambient-temperature air, preheated air, oxygen-enriched air, or oxygen.

EXECUTIVE SUMMARY

Background

The objective of this project was to demonstrate the reduction of emissions and operating costs of a direct-fired industrial forging furnace located in California by improving its combustion performance. The specific objectives were to reduce NO_x emissions by 50% and increase thermal efficiency by 5% while maintaining product quality and temperature uniformity. The results of this project will demonstrate the environmental and cost advantages of this new combustion technology, helping to speed its deployment among the California industrial customer base.

Oscillating Combustion, developed by the Gas Technology Institute (GTI), can meet these emissions and efficiency challenges with low-cost, easily-retrofitted modifications to existing industrial burners and controls. Oscillating Combustion is a simple, innovative, low-cost technology that can be applied to a wide range of high-temperature air/gas- or oxygen/gas-fired industrial process such as forging furnaces, glass melters, steel reheat furnaces, aluminum melters, etc. Laboratory results have shown that NO_x emissions can be reduced by 65% to 90% while simultaneously increasing heat transfer to the load by as much as 10%. To achieve these results, the technology requires only that a new fuel flow control valve be installed on the fuel line ahead of each burner and the gas supply pressure be adjusted appropriately. A custom valve control system is then used to oscillate the air-fuel ratio above and below the stoichiometric ratio, thereby producing alternating fuel-rich and fuel-lean zones in the flame.

Since combustion under both fuel-rich and fuel-lean conditions produces low levels of NO_x, the NO_x formed in each zone is significantly lower than that which would occur if the combustion took place without fuel oscillation but at the same overall average fuel flow rate. When the fuel-rich and fuel-lean zones eventually mix in the furnace, after heat has been transferred from the flame to the load and the flame temperature is lower, the resulting burnout of combustible gases occurs with little additional NO_x formation. Additionally, the increased flame luminosity resulting from the fuel-rich combustion zones combined with the increased turbulence created by the flow oscillations provides increased heat transfer to the furnace load.

Field Testing Results

In this project, a demonstration of the oscillating combustion technology was carried out on a car bottom forging furnace at Shultz Steel Company in South Gate, California. Oscillating combustion was able to achieve up to 49% reduction in NO_x emissions from the forging furnace while keeping the CO emissions averaging less than 100 ppm when the furnace was run in a low (~20%) excess air mode of operation. This amount of NO_x reduction essentially meets the emissions goal of the project, though the reduction was somewhat less than the 61% achieved in GTI's laboratory (with a furnace temperature of

2050°F, air preheat temperature of 800°F, and excess air level of 28%) with the same make and model of burner (though about 40% of the capacity) as those on the forging furnace.

The NO_x emission levels from the forging furnace at the 49% reduction case approached that of low-NO_x burners (low NO_x being 50 ppm for burners for forging furnaces). For operation at higher (~80%) excess air levels, for which the furnace can generate 3 or 4 times as much NO_x emissions as for low excess air levels under steady (non-oscillating) conditions, a modest 18% reduction in NO_x emissions was achieved with oscillating combustion. This was not unexpected since it was already known from laboratory testing on various burners that little to no reduction in NO_x emissions could be achieved with such high excess air levels. The reason for this phenomena is that with high excess air levels, the ability of the oscillating valves to generate fuel-rich conditions within the furnace is severely limited or even eliminated. It should be noted that the magnitude of the NO_x reduction in terms of ppm was actually greater for the higher excess air level case. Overall, NO_x was reduced by about 60 to 100 ppm regardless of the excess air level.

Since the forging furnace has regenerators, the efficiency of the furnace is not impacted much by the excess air level. The regenerators also tend to cancel out any improvements in heat transfer from the flame to the load within the furnace since the additional heat gained by the load is not available to heat the incoming air. Nevertheless, a fuel savings of up to 3%, dependent on furnace operating conditions, was obtained with oscillating combustion on the forging furnace. For a furnace in continuous use, the fuel savings can be translated into a productivity increase of the same amount, which may have a bigger economic impact. The value of 3% fuel savings added to the value of the 49% NO_x reduction would indicate a payback period of 2.3 years.

The SSP valves generated no audible noise in the field. Flame sensing was not a problem at frequencies as low as 0.2 Hz even though no pilot was running. The pulsing of the gas flow did not affect the operation of the gas safety train. The oscillating valve control system itself functioned well during field testing. The only problem observed with general furnace operation with the oscillating combustion system running was the tendency to temporarily overshoot the temperature set point of the furnace zone closest to the door after the door is closed following the removal or insertion of a work piece. The more than expected overshoot with oscillating combustion was likely due to the more effective heat transfer and/or the altered flame shape with oscillating combustion. A simple restriction of the maximum firing rate of that zone, or a small increase of the over-temperature limit, eliminated the potential for the a furnace shutdown due to this phenomenon.

Recommendations

For best performance of oscillating combustion in terms of percentage NO_x emission reduction, a furnace (like the car bottom forging furnace that was tested) should be operated with a constant, low excess air level. This is usually also the most thermally efficient means of operation. Essentially, good control of the air-fuel ratio is necessary for the successful implementation of oscillating combustion.

For facilities that might need a varying excess air level (such as for a large turndown of the firing rate or for increasing convective flow within the furnace), a number of air-fuel ratio strategies can be utilized that will minimize the amount of time the excess air level is at less than favorable conditions for oscillating combustion. The simplest strategy would be to have the burners cycle on and off when the firing rate demand is below the burners' turndown capability.

For retrofit installations where the more effective heat transfer or the altered flame shape of oscillating combustion may result in transient over-temperature swings, it is recommended that the over-temperature limits be raised accordingly, the thermocouple for the over-temperature limit be moved to be less sensitive to the effect, or the maximum firing rate be throttled during events when the over-temperature swing could occur.

Laboratory Testing Results

One concern about applying oscillating combustion to the heating of certain metals, such as titanium (one of the major metals forged at Shultz Steel), is that the fuel-rich conditions necessary in oscillating combustion for substantial NOx reduction could generate large quantities of hydrogen in the combustion gases, which is absorbed by titanium. Too much hydrogen absorption would have led to embrittlement of the titanium metal. To alleviate this concern, titanium samples were heated with the Zedtec burner (the same make and model as those on the forging furnace at Shultz Steel, though smaller in capacity) in GTI's test furnace under oscillating combustion with low and high amplitude oscillations. The analysis of the samples found that in all cases, the level of hydrogen in the samples was less than about half of the allowable limit, even for samples directly under the flame with high amplitude oscillations that alternate the flame between very fuel-rich and fuel-lean conditions. The samples downstream of the flame picked up even less hydrogen, and were close in concentration to those samples heated without oscillating combustion.

Retrofit Equipment

The Oscillating Combustion tests above used a valve developed by CeramPhysics, Inc.--the Solid-State Proportioning (SSP) valve. It has an extremely fast response time, is practically noise free, and has already shown operation for over 110 million cycles without degradation in performance. In this

valve, an elastomer disk is sandwiched between the fixed and movable pistons. An actuator in the valve is energized and de-energized at the desired oscillation frequency. The force exerted by the actuator on the moving piston causes the elastomer disk to bulge out and restrict the fuel flow through an annular passage, thus providing the oscillations in the fuel flow rate.

The SSP valves performed well during the test campaign, logging an estimated aggregate 1 million cycles. No mechanical adjustments were made to the valves during the test campaigns. The SSP valves generated no audible noise in the field.

(This page intentionally left blank.)

INTRODUCTION

High-temperature, natural gas-fired furnaces, especially those fired with preheated air, produce large quantities of NO_x* per ton of material processed. Regulations on emissions from industrial furnaces are becoming increasingly more stringent. In addition, competition is forcing operators to make their furnaces more productive and/or efficient. Industries based in California are under particularly strict air emission regulations. Without improved combustion technologies, the cost of meeting these emission regulations may eventually force some companies to relocate away from California, with a consequential loss of natural gas sales, tax revenues, and industrial jobs. Lower-cost compliance technology and combustion equipment with increased productivity is required by California industry in order to remain competitive.

Switching from preheated air to industrial oxygen can increase efficiency but does not necessarily reduce NO_x due to NO_x formation from nitrogen present in the industrial oxygen, in the natural gas, in the air trapped within the raw materials, and in air that infiltrates into the furnace through cracks or discontinuities in the furnace's shell. Use of cryogenic oxygen (with almost no nitrogen) does help reduce NO_x compared to industrial oxygen (with 5%-10% nitrogen), but this oxygen is significantly more costly.

To help industries make their furnaces less polluting and more productive, whether they are firing with ambient-temperature air, preheated air, oxygen-enriched air, or oxygen, the **Oscillating Combustion** technology was developed to be a simple, low-cost technology that can be applied to a wide range of high-temperature air/gas- or oxygen/gas-fired industrial process such as forging furnaces, glass melters, steel reheat furnaces, aluminum melters, etc.. Laboratory results have shown that NO_x emissions can be reduced by 65% to 90% while simultaneously increasing heat transfer to the load by as much as 10%. To achieve these results, the technology requires only that a new fuel flow control valve be installed on the fuel line ahead of the burner (see Figure 1).

Oscillating Combustion (U.S. Pat. Nos. 4,846,665 and 5,302,111; European Pat. No. 0524880B1, Australian Pat. No. 9220395) is a retrofit technology that involves the forced oscillation of the fuel flow rate to a furnace (See Figure 1). When oxygen is used, its flow rate may also be oscillated, but out-of-phase with the fuel. These oscillations create successive, fuel-rich and fuel-lean zones within the furnace (see Figure 2).

* NO_x is the sum of NO plus NO_2. For most high-temperature combustion processes, NO_x is 90% or more NO. For regulatory purposes, emissions reporting on a weight basis assumes all NO_x to be NO_2.

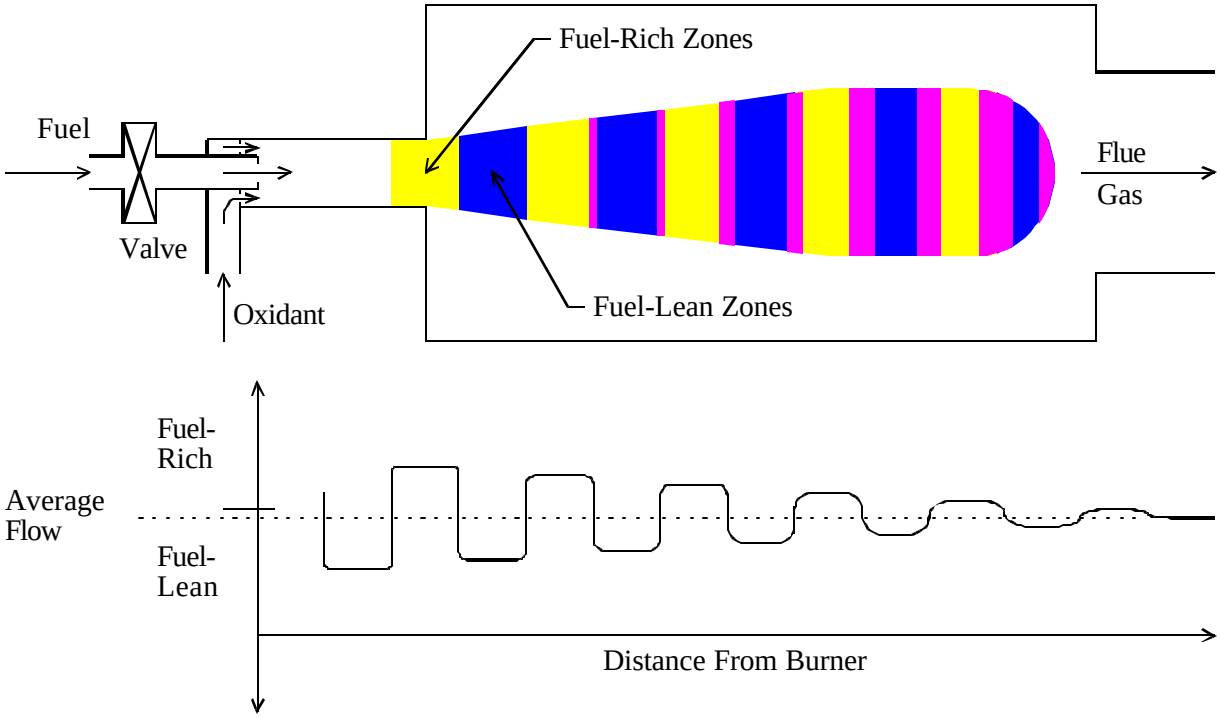

Figure 1. OSCILLATING COMBUSTION CONCEPT

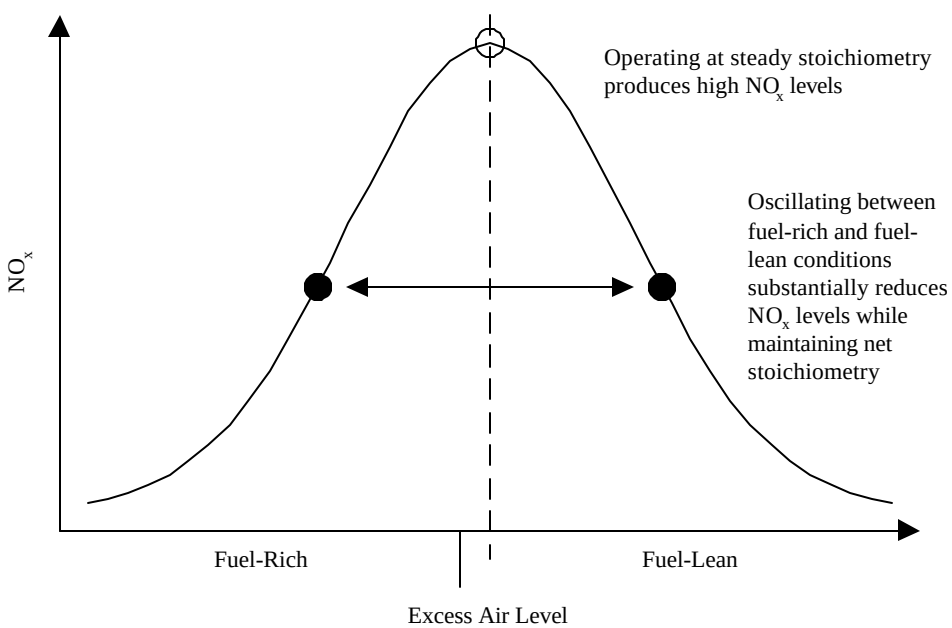

Figure 2. EFFECT OF STOICHIOMETRY ON NO_x

Since combustion under both fuel-rich and fuel-lean conditions produces low levels of NO_x, the NO_x formed in each zone is significantly lower than that which would occur if the combustion took place without fuel oscillation but at the same overall average fuel flow rate due to reduced oxygen availability

and reduced peak flame temperature. When the fuel-rich and fuel-lean zones eventually mix in the furnace, after heat has been transferred from the flame to the load and the flame temperature is lower, the resulting burnout of combustible gases occurs with little additional NO_x formation.

Heat transfer from the flame to the load increases due to the more luminous fuel-rich zones, the increased turbulence created by the flow oscillations, and breakup of the thermal boundary layer. The increased heat transfer shortens heat up times, thereby increasing furnace productivity, and reduces the heat going up the stack, thereby increasing furnace efficiency.

The implementation of oscillating combustion requires that a valve be installed on the fuel supply line of each burner. This oscillating valve must be able to rapidly open and close at the frequencies, amplitudes, and duty cycles needed to optimize heat transfer increase and/or NO_x reduction. A controller must also be installed to drive all the valves on a furnace (or one controller for each zone of a furnace) to keep the valves in proper synchronization. No modification of the burner or the furnace is necessary.

In order to optimize the performance of oscillating combustion, four parameters, as outlined in Table 1, must be adjusted to suit any particular application. As an example, for a gas flow with an average rate of 500 SCF/h, at a frequency of 2 Hz, a 30% amplitude, and a 50% duty cycle, the gas flow would alternate between 0.25 seconds at 650 SCF/h and 0.25 seconds at 350 SCF/h. At the same frequency and amplitude but at a 60% duty cycle, the gas flow would alternate between 0.3 seconds at 620 SCF/h and 0.2 seconds at 320 SCF/h.

Table 1. PARAMETERS USED FOR OSCILLATING COMBUSTION

Parameter	Definition	Unit	Comments
Frequency	Number of oscillation cycles per unit time 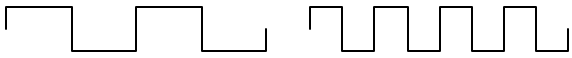	Hz	∞ Hz (not 0 Hz) is used to denote steady (non-oscillating) operation.
Amplitude	Relative change in gas flow rate during the oscillation cycle above or below the average flow rate 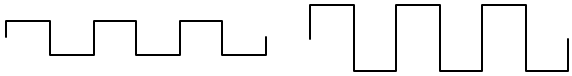	%	0% is for no oscillations. 100% is for oscillating between zero flow and double the average flow.
Duty Cycle	Fraction of time the gas flow rate is above the average flow rate during each oscillation cycle 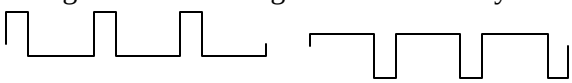	%	50% is for equal time above and below the average flow.
Phasing Between Burners	Relative offset in time between the start of oscillation cycles for different burners 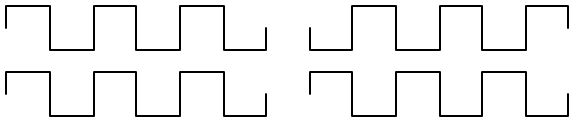	° (deg.)	0° is for in-phase oscillations. 180° is for completely out-of-phase oscillations.

BACKGROUND

The oscillating combustion technology is currently the focus of an ongoing R&D program at Gas Technology Institute (GTI[†]) and at Air Liquide's Chicago Research Center. Support is being or has been provided by California Air Resources Board (CARB), Columbia Energy Group-Energy Consulting Services[‡], Gas Technology Canada[§], Gas Research Institute, Southern California Gas Company (SoCalGas), U.S. Department of Energy-Office of Industrial Technologies, and GTI's Sustaining Membership Program.

Oscillating Combustion Process Development

In bench-scale (5,000 Btu/h) testing with air-gas firing at GTI in the late 1980's, NO_x reductions of 65% compared to steady fuel flow were achieved, depending on load and oscillation frequency[1]. Independently, bench- to pilot-scale (68,000 to 3,400,000 Btu/h) testing with oxy-gas firing at Air Liquide (AL) produced 40%-90% NO_x reductions, depending on load, oscillation parameters, and whether oxygen was also oscillated[2-3]. When oxygen was oscillated, it was out-of-phase with the gas.

Air Liquide has licensed GTI's oscillating combustion patents and know-how to gain world-wide exclusive rights to oxy-gas-fired applications of the technology. GTI retains a nonexclusive right for air-gas-fired applications.

In 1995, a project[4] was started at GTI and AL to 1) prove the effectiveness of a particular valve when applied to oscillating combustion, 2) parameterize the operational characteristics of oscillating combustion, and 3) conduct a field test of oscillating combustion on an oxy-gas-fired industrial furnace. The valve studied in this previous project was the CeramPhysics (CPI) Solid-State Proportioning (SSP) valve. The operational characteristics of oscillating combustion were studied on a North American model 4825-5 Hot Air burner on GTI's high-temperature test furnace. Heat transfer increases of 13% and 2%, and NO_x emissions reductions of 65% and 75% were observed when oscillating combustion was applied to this burner when fired with ambient air and air preheated to 875°F, respectively. Tests at AL with their ALGLASS tube-in-tube oxy-gas burner showed a 70% NO_x reduction. AL performed a field test on a oxy-gas-fired rotary iron melter, which used a AL MF6 water-cooled oxy-gas burner. While NO_x

---

[†] In April 2000, Institute of Gas Technology (IGT) and Gas Research Institute (GRI) combined to form Gas Technology Institute (GTI).

[‡] Formerly known as Columbia Gas Distribution Companies. Subject a recent acquisition, name may change to NIPSCO Development Co. Inc.

[§] A consortium of four Canadian gas utilities—Centra Gas, Consumers Gas, Gaz Metropolitain (represented by the Natural Gas Technology Center), and Union Gas. Centra Gas and Union Gas have since merged to become Union Gas Limited.

reduction was minimal for this application due to air infiltrations and the often fuel-rich conditions in the melter, fuel savings of 10% to 16% and cycle time reductions of 12% to 20% were seen.

In 1996, a follow-on project was started at GTI and AL to 1) parametrically test Oscillating Combustion on a wide variety of industrial burners, 2) perform characterization and longevity testing of the CeramPhysics SSP valve, 3) conduct a field test of Oscillating Combustion on a air-natural gas-fired batch annealing furnace in Indiana, and 4) conduct a field test of Oscillating Combustion on a commercial, oxy-natural gas-fired, glass melting furnace in Texas. The parameterization tests resulted in indicating which types of burners oscillating combustion was best suited for. One of the better performing burners was the Zedtec model RCB burner. This is the model of burner that is used on the Shultz Steel forging furnace, which is the subject of this report. The longevity testing on the SSP valve found no degradation in performance for over 110 million cycles. The field test results for the annealing furnace showed a 30% reduction in NOx, and up to 5% increase in fuel efficiency. The field test results for the glass melter showed 57% NOx reduction, 3 to 4% efficiency improvement, 7 to 8% reduction in oxygen use, and 30° to 50° F drop in furnace crown temperature. The reduction in crown temperature is important since it can lead to longer furnace campaigns between rebuilds. This installation has been in continuous operation for over two years.

Oscillating Valve Development

GTI's tests in the late 1980's used a solenoid valve or a solenoid-based EGR (exhaust gas recirculation) valve, while AL's early tests used a rotary plug valve. All of these valves had drawbacks that made them unsuitable for industrial applications. The solenoid valves did not have a long lifetime, and the rotary plug valve was expensive. Also, none of these valves provided an adjustable oscillation amplitude (adjustable high (open) and low (closed) flow rates).

A valve apparently meeting the requirements of low cost and long life was being developed by CeramPhysics, Inc. (CPI) of Westerville, Ohio, in 1994 for other applications under support from Columbia Energy Group and Southern California Gas Company. At that time this valve, known as the Solid-State Proportioning (SSP) valve (U.S. Patent No. 5,222,713), had a flow capacity of only 40 SCF/h, but it was shown that it could operated at high frequencies (20 Hz) and produce fairly square flow rate pulses. It was also virtually noise free.

In a previous project[4], the SSP valve design was scaled up and redesigned by CPI. This new design featured an inductive (solenoid-type) actuator and an annular space for the gas flow. CeramPhysics scaled-up the SSP valve first to 500-SCF/h (equal to 250 SCF/h average flow when the flow is oscillated) and then to 3,000-SCF/h (equal to 1,500 SCF/h when oscillated). Details of the SSP valve development for this project have been reported on previously[5]. For the project that is the subject

of this report, CeramPhysics scaled-up the SSP valve further to 8,000-SCF/h (equal to 4,000 SCF/h when oscillated).

A schematic drawing of the SSP valve concept is shown in Figure 3. An elastomer disk is sandwiched between the fixed and movable pistons. The actuator is energized and oscillated at the required oscillation frequency. The force exerted by the moving piston on the elastomer disk causes it to bulge and restrict the flow passage, which provide required flow oscillations. The movement of the actuator is controlled by the current applied to it and thus the amount flow can be regulated proportionally. This allows the valve to oscillate between any partially open and partially closed positions, so the oscillation amplitude is controllable. A photograph of an SSP valve prototype is shown in Figure 4. In the version pictured, the inlet is on the side and the outlet is on top. A schematic for the pictured version is shown in Figure 5.

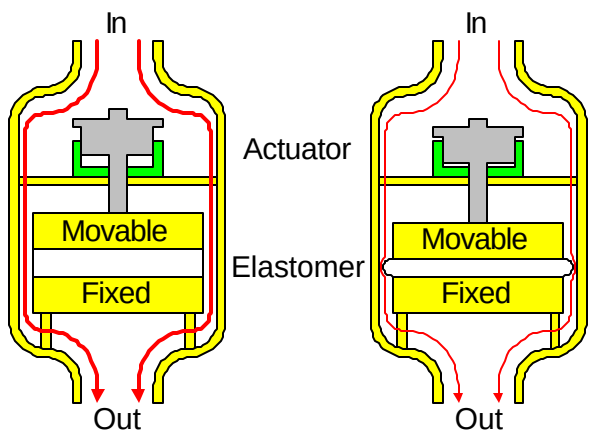

Figure 3. CERAMPHYSICS SSP VALVE CONCEPT

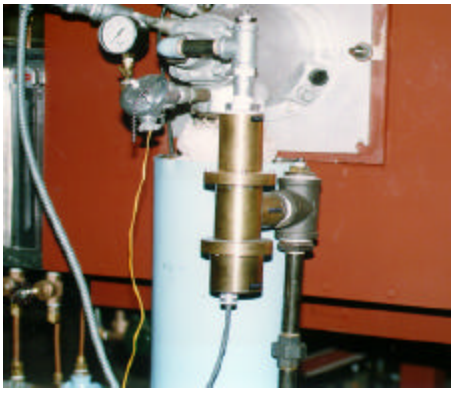

Figure 4. PROTOTYPE CERAMPHYSICS SSP VALVE INSTALLED ON GTI'S TEST FURNACE

Safmatic (an affiliate of Air Liquide), has licensed the SSP valve from CeramPhysics. Safmatic is developing commercial prototypes of the valve with a capacity of 6,800 SCF/h (average flow when the flow is oscillated). Prototypes of the Safmatic valve have been tested by Air Liquide.

Prior Relevant Work

A Zedtec (Dyson Hotwork) Regenerative Ceramic Burner, identical to though smaller than those installed on the FPN car bottom furnace at Shultz Steel, had already been tested at GTI's laboratory in order to optimize operating parameters and to gauge the effect oscillating combustion would have on their furnace. Selected NO_x reduction results of this testing are shown in Figure 6. The maximum NO_x reduction obtained was 61%. Heat transfer measurements made during these tests showed a 6% increase at oscillation parameters producing the maximum NO_x reduction and up to 8% increases at other oscillation parameters.

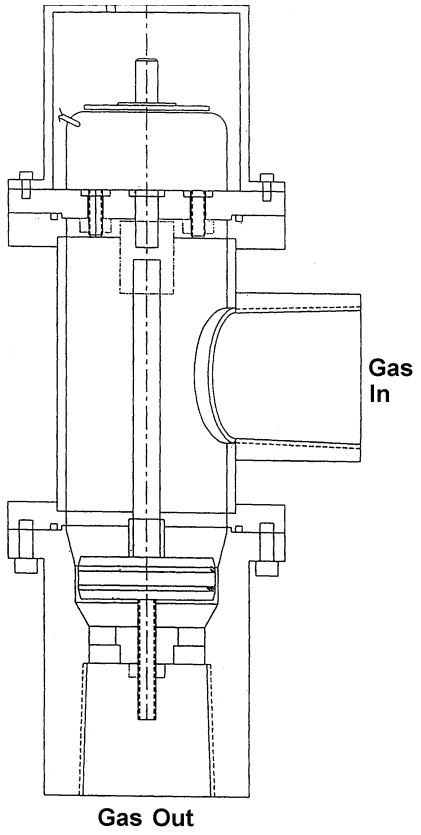

Figure 5. CERAMPHYSICS MODEL 7 SSP VALVE DESIGN

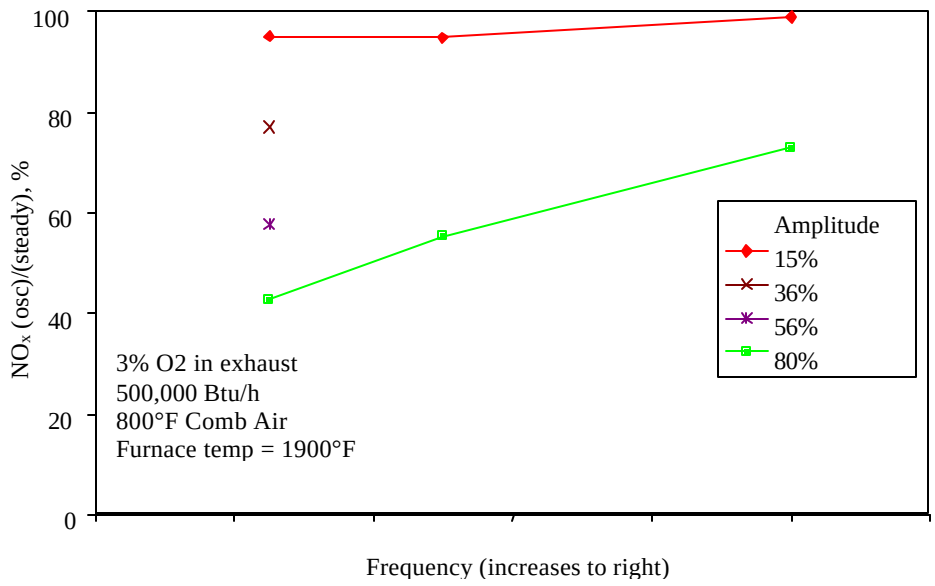

Figure 6. LABORATORY RESULTS FOR ZEDTEC REGENERATIVE BURNER

Figure 6 shows the NO_x emissions during Oscillating Combustion as a percentage of that from baseline conditions (normal steady combustion) for various oscillation frequencies and amplitudes. Lower frequencies and higher amplitudes produce larger NO_x reductions. If the oscillation frequency is decreased beyond that shown in Figure 6, the NO_x emission is further reduced, but the CO emission rises above baseline levels since the fuel-rich and fuel-lean zones are too large to mix and burn out the CO within the furnace.

PROJECT OBJECTIVE

The overall goal of this effort was to successfully demonstrate the benefits of oscillating combustion on a car bottom forging furnace located at Shultz Steel Co. in Southgate, CA. The targets for from this effort were a 50% NO_x reduction, a 5% fuel savings, no adverse affect on product quality, and maintenance of product temperature uniformity, while holding CO to an acceptable level (< 100 vppm). The results from the field test will be used to illustrate performance gains with oscillating combustion that can be used to promote commercialization of the technology throughout California and the United States.

While the goals of this project are similar to those of previous field tests, the unique aspects of this project are 1) the concern that hydrogen generated from the fuel-rich portion of the oscillating combustion cycle may be of sufficient quantity to affect the metallurgy of certain metals being processed; 2) the arrangement of all burners being on the same side of the furnace, which affects the strategies for phasing between burners; 3) the use of regenerators to preheat the combustion air; 4) the frequent cycling of burners on and off due to the regenerative system, which means that burners must be reignited while the gas flow rate is oscillating; and 5) the operation of furnace at diverse excess air levels.

MATERIALS AND METHODS

Technical Approach

The concluded project was the demonstration of Oscillating Combustion technology on an existing car bottom forging furnace at Shultz Steel Company in South Gate, California. Prior to the project, GTI personnel visited Shultz Steel and made a spot check of the NO_x emissions. GTI had also tested the burner used in the forging furnace in GTI's laboratory. Based on the site visit and the laboratory test results, GTI has determined that this site was a good candidate for application of the Oscillating Combustion technology.

The scope of work consisted of the four tasks described below. All tasks were funded nearly proportionately between ICAT and SoCalGas with the exception of (1) the oscillating valves, the valve control system, and the pipe trains housing the valves, which were funded solely by SoCalGas, and (2) the installation work and data analysis at Shultz Steel, which were in-kind contributions from Shultz Steel.

Task 1. Retrofit Design

This task consisted of 1) performing a survey at the host site to gather information for designing the retrofit installation and for locating GTI's instrumentation; 2) conducting testing in GTI's test furnace to determine the metallurgical effects of oscillating combustion on titanium samples; and 3) designing the retrofit installation, which had a bypass to allow for both steady and oscillating combustion modes of operation, and included the changes needed to the gas supply train and the air-fuel ratio control subsystem.

Task 2. Setup

This task consisted of 1) setting up GTI's instrumentation (combustion gas analyzers, sample conditioning trains, thermocouples, and chart recorders) at the host site; 2) installing the oscillating valves and their associated bypass piping; 3) modifying the gas supply train to deliver to proper pressure; 4) modifying or replacing the air-fuel ratio control subsystem; and 5) installing the oscillating valve controller and associated wiring. Except for GTI's instrumentation, this effort was performed by host site personnel.

Task 3. Testing

This task consisted of 1) about one week of baseline testing prior to the installation of the oscillating combustion retrofit system; 2) about three weeks of testing with oscillating combustion; 3) removal of GTI's instrumentation; and 4) removal of the oscillating combustion retrofit system if the purchase option is not exercised. The testing gathered data on emissions, process temperature, and fuel

consumption with the furnace operating under typical, commercial conditions (see Table 2). During testing with oscillating combustion, the oscillation parameters of frequency, amplitude, duty cycle, and phasing were varied to optimize the NO_x reduction.

Task 4. Analysis & Reporting

This task consists of 1) executing a field test agreement with the host site; 2) analyzing data from the field testing; and 3) preparing and submitting progress reports and a final report. The field test agreement delineated the responsibilities of all parties, period of performance, access to the site, ownership of the system, purchase option, publication criteria, press releases, and other items of interest.

Table 2. LIST OF PARAMETERS CONTROLLED AND MONITORED DURING OSCILLATING COMBUSTION TESTING

Controlled	
Frequency	the number of oscillation pulses per second
Amplitude	the relative change in gas flow rate above or below the average flow rate
Duty Cycle	the fraction of time the gas flow rate is high during each oscillation pulse
Phasing	whether burners are pulsed in-phase or out-of-phase with each other
Monitored	
Exhaust Gas Temperatures and Compositions (NO_x, CO, THC, O_2, and CO_2)	
Natural Gas Pressures and Flow Rates	
Furnace Temperatures and Pressure	
Specified Product Temperature and Processing Time	

Facilities And Equipment

GTI Combustion Laboratory

The laboratory oscillating combustion tests for Task 1 of this project were carried out in GTI's portable high-temperature, bench-scale test furnace (see Figure 7), which is located at GTI's Emerging Energy Technology Campus, adjacent to GTI's Headquarters in Des Plaines, IL.

GTI's test furnace is 89 inches long with a 15 inch x 15 inch cross section. The furnace is lined with 2800°F fiber board insulation. Sixteen water-cooled tubes are inserted through the roof of the furnace along its side walls. They can be lowered individually into the furnace to provide variable loads and/or to measure heat flux profiles. A combustion air preheater is mounted under the furnace to provide combustion air temperatures up to 1000°F. An available, electric preheater can be used to preheat the natural gas as well. Nine ports on both sides of the furnace and three ports at the back end provide for gas

sample, temperature, and optical data collection. The front end has a large opening to allow for installation of many types of burners with capacities of up to approximately 1 MMBtu/h. Natural gas, combustion air, and load water flow rates, temperatures, and pressures are measured. Thermo Electron and Beckman/Rosemount combustion gas analyzers are used for measuring the NO_x, CO, THC, O_2, and CO_2 concentrations in the combustion gases. A schematic diagram of the unit is presented in Figure 8.

Figure 7. OVERALL VIEW OF THE GTI's PORTABLE HIGH-TEMPERATURE BENCH-SCALE TEST FURNACE

Table 3. GTI FURNACE MONITORING EQUIPMENT

Thermo Electron 14A & 42H NO/NO_x analyzers	Coalescing filters
Rosemount Analytical 755R O_2 analyzers	Millipore desiccators
Beckman Industrial 755 O_2 analyzers	Permapure membrane dryers
Rosemount Analytical 880A CO analyzers	Type R, T, and J thermocouples
Rosemount Analytical 880A CO_2 analyzers	Temperature controllers and readouts
Beckman Industrial 864 CO_2 analyzers	Roots gas flow meters
Rosemount 400A total hydrocarbon analyzers	Orifice flow meters
Thermox combustible mixture analyzer	Bailey pressure transducers
Enerac portable combustion analyzer	Soltec chart recorders
Water-cooled sampling probes	Opto22 data acquisition modules
Flow control cabinet	Toshiba Pentium-based laptop computer

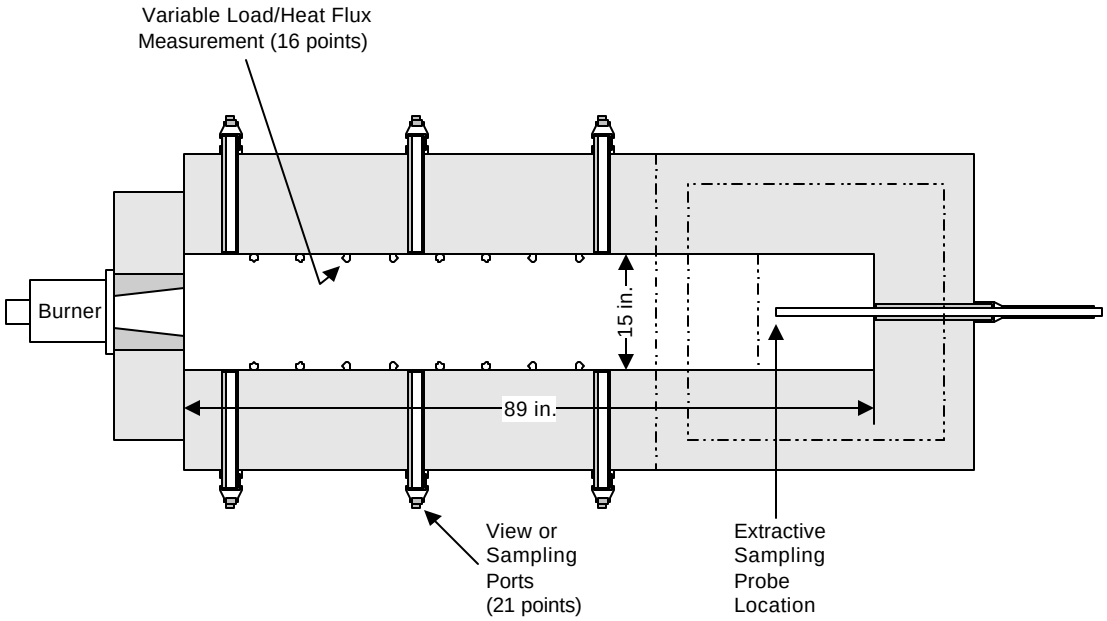

(Cross Section As Viewed From Top)

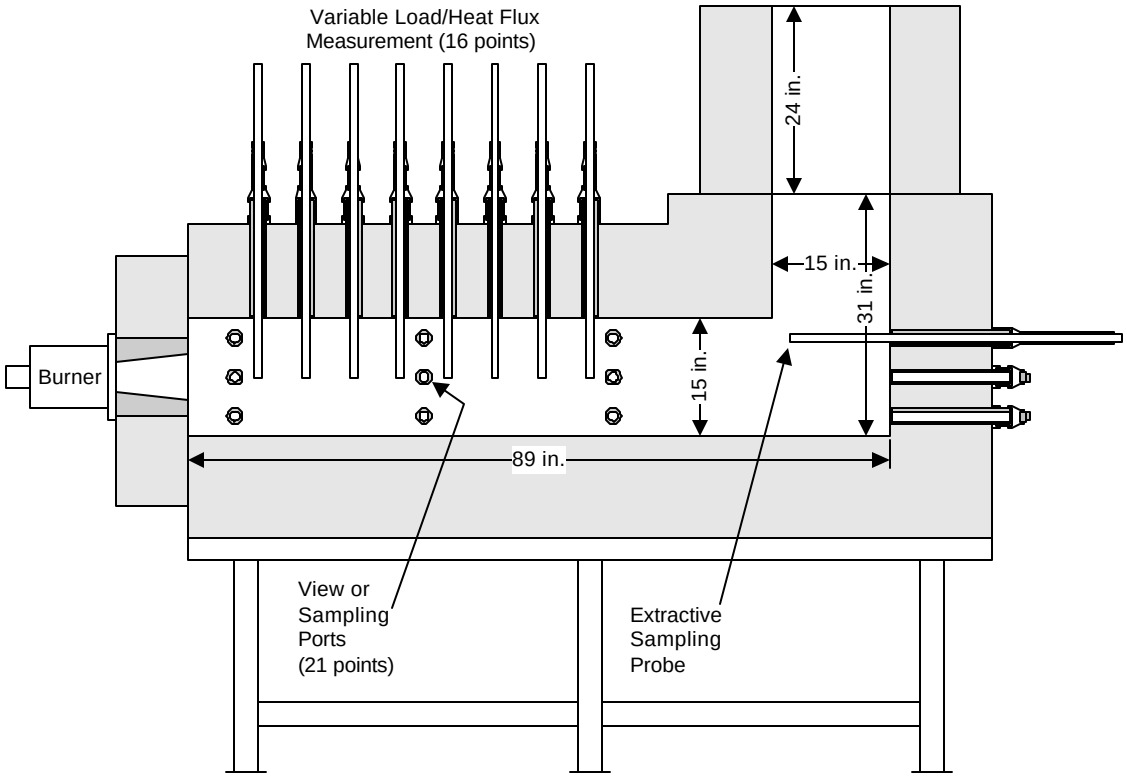

(Cross Section As Viewed From Right Side)

Figure 8. CROSS-SECTIONAL VIEW OF THE GTI PORTABLE HIGH-TEMPERATURE BENCH-SCALE TEST FURNACE

GTI Instrumentation

Burner testing in Task 1 and field testing in Task 3 used monitoring equipment from GTI's Combustion Laboratory. The relevant equipment is listed in Table 3. Measurement of NO_x emissions were made using GTI-developed sampling techniques derived from U.S. EPA Test Method 7E[6].

Forging Furnace at Shultz Steel

Shultz Steel Company operates the most modern vertically integrated forging facility in the Aerospace Industry offering: a wide range of impression forgings, including some of the largest and most complex available; an unsurpassed line of open die forgings; seamless rolled rings up to 26 feet diameter; and a regularly supply of forgings in all major alloys including a complete selection of titanium, vacuum melt high strength and stainless steels, nickel and cobalt, and aluminum alloys (rings only).

Forging furnace number FPN at Shultz Steel has been selected for field testing oscillating combustion. The furnace is of the car bottom type. It has eight 2.6-MMBtu/h Zedtec model RCB burners. Oscillating combustion, when tested in GTI's combustion lab on a smaller capacity burner of the same make and model, produced 61% NO_x reduction and 6% heat transfer increase, so this furnace was found to be a good candidate of retrofit to oscillating combustion.

The eight burners on the forging furnace are arranged as four pairs (see Figure 9). The air supply for each pair is preheated by a regenerator. Being a regenerative system, only one burner of each pair is firing at any one time, with the air for that burner being preheated by one side of the regenerator. The exhaust gases pass back though the non-firing burner to supply heat for the other side of the regenerator. After that side of the regenerator is hot enough, the firing switches to the other burner and the process reverses. Since only one burner fires at a time, the capacity of the furnace is 10.4 MMBtu/h.

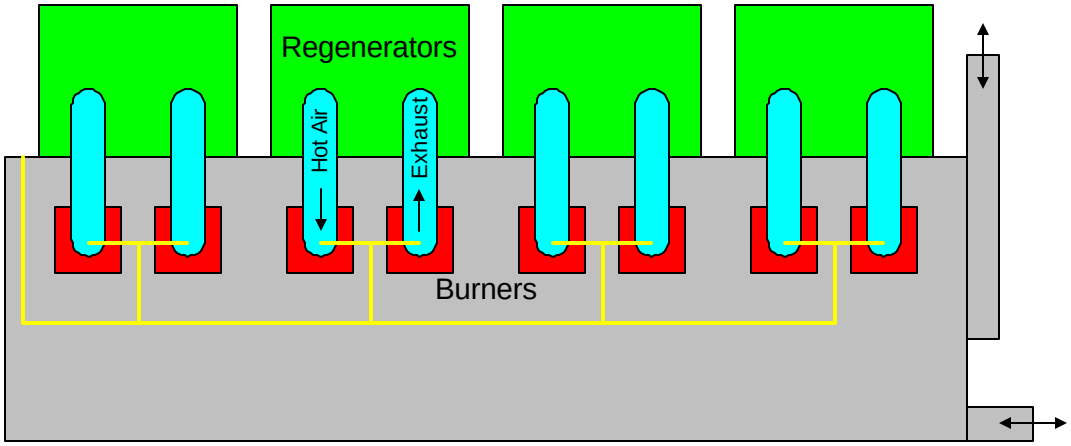

Figure 9. CAR BOTTOM FORGING FURNACE WITH REGENERATIVE BURNERS
(Side View)

The furnace is loaded and unloaded by raising the door on the front of the furnace (shown to the right in Figure 9) and, as needed, rolling out the floor (car bottom). When the door opens, the burners are driven to a low-fire condition.

The furnace, though one physical chamber, has four separate zones for the control of temperature. One pair of burners is associated with each zone. For normal operation, the temperature controllers regulate the firing rate to each zone by modulating the air flow rate. The gas flow for each zone is slaved to the air flow rate via an impulse multiplier and a ratio regulator.

RESULTS AND DISCUSSION

Task 1. Retrofit Design

This task consisted of three main activities—testing titanium samples under oscillating combustion conditions in GTI's test furnace, procuring the oscillating valves for the field test, and designing the installation for the field test.

Titanium Sample Testing

GTI developed a matrix of test points for the heating of titanium samples in GTI's test furnace under oscillating combustion. The matrix called for 6 tests—running the furnace at two different excess air levels with 1) no oscillations (baseline), 2) low-amplitude oscillations (to avoid any fuel rich conditions), and 3) high-amplitude oscillations (which entail transient fuel-rich conditions, but result in better NO_x reduction).

Shultz Steel supplied to GTI 14 samples of titanium (2 for each test plus 2 spares) and a test protocol. For each test, two samples were placed in the furnace, one under the flame and one downstream of the flame. Since GTI's test furnace has no access doors to bring samples into and out of the furnace, two holes were cut into the side of the furnace. The locations of these holes are shown in Figure 10. Ceramic bars were made for the insertion and removal of the titanium samples

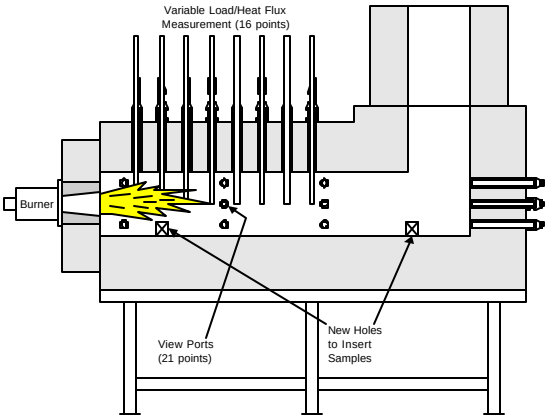

(Cross-Sectional View)

(Overall View)

Figure 10. LOCATIONS OF HOLES IN GTI's TEST FURNACE FOR INSERTION AND EXTRACTION OF TITANIUM SAMPLES

Before the titanium tests were conducted, first a dry run of the furnace was made to determine the proper gas and air flow rates to maintain the furnace at desired temperature for heating titanium at the two different excess air levels. Then a trial run was made using steel samples to verify the sample insertion, sample removal, and hole sealing techniques.

The testing of the titanium samples in GTI's furnace was completed in October 2000 (see Figure 11). The samples were heated in GTI's test furnace using Shultz Steel's protocol under six firing conditions listed in the test matrix. For each test, two samples were placed simultaneously in the furnace, with one directly under the flame and one downstream of the flame. For the insertion and removal of the samples (see Figure 12), the samples were placed on ceramic bars, which had a channel cut out at one end, and the bars were placed in the furnace with the other end protruding out. The samples would straddle the channels so combustion gasses could flow under the samples. When not be used for inserting or removing samples, the holes in the side of the furnace were sealed with ceramic fiber insulating blanket and aluminum tape. After the samples were heated in the furnace, they were placed on fire bricks and allowed to cool. The samples were placed so as to straddle two fire bricks to allow ambient air to circulate underneath. After all the testing was done, the samples were shipped to Shultz Steel for analysis.

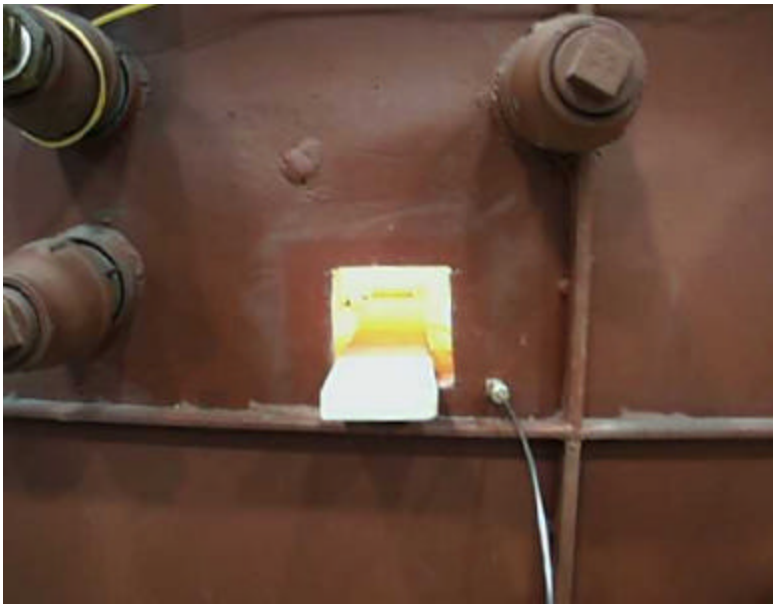

Figure 11. METAL SAMPLE INSERTED INTO GTI'S FURNACE
(Trial test with steel surrogate sample pictured; actual tests had hole sealed with ceramic fiber insulating blanket and aluminum tape)

Shultz Steel analyzed the titanium samples (see Table 4) and found that in all cases, the level of hydrogen in the titanium samples was less than about half of the allowable limit, even for samples directly under the flame with high amplitude oscillations. The samples downstream of the flame picked up even less hydrogen, and were close in concentration to those samples heated without oscillating combustion. The actual magnitudes of the oscillation amplitudes and hydrogen concentrations are not shown in Table 4 due to their proprietary nature.

Figure 12. METAL SAMPLE AFTER REMOVAL FROM FURNACE
(Trial test with steel surrogate sample pictured; ceramic fiber insulating blanket and aluminum tape is seen behind the fire bricks)

Table 4. TITANIUM SAMPLE ANALYSIS

Piece No.	Location	Excess Air Level	Oscillation Amplitude	Percent of Max Allowed H_2 Concentration
1	Control Sample	-	-	5%
9	Control Sample	-	-	10%
5	Under Flame	15%	None	34%
4	Downstream	15%	None	11%
2	Under Flame	15%	Low	36%
14	Downstream	15%	Low	14%
13	Under Flame	15%	High	51%
3	Downstream	15%	High	12%
11	Under Flame	28%	None	24%
12	Downstream	28%	None	14%
7	Under Flame	28%	Low	25%
6	Downstream	28%	Low	14%
8	Under Flame	28%	High	32%
10	Downstream	28%	High	18%

Oscillating Valve Procurement

A set of oscillating valves of the SSP design and the then largest available capacity—an oscillating flow capacity of 2,500 SCF/h (or a static flow capacity of 5,000 SCF/h) at a 1.5 psi pressure drop—were ordered from CeramPhysics for the field test at Shultz Steel. Since the burners were small enough to each be accommodated by a single CeramPhysics SSP valve, ordered set consisted of 9 valves—one for each burners plus one spare. CeramPhysics worked closely with GTI on issues such as port sizes and electrical connections to ensure that the valves fit with the rest of the retrofit package. It took four months to fabricate the valves, but during this time, CeramPhysics was able to increase the capacity of the SSP valve design by 60% to 4,000 SCF/h oscillating flow capacity, which meant a beneficially lower pressure drop for the required flow rate of 2,600 SCF/h oscillating. The final design of the CeramPhysics SSP valve is shown in Figure 13.

Retrofit Design

In October 2000, a trip was made to visit the forging furnace at Shultz Steel. The purpose of the visit was to survey the furnace and surrounding area in order to find space to place GTI's instrumentation, locate positions on the furnace or exhaust duct for temperature and sample probes, measure the dimensions of the gas supply lines to each burner pair, ascertain the amount of available space around the gas supply lines near each burner pair, survey the gas pressure and flow regulators, and determine if any interfacing was needed between the oscillating valve, control system, and the furnace control system. This information was used to design of the retrofit package.

The retrofit package consisted of three parts—oscillating valve pipe trains, modifications to the gas supply pressure and to the air-fuel ratio subsystem, and an oscillating valve control system.

. For the first part, a mock-up of piping supplying natural gas to each pair of burners on the furnace at Shultz Steel was assembled at GTI, along with a box surrounding the piping to indicate the physical space limits on and around the furnace (see Figure 14). These were used to visually observe the placement and fit of the oscillating valve with respect to accessibility and the distances from the burner, furnace wall, and existing gas and air piping. It also ensured that the retrofit package could be installed with minimal effort and downtime. After receiving from CeramPhysics the dimensions of the SSP valve (see Figure 13) to be used for the retrofit installation, at least six possible arrangements were considered for the oscillating valve pipe trains.

The design of the oscillating valve pipe trains for the retrofit installation was based on that used for a previous field test on a stack annealing furnace (see Figure 15)[7]. Space constraints and the desire to put the oscillating valves closer to the burners eventually led to a less complex design (see Figure 16). The design depicted would replace the vertical piping at the front of the constraint box shown in

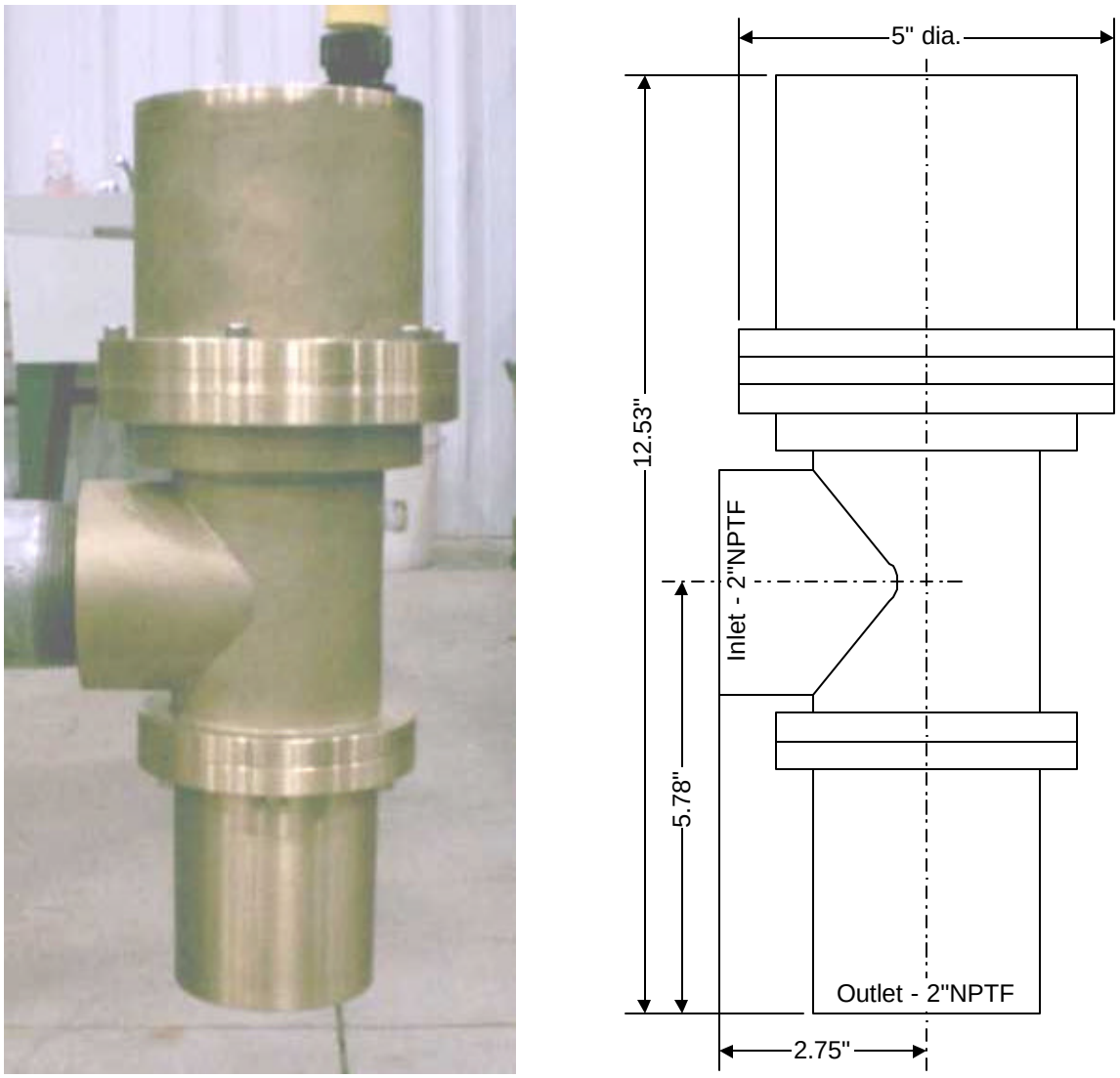

Figure 13. CERAMPHYSICS MODEL 7E SSP VALVE
(Shown about 40% of actual size)

Figure 14 and was orientated to be placed along the right-hand side of the constraint box from the pipe elbow at the top right to the pipe elbow at the bottom right. A mirror image of the design was orientated to be placed along the left-hand side of the box.

The selected design was the one that retained most of the existing piping and place the oscillating valve as close as possible to the burner without obscuring it behind the rest of the piping. The design has two flow paths (see Figure 16). For normal (steady flow) operation, the oscillating valve is de-energized (wide open) and the ball valve in one path (or leg) is closed so that the flow is restricted through the limiting orifice in the other leg. For oscillating operation, the oscillating valve is energized (with an oscillating voltage) and the ball valve is opened so that the limiting orifice is bypassed allowing full

pressure at the inlet of the oscillating valve. The design also incorporates ports that could be used to monitor the performance of the oscillating valve.

Figure 14. MOCK-UP OF PIPING AND CONSTRAINTS

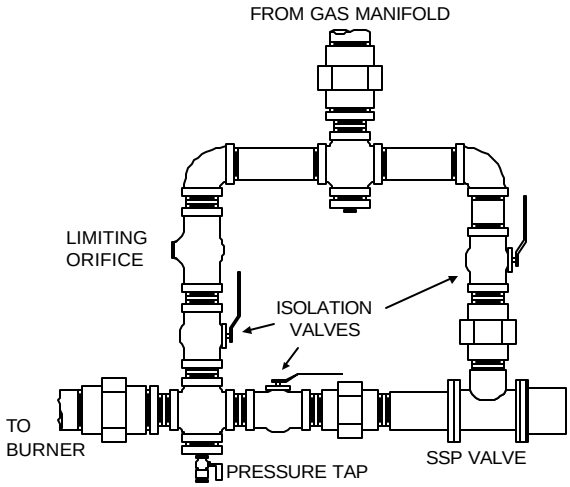

Figure 15. PREVIOUSLY USED PIPING LAYOUT WHICH SERVED AS A BASIS FOR THE RETROFIT INSTALLATION DESIGN

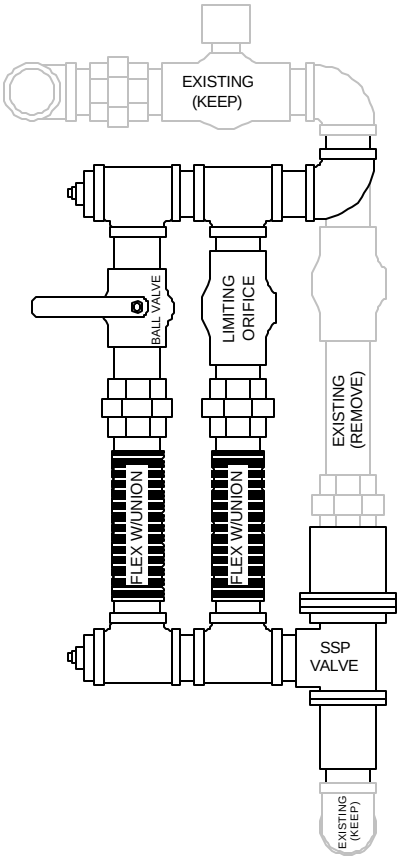

Figure 16. FINAL DESIGN OF THE OSCILLATING VALVE PIPE TRAINS FOR THE RETROFIT INSTALLATION DESIGN

Drawings of the installation design were submitted to Shultz Steel for their review and approval. Later during Task 2 GTI assembled and supplied completed pipe trains for replacement of the vertical segment of the existing pipe trains at Shultz Steel as well as additional fittings (pipe elbows, nipples, unions, etc.) to facilitate their installation.

The second part of the retrofit installation design consisted of modifications to the gas supply pressure and to the air-fuel ratio subsystem. Installation of oscillating valves requires increasing the gas pressure in the lines supplying the burners. The increase comes from two sources—the pressure drop added by the oscillating valve itself, and the quadrupling of the pressure drop across the burner and its upstream piping and fittings brought upon by the doubling of the gas flow rate during the high flow portion of the oscillation cycle (assuming 100% oscillation amplitude is used). To allow for a higher gas supply pressure to the furnace, the retrofit installation design included a replacement of the main pressure regulator on the furnace, which had a 0.5 to 2 psi outlet range, with a unit with a 2 to 5 psi outlet range.

To allow for higher pressure at the burners, the retrofit installation design included a replacement of the impulse multipliers (see Figure 17) for each pair of burners with flow balance ratio regulators.

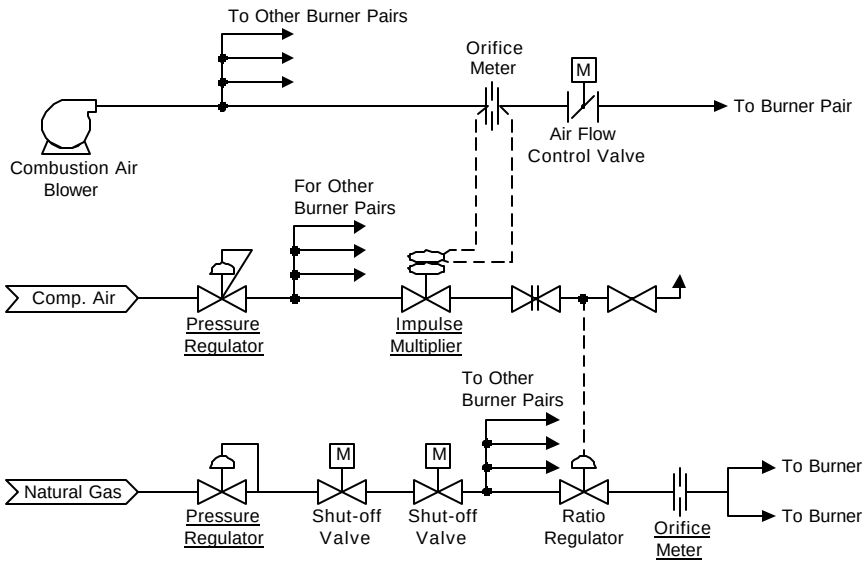

Figure 17. AIR SUPPLY, FUEL SUPPLY, AND AIR-FUEL RATIO SUBSYSTEMS
(Underlined components were replaced or modified)

Each impulses multiplier sensed a differential signal from an orifice in the combustion air line and generated a static pressure signal that was proportional to the differential pressure signal. The static pressure signal was used to drive a ratio regulator on the gas line supplying the pair of burners. The flow balance ratio regulators can be configured to perform the same function as the impulse multipliers, but can generate a much higher static pressure signal, still proportional to the differential pressure signal, to drive the ratio regulators. The higher pressure capabilities of the flow balance ratio regulators required the retrofit installation design to include a higher pressure regulator for the compressed air line that supplied them.

The retrofit installation design originally included replacement of the ratio regulators with higher pressure units. This need was alleviated by two things that would decrease the pressure requirement enough to bring it with in the capabilities of the existing ratio regulators. The first was that the oscillating valves had a much lower pressure drop than originally foreseen. The second was that by including new orifice plates for the orifices gas lines in the retrofit installation design, the pressure drop for the orifice meters could be reduced by three-fourths.

The third part of the retrofit installation design consisted of the controller to drive the oscillating valves. For this system, a valve controller design already under development at GTI for an 8-valve oscillating combustion control system was completed.

Detailed lists of the parts needed to assemble the pipe trains for the oscillating valves, the components needed for the oscillating valve control system, and the equipment needed to conduct the field testing were generated. Suppliers were evaluated for their DVBE status, relative location to the field

test site, and ability to supply the proper materials in a timely manner. Two DVBE vendors were selected to provide the pipe fittings, tools to assemble the pipe trains and for use in field testing, and the computers for the oscillating valve control system.

Task 2. Setup

Parts Procurement

Generic items—pipe fittings for the valve trains, tools for assembling the pipe trains, tools for use in field testing, and computers and programming software for the oscillating valve control system—were purchased from DVBE vendors in California and shipped to GTI. Specialty items—pressure regulators, calibration gas cylinders, thermocouples, and other instrumentation—were purchased from GTI's usual vendors.

Instrumentation Setup at Site

Installation of GTI's instrumentation began on February 12, 2001. As with other field testing GTI has done, a trailer (mobile office) for housing GTI's instrumentation was rented. It was placed behind the building where the FPN forging furnace is located. The straight-line distance between the end of trailer and the back of the furnace was about 10 feet. Calibration gas cylinders were delivered to the site and placed near the trailer. GTI shipped the bulk of its instrumentation to the site, and moved the rest from another field test site in the Los Angeles area.

GTI installed its instrumentation in the trailer (see Figure 18). The instrumentation in the trailer consists of continuous emissions monitors (CEMs) for O_2, CO, CO_2, THC, and NO_x; a flow control panel for the CEMs; thermocouple readouts, a paper chart recorder, a digital chart recorder, portable manometers, and a laptop computer. Thermocouples, stainless steel sampling probes, and sample conditioning trains (one for exhaust gas sampling and one for in-furnace sampling) were placed on the furnace. PTFE and PE tubing lines were run from the furnace to the sample conditioning trains, from the sample conditioning trains to the trailer, and from the trailer to calibration gas cylinders stored outside the trailer. Thermocouple lines were run from the furnace to the trailer. The installation of GTI's instrumentation was completed on February 15, 2001.

Assembly of the Pipe Trains and the Oscillating Valve Control System

After the nine oscillating valves (see Figure 13) were delivered from CeramPhysics to GTI, static flow testing was conducted to verify the flow capacity of the valves at the design pressure drop and that the valves would open and close properly when energized. This was followed by dynamic (oscillating) flow testing of the oscillating valves. Air supplied by a blower, a mass flow meter, and a fast-response pressure sensor were used for these tests.

Figure 18. GTI CEM AND TEMPERATURE INSTRUMENTATION INSTALLED INSIDE TRAILER

For the static flow test, the oscillating valves were tested with a fixed inlet pressure and flow through the valve was measured at several different steady input voltages. For the dynamic (oscillating) flow test, a restriction, similar to that of the Zedtec burner, was placed downstream of the oscillating valve being tested. The inlet pressure was held at a fixed value, and the voltage supplied to the oscillating valves was oscillated at a fixed frequency at several different oscillation amplitudes. The outlet pressure was measured and recorded (see Figure 19). Eight oscillating valves were then selected and paired up based on being the most similar in flow characteristics.

Eight oscillating valve pipe trains were assembled (see Figure 20). Each pipe train was then leak checked at 30 psig. Since the piping to the burners at Shultz Steel is arranged as four pairs, the pipe trains were assembled in right-hand and left-hand configurations. For each pair of oscillating valve trains, a pair of similarly characterized oscillating valves was chosen.

After leak checking, the pipe trains were flow tested and adjusted. An inlet pressure to the pipe train was chosen to allow double the original gas flow through the most restrictive of the oscillating valves with the ball valve open and the oscillating valve de-energized. With the ball valve closed and the oscillating valve still de-energized, the limiting orifice in each oscillating valve train was adjusted so that all the pipe trains would pass the original gas flow amount.

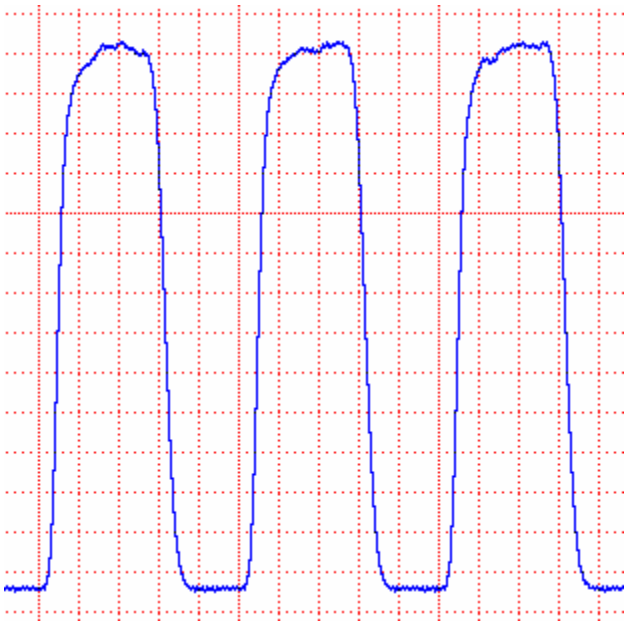

Figure 19. TYPICAL DOWNSTREAM GAS PRESSURE WAVE FROM OSCILLATING VALVE

Figure 20. OSCILLATING VALVE TRAIN (Left-hand version shown)

Figure 21. OSCILLATING VALVE CONTROL SYSTEM

The four retrofit air-fuel ratio subsystems were assembled (see Figure 22) and then were adjusted to provide the proper static pressure signal to the existing gas ratio regulators.

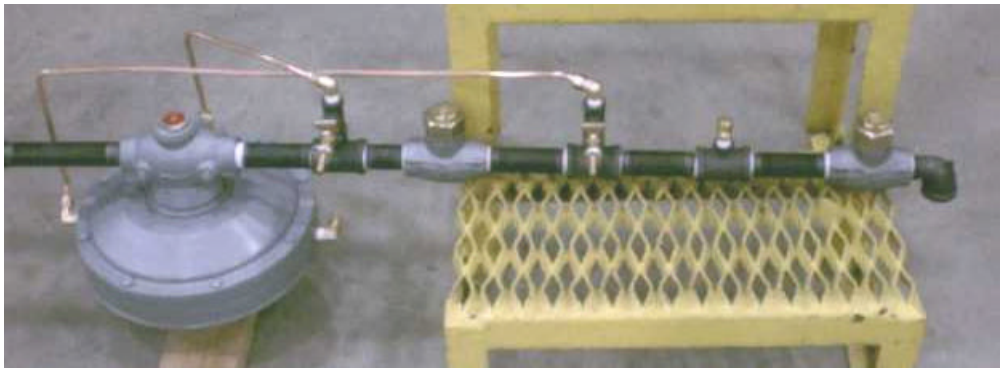

Figure 22. RETROFIT AIR-FUEL RATIO SUBSYSTEM

For the oscillating valve control system, a power supply and a valve driving circuitry for an 8-valve system had already been assembled as part of another project. These components were placed into a rack enclosure. A computer, uninterruptible power supply, and interconnect cabling was then added to complete the system (see Figure 21). The system was used for the valve flow testing described in this section. A second computer was used to record the pressure sensor readings. The valve control software, written as part of that other project, performed as expected during this testing, but a minor hardware modification needed to be made to the valve driving circuitry in order to simultaneously run multiple valves at higher frequencies.

After qualification testing and setup, the oscillating valve pipe trains and the air-fuel ratio subsystems, were crated and the oscillating valve control system was palletized. Some additional testing equipment and spare parts (pipe fittings, cabling) were also added to the crate. Some of the components were partially disassembled (with matching items labeled for ease of reassembly on site) for their own protection and/or to fit in the crate. In true environmental fashion, the actual crate used was assembled from the box used as the constraint around the piping mockup, and some of the pipe fittings from the piping mockup were included as spare parts. The crate and pallet were then shipped to Shultz Steel.

Oscillating Combustion Retrofit Package Installation

Installation of the oscillating combustion retrofit package began on March 28, 2001. The oscillating valve trains and the new air-fuel ratio controllers were installed on the furnace. The pressure regulators for the main gas header and the air-fuel ratio controllers were replaced. The new air-fuel ratio controllers were connected via tubing to the gas trains for each pair of burners. The oscillating valve control system was installed in the furnace control room. Electrical conduit and wiring were run from the furnace control room to the furnace. The oscillating valve control system and the oscillating valves were

connected to each other through the field wiring. The installed system was tuned for steady and oscillating modes of operation. The field setup was completed on April 4, 2001.

After installation of the oscillating valve control system, two changes were made to the valve control software. One change was made to force the user to press two separate keys to exit the program. This was done to prevent inadvertent shutdowns of the system. The second change was to store all of the oscillation parameters in a separate file instead of within the main program. This made it easier to update the parameters, and allowed for storage of multiple sets of parameters. The programming changes were completed on April 6, 2001.

Task 3. Testing

Baseline Tests

Baseline testing of the furnace was conducted from February 19-22, 2001. The furnace was run with the normal production schedule during this period. Emissions data was collected for several furnace temperatures and a variety of firing rates and excess air levels.

Oscillating Combustion Tests

There were four test campaigns with oscillating combustion. The first campaign, April 5-6, 2001, followed the installation of the oscillating combustion retrofit system and the tuning of the new air-fuel ratio subsystem. The second campaign was April 30-May 4, 2001. The third campaign was May 14-18, 2001. The fourth campaign, June 18-20, 2001, was followed by the removal of GTI's test instrumentation. Most of the early tests were conducted with the furnace running with a normal production load. Some of the later tests were run with an unloaded furnace. This allowed for oscillation parameters to be pushed to their limits without risking overheating or cooling off of a load, which could disrupt a production schedule.

The original test plan called for three week-long test campaigns. The plan for the first two campaigns was to carry out many short duration (~20-30 minutes) tests at various oscillation parameters (frequency, amplitude, duty cycle, burner phasing). Occasionally, data would be taken at non-oscillating conditions for the purpose of calculating the NO_x reduction level at the specific furnace conditions of that day of testing. For the third campaign, longer duration testing was planned at oscillation parameters selected based upon the results of the first two campaigns. The longer duration testing was also to allow for the measurement of fuel usage. Since the first campaign was shorter than desired due to the length of time needed for the installation of the oscillating combustion retrofit package, the short duration testing continued through the third campaign, which was suspended during a furnace survey (see below). A fourth campaign was added to provide a full three weeks of testing.

The first test campaign (April 2001) was geared mainly toward tuning the oscillating combustion system so that excess air levels were matched between steady and oscillating combustion modes of operation.

The second and third test campaigns (May 2001) were conducted with the furnace running at a low excess air level and at a high excess air level. Note that the excess air level is set via the air-fuel ratio control subsystem by the furnace operators, and not by the oscillating valve control system, even though some functionality for that is inherent in the oscillating valve control system.

During the third test campaign a furnace temperature uniformity survey was performed by Shultz Steel (without the oscillating combustion system running). Here it was noted that the furnace had some difficulty maintaining low temperatures, and that the temperature uniformity goals were not being met. While some or most of the non-uniformity may have been attributable to leaks around the furnace door (which were plugged prior to completion of the survey), it was decided (by Shultz Steel operating personnel) to shorten the length of the flames at the minimum firing rate to a size they were accustomed to. To accomplish this, the excess air level at the minimum firing rate was increased via adjustments to the air-fuel ratio subsystem. The survey was then completed within specification. The unanticipated consequence of increasing the excess air level at the minimum firing rate was that the excess air level at the middle firing rate range, where the furnace operates most of the time, was also increased.

After the survey, the oscillating combustion parameters were optimized for high excess air levels. Since the oscillating combustion parameters were not yet optimized for operation at low excess air levels, due to the suspension in testing during the furnace survey, a fourth campaign of testing was added.

The fourth test campaign (June 2001) used the inherent functionality of the oscillating combustion system to temporarily lower the excess air levels. This was done to optimize the oscillating combustion parameters for low excess levels. Test were also conducted with the furnace operating at high-excess air levels, so that fuel usage data could be collected with and without oscillating combustion with the furnace running with a normal production load.

After the testing campaign was concluded, GTI's test equipment was packed and palletized for delivery to GTI. Sampling lines were left in place on the furnace to accommodate any possible future testing. The trailer and calibration cylinders were picked by their respective suppliers. The oscillating combustion system itself was left installed on the furnace and ready for operation.

The oscillating valve control system functioned properly during field testing. No changes were made to the system after the first test campaign.

One issue was noted with the general furnace operation when the oscillating combustion system was running. When the furnace door is opened to remove or insert a work piece, the furnace temperature controller reduces the firing rate of the burners to a near low-fire level, and the temperature in the furnace drops. Upon closing the door, the furnace control system ramps up the firing rate of the burners to restore the furnace temperature. As the temperature nears the furnace temperature set point, the furnace control system decreases the firing rate. Usually, the temperature overshoots the set point somewhat before returning to the set point. The overshoot lasts no more than about 20 seconds. This would happen whether or not the oscillating combustion system was running. With the oscillating combustion system running, the overshoot was more pronounced, particularly with the temperature of the furnace zone closest to the door. The more than expected overshoot with oscillating combustion was likely due to the more effective heat transfer and/or the altered flame shape with oscillating combustion.

The effect was most acute when a warm work piece was inserted into the furnace near the furnace door. In this case, the overshoot was so large that the temperature could reach or exceed the over-temperature limit set point, which is set at a fixed differential above the furnace temperature set point. There is one over-temperature limiter for each of the four zones of the furnace. When the over-temperature limit was reached, the over-temperature limiter would shut off all the burners, not just the ones in the affected zone. This would force the furnace operators to do a manual restart of the furnace.

To avoid the possibility of having to restart the furnace, when the oscillating combustion system was running, the maximum firing rate for the zone closest to the furnace door was limited to 75% or 60%, or the over-temperature limit set point was raised by 25°F or 50°F. The larger overshoot with oscillating combustion could be attributable to a couple of factors—the more effective heat transfer of oscillating flames, and the change in flame shape with oscillating combustion and how that relates to the spatially separated thermocouples for the furnace temperature controller and the over-temperature limiter. A retuning of the furnace temperature controller's PID loop may also help, though that would affect overall furnace operation.

Other observations include that the burners relit satisfactorily while the gas flow was oscillating after each reversal (switchover of firing from one burner of each regenerative pair to the other burner); the burners stayed lit while the gas flow is oscillating when the furnace door is opened to remove or insert a work piece; and there is little to no difference in furnace pressure with and without oscillating combustion.

Task 4. Analysis & Reporting

A kick-off meeting at was held at Shultz Steel on July 18, 2000. After some background information on GTI and oscillating combustion technology were presented, the items discussed included the prior burner testing, the project goals, work scope, schedule, and funding.

GTI executed a Field Test Agreement with the host site that detailed what information would be exchanged, the start and end dates of the project, duties of each party, access to the field site, liabilities, and a purchase option. This is a standard document that GTI has entered into with all host sites involved in project demonstrations.

Baseline Tests

Analysis of the baseline data collected in February 2001 consisted of calculating an average of readings from several exhaust duct and in-furnace measurements over different excess air levels (see Figure 23). The exhaust duct and in-furnace measurements were consistent with each other when corrected to 0% O_2 to remove dilution effects due to air entrainment into the exhaust duct. As expected, NO_x emission levels increased as furnace temperature increased. The graph in Figure 23 is shown for reference only since new baseline data was taken for each oscillating combustion test. The actual magnitudes of the NO_x emission levels and furnace temperatures are not shown in Figure 23 due to their proprietary nature.

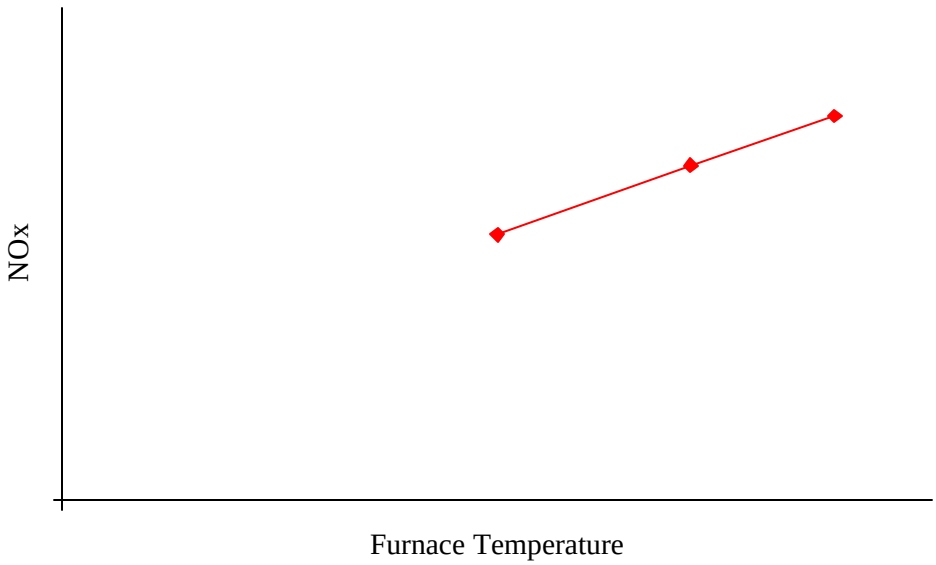

Figure 23. ORIGINAL BASELINE
(Feb. 19-22, 2001)

During the baseline testing, it was noted that the excess air level in the forging furnace varied greatly--from slightly fuel rich (5% excess fuel) at maximum firing rate to very fuel lean (100% excess

air) at minimum firing rate. When the oscillating combustion retrofit system was designed, a new air-fuel ratio subsystem was included in the retrofit package. While the primary purpose of the new air-fuel ratio subsystem was to provide the higher gas pressure needed to overcome the pressure drop of the oscillating valves and allow for doubling the gas flow during the high-flow portion of the oscillation cycle, a secondary purpose of the new subsystem was to provide a more stable air-fuel ratio. Previous tests at GTI showed that oscillating combustion preformed well in terms of NO_x reduction for low (5% to 28%) excess air levels (1% to 5% O_2 in the combustion gases), but not for higher excess air levels. After the oscillating combustion system was installed on the forging furnace, the new air-fuel ratio was set for a low (15% to 20%) excess air level (3% to 4% O_2 in the combustion gases). Measurement showed that the subsystem was able to hold this excess air level within about 1.5 percentage points of oxygen over the entire firing rate range. For low temperature operations, the furnace was still capable of running with higher excess air levels via a set of valves on the gas ratio regulators which when opened proportionally reduced the impulse signal from the air-fuel ratio subsystem. With the valves open, the excess air level was increased to about 60%.

Oscillating Combustion Tests

Analysis of the oscillating combustion data consisted of comparing data collected when the oscillating combustion system running with that collected when the oscillating combustion system was off (i.e., steady combustion) on the same day and usually within close proximity to each other time-wise.

Analysis of data collected in April 2001 (first test campaign), with less than optimized oscillation parameters, showed 28% NO_x reduction with oscillating combustion at normal (low excess air) conditions, and 17% NO_x reduction with oscillating combustion at high excess air conditions. The actual magnitudes of the NO_x emission levels are not included here due to their proprietary nature.

Analysis of data collected in May 2001 (second and third test campaigns) showed that at the high excess air level mode of operation, a NO_x reduction of 18% was achieved, with the oscillation parameters set at their optimum levels. At the low excess air level, the NO_x reduction was increased to 38%, though the oscillation parameters are not quite yet at their optimum levels to produce the maximum NO_x reduction. The actual magnitudes of the NO_x emission and excess air levels are not included here due to their proprietary nature.

Analysis of data collected in June 2001 (fourth test campaign) showed that, after several variations of the oscillation parameters, it turned out that the optimal parameters for maximizing NO_x reduction with the furnace operating at low excess air levels were the same as those found to maximize NO_x reduction at high excess air levels. The maximum NO_x reduction obtained at low excess air levels

was 49%. A summary of the best test results is shown in Figure 24 and Figure 25. The actual magnitudes of the furnace temperatures are not shown in Figure 24 and Figure 25 due to their proprietary nature.

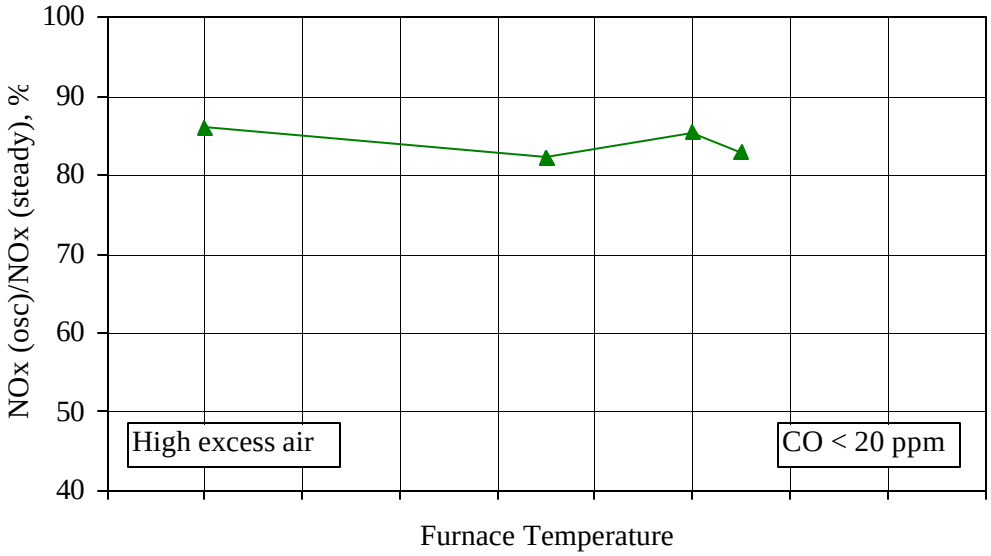

Figure 24. NO_X REDUCTION WITH HIGH EXCESS AIR

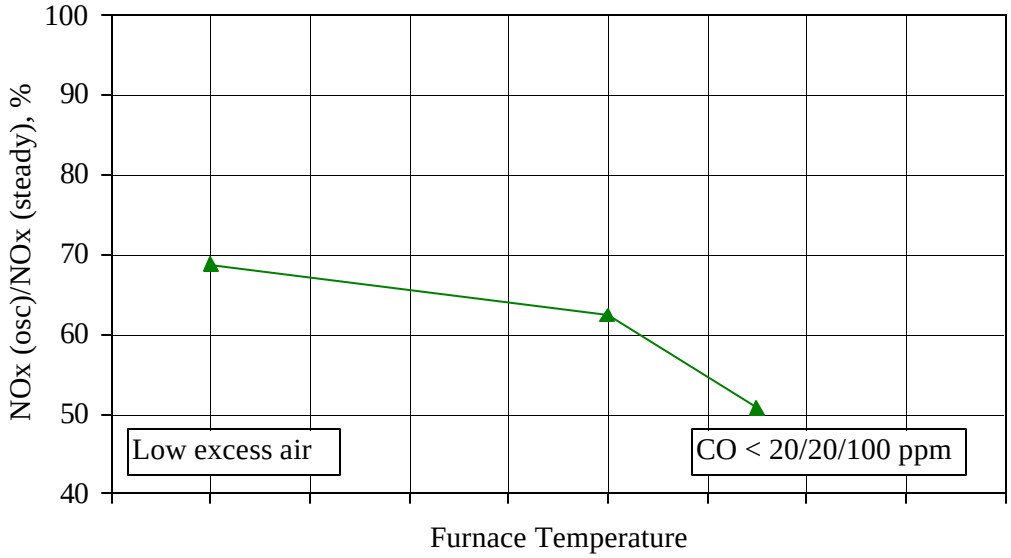

Figure 25. NO_X REDUCTION WITH LOW EXCESS AIR

The CO emission level with oscillating combustion was kept to the same low levels observed without oscillating combustion in all cases, except for when the maximum NO_x reduction was achieved, in which case the CO emissions increased to an average of about 100 ppm.

It should be noted that the furnace actually generated substantially less NO_x with low excess air levels than with high excess air levels. This was true for both baseline (steady) and oscillating

combustion modes of operation. For each data point shown in Figure 24 and Figure 25, the value shown is the ratio of NO_x for oscillating combustion to that for steady operation at the same excess air level, i.e., the baseline values used to calculate the ratios shown in Figure 24 and Figure 25 are different.

Some longer duration tests with oscillating combustion during the third and fourth campaigns with the furnace operating at high-excess air levels allowed for an estimate of potential fuel savings with oscillating combustion. Analysis using a comparison of fuel usage with and without oscillating combustion during similar furnace operating conditions showed up to 3% drop in fuel usage with oscillating combustion. The actual magnitudes of the NO_x emission, excess air, and specific fuel consumption levels are not included here due to their proprietary nature.

Projected Annual NO_x Reduction

For purposes of an example, from data collected for a particular typical furnace temperature, it can be projected that it would be possible to reduce NO_x emissions by 3.1 lb/day for low excess air operations based upon a 49% reduction in NO_x during furnace temperature conditions where oscillating combustion would be applicable. The annual reduction for 250 days/year of operation would be 775 lb.

CONCLUSIONS

In this project, a demonstration of the oscillating combustion technology was carried out on a car bottom furnace at Shultz Steel Company in South Gate, California. Oscillating combustion was able to achieve up to 49% reduction in NO_x emissions from the forging furnace while keeping the CO emissions averaging less than 100 ppm when the furnace was run in a low (~20%) excess air mode of operation. This amount of NO_x reduction essentially meets the emissions goal of the project, though the reduction was somewhat less than the 61% achieved in GTI's laboratory (with a furnace temperature of 2050°F, air preheat temperature of 800°F, and excess air level of 28%) with the same make and model of burner (though about 40% of the capacity) as those on the forging furnace.

The NO_x emission levels from the forging furnace at the 49% reduction case approached that of low-NO_x burners (low NO_x being 50 ppm for burners for forging furnaces). For operation at higher (~80%) excess air levels, for which the furnace can generate 3 or 4 times as much NO_x emissions as for low excess air levels under steady (non-oscillating) conditions, a modest 18% reduction in NO_x emissions was achieved with oscillating combustion. This was not unexpected since it was already known from laboratory testing on various burners that little to no NO_x reduction could be achieved with high excess air levels. The reason for this phenomena is that with high excess air levels, the ability of the oscillating valves to generate fuel-rich conditions within the furnace is severely limited or even eliminated.

It is interesting to note that the magnitude of the NO_x reduction in terms of ppm was actually greater for the higher excess air level. If E is the NO_x emission in ppm under steady (non-oscillating) conditions at the low excess air level and 3.5E is the NO_x emission in ppm under steady conditions at the higher excess air level, 18%(3.5E) is greater than 49%(E). Using ppm readings corrected to 0% O_2 makes the difference even greater since the correct factor is greater for higher excess air levels. Overall, NO_x was reduced by about 60 to 100 ppm regardless of the excess air level.

Since the forging furnace has regenerators, the efficiency of the furnace is not impacted much by the excess air level. The regenerators also tend to cancel out any improvements in heat transfer from the flame to the load within the furnace since the additional heat gained by the load is not available to heat the incoming air. Nevertheless, a fuel savings of up to 3%, dependent on furnace operating conditions, was obtained with oscillating combustion on the forging furnace. The value of the 3% fuel savings added to the value of the 49% NO_x reduction would indicate a payback period of 2.3 years. For a furnace in continuous use, the fuel savings can be translated into a productivity increase of the same amount, which may have a bigger economic impact.

One concern about applying oscillating combustion to the heating of certain metals, such as titanium (one of the major metals forged at Shultz Steel), is that the fuel-rich conditions necessary in

oscillating combustion for substantial NOx reduction could generate large quantities of hydrogen in the combustion gases, which is absorbed by titanium. Too much hydrogen absorption would have led to embrittlement of the titanium metal. To alleviate this concern, titanium samples were heated with the Zedtec burner (the same make and model as those on the forging furnace at Shultz Steel, though smaller in capacity) in GTI's test furnace under oscillating combustion with low and high amplitude oscillations. The analysis of the samples found that in all cases, the level of hydrogen in the samples was less than about half of the allowable limit, even for samples directly under the flame with high amplitude oscillations that alternate the flame between very fuel-rich and fuel-lean conditions. The samples downstream of the flame picked up even less hydrogen, and were close in concentration to those samples heated without oscillating combustion.

The oscillating valve control system itself functioned properly during field testing. No changes were made to the software system after the first test campaign. The SSP valves performed well during the test campaign, logging an estimated aggregate 1 million cycles. No mechanical adjustments were made to the valves during the test campaigns. The SSP valves generated no audible noise in the field.

Flame sensing was not a problem at frequencies as low as 0.2 Hz even though no pilot was running. The pulsing of the gas flow did not affect the operation of the gas safety train.

The only problem observed with general furnace operation with the oscillating combustion system running was the tendency to temporarily overshoot the temperature set point of the furnace zone closest to the door after the door is closed following the removal or insertion of a work piece. The more than expected overshoot with oscillating combustion was likely due to the more effective heat transfer and/or the altered flame shape with oscillating combustion.

The effect was most acute when a warm work piece was inserted into the furnace near the furnace door. The short-duration temperature excursion itself should pose no problems to the load in the furnace, but it can trip the over-temperature limit of the furnace, forcing a furnace shutdown and restart, during which the furnace can cool off considerably. A simple restriction of the maximum firing rate of that zone, or a small increase of the over-temperature limit, which is normally set at a fixed differential above the furnace temperature set point, eliminated the potential for the a furnace shutdown do to this phenomenon.

Other observations include that the burners relit satisfactorily while the gas flow was oscillating after each reversal (switchover of firing from one burner of each regenerative pair to the other burner); the burners stayed lit while the gas flow is oscillating when the furnace door is opened to remove or insert a work piece; and there is little to no difference in furnace pressure with and without oscillating combustion.

RECOMMENDATIONS

For best performance of oscillating combustion in terms of percentage NO_x emission reduction, a furnace (like the car bottom forging furnace that was tested) should be operated with a constant, low excess air level. This is usually also the most thermally efficient means of operation. Essentially, good control of the air-fuel ratio is necessary for the successful implementation of oscillating combustion.

For facilities that might need a varying excess air level (such as for a large turndown of the firing rate or for increasing convective flow within the furnace), a number of air-fuel ratio strategies can be utilized that will minimize the amount of time the excess air level is at less than favorable conditions for oscillating combustion.

For the large turndown case, one strategy would be to have the burner firing rate modulated at constant air-fuel ratio down to the burners' turndown limit, and, below that point, the have the burners cycled on and off. For furnaces with a relatively consistent load, a constant, low excess air level can be readily achieved with little to no on-off burner cycling.

For the increased convection case, one strategy would be to have an air-fuel ratio subsystem that can have a constant or slowly varying excess air level (by modulating both fuel and air) at high and mid firing rates and a more quickly varying excess air level (by modulating only gas) or on-off operation at low firing rates. This will allow the furnace (like the car bottom furnace that was tested) to spend most of its time at low excess air levels. An air-fuel ratio subsystem of this complexity would probably require direct control of both the air and fuel flow rates without slaving them together, or it would be composed of two separate air-fuel ratio sub-subsystems, one for higher firing rates and one for lower firing rates, and an automated switching means.

For retrofit installations where the more effective heat transfer or the altered flame shape of oscillating combustion may result in transient over-temperature swings, it is recommended that the over-temperature limits be raised accordingly, the thermocouple for the over-temperature limit be moved to be less sensitive to the effect, or the maximum firing rate be throttled during events when the over-temperature swing could occur.

STATUS OF COMMERCIALIZATION PLAN

The commercialization plan for Oscillating Combustion can be summarized as follows:

- Air Liquide has a world-wide, exclusive license for oxy-gas oscillating combustion and a nonexclusive right for air-gas oscillating combustion.
  - Air Liquide will market oscillating combustion to its industrial gas customers through its existing sales, engineering, and support channels
- GTI has retained a nonexclusive license for air-gas oscillating combustion.
  - GTI is planning to license Synergistic Partners, Inc. of Pittsburgh, PA to offer air-gas oscillating combustion commercially in the U.S.
  - Synergistic Partners, Inc. would also support marketing of oxy-gas oscillating combustion through Air Liquide.

Presently, commercial prototypes of oscillating valves based on the CeramPhysics SSP design are being developed by Safmatic (an affiliate of Air Liquide) with a capacity of 6.8 million Btu per hour, while oscillating valves of the GT Development Cyclic design are being developed by Outsource Tech Inc. with capacities of 5 and 25 million Btu per hour. These capacity ratings are for average flow rate when the flow is being oscillated. Prototypes of the Safmatic valve have been tested by Air Liquide, while prototypes of the Outsource Tech valve are presently being tested by GTI for another field demonstration.

Steps are being taken to ensure that oscillating combustion packages (valves and controller) are available for select applications including steel furnaces by Summer 2002. The forging plant markets that are subject to lower NO_x emissions will be targeted initially, e.g., Southern California, ozone non-attainment areas, and plants entering into consent agreements with the EPA. We believe the energy savings benefits will be attractive if a 1 to 2 year payback exists.

Each potential industrial site will be a site specific application of this technology, that is, different burners, levels and means of recuperation, process cycling, product type, temperature of the process, sufficient gas supply capabilities, etc. determine the details of the retrofit package. Fortunately, GTI has over the course of several years conducted numerous tests in the GTI Combustion laboratory with most of the industrial-grade burners found in direct-fired applications. Additionally, two major field tests have been conducted with a third to begin in a major steel company. As a result, GTI already has developed a comprehensive database of laboratory results and actual results in the field. GTI plans to transfer this experience and the resulting technology know-how to its commercialization partners, Air Liquide and Synergistic Partners, Inc.

REFERENCES

1. Abbasi, Hamid A., Development of a NO_x Control Technique by Oscillating Fuel Flow, Final Report for Project 20287, Institute of Gas Technology, September 1987.

2. Charon, O., Jouvaud, D., and Genies, B., "Pulsated O_2 / Fuel Flame as a New Technique for Low NO_x Emission," Combustion Science and Tech., 1993, Vol. 90, pp. 1-12.

3. Drogue, S., Breininger, S., and Ruiz, R., "Minimization of NO_x Emissions With Improved Oxy-Fuel Combustion: Controlled Pulsated Combustion," 54th Conference on Glass Problems, Oct. 26, 1993.

4. Wagner, John C., Proof-of-Concept Testing of the CeramPhysics Valve for Oscillating Combustion (Phase I/II), Final Report for Project 40357/80031, Institute of Gas Technology, June 1998.

5. Wagner, John C., and Zelepouga, Serguei, NO_x Reduction by Oscillating Combustion—SSP Valve Development, Final Report for Project 40357-03, Institute of Gas Technology, June 2000.

6. 40 CFR, Part 60, Appendix A—Reference Methods, Method 7E—Determination of Nitrogen Oxides Emissions From Stationary Sources (Instrumental Analyzer Procedure), July 1989.

7. Wagner, J.C., Kurek, H., Joshi M., and Charon, O., "Oscillating Combustion Increases Productivity and Decreases NO_x Emissions From Industrial Furnaces," Proceedings of the 1998 American Flame Research Committee Fall Members' Technical Meeting, Maui, Hawaii, October 11-14, 1998.

GLOSSARY

AL	Air Liquide
Amplitude	Relative change in gas flow rate during the oscillation cycle above or below the average flow rate
CARB	California Air Resources Board
CO	Carbon monoxide
CO_2	Carbon dioxide
CPI	CeramPhysics, Inc.
Duty Cycle	Fraction of time the gas flow rate is above the average flow rate during each oscillation cycle
Frequency	Number of oscillation cycles per unit time
GTI	Gas Technology Institute
H_2	Hydrogen
ICAT	Innovative Clean Air Technologies Program
MMBtu	1,000,000 Btu
NG	Natural gas
NO_x	Nitric oxide and nitrogen dioxide
O_2	Oxygen
PC	Personal computer
Phasing Between Burners	Relative offset in time between the start of oscillation cycles for different burners
PID	Proportional plus integral plus derivative, a process control method
ppm	Parts per million (by volume for gases, by weight for liquids or solids)
PTFE	Polytetrafluoroethylene (a.k.a. Teflon®)
PE	Polyethylene
SCF	Standard cubic foot
SCF/h or SCFH	Standard cubic foot per hour
SoCalGas	Southern California Gas Company
SSC	Shultz Sheet Company
SSP	Solid-state proportioning
THC	Total hydrocarbon
vppm	Parts per million by volume