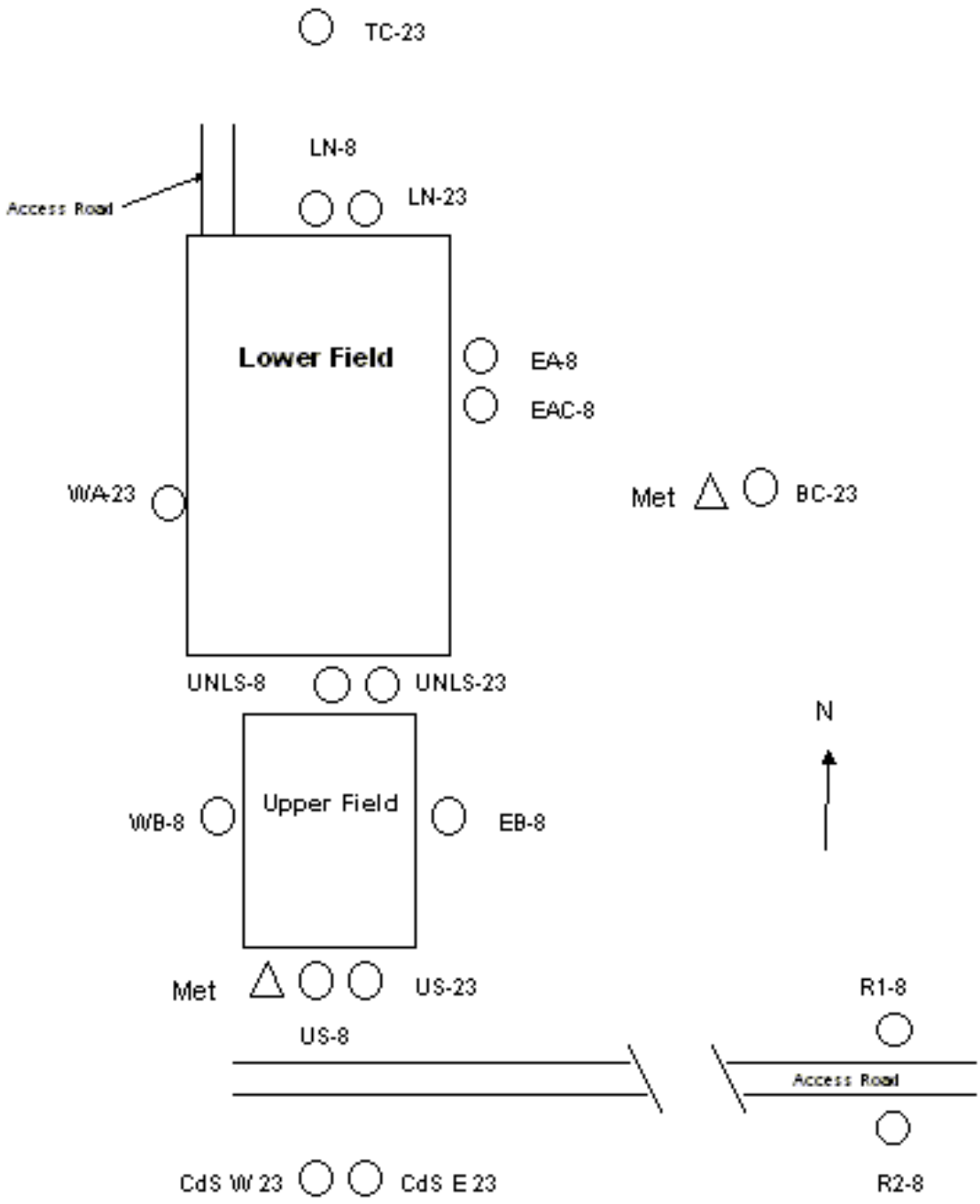
TC-23
LN-8
LN-23
Access Road
Lower Field
EA-8
EAC-8
WA-23
Met
BC-23
UNLS-8
UNLS-23
N
Upper Field
WB-8
EB-8
Met
US-23
US-8
R1-8
Access Road
R2-8
CdS W 23
CdS E 23