Executive Order G-70-187
Exhibit 2
Figure 4B

TYPICAL ABOVEGROUND TANK INSTALLATION WITH A 100 JET PUMP

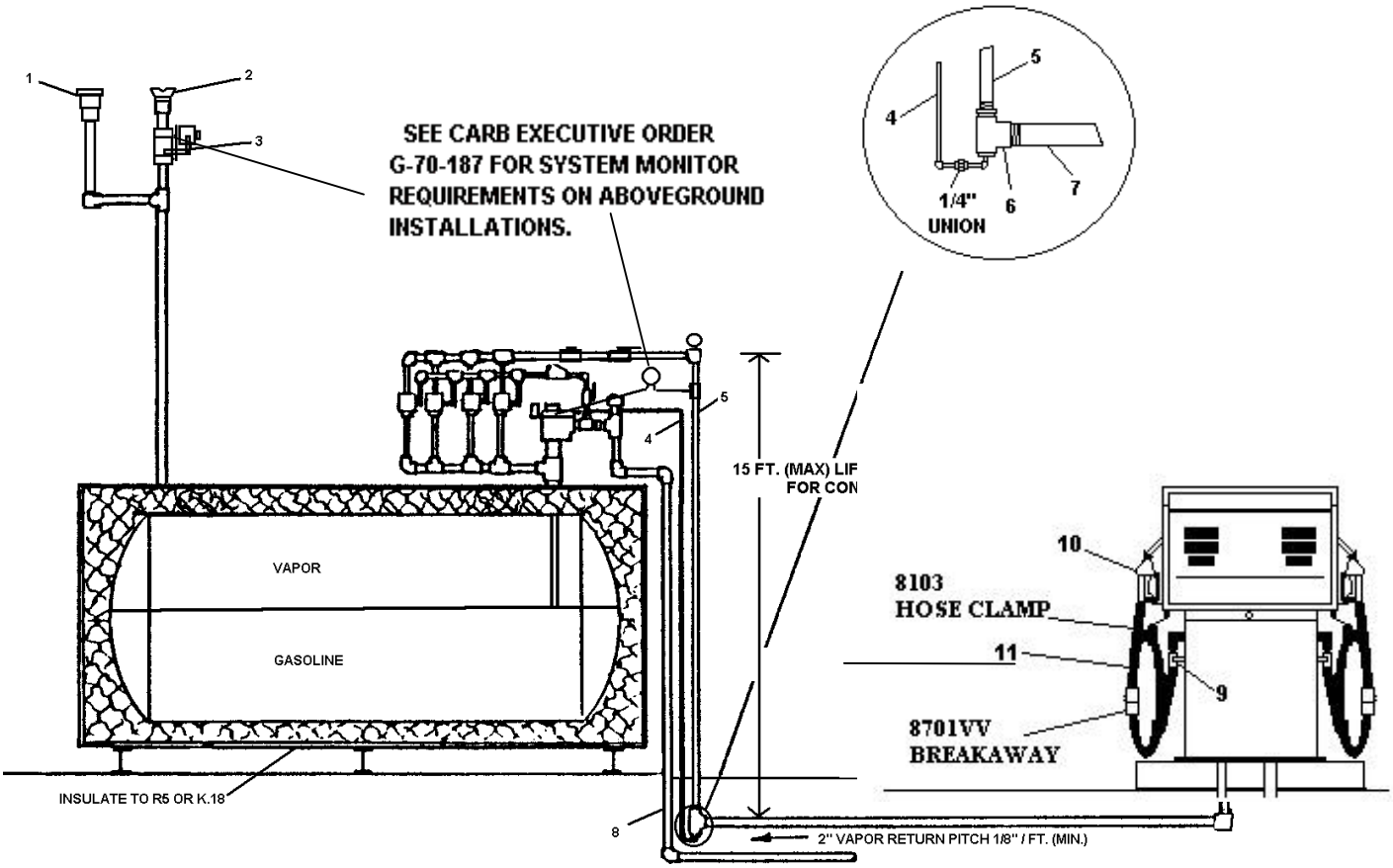

1. +3"wc, - 8"wc P/V Vent Valve, Healy Part #HPVV
2. +1.5"wc Pressure Vent Valve, Healy Part # HPV1.5
3. Vent Sensor Assembly, Healy Part # 6275
4. ¼" Condensate Line
5. 1" Vapor Return Line
6. 2" TEE
7. 2" Vapor Return Line
8. 2" Product Line
9. Vapor Adapter, Healy Part # CX6-VV1A
10. Nozzle, Healy # 400 ORVR
11. Coaxial Hose Assembly, Healy Series #75B with Hose Clamp & Breakaway