State of California
AIR RESOURCES BOARD

Executive Order G-70-132

Certification of Trusco Tank, Inc.
Supervault Aboveground Storage Tank
Filling/Dispensing Vapor Recovery System

WHEREAS, the Air Resources Board (the "Board") has established, pursuant to Sections 39600, 39601, and 41954 of the Health and Safety Code, certification procedures for systems designed for the control of gasoline vapor emissions displaced during the filling of storage tanks at service stations ("Phase I vapor recovery systems") and for the control of gasoline vapor emissions from motor vehicle fueling operations ("Phase II vapor recovery systems") in its "Certification Procedures for Gasoline Vapor Recovery Systems at Service Stations" as last amended December 4, 1981 (the "Certification Procedures"), incorporated by reference in Section 94001 of Title 17, California Administrative Code;

WHEREAS, the Board has established, pursuant to Sections 39600, 39601, and 41954 of the Health and Safety Code, test procedures for determining compliance of Phase I and Phase II vapor recovery systems with emission standards in its "Test Procedures for Determining the Efficiency of Gasoline Vapor Recovery Systems at Service Stations" as last amended September 1, 1982 (the "Test Procedures"), incorporated by reference in Section 94000 of Title 17, California Administrative Code;

WHEREAS, Trusco Tank, Inc., has applied for certification of the Supervault aboveground storage tank for balance Phase I and Phase II operation;

WHEREAS, Section VIII-A of the Certification Procedures provides that the Executive Officer shall issue an order of certification if he or she determines that a vapor recovery system conforms to all of the requirements set forth in Sections I through VII; and

WHEREAS, I find that the Trusco Tank, Inc., Supervault aboveground storage tank system, when used with ARB Certified Phase I and Phase II vapor recovery components, conforms with all the requirements set forth in Sections I through VII of the Certification Procedures;

NOW, THEREFORE, IT IS HEREBY ORDERED that this certification applies to the Trusco Tank, Inc., Supervault aboveground storage tanks of 2,000 gallons or less capacity. The system certified hereby is shown in Exhibit 1 attached. Air Resources Board certified Phase I components from Exhibits 1 thru 3 of Executive Order G-70-97-A and certified Phase II components from Executive Order G-70 series are to be used.

IT IS FURTHERED ORDERED that any emergency vent installed on the tanks be leak free at the operating pressure of the tank when tested in accordance with ARB Method 2-6, "Test Procedures for Gasoline Vapor Leak Detection Using Combustible Gas Detector" as last amended September 1, 1982 (the "Test Procedures"), incorporated by reference in Section 94000 of Title 17, California Administrative Code.

IT IS FURTHER ORDERED that the threaded stem normally used with the Bobtail truck bulk delivery nozzle be replaced with an OPW 633 BA coupling/adaptor along with an OPW 633 BD reducing coupler (or an equivalent arrangement that allows for no leakage of gasoline) to connect the Bobtail truck bulk delivery nozzle with the storage tank fill adaptor during transfer of gasoline from the delivery truck to the storage tank. An OPW 633 A or 633 F adaptor coupled with 633 B or 633 D adaptors or equivalent may be used for interchangeability of the nozzle stem and 633 BD reducing coupler.

IT IS FURTHER ORDERED that the general exterior of the storage tanks be painted white or off-white.

IT IS FURTHER ORDERED that compliance with the rules and regulations of the local air pollution control district and local fire officials with jurisdiction where the installed system is located, shall be made a condition of this certification.

IT IS FURTHER ORDERED that the use of a PV valve shall require the prior approval of the local fire chief, and that the tanks and piping shall comply with the appropriate General Industry Safety Orders and in particular the provisions of articles 144, 145, and 146 thereof.

IT IS FURTHER ORDERED that compliance with all applicable certification requirements and rules and regulations of the Division of Measurement Standards, the Office of the State Fire Marshal, and the Division of Occupational Safety and Health of the Department of Industrial Relations shall be made a condition of this certification.

IT IS FURTHER ORDERED that any alteration of the equipment, parts, design, or operation of the configurations certified hereby, is prohibited, and deemed inconsistent with this certification, unless such alteration has been approved by the undersigned or the Executive Officer's designee.

Executed this 16TH day of OCTOBER 1990, at Sacramento, California.

William W Sylte
for James D. Boyd
Executive Officer

Exhibit 1

Executive Order G-70-132

SUPERVAULT

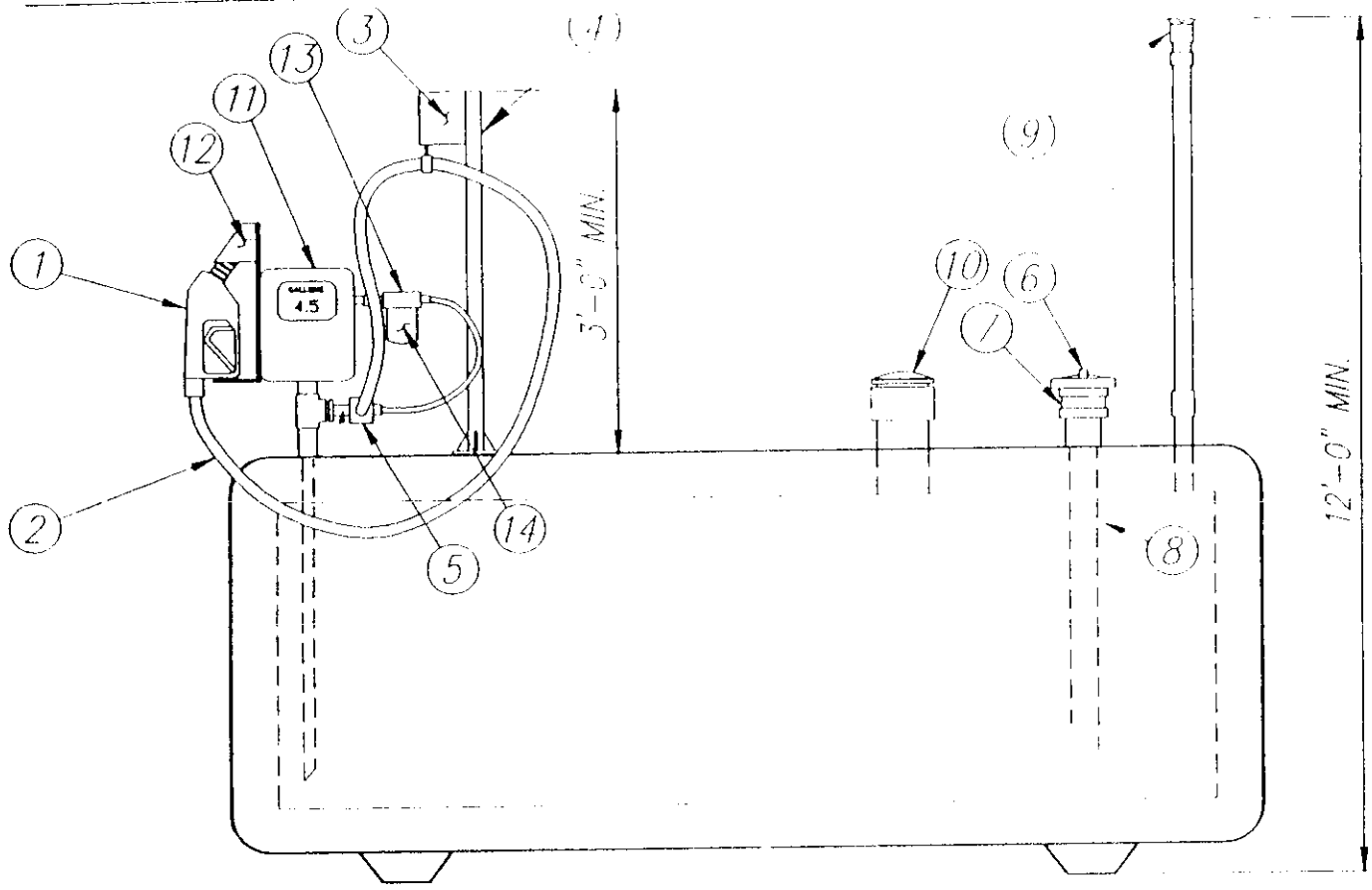

COMPONENT DESCRIPTION

1. VAPOR RECOVERY NOZZLE
2. COAXIAL HOSE ASSEMBLY
3. OVERHEAD HOSE RETRACTOR
4. HOSE RETRACTOR BASE
5. COAXIAL ADAPTOR
6. FILL CAP
7. FILL ADAPTOR
8. COAXIAL DROP TUBE
9. PRESSURE/VACUUM VENT VALVE
10. EMERGENCY VENT
11. PUMP
12. NOZZLE HOOK & PROTECTIVE HO
13. FILTER ADAPTOR
14. FILTER ELEMENT

Notes:

See Executive Order G-70-97-A (Exhibits 1,2 & 3) for listing of ARB certified Phase I two-point and coaxial vapor recovery equipment and pressure/vacuum valves for storage tanks.

See Executive Order G-70 series for ARB certified Phase II vapor recovery equipment.

Inner holding tank must have a minimum of 6 inches of exterior concrete insulation.