State of California
AIR RESOURCES BOARD

Executive Order G-70-168

Bryant Fuel Systems
Phase I Vapor Recovery Systems

WHEREAS, the Air Resources Board ("Board"), pursuant to California Health and Safety Code sections 39600, 39601, and 41954, has adopted Title 17 California Code of Regulations section 94002, which provides that gasoline vapor recovery systems at bulk plants shall be certified in accordance with the Board's "Certification and Test Procedures for Vapor Recovery Systems at Gasoline Bulk Plants" adopted April 18, 1977, as last amended September 12, 1990 (the "Certification and Test Procedures");

WHEREAS, Bryant Fuel Systems have applied for certification of their gasoline bulk plant vapor recovery systems;

WHEREAS, Section VII.A. of the Certification and Test Procedures provides that the Executive Officer shall issue an order of certification if he or she determines that a vapor recovery system conforms to all of the requirements set forth in paragraphs I through VI; and

WHEREAS, the Bryant Fuel Systems gasoline bulk plant vapor recovery systems have been evaluated pursuant to the Certification and Test Procedures;

WHEREAS, I, James D. Boyd, Air Resources Board Executive Officer, find that the Bryant Fuel Systems gasoline bulk plant vapor recovery systems conform with all of the requirements set forth in paragraphs I through VI of the Certification and Test Procedures.

NOW, THEREFORE, IT IS ORDERED that the Bryant Fuel Systems gasoline bulk plant vapor recovery systems are hereby certified to meet the applicable certification performance standards for Phase I vapor recovery. The systems certified by this order may be used on cylindrical tanks between 1,000 and 12,000 gallons total capacity which utilize a vapor processor as shown in Exhibit 1 (attached) and on cylindrical tanks between 1,000 and 12,000 gallons total capacity which do not utilize a vapor processor as shown in Exhibit 2 (attached) and Exhibit 3 (attached). System components shall be as specified in Exhibit 4 (attached).

BE IT FURTHER ORDERED that the pressure/vacuum relief vent installed in the manway on the tanks be leak free at the operating pressure of the tank when tested in accordance with ARB test methods as specified in Title 17, California Code of Regulations.

BE IT FURTHER ORDERED that an Air Resource Board certified P/V valve shall be installed on the tank vent for systems that do not utilize a vapor processor and that the valve have a rated pressure relief setting of no less then 8 ounces per square inch. The installed P/V valve shall extend to a minimum height of 12 feet above grade.

BE IT FURTHER ORDERED that any liquid leak upon disconnecting the product delivery line(s) when filling the tank or loading transport vehicles shall be no more than 10 ml per disconnect computed from the average of three disconnect operations.

BE IT FURTHER ORDERED that compliance with the applicable certification requirements and rules and regulations of the Division of Measurement Standards, the State Fire Marshal's Office and the Division of Occupational Safety and Health is made a condition of this certification.

BE IT FURTHER ORDERED that compliance with the rules and regulations of the local air pollution control district with jurisdiction over the location of the installed system, shall be made a condition of this certification.

BE IT FURTHER ORDERED that the tank and associated piping and other equipment not specifically listed as approved Phase I equipment in Exhibits 1 through 3 of Executive Order G-70-97-A shall comply with the rules and regulations of the local fire officials with jurisdiction over the location where the system is installed.

BE IT FURTHER ORDERED that any alteration in the equipment, parts, design or operation of the Systems certified is prohibited, and deemed inconsistent with this certification, unless the alteration has been approved by the Air Resources Board Executive Officer or his or her designee.

Executed this 15 day of October, 1995, at Sacramento, California.

James D. Boyd
Executive Officer

Exhibit 1

Executive Order G-70-168

Bryant Fuel Systems
Aboveground Tank Phase I Vapor Recovery System
with Vapor Processor

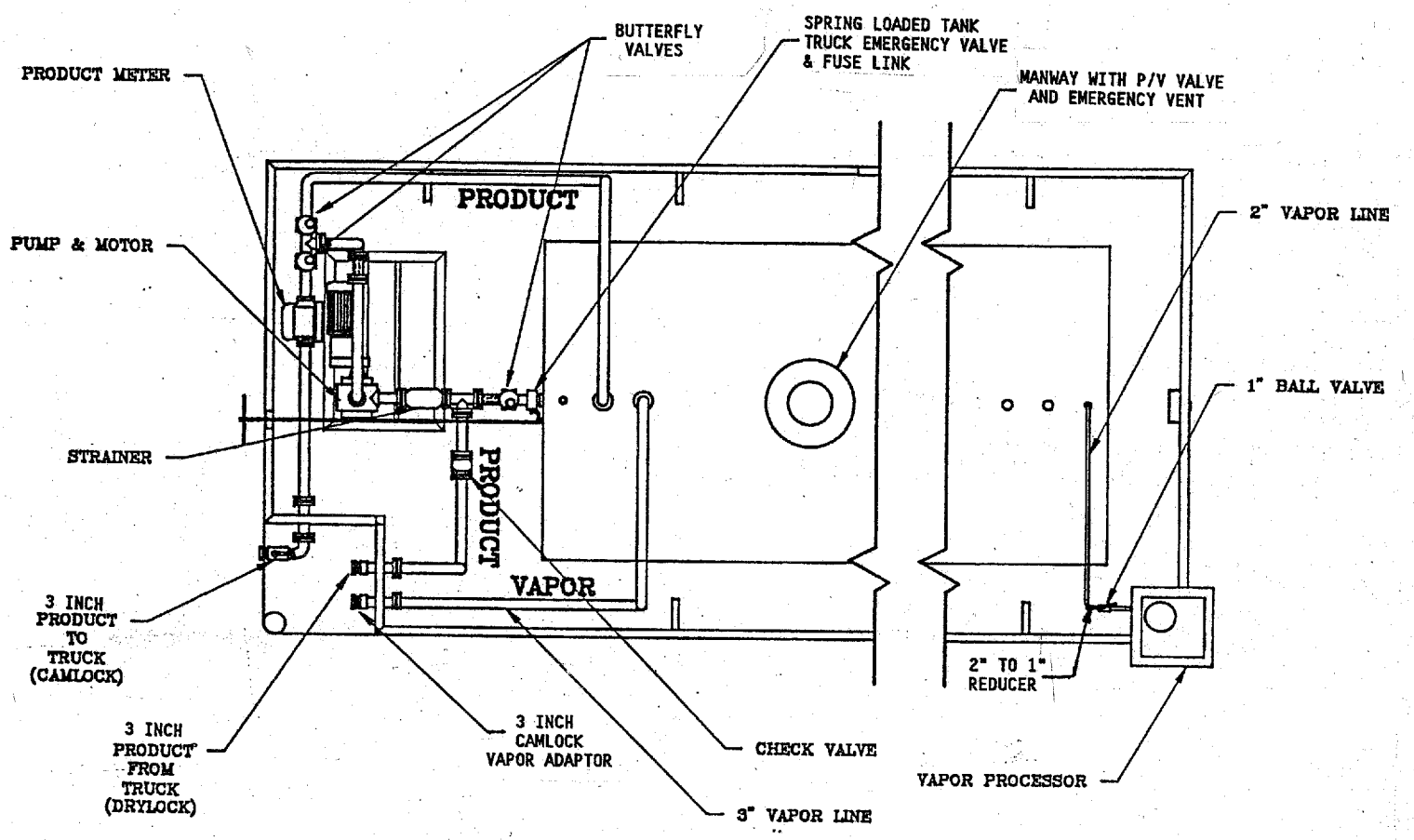

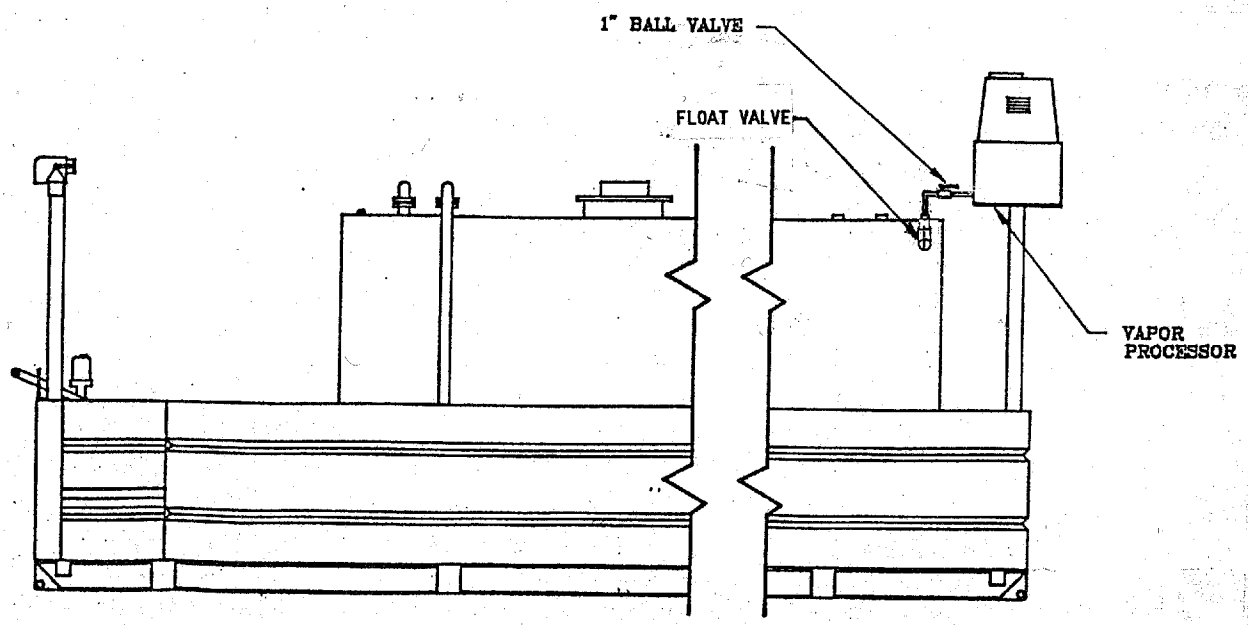

Exhibit 2

Executive Order G-70-168

Bryant Fuel Systems
Aboveground Tank Phase I Vapor Recovery System
without Vapor Processor

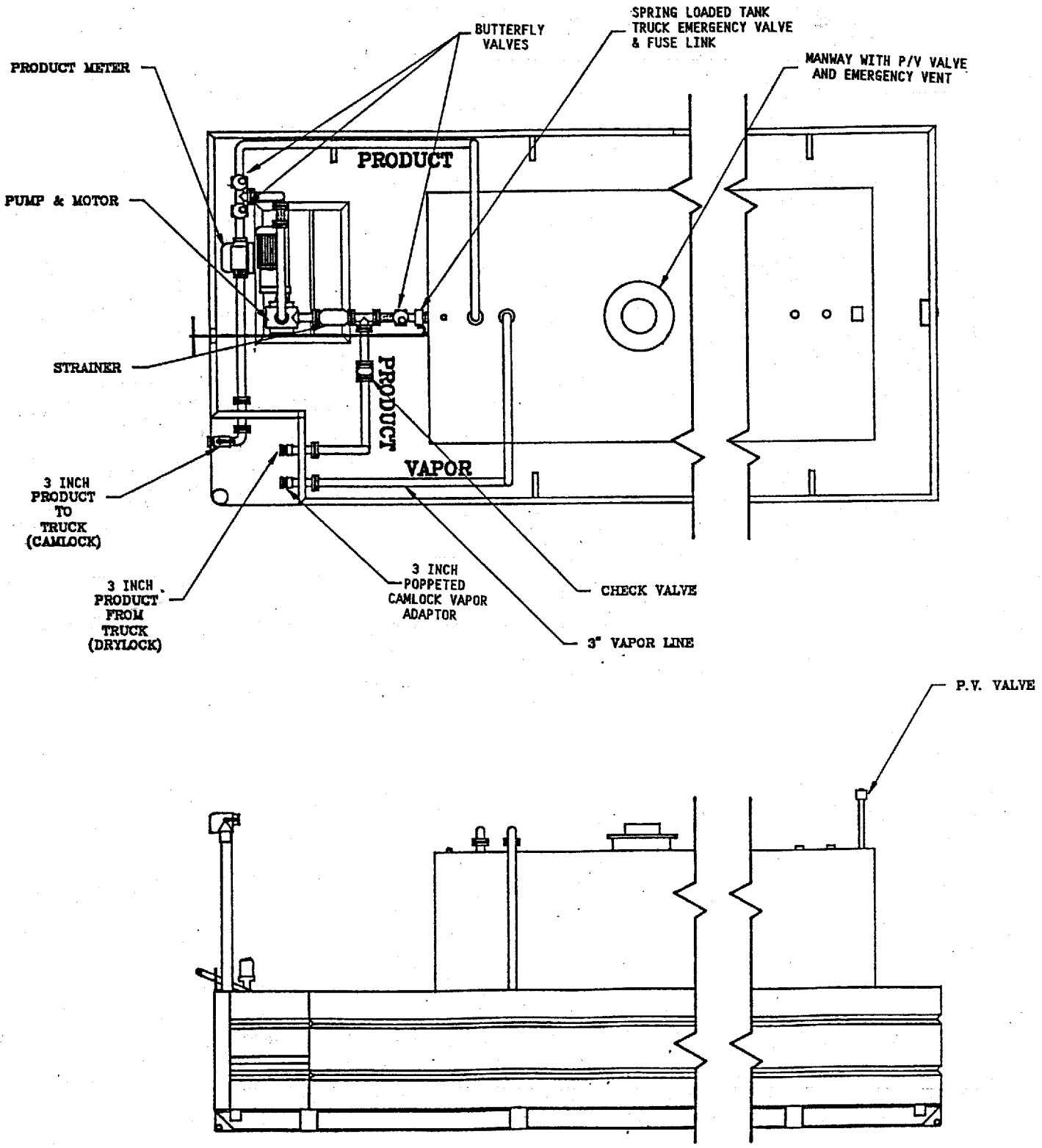

Exhibit 3

Executive Order G-70-168

Bryant Fuel Systems
Aboveground Tank Phase I Vapor Recovery System
without Vapor Processor with the
Addition of a Slug Valve and a Filter

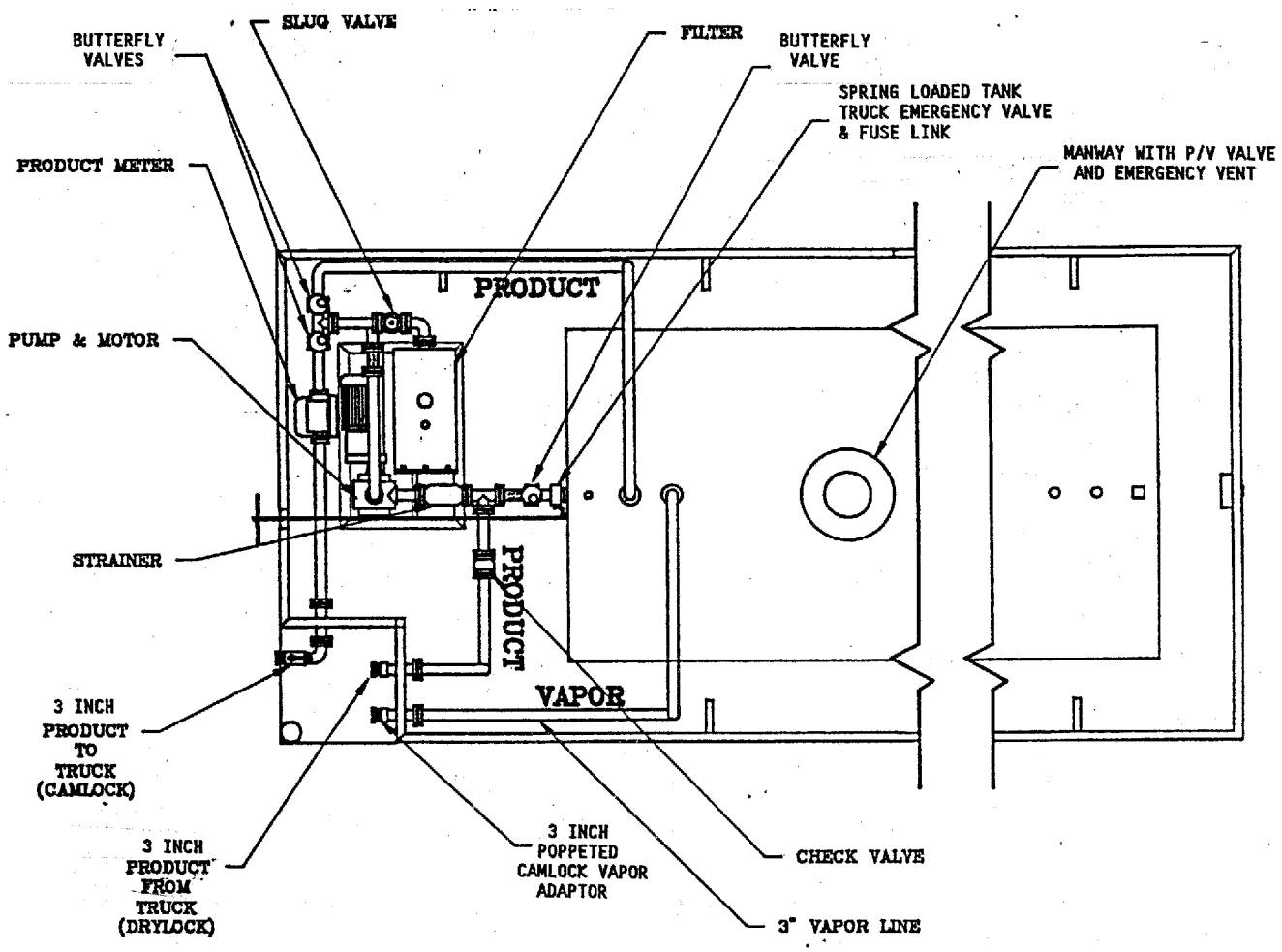

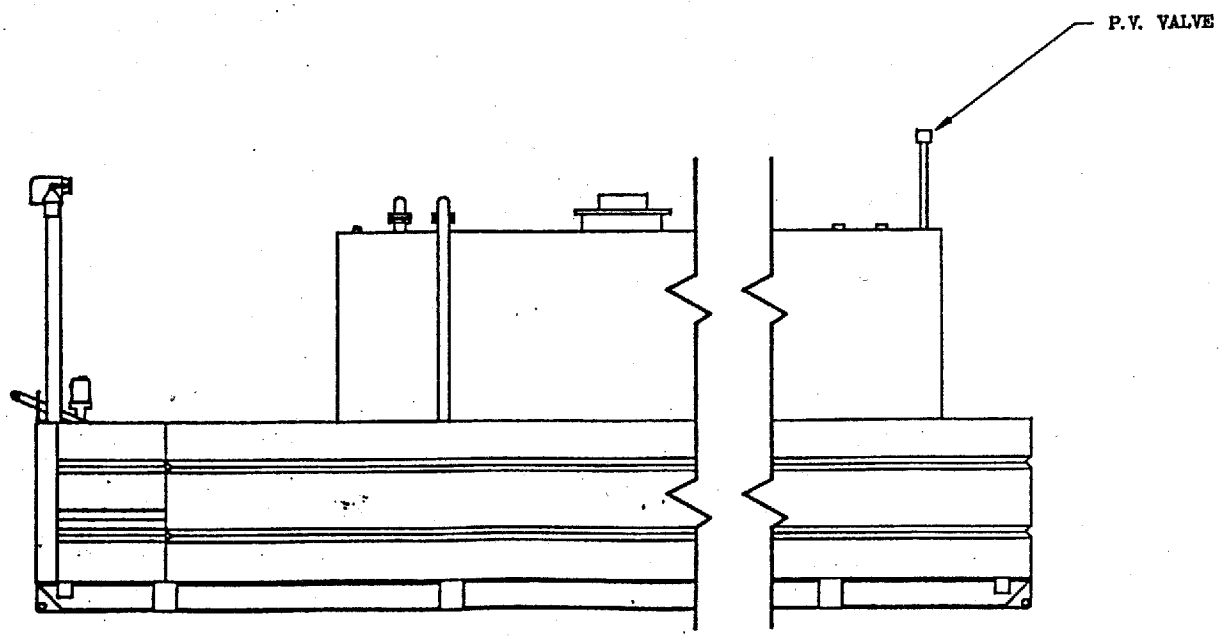

Exhibit 4

Executive Order G-70-168

Bryant Fuel Systems
Aboveground Tank Phase I Vapor Recovery System
System Component Specifications

Exhibit 1 Specific Components

Vapor Processor

Hirt VCS-200; State Fire Marshal Identification Number: 004:015:1.

Float Vent Valve

Air Resources Board certified per Executive Order G-70-97 series.
Valve installed internally to welded fitting.

Vapor Return Line Adaptor

3 inch Camlock adaptor.

Exhibits 2 and 3 Specific Components

Pressure/Vacuum Relief Valve

8 ounce PSI pressure setting; 1/2 ounce PSI vacuum setting.
Air Resources Board certified per Executive Order G-70-97 series.

Vapor Return Line Adaptor

Poppeted adaptor (spring loaded check valve).
Air Resources Board certified per Executive Order G-70-97 series.

Exhibits 1, 2 and 3 Specific Components

Manway with Pressure/Vacuum Relief Valve and Emergency Vent

1 pound PSI pressure setting; 6 ounces PSI vacuum setting.
Equipment shall be leak free when tested in accordance with ARB test methods as specified in Title 17, California Code of Regulations.

Fill Adaptor for Filling of Tank

3" dry-break adaptor (Kamvalok type).

Fill Adaptor for Loading of Trucks

3" Camlock.

Notes:

1. Liquid service lines are 3 inches in diameter.
2. Butterfly valves may be operated manually or automatically by electric actuators.