State of California
AIR RESOURCES BOARD

EXECUTIVE ORDER G-70-181-A

Relating to Certification of the Hirt VCS400-7 Bootless Nozzle
Phase II Vapor Recovery System for Aboveground Storage Tank Systems

WHEREAS, the California Air Resources Board (ARB) has established, pursuant to California Health and Safety Code sections 39600, 39601 and 41954, certification procedures for systems designed for the control of gasoline vapor emissions during motor vehicle fueling operations (Phase II vapor recovery systems) in its **"CP-205 Certification Procedure for Vapor Recovery Systems of Novel Facilities"** (the Certification Procedure) adopted on April 12, 1996, and as last amended on March 17, 1999, incorporated by reference into title 17, California Code of Regulations, section 94015;

WHEREAS, ARB has established, pursuant to California Health and Safety Code sections 39600, 39601 and 41954, test procedures for determining the compliance of Phase II vapor recovery systems with emission standards TP-202.2 **"Determination of Efficiency of Phase II Vapor Recovery Systems of Novel Facilities,"** ("the Test Procedures") as last amended on March 17, 1999, incorporated by reference into title 17, California Code of Regulations, section 94015;

WHEREAS, Hirt Combustion Engineers, Incorporated (the manufacturer) has requested certification of the VCS400-7 Bootless Nozzle Phase II Vapor Recovery System (the system) for use with previously certified aboveground storage tank Phase I vapor recovery systems pursuant to the Certification Procedures and Test Procedures;

WHEREAS, the Executive Officer has determined, pursuant to section 3.1 of the Certification Procedure that components used in installations of the system with aboveground storage tank Phase I systems must meet the same performance standards and specifications met during certification under Vapor Recovery Certification Procedure CP-201, **"Certification Procedure for Vapor Recovery Systems at Gasoline Dispensing Facilities"**;

WHEREAS, the system has been evaluated pursuant to the Certification Procedure;

WHEREAS, section 7 of the Certification Procedure provides that the Executive Officer shall issue an order of certification if he or she determines that the system conforms to all of the requirements set forth in section 1 through 6 of the Certification Procedure;

WHEREAS, on July 24, 2001, in Executive Order G-01-032, ARB Executive Officer delegated to the Chief of the Monitoring and Laboratory Division, full authority to approve and grant Executive Orders (EO) certifying Phase I and Phase II vapor recovery systems for aboveground tank systems in accordance with "CP-201, **Certification Procedure for**

Vapor Recovery Systems of Gasoline Dispensing Facilities" and the Certification Procedure, incorporated by reference into title 17, California Code of Regulations sections 94011 and 94015, respectively; and

WHEREAS, I, William V. Loscutoff, Chief of the Monitoring Laboratory Division, find that the system conforms with all the requirements set forth in the Certification Procedure and results in a vapor recovery system which is at least 95 percent effective for attendant and/or self-serve use when used in conjunction with a previously certified aboveground storage tank Phase I vapor recovery system and meeting the requirements contained in Exhibit 2 of this Order.

NOW, THEREFORE, IT IS HEREBY ORDERED that the system is certified to be at least 95 percent effective in attended and/or self-service mode when used with a previously certified aboveground storage tank Phase I vapor recovery system and which meets the requirements as specified in Exhibits 1 and 2**. The system is certified per Non-Enhanced Vapor Recovery (EVR) standards, specifications, and requirements. Compatibility of this system with onboard refueling vapor recovery (ORVR) systems has not been evaluated to determine the emissions impact for aboveground storage tanks. Fugitive emissions, which may occur when the aboveground storage tanks are under positive pressure have not been quantified and were not included in the calculation of system effectiveness.** Exhibit 1 contains a list of the equipment certified for use with the system. Exhibit 2 specifies installation and performance specifications for the system. Exhibit 3 contains the ten-gallon per minute maximum fueling rate compliance verification procedure. Exhibit 4 lists the ARB approved manufacturer's manuals.

IT IS FURTHER ORDERED that the owner or operator of the installation shall conduct, and pass, an Air-to Liquid Ratio test as specified in TP-201.5 as adopted on April 12, 1996, no later than 60 calendar days after startup and at least once in each twelve month period. The test results shall be made available to the local air pollution control or air quality management district upon request within fifteen calendar days after the tests are conducted. Test results shall be submitted to the district in the format specified by the district.

IT IS FURTHER ORDERED that annual static pressure decay testing is not required as the integrity of the system is continually monitored. If such testing is conducted per TP-201.3B, only commercial nitrogen shall be used to take the tanks from the operating vacuum level to the test pressure of 2" water column.

IT IS FURTHER ORDERED that the system, as installed, shall comply with the procedures and performance standards the test installation was required to meet during certification testing. If, in the judgment of the Executive Officer, a significant fraction of the installations fails to meet the specifications of this certification, or if a significant portion of the vehicle population is found to have configurations which significantly impair the system's collection efficiency, the certification itself may be subject to modification,

suspension or revocation. “Significant” shall be determined by the appropriate statistical method depending on the type of failure, i.e. new equipment failures, random failures or fatigue failures.

IT IS FURTHER ORDERED that compliance with the certification requirements and rules and regulations of the Division of Measurement Standards of the Department of Food and Agriculture, the Office of the State Fire Marshal of the Department of Forestry and Fire Protection, and the Division of Occupational Safety and Health of the Department of Industrial Relations are made a condition of this certification.

IT IS FURTHER ORDERED that the system shall, at a minimum, be operated in accordance with the manufacturer's recommended operation and maintenance procedures as approved by ARB. The current ARB approved versions of the manufacturer’s manuals are listed in Exhibit 4. Revisions to the manufacturer’s manuals shall be approved in writing by the Executive Officer. The Executive Officer may add or delete instructions from the manuals and distribute revised copies in accordance with CP-201.

IT IS FURTHER ORDERED that the manufacturer shall provide, to the station or facility owner, operator or designee, ARB-approved copies of the operation and maintenance manuals for the system. The manufacturer or a factory authorized representative shall provide, to the station manager or other responsible individual, instructions in the proper use of the system, its repair and maintenance schedules, and locations where system and/or component replacements can be readily obtained.

IT IS FURTHER ORDERED that a copy of this Executive Order and the installation and maintenance manuals for the system shall be kept at the facility for service station type operations or at a central location for remote or unattended locations. This information shall be made available to district staff upon request.

IT IS FURTHER ORDERED that the manufacturer shall warranty the system for at least one year, in writing, to the ultimate purchaser and each subsequent purchaser, that the vapor recovery system is designed, built and equipped so as to conform, at the time of original installation or sale, with the applicable regulations and is free from defects in materials and workmanship which would cause the vapor recovery system to fail to conform with applicable regulations. The manufacturer shall provide copies of the manufacturer's warranty for the system, to the station manager, owner or operator. Hoses, nozzles and breakaway couplings shall be warranted to the ultimate purchaser as specified above for at least one year, or for the expected useful life, whichever is longer.

IT IS FURTHER ORDERED that any alteration of the equipment, parts, design, or operation of the systems certified hereby is prohibited unless such alteration has been approved by the Executive Officer or his or her designee. Any unapproved alteration shall void the certification for the specific installation where such alteration occurred.

IT IS FURTHER ORDERED that the certification of the Hirt VCS400-7 Bootless Nozzle

IT IS FURTHER ORDERED that the certification of the Hirt VCS400-7 Bootless Nozzle Phase II Vapor Recovery System for aboveground storage tank systems is valid through April 30, 2007.

IT IS FURTHER ORDERED that this Executive Order shall supersede Executive Order G-70-181 dated April 22, 2002.

Executed at Sacramento, California this 28th day of April 2006.

William V. Loscutoff, Chief
Monitoring and Laboratory Division

Attachments:
Exhibit 1 Equipment List for Hirt VCS400-7 Bootless Nozzle System
Exhibit 2 Specifications for the Hirt VCS400-7 System
Exhibit 3 Ten Gallon Per Minute Limitation Compliance Verification Procedure
Exhibit 4 ARB Approved Manufacturer's Manuals

Executive Order G-70-181-A

Exhibit 1

Equipment List for
Hirt VCS400-7 Bootless Nozzle System
For Aboveground Storage Tanks

Component	Manufacturer/Model	State Fire Marshal Identification Number
Nozzle	OPW Model 11VA-29 (see Exhibit 2, Figure 2C)	005:008:050
Coaxial Hoses	Any ARB-certified coaxial hose listed in the current revision of Executive Order G-70-52. OR Any coaxial hose ARB-certified for use with the Hirt VCS400-7 system.	
Liquid Removal System	Any system which has been ARB-certified for use with standard coaxial hoses.	
Processor Unit	Hirt Model VCS400-7 dual rate processor with Model # K12 mixing type nozzle burner and Gast Manufacturing Corporation Model R1102C-20 regenerative blower.	004:015:003
Pressure/Vacuum Valves	Pressure/Vacuum relief valves shall be certified and have the following pressure and vacuum settings, in inches of water column (wc): Pressure: three plus or minus one-half inches (3.0" ± 0.5") water column Vacuum: eight plus or minus two inches (8" ± 2") water column	
Certified Valves	Hazlett H-PVB-1 Gold label OR Any P/V valve which is ARB-certified specifically for the VCS400-7 system.	005:017:004
Process Control Recorder	Monarch Instrument Data Chart® Model DC-1100-1A3-0 with Memory Card Model MC512.	
Pressure/Vacuum Gauge	Magnehelic 10" water column vacuum to 10" water column pressure with graduations of 0.5" as illustrated in Figure 2E.	

Executive Order G-70-181-A

Exhibit 2

Specifications for the Hirt VCS400-7 System

1. Nozzles

1.1 Any nozzle with fewer than 5 unblocked vapor collection holes (18 holes total) is defined as an equipment defect which substantially impairs the effectiveness of the system in accordance with Health and Safety Code section 41960.2(c) and is subject to district enforcement action in accordance with Health and Safety Code section 41960.2(d). Any defective nozzle shall be immediately removed from service.

1.2 OPW 11VA-29 nozzles shall use a stainless steel spout assembly.

1.3 Any nozzle with a vapor valve leaking in excess of 0.10 CFH but less than 0.50 CFH as determined by the use of the equipment specified in TP-201.5 to determine the volumetric leak rate (without fueling) indicates that the equipment is not in good working order, but is not a defect specified pursuant to Health and Safety Code section 41960.2(c), and is subject to district enforcement action including action under Health and Safety Code section 41960.2(e). Any nozzle with a vapor valve leaking in excess of 0.50 CFH is defined as an equipment defect which substantially impairs the effectiveness of the system in accordance with Health and Safety Code section 41960.2(c) and is subject to district enforcement action in accordance with Health and Safety Code section 41960.2(d). Any nozzle with a defective vapor valve shall be immediately removed from service. The integrity of the system shall be restored by replacing the nozzle or otherwise closing the vapor path as soon as practicable.

1.4 Nozzles shall be 100 percent performance checked at the factory, including checks of all shutoff mechanisms and the integrity of the vapor path. The leak rate for the nozzle vapor path shall not exceed the following:

0.038 CFH at a pressure of at least two (2) inches water column
0.005 CFH at a vacuum of at least negative forty (40) inches water column.

2. Coaxial Hoses

2.1 Any hose with any visible puncture or tear equivalent to a hole with a diameter equal to 0.136 inches (3.5 mm) or less indicates that the system is not in good working order, but is not a defect specified pursuant to Health and Safety Code section 41960.2(c), and is subject to district enforcement action including action under Health and Safety Code section 41960.2(e). Any hose with any visible puncture or tear equivalent to a hole with a diameter greater than 0.136 inches (3.5 mm) is defined as an equipment defect which substantially impairs the effectiveness of the system in accordance with Health and Safety Code section 41960.2(c) and is subject to district enforcement action in accordance with Health and Safety Code section 41960.2(d). Any defective hose shall be immediately removed from service.

2.2 The hoses shall be installed in accordance with the configuration and specifications shown in Figure 2G.

3. Breakaway Couplings

Breakaway couplings may be installed at the option of the owner. If they are installed, only ARB-certified breakaways with a valve which closes the vapor path when separated shall be used.

4. VCS400-7 System

The VCS400-7 system maintains a slight vacuum on the entire system. There are two modes of operation, the Idle Mode and the Dispensing Mode. The Idle Mode operates when no dispensing is occurring and is set to maintain a minimum vacuum level between 4.2" water column (wc) and 4.3" wc. The Dispensing Mode operates when one or more of the dispenser switches are turned on and is set to maintain a minimum vacuum level of 4.5" wc. The dispensing mode has two burner rates, normal and high flow, with the high flow rate operating for a limited time to quickly bring the vacuum to the dispensing mode level from the idle mode level. Each vacuum level is controlled with vacuum switches and generated by a regenerative blower. Excess hydrocarbon vapors are drawn from the vapor recovery system and destroyed by thermal oxidation. The thermal oxidizer, vacuum switches and regenerative blower are located inside the processor.

4.1 If the system fails to maintain the idle mode vacuum level within 15 minutes of power on, an alarm will sound, a red lamp labeled ALARM will light, and a paperless recorder will mark the house voltage (approximately 120 VAC) to indicate an abnormal condition. Refer to section 5.6 of this Exhibit for more information.

4.2 If the system fails to maintain the idle mode vacuum level for more than 10 minutes during normal operation, an alarm will sound, a red lamp labeled ALARM will light, and a paperless recorder will mark the house voltage (approximately 120 VAC) to indicate an abnormal condition. Refer to section 5.6 of this Exhibit for more information.

4.3 The VCS400-7 system shall maintain an air to liquid (A/L) ratio, measured at a flowrate of at least six gallons per minute (6 gpm), as listed in the following table. A failure of any fueling point to meet the A/L ratio requirement is defined as a equipment defect which substantially impairs the effectiveness of the system in accordance with Health and Safety Code section 41960.2(c) and is subject to district enforcement action in accordance with Health and Safety Code section 41960.2(d). Any fueling point not meeting the A/L ratio requirement shall be removed from service. The A/L ratio shall be determined by using ARB test procedure TP-201.5 as adopted on April 12, 1996 and last amended on February 1, 2001. Alternative test procedures may be used if they are determined by the Executive Officer, in writing, to yield comparable results. Figure 2H illustrates the correct method for using the A/L adapter.

A/L Ratio

Flow Rate	Minimum A/L Ratio
6 to 8 gpm	1.45
>8 to 10 gpm	1.35

This test procedure returns air rather than vapor to the storage tank and may cause an increase in storage tank pressure with possible venting and/or affect process unit operation. Temporary conditions which are attributable to the test and which last for a period of one hour or less are not subject to district enforcement action.

4.4 The horizontal distance between the pressure/vacuum valve and the processor shall be not less than twenty (20) feet. The processor shall be installed in accordance with the ARB approved manufacturer's “Manual of Installation and Start-up” and State Fire Marshal regulations.

4.5 No dispensing shall be allowed when the processor unit is turned *OFF* unless the facility is operating under a district variance or upset/breakdown rule provision.

4.6 CalOSHA approved access to the process unit shall be provided immediately upon request by a representative of the local district.

4.7 The VCS400-7 system shall be installed and wired such that no dispensing can occur unless the system monitor is ON and operational (see electrical schematic in the Manual of Installation and Start-Up). This section shall be verified by turning the monitor OFF and ensuring that dispensing does not occur.

5. System Monitor

The VCS400-7 system shall have an operable system monitor.

5.1 The system monitor shall include a paperless recorder (see Figure 2B). The recorder data shall include the length of time the system operates at or above the minimum required idle mode vacuum level and the length of time the system operates below this level for periods longer than ten (10) minutes. The recorder shall store the data, with date and time, for 365 days.

5.2 The paperless chart graph keeps a record of the vacuum in the system. If the system is functioning normally, then the paperless unit will record (0) Volts AC at the sample rate of one per minute (see Figure 2F). If there is a condition which does not allow a vacuum of at least 4.2 inches water column to be maintained for at least ten (10) minutes, then the paperless unit will record approximately (120) Volts AC at the sample rate of one per minute (see Figure 2F). See section 5.6 for the procedures to be followed when an alarm is activated.

5.3 All monitor status data shall be available to an inspector at the system monitor control panel. The status data shall include the sample rate, scale, time, date, set password and start record mode for the paperless recorder. The manufacturer’s “Manual of Initiation and Annual Inspection” includes detailed instructions on the monitor setup.

5.4 The system monitor shall include an alarm system. For service station type operations the alarm system shall include an audible alarm (horn) and a visible alarm (red light). The audible alarm shall be located such that it can easily be heard by station personnel in the area most likely to be occupied during normal station operation (i.e., at the cash register). The audible alarm may be silenced for a one-hour period by depressing a push-button but shall resound should the system fail to reestablish the minimum idle mode vacuum level.

5.5 The alarm system shall be activated if any of the following conditions occur:

- System fails to achieve the minimum required idle mode vacuum level within 15 minutes of power on status.

- System fails to maintain the minimum required idle mode vacuum level for more than ten minutes during normal operation.
- One hour has elapsed since the button labeled ALARM SILENCE has been depressed and the system has not reestablished the required idle mode vacuum.

5.6 Temporary and extended abnormal conditions will result in an alarm. The system will automatically recover from a temporary abnormal condition, but the system will need a physical correction to recover from an extended abnormal condition.

a) Some examples of temporary abnormal conditions that could cause an alarm are:

1) Failure of the Phase I system component such as a leaky vapor return hose or a vapor return elbow that will no longer completely depress the vapor poppet.

2) Failed components on the bulk delivery truck such as a relief valve with a worn gasket or a loose Phase I system vapor hose adapter.

3) Any improper Phase I system connection and/or disconnection procedure(s) that allow atmospheric air to be ingested by the systems' operating vacuum.

4) Holding a spill valve open too long after the spilled gasoline drains back to the storage tank.

b) Some examples of extended abnormal conditions that can cause an alarm are:

1) Failure of a component at the gasoline dispensing facility such as a cut dispensing hose, a bad ignition module in the process unit, or a broken Phase I system vapor poppet.

2) Loose Phase I system adapters, debris stuck in the spill valves(s), drop tubes that leak, or debris in the P/V valve.

3) Installations that do not meet certification requirements.

5.7 Station personnel shall respond immediately in the event of a system alarm. The following steps shall be taken.

a) Press the button labeled *ALARM SILENCE* located on the control panel to silence the audible alarm. The facility operator shall inspect the vapor recovery system for cut dispensing hoses, loose Phase I system components, leaky nozzle vapor valves or spill valves or any other component which is allowing the system vacuum to ingest atmospheric air. If a physical correction is made, it shall be noted in the facility logbook. If the alarm occurred during or within one hour of a Phase I delivery, it shall be noted in the facility logbook.

b) Allow the system one hour to automatically re-establish the idle mode vacuum level.

c) If, after one hour, the audible alarm sounds again, the operator shall arrange for service on the vapor recovery system. Service on the system shall be initiated within 24 hours. The service technician shall determine the cause of the alarm.

d) If repairs are not completed within 24 hours of the system alarm, the operator shall contact the District regarding the alarm condition.

e) The operator shall write an explanation of the cause of the alarm and the corrective action taken in the facility logbook.

6. Phase II Vapor Recovery System

6.1 One 3/4" (nominal size) pipe may be used to return the vapor from no more than 1 bootless nozzle. One 1" (nominal size) pipe may be used to return the vapor from no more than 2 bootless nozzles that can dispense simultaneously. One 2" (nominal size) pipe may be used to return the vapor from no more than 5 bootless nozzles that can dispense simultaneously. One 3" (nominal size) pipe can be used to return the vapor from 6 or more bootless nozzles that can dispense simultaneously.

6.2 The dispenser-to-riser connection (either rigid or flexible gasoline resistant material) shall be installed so that any liquid in the lines will drain toward the Phase II line low point. The internal diameter of the connector, including all fittings, shall not be less than five-eighths (5/8) inch. The dispenser riser inside diameter shall be one inch or greater.

6.3 A condensate intercept tank or trap with an automatic liquid removal system shall be installed at the low point in the vapor return piping (see Figure 2A). The tank shall be installed in accordance with all local requirements.

6.4 All vapor return lines shall slope a minimum of 1/8 inch per foot. A slope of 1/4 inch or more per foot is recommended wherever feasible. The Phase II system shall be piped such that, except for the vapor check valve, there is no obstruction, liquid trap, turbine, aspirator, or ejector between the vapor collection nozzle and the low point intercept tank and between the intercept tank and the aboveground gasoline storage tank.

6.5 All exposed Phase II piping shall be painted white or off-white (with any color base) provided the reflectivity of the paint is 75 percent or better. Reflectivity shall be determined by visual comparison of the paint with paint color cards obtained from a paint manufacturer who uses the "Master Pallet Notation" to specify the paint color (e.g. 58YY *88*/180 where the number in italics is the paint reflectivity). The appropriate color card shall be available at the facility for service station type operations or at a central location for remote or unattended locations.

6.6 All vapor collected by the nozzles must pass through the ullage of at least one storage tank before reaching the processor. The vapor return piping from the dispensers and the piping leading to the processor shall be connected to the storage tank at two locations separated by horizontal distance of at least 2 feet for single tank installations (see Figure 2A). The vapor return piping from the dispensers and the piping leading to the processor shall be connected to the storage tank shall be connected at a second tank for multiple tank installations that have a common manifold.

6.7 A ball float valve shall be installed on the inlet to the vapor line leading to the processor to prevent liquid gasoline from reaching the processor.

6.8 A vacuum gauge (see Figure 2E) shall be installed in the dispensing housing located furthest from the aboveground gasoline storage tank to which the processor is connected. The gauge shall be installed by means of a "tee" and two ball valves. One end of the "tee" shall be connected directly to the gauge, the second end of the "tee" connected to the first ball valve (which is connected to the vacuum line) and the middle of the "tee" connected to the second ball valve (which opens to atmosphere). Both valves shall be closed and the atmospheric port capped except when the gauge is in

use. The ball valve to the vacuum line shall be opened to check the system vacuum. The atmospheric valve may be opened with the vacuum valve closed in order to check the gauge “zero”. A second gauge may also be connected to the atmospheric port with the ball valve to the system vacuum open to check the gauge accuracy.

6.9 The vapor recovery hose may not touch the island or ground when not in use. In the case of a dogbone island where the wider island ends protect the hose from damage by vehicle tires, the hose may touch the vertical face of the island at the option of the local air pollution control district.

7. Vapor Processor Piping

The VCS400-7 system shall be connected to the ullage of the aboveground storage tank with 2" (nominal size) pipe, minimum, with no internal restrictions or obstructions to the flow of vapors. The pipe size may be reduced to 1" nominal pipe size for up to a length of one (1) foot at the connection to the processor. The pipe shall slope to the storage tank sufficiently to prevent liquid blockage.

8. Storage Tank and Phase I System

8.1 The VCS400-7 system may be installed only in facilities in which the relationship between the drop tubes and the product pickup points comply with the specifications contained in Figure 2D. Other configurations will cause the system to ingest excess air when the gasoline level is low.

8.2 The Phase I system shall be an ARB-certified system which is in good working order. Coaxial Phase I systems shall not be used with new installations of the system. Replacement of storage tanks at existing facilities, or modifications which cause the installation of new or replacement Phase I vapor recovery equipment, are considered new installations with regard to this prohibition. An exception to this prohibition may be made for coaxial Phase I systems ARB-certified after January 1, 1994, as compatible for use with Phase II systems which require pressure/vacuum vent valves.

Where installation of the VCS400-7 system is made by retrofitting previously installed equipment, local districts may elect to allow existing coaxial Phase I systems to remain in use for a specifically identified period of time provided the following conditions are met:

a. the existing coaxial Phase I system is a poppeted, ARB-certified system; and

b. installation of the Phase II system requires no modification of the AST(s) and/or Phase I connections.

8.3 Spill containment boxes (when present) that have drain valves shall be maintained gastight as defined in ARB Source Test Methods, Volume 2, Vapor Recovery Definitions, D-200. Spill containment boxes with cover-actuated drain valves shall not be used in new installations (as defined above). Drain valves may be removed and the port plugged provided an alternate method of draining the spill container is defined (i.e., a hand pump maintained at the facility and/or on the product delivery trucks).

8.4 During Phase I transfer operations, no more than two products may be delivered simultaneously when one Phase I vapor return line is utilized and no more than three products may be delivered simultaneously when two vapor return lines are utilized.

8.5 The Phase I vapor recovery system operates under a vacuum. Ingestion of air into the storage tanks during product deliveries may cause the vapor/air mixture within the

storage tank to become explosive. In this case the burner will not operate. This will cause a loss of vacuum in the storage tank and lead to a substantial reduction of the recovery efficiency at the Phase II nozzle and the loss of vapors from the storage tank. The loss of vapors caused by this condition shall be minimized by adherence to the following practices for product delivery. Provided that such practices are not in conflict with established safety procedures, they shall be conducted as follows:

a) For two-point Phase I systems, the vapor return hose is connected to the delivery tank and to the delivery elbow before the elbow is connected to the facility storage tank;

b) The delivery tank internal valves are opened only after all vapor connections have been made and closed before disconnecting any vapor return hoses; and

c) The vapor return hose is disconnected from the facility storage tank before it is disconnected from the delivery tank.

The delivery truck driver is subject to district enforcement action for failure to follow these practices.

9. <u>Dispensing Rate</u>

The dispensing rate for installations of the Hirt VCS 400-7 Bootless Nozzle System shall not exceed ten (10.0) gallons per minute for any nozzle at any time of operation. The dispensing rate shall be verified as specified in Exhibit 3, “Ten Gallon Per Minute Limitation Compliance Verification Procedure.”

Executive Order G-70-181-A
Exhibit 2
Figure 2A
Typical Installation of the Hirt VCS-400-7 Vacuum Assist Phase II Vapor Recovery System for Aboveground Storage Tank Systems

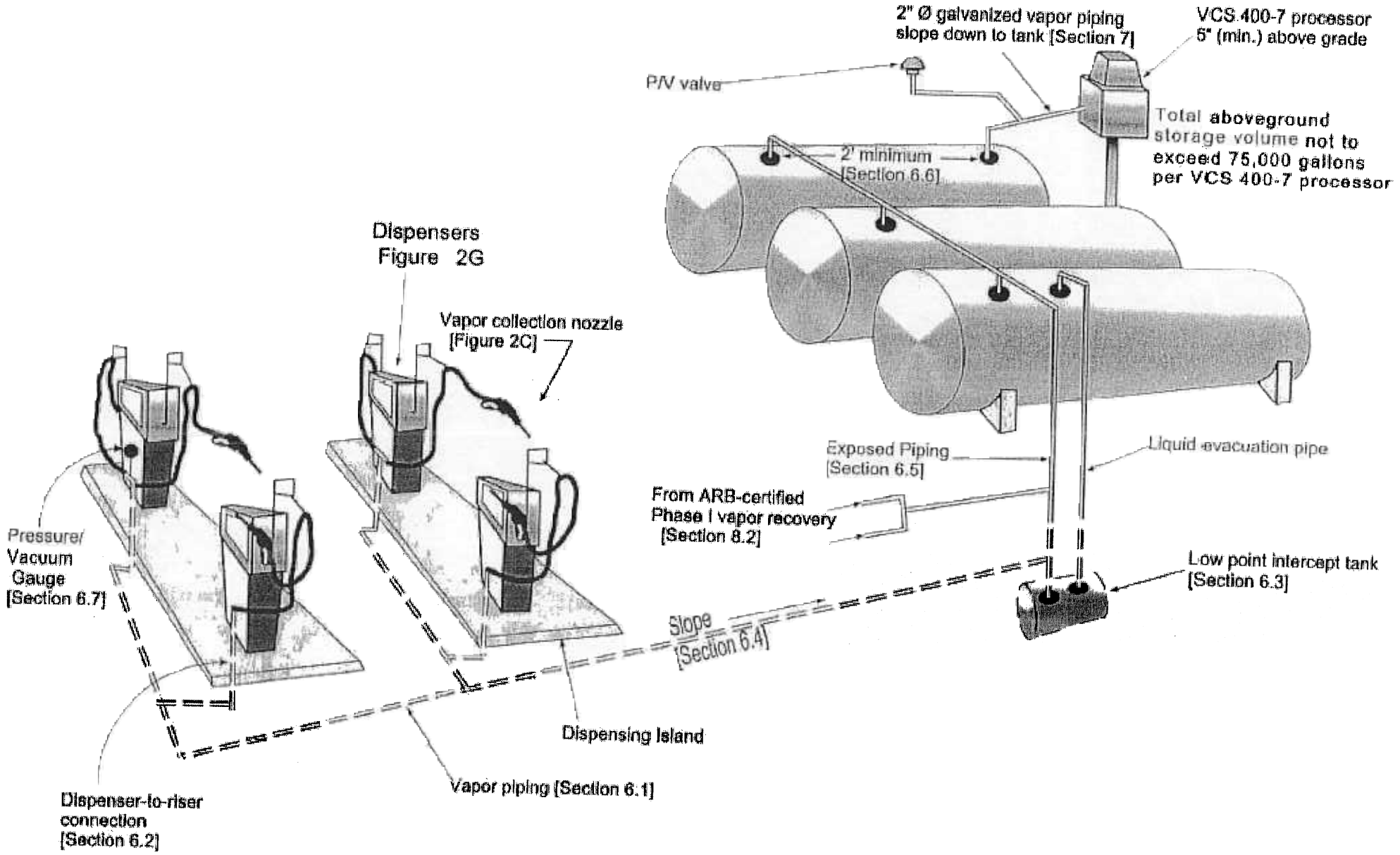

Executive Order G-70-181-A

Exhibit 2

Figure 2B

Control Panel Configuration

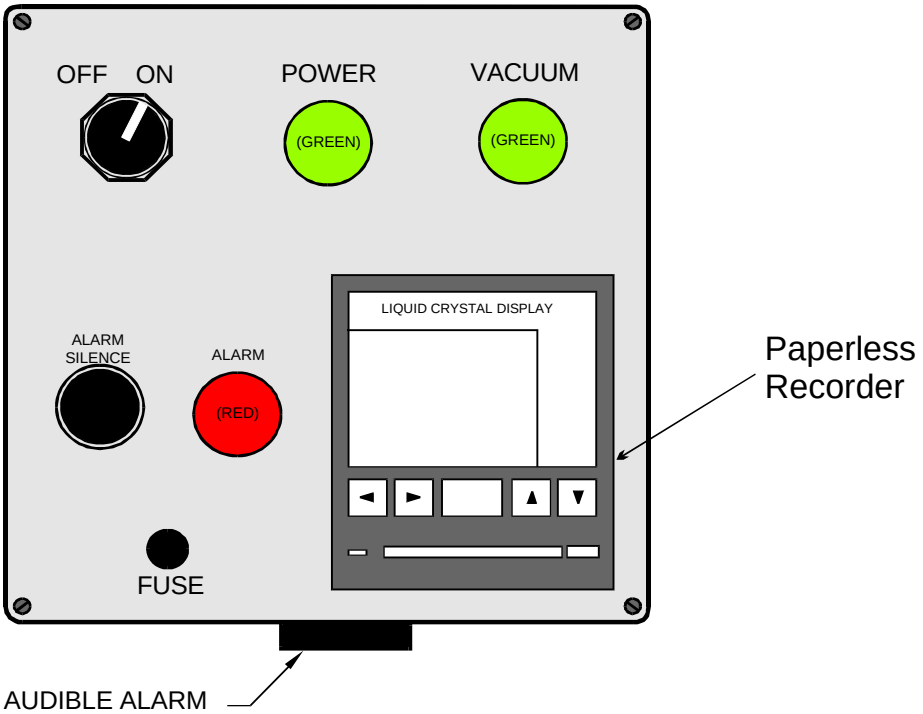

Alternate Panel Configuration

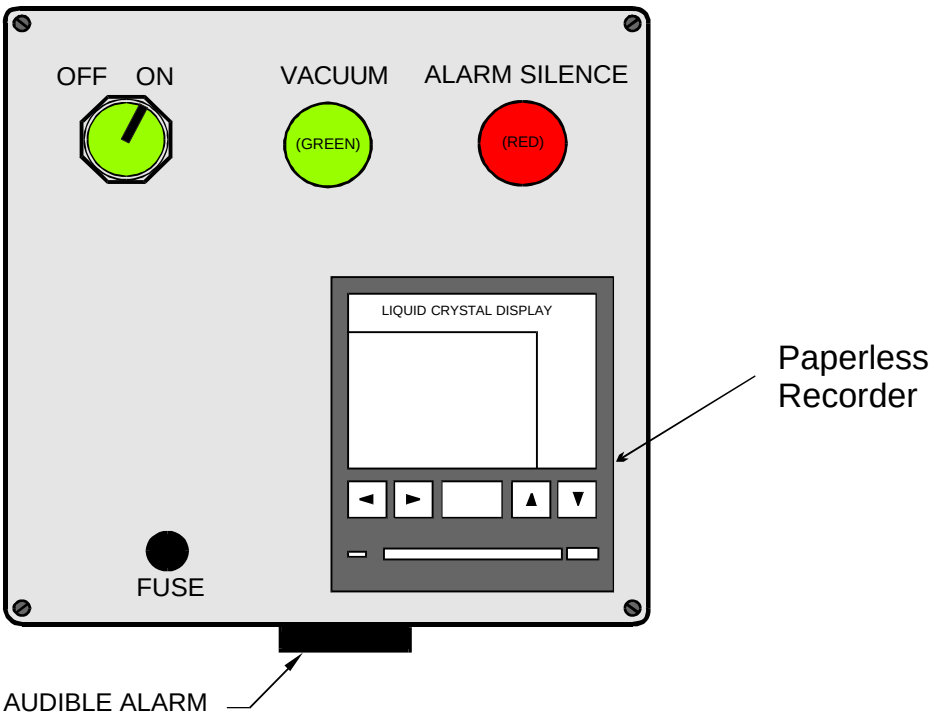

Executive Order G-70-181-A
Exhibit 2
Figure 2C

OPW Model 11VA-29 with Stainless Steel Spout for Hirt VCS400-7 System

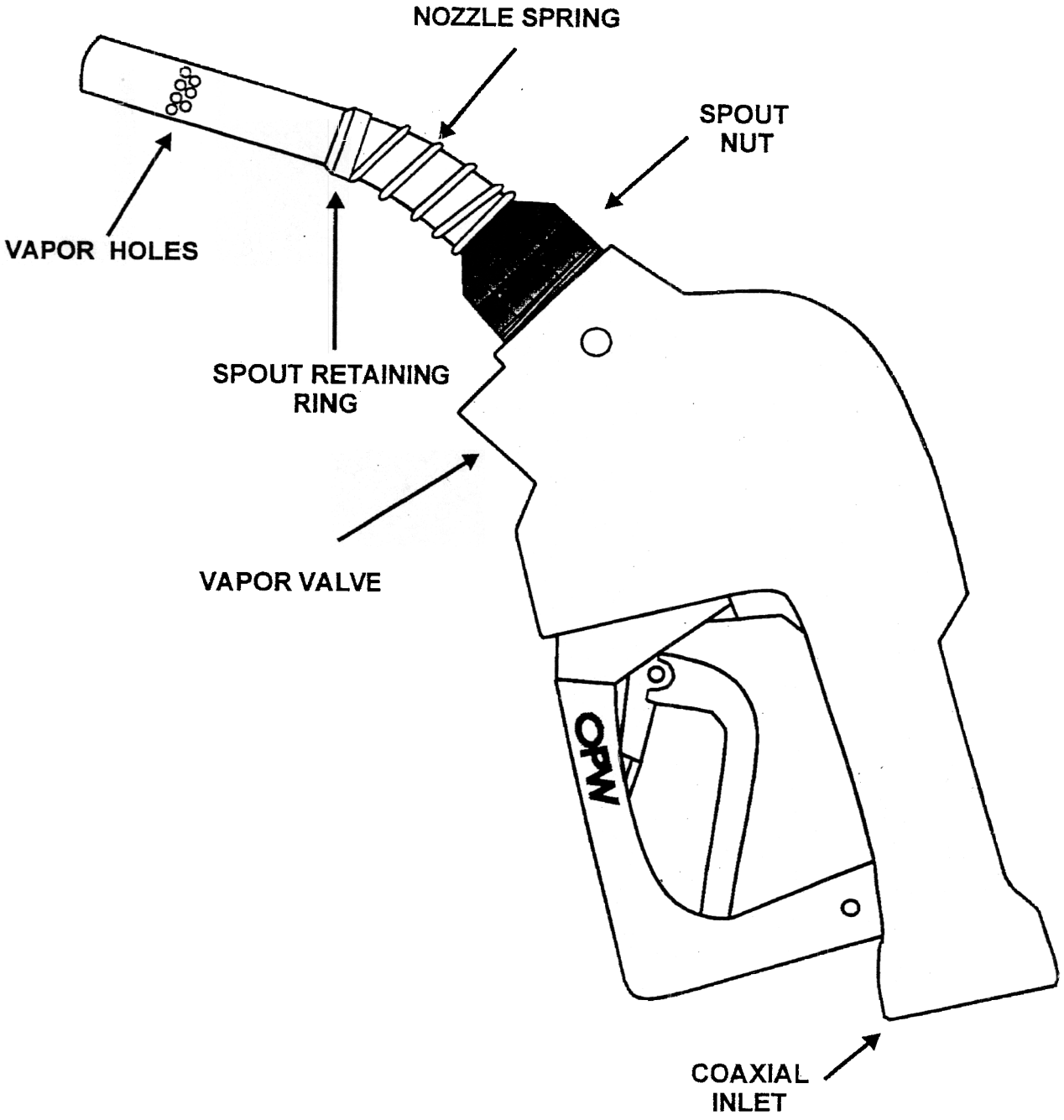

Executive Order G-70-181-A
Exhibit 2
Figure 2D

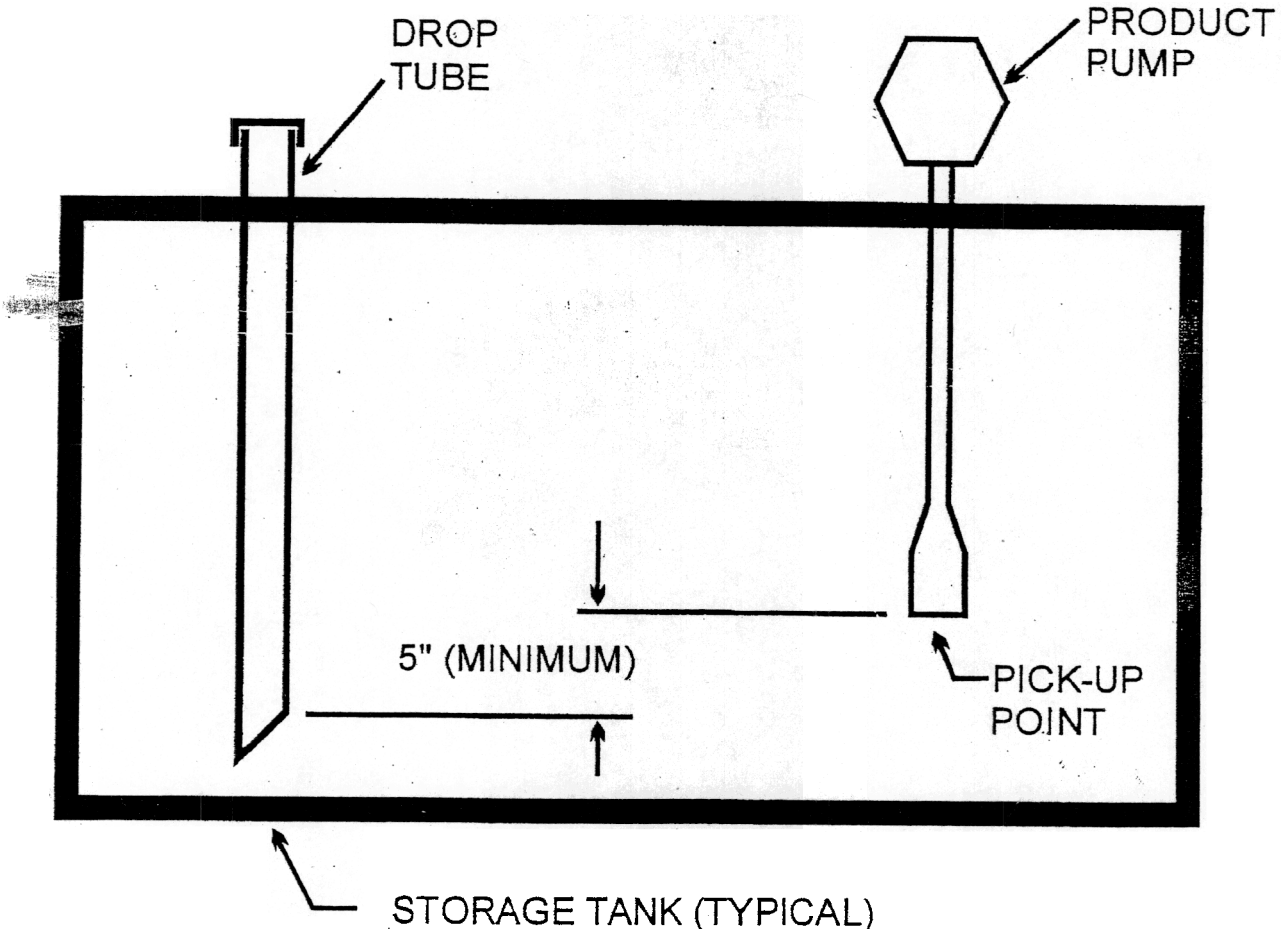

Executive Order G-70-181-A

Exhibit 2

Figure 2E

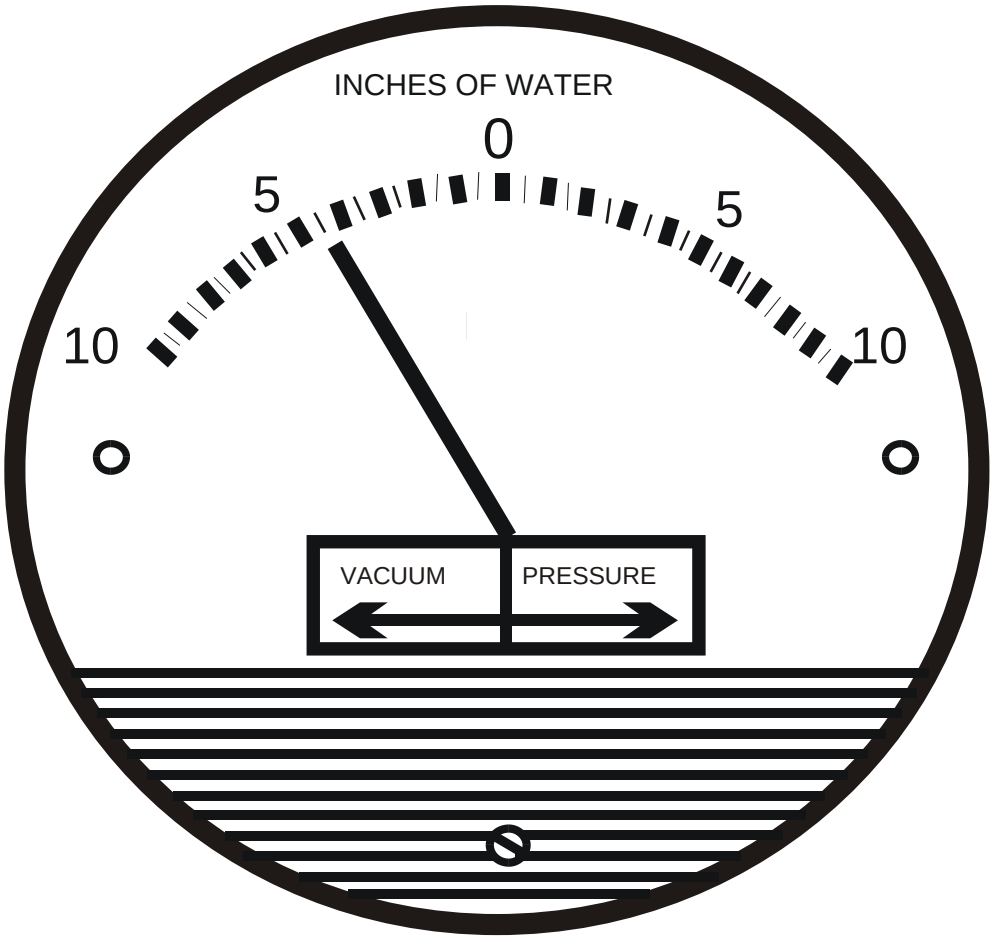

Note:Pressure/Vacuum Gage is usually installed in the dispenser house located furthest from the vent riser

Executive Order G-70-181-A
Exhibit 2
Figure 2F

Normal Trace

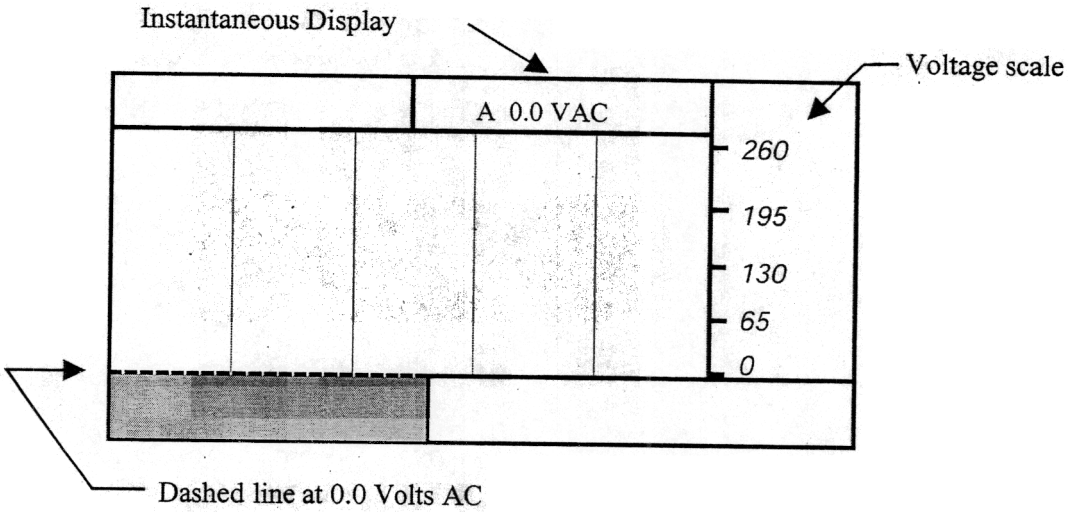

Abnormal Trace

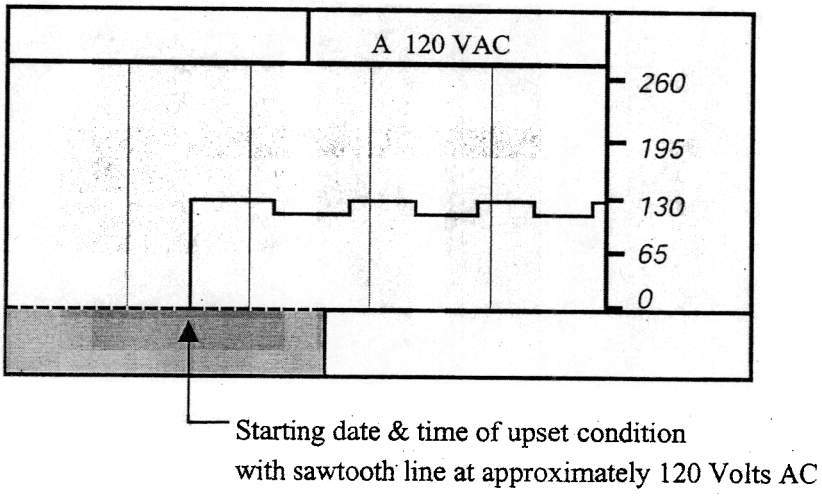

Executive Order G-70-181-A
Figure 2G
Coaxial Hose Configurations with Liquid Removal System for New and Existing Installations

Figure 2G contains diagrams of certified hose configurations for the Hirt VCS400-7 bootless nozzle system. The diagrams are generic and apply to dispensers similar to the models shown. Dispensers may have more or fewer hoses than shown.

For Remote Dispenser Configurations 1-5

1. A liquid removal system is required. The liquid pickup point shall be located at the low point of the hose loop during vehicle fueling.
2. The "hose assembly" includes all breakaways, optional swivels and other components. All hoses, including "pigtail hoses", are also specifically included in the term "hose assembly."
3. The hose may not touch the island or the ground when not in use. In the case of a dogbone island where the wider island end protects the hose from damage by vehicle tires, the hose may touch the vertical face of the island at the option of the local air pollution control district.
4. Use one inch or larger inside diameter galvanized pipe for riser except that a ¾ inch or larger inside diameter galvanized pipe may be used in dispenser configuration 5 only.
5. An ARB approved flow limiter is required for all dispensing points that have an unrestricted maximum fuel flow rate in excess of 10 gallons per minute.

Configuration 1 High discharge coaxial hose

1. The hose assembly may not exceed 11 ½ feet in length.

Configuration 2 High retractor coaxial hose

1. The hose assembly may not exceed 13 feet in length.
2. The hose retractor shall be adjusted to fully retract the hose to the top of the dispenser when not in use without excess tension.
3. The hose and retractor shall be installed so as to permit natural drainage of the hose from the retractor clamp into the dispenser when not in use.

Configuration 3 High discharge coaxial hose with retractor and hose loop

1. The hose assembly shall not exceed 14 ½ feet in length.
2. The hose retractor shall be adjusted to fully retract the hose to the top of the dispenser when not in use without excess tension.
3. The hose and retractor shall be installed so as to permit natural drainage of the hose from the retractor clamp into the dispenser when not in use.

Configuration 4 Low profile coaxial hose with retractor

1. The hose retractor shall fully retract the hose to the dispenser when not in use. The retractor clamp shall be positioned to avoid any bulge of hose between the clamp and the dispenser swivel.

Configuration 5 High retractor, low discharge coaxial hose

1. The hose retractor shall be positioned 5 to 7 feet above the island surface.

2. The hose retractor shall be adjusted to fully retract the hose to the top of the dispenser when not in use without excess tension.
3. The hose and retractor shall be installed so as to permit natural drainage of the hose from the retractor clamp into the dispenser when not in use.

For Top-Mount, End-Mount, and Adjacent Ground-Mount Dispensers

Liquid removal capability is required on low points with automatic evacuation system. A liquid removal system will not be required if gasoline within the vapor passage of the coaxial hose can be cleared through natural drainage into the vehicle. In the case of top and side mounted tank dispensers and adjacent ground-mounted dispensers located within tank bollards, natural drainage will be determined at a distance of 24 inches and a height of 30 inches from the plane of the bollards closest to the dispenser.

Executive Order G-70-181-A
Exhibit 2
Figure 2G

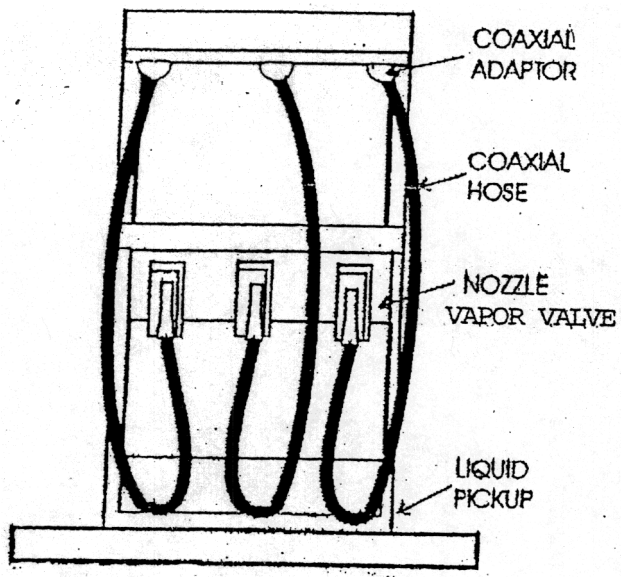

Dispenser Configuration 1

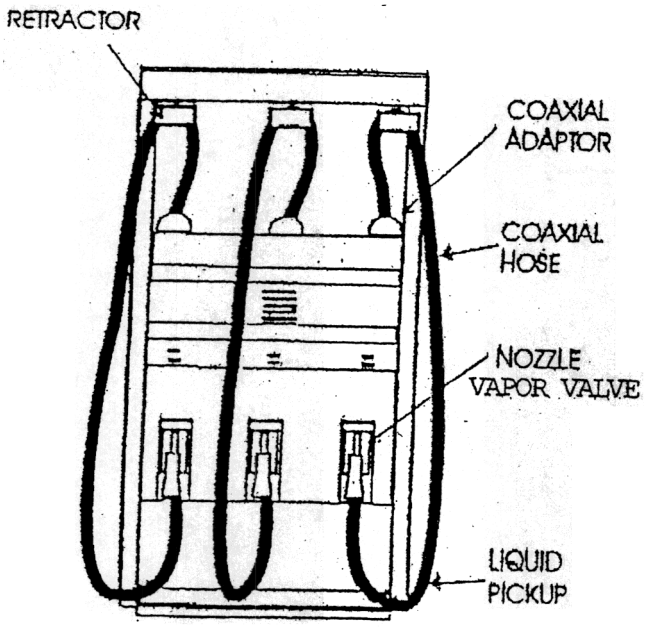

Dispenser Configuration 2

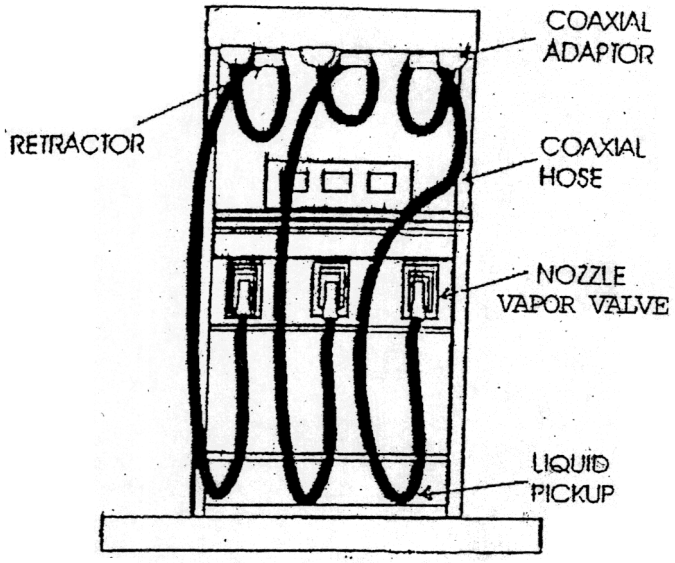

Dispenser Configuration 3

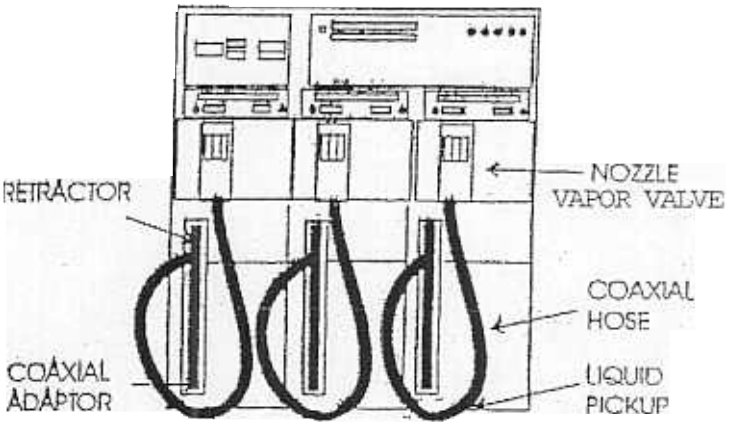

Dispenser Configuration 4

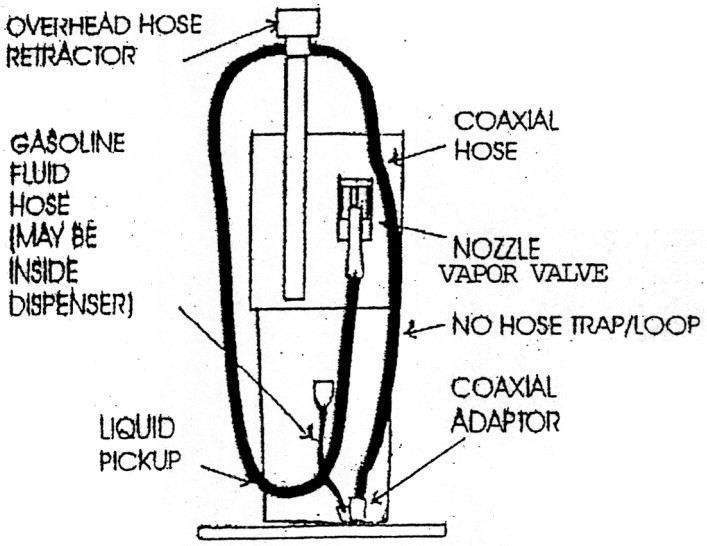

Dispenser Configuration 5

Executive Order G-70-181-A
Figure 2G (continued)

Adjacent Ground Mount Dispenser
Coaxial Hose Configuration

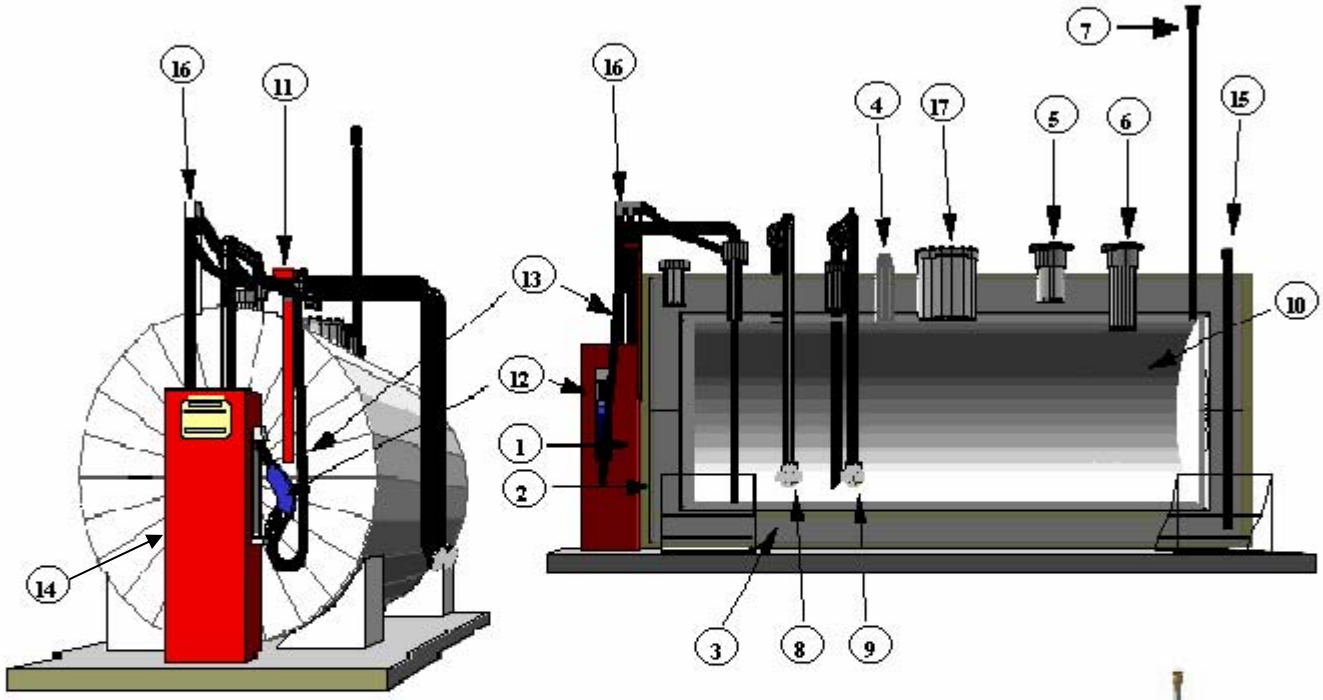

TANK LEGEND

NO.	DESCRIPTION
1	OUTER STEEL TANK
2	INNER STEEL TANK
3	CONCRETE INSULATION
4	GAUGE ACCESS
5	CONCRETE INLET PORT
6	INNER TANK EMERGENCY VENT
7	PRESSURE VACUUM (P/V) VENT
8	VAPOR ADAPTOR AND CAP
9	FILL ADAPTOR AND CAP
10	SUBMERGED FILL TUBE
11	HOSE RETRACTOR
12	NOZZLE
13	COAXIAL HOSE
14	PUMP
15	ANNULAR SPACE MONITORING TUBE
16	COAXIAL HOSE ADAPTOR
17	MANHOLE (STD. ON 5000 GAL. & LARGER

Executive Order G-70-181-A
Figure 2G (continued)

End Mount Dispenser
Coaxial Hose Configuration

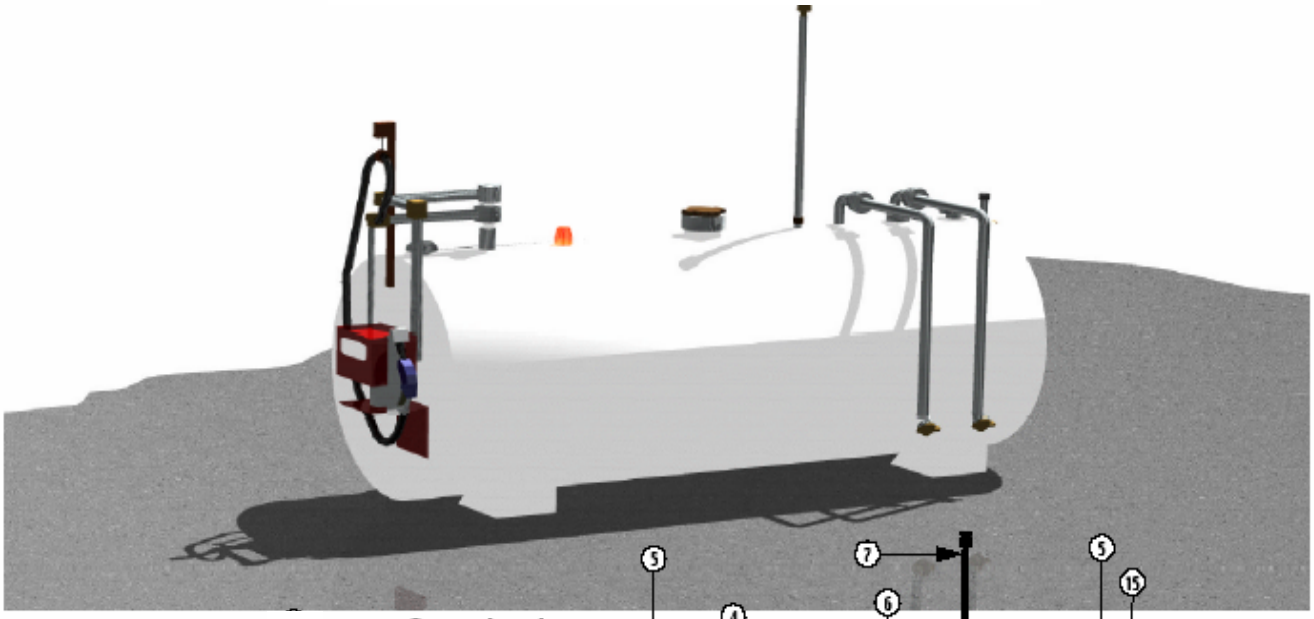

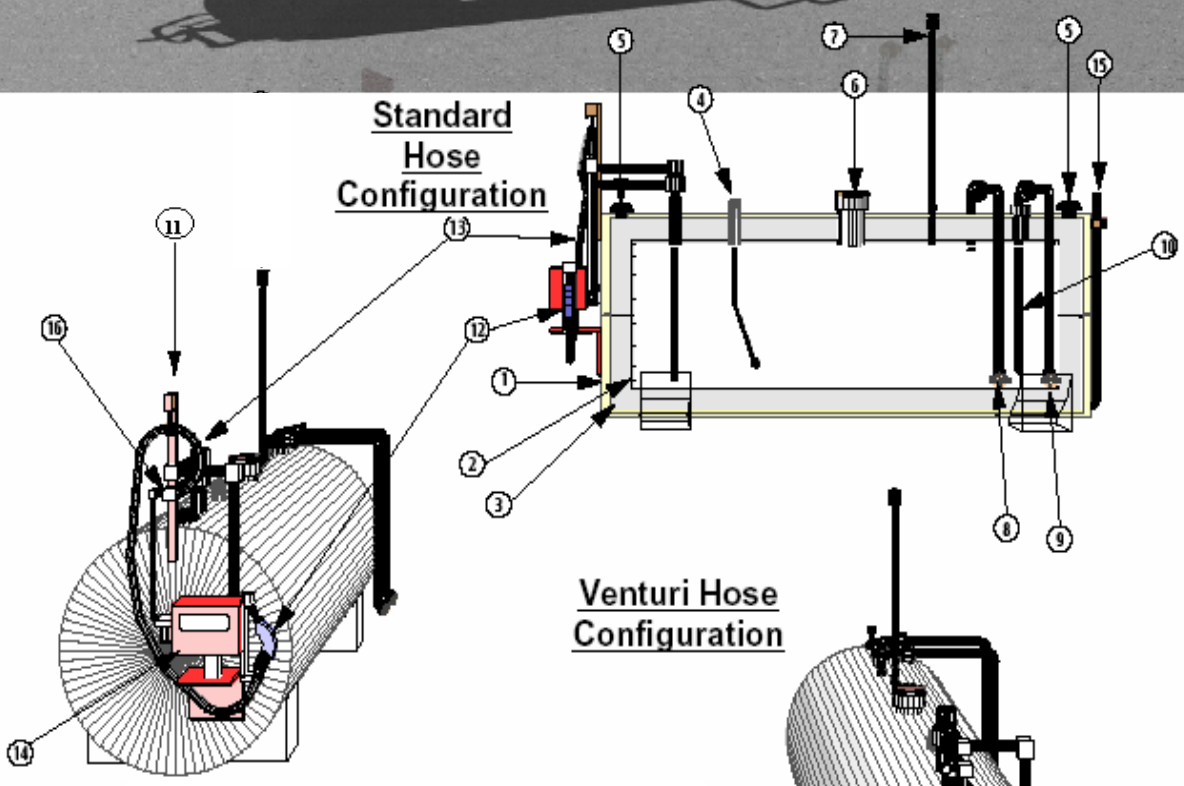

NO.	DESCRIPTION
1	OUTER STEEL TANK
2	INNER STEEL TANK
3	LIGHTWEIGHT INSULATION
4	FLOAT GAUGE
5	ANNULAR SPACE VENTS(S)
6	INNER TANK EMERGENCY VENT
7	PRESSURE VACUUM (P/V) VENT
8	VAPOR ADAPTOR AND CAP
9	FILL ADAPTOR AND CAP
10	SUBMERGED FILL TUBE
11	HOSE RETRACTOR
12	NOZZLE
13	COAXIAL HOSE
14	PUMP
15	ANNULAR SPACE MONITORING TUBE
16	COAXIAL HOSE ADAPTOR

Executive Order G-70-181-A
Figure 2G (continued)

Top Mount Dispenser
Coaxial Hose Configuration

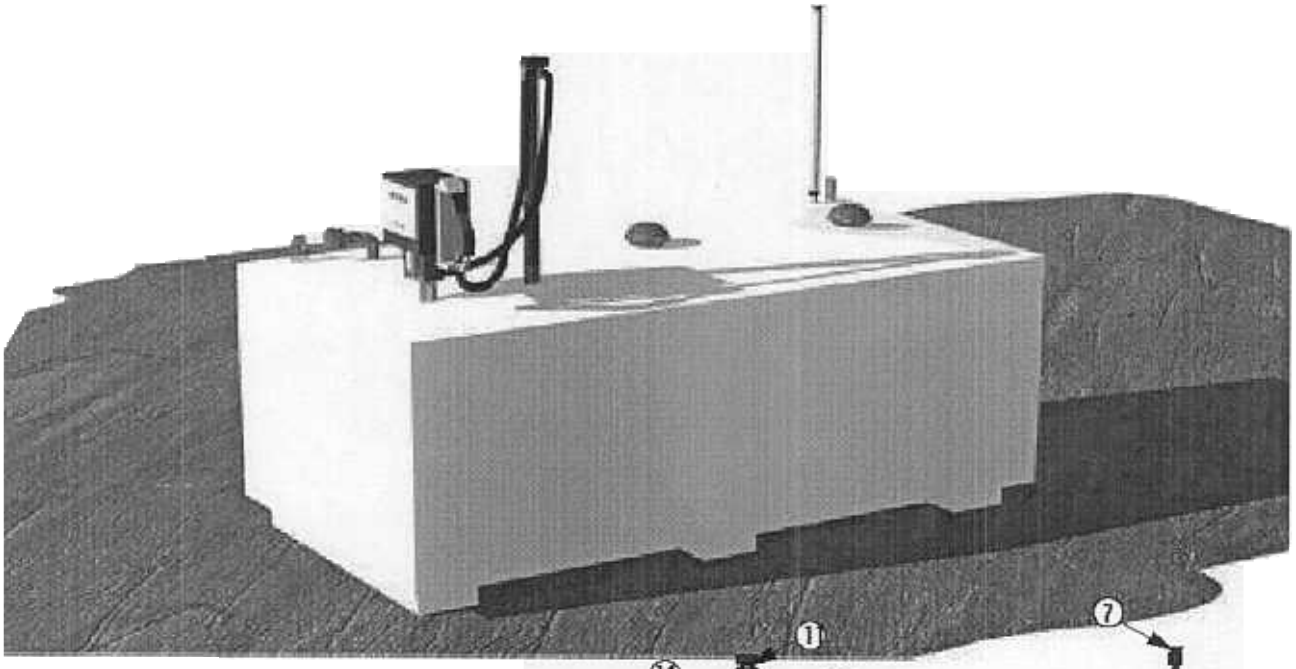

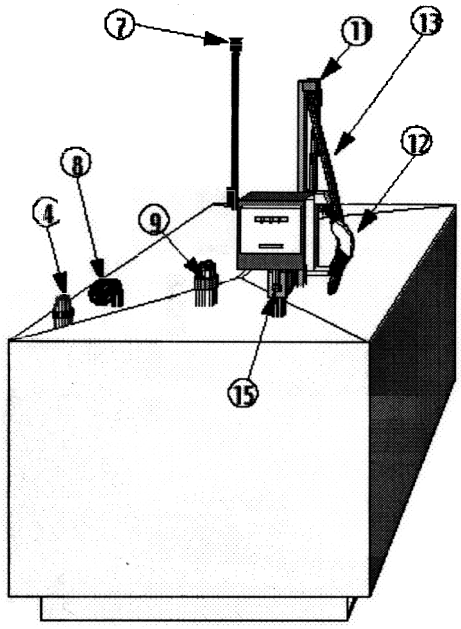

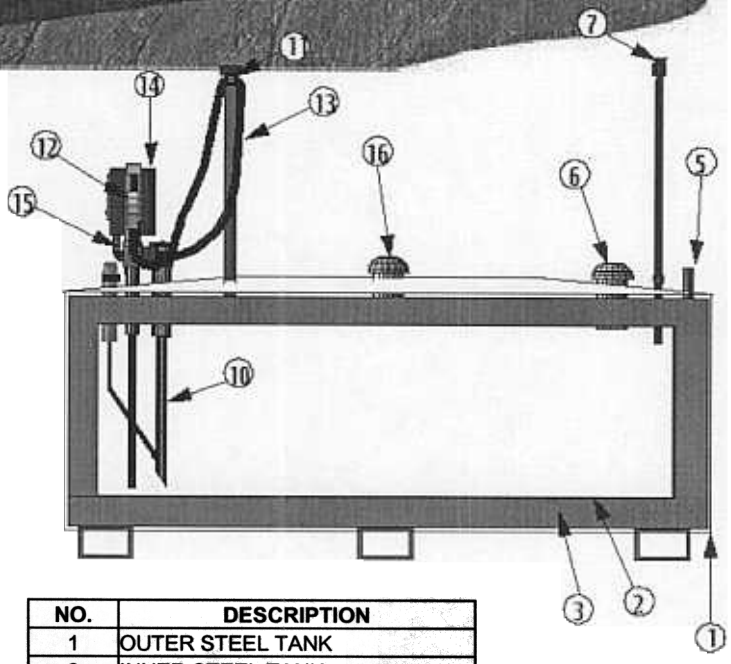

NO.	DESCRIPTION
1	OUTER STEEL TANK
2	INNER STEEL TANK
3	6" CONCRETE
4	LEVEL GAUGE
5	INTERSTITIAL MONITORING TUBE
6	TANK EMERGENCY VENT
7	PRESSURE VACUUM (P/V) VENT
8	VAPOR ADAPTOR AND CAP
9	FILL ADAPTOR AND CAP
10	SUBMERGED FILL TUBE
11	HOSE RETRACTOR
12	NOZZLE
13	COAXIAL HOSE
14	PUMP
15	COAXIAL HOSE ADAPTOR
16	OUTER TANK VENT

Executive Order G-70-181-A
Exhibit 2
Figure 2H

Proper Installation of the A/L Adaptor

Correct Installation: Note that the o-ring has isolated the shut-off port from the vapor holes

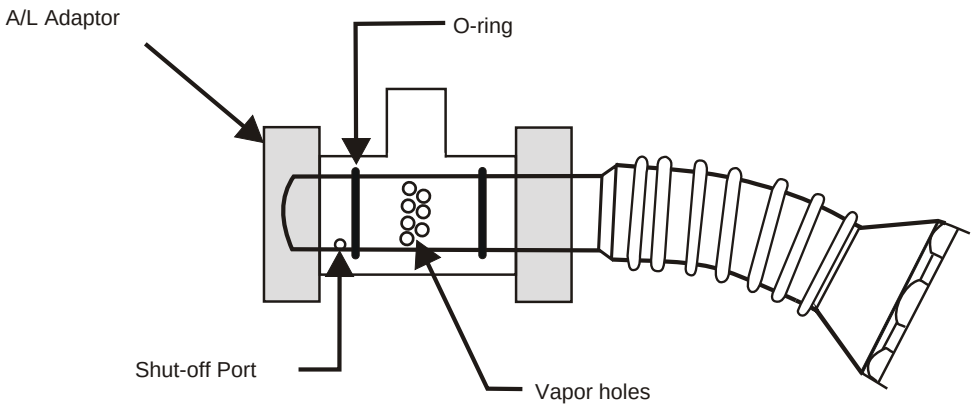

Incorrect Installation: Note that the o-ring includes the shut-off port with the vapor holes

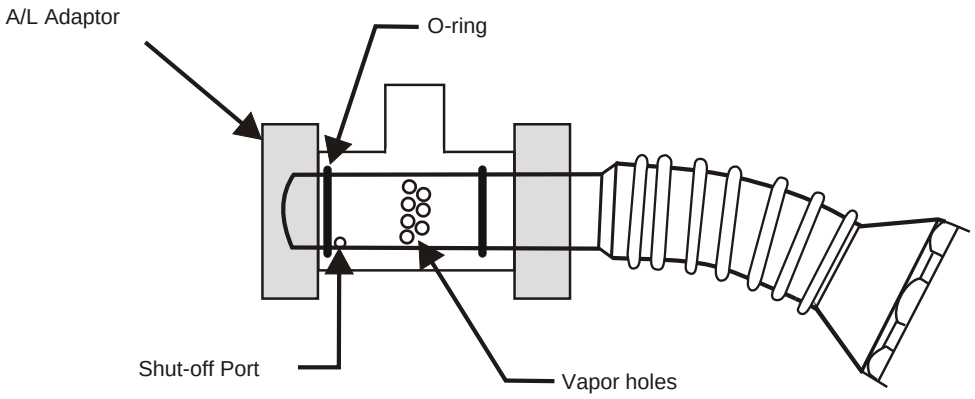

Executive Order G-70-181-A

Exhibit 3

TEN GALLON PER MINUTE LIMITATION COMPLIANCE VERIFICATION PROCEDURE

Compliance with the 10.0 gallon per minute flowrate limitation shall be determined with the following methodology. It is recommended that the maximum dispensing rate through each nozzle/hose assembly be verified.

1) The facility uses identical models of hoses, nozzles, and breakaways:

Check the nozzle closest to the submersible turbine pump (STP) for each gas grade, or STP, at the facility. With no other dispensing occurring which uses the same STP, dispense gas into a vehicle or approved container. Dispensing shall be conducted in the "hand-held, wide-open" mode. Using a stopwatch accurate to at least 0.2 seconds, begin timing the dispensing rate after at least one gallon has been dispensed. This one gallon buffer is necessary due to the "slow-start" nature of some dispensers. Determine the time required to dispense 2, 3, 4, or 5 gallons of gasoline. The facility shall be deemed in compliance with the 10.0 gallons per minute limitations if the elapsed time meets, or exceeds, the times shown in Table 1. If the dispensing rate exceeds the allowable limit, an ARB-certified flow limiting device shall be installed.

2) The facility uses different models of hoses, nozzles, or breakaways

Due to potential differences in pressure drops through the various components, each of the nozzle/hose assemblies shall be tested for maximum dispensing rates. Using the same criteria as above, determine the maximum dispensing rate through each nozzle/hose assembly. If the maximum dispensing rate exceeds the 10.0 gpm limit, an ARB-certified flow limiting device shall be installed.

Table 1
Verification of 10 gpm

Product Dispensed, gallons	Minimum Allowable Time, seconds
2.0	11.8
3.0	17.7
4.0	23.6
5.0	29.5

Note: The times have been corrected to allow for the accuracy of the measurement.

Executive Order G-70-181-A

Exhibit 4

ARB APPROVED MANUFACTURER'S MANUALS FOR THE HIRT VCS-400-7 BOOTLESS PHASE II VAPOR RECOVERY SYSTEM

MANUAL OF INSTALLATION AND STARTUP	REV. 9:03/00
MANUAL OF INITIATION AND ANNUAL INSPECTIONS	REV. 3:9/00
MANUAL OF OPERATION AND MAINTENANCE	REV. 5:03/00