State of California
AIR RESOURCES BOARD

Executive Order G-70-190

Certification of Guardian Containment, Corporation
Armor Cast Aboveground Tank Filling/Dispensing
Vapor Recovery System

WHEREAS, the California Air Resources Board ("the Board" or "CARB") has established, pursuant to California Health and Safety Code sections 39600, 39601 and 41954, certification procedures for novel systems designed for the control of Phase I and Phase II gasoline vapor emissions in its "CP-205 Certification Procedure for Vapor Recovery Systems of Novel Facilities" (the "Certification Procedures") adopted April 12, 1996 and as last amended March 17, 1999, incorporated by reference into Title 17, California Code of Regulations, Section 94015;

WHEREAS, the Board has established, pursuant to California Health and Safety Code sections 39600, 39601 and 41954, test procedures for determining the compliance of Phase I and Phase II vapor recovery systems with emission standards in its "Certification and Test Procedures for Vapor Recovery Systems", TP-205.1 and TP-205.2, respectively, ("the Test Procedures") adopted April 12, 1996 and as amended March 17, 1999, incorporated by reference into Title 17, California Code of Regulations, Section 94015;

WHEREAS, Guardian Containment, Corporation has applied for certification of its Armor Cast aboveground storage tank vapor recovery system (the “System”) for use in balance Phase I and Phase II operations;

WHEREAS, the System has been evaluated pursuant to the Certification Procedure CP-205, and the Certification Report documents successful performance of the system according to the performance standards, performance specifications and the Test Procedures;

WHEREAS, Section 7 of the Certification Procedures provides that the Executive Officer shall issue an order of certification if he or she determines that the vapor recovery system conforms to all of the requirements set forth in Section 1 through 6 of the Certification Procedures;

WHEREAS, on April 15, 1994, in Executive Order G-70-151, the Air Resources Board Executive Officer, pursuant to California Health and Safety Code sections 39515 and 39516, delegated to the Chief, Compliance Division full authority to approve and grant Executive Orders certifying integral Phase I and Phase II aboveground systems in accordance with Health and Safety Code section 41954; and

WHEREAS, I, James J. Morgester, Chief of the Compliance Division of the California Air Resources Board, have determined that the Guardian Containment, Corporation aboveground storage tank vapor recovery system, when used with ARB certified Phase I two-point balance vapor recovery components and Phase II balance vapor recovery components, conforms with all the requirements set forth in Certification Procedure CP-205;

NOW, THEREFORE, IT IS ORDERED that the System is hereby certified to meet the applicable certification performance standards.

IT IS FURTHER ORDERED that the use of Air Resources Board certified Phase I two-point balance system vapor recovery components and Phase II balance system vapor recovery components shall be a condition of the certification. Air Resources Board certified Phase I components are listed in Exhibits 1 through 3 of Executive Order G-70-97-A, Exhibits 1 and 2 of Executive Order G-70-102-A, and Exhibits 1 and 2 of Executive Order G-70-142-A. Air Resources Board certified balance system Phase II components are listed in Executive Order G-70-52-AM.

IT IS FURTHER ORDERED that any emergency vent installed on the tank be of a type with a viton seal and be vapor tight at the operating pressure of the tank when tested in accordance with ARB test procedures for determining a vapor leak as specified in the Board's Definitions for Certification Procedures and Test Procedures for Vapor Recovery Systems adopted April 12, 1996 (the Vapor Recovery Definitions D-200").

IT IS FURTHER ORDERED that the Phase I two-point balance system components and piping configuration used to connect the cargo truck bulk delivery line and the vapor line to the storage tank fill adaptor and vapor recovery adaptor shall be consistent with Air Resources Board Executive Order G-70-97 series, G-70-102 series or G-70-142 series and that remote fill and vapor recovery lines be installed whenever direct fill and vapor recovery connections would require the fuel delivery operator to climb onto the tank to make the connections. Remote connections are not required when the connections points are within reach of the operator or when a suitable access platform and stairs are provided as part of the installation. Such access shall be approved by the Division of Occupational Safety and Health of the Department of Industrial Relations (CalOSHA).

IT IS FURTHER ORDERED that the owner or operator may install a liquid level gauge on the storage tank. Any mechanical liquid level gauge shall be of a type provided with a metal casing or provided with a glass insert if of a type with a plastic gauge top. Electronic liquid level gauges shall be intrinsically sealed.

IT IS FURTHER ORDERED that in order to prevent spitback or condensate from blocking the vapor path between the vehicle fill pipe and the storage tank headspace, the routing of the coaxial hose shall be consistent with the configurations shown in Exhibits 4 through 11a in Air Resources Board Executive Order G-70-52-AM. The highest point in the vapor return path must be above the top of the storage tank and there shall be no liquid trap in the vapor path between the highest point in the vapor return path and the storage tank vapor headspace during fuel dispensing unless a liquid trap and evacuation system are included in the system. There shall be no liquid trap in the vapor path between the vehicle fill pipe and the highest point in the vapor return path during fuel dispensing unless the coaxial hose is equipped with a liquid removal system with the liquid pickup located at the liquid trap.

IT IS FURTHER ORDERED that an Air Resources Board certified P/V valve shall be installed on the tank vent and that the valve have a rated pressure relief setting of 3 ± 0.5 inches of water column gauge. The installed P/V valve shall extend to a minimum height of 12 feet above grade.

IT IS FURTHER ORDERED that the general exterior of the storage tank may be exposed aggregate with a clear epoxy coating or may be painted white or off-white (with any color base) provided the reflectivity of the paint is 75 percent or better. All exposed Phase I and Phase II piping shall painted white or off-white (with any color base) provided the reflectivity of the paint is 75 percent or better. Reflectivity shall be determined by visual comparison of the paint with paint color cards obtained from a paint manufacturer who uses the "Master Pallet Notation" to specify the paint color (e.g.

58YY *88*/180 where the number in italics is the paint reflectivity). The appropriate color card shall be available at the facility for service station type operations or at a central location for remote or unattended locations.

IT IS FURTHER ORDERED that the holding tank be enclosed within a minimum of six (6) inches of concrete, one (I) inch insulation board and two (2) inches interstitial air space for all configurations of the storage tanks as shown in Exhibits 1 and 2.

IT IS FURTHER ORDERED that the complete system shall pass a static pressure decay test at least once in each 12 month period. The test shall be conducted in accordance with the Boards "Determination of Static Pressure Performance of Vapor Recovery Systems of Dispensing Facilities with Above-Ground Storage Tanks" adopted April 12, 1996 ("Vapor Recovery Test Procedure TP-201.3B"). The test results shall be reported in a format specified by the local district.

IT IS FURTHER ORDERED that the tank sizes approved by this order shall be from 500 gallons to 12,000 gallons for total capacity of single and split product tanks for gasoline only and total gasoline compartment capacity of split product tanks for gasoline and non-gasoline products.

IT IS FURTHER ORDERED that the installation of the tank and associated piping and other equipment not specifically listed as certified Phase I equipment in CARB executive orders shall comply with the requirements of local fire officials with jurisdiction where the system is installed.

IT IS FURTHER ORDERED that compliance with the rules and regulations of the local air pollution control district with jurisdiction over the location where the system is installed shall be made a condition of this certification.

IT IS FURTHER ORDERED that compliance with all applicable certification requirements and rules and regulations of the Division of Measurement Standards of the Department of Food and Agriculture, the State Fire Marshal, and the Division of Occupational Safety and Health of the Department of Industrial Relations shall be made a condition of this certification.

IT IS FURTHER ORDERED that any alteration of the equipment, parts, design, or operation of the systems certified hereby is prohibited unless such alteration has been approved by the Executive Officer or his or her designee. Any unapproved alteration shall void the certification for the specific installation where such alteration occurred.

Executed at Sacramento, California this 8 th day of October 1999.

/Signed/
James J. Morgester, Chief
Compliance Division

Exhibit 1
Executive Order G-70-190

Guardian Containment Corporation "Armor Cast"
Aboveground Tank Fueling/Dispensing Vapor Recovery System

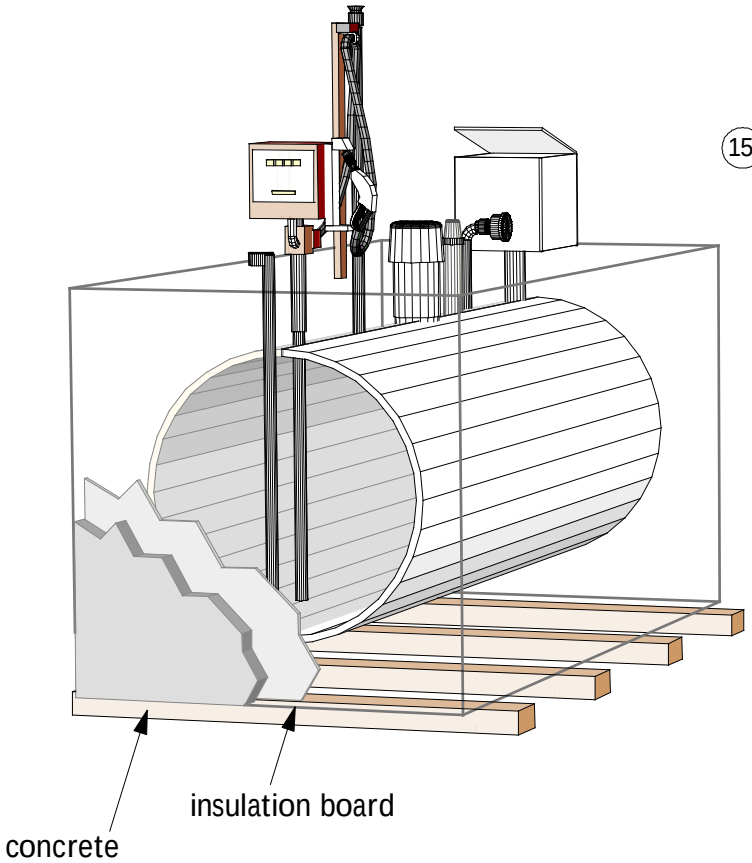

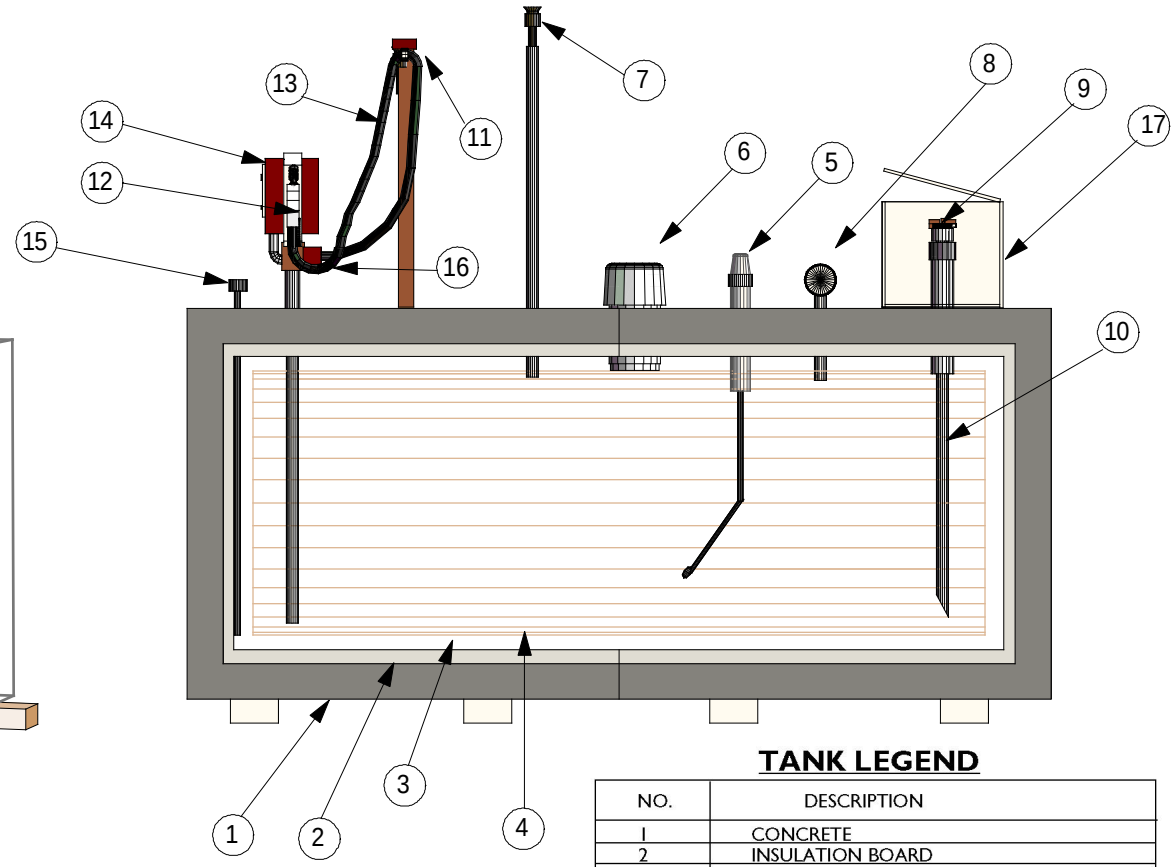

TANK LEGEND

NO.	DESCRIPTION
1	CONCRETE
2	INSULATION BOARD
3	AIR SPACE
4	HOLDING TANK
5	GAUGE ACCESS
6	EMERGENCY VENT
7	PRESSURE VACUUM (P/V) VENT
8	VAPOR ADAPTOR AND CAP
9	FILL ADAPTOR AND CAP
10	SUBMERGED FILL TUBE
11	HOSE RETRACTOR
12	NOZZLE
13	COAXIAL HOSE
14	PUMP
15	INTERSTITIAL AIR SPACE MONITORING TUBE
16	COAXIAL HOSE ADAPTOR
17	SPILL CONTAINMENT BOX

Notes:

The holding tank shall be enclosed within a minimum of six (6) inches of concrete, one (1) inch of insulation board and two (2) inches of interstitial air space.

The tank vent shall extend to a minimum height of 12 feet above grade.

Exhibit 2
Executive Order G-70-190

Guardian Containment Corporation "Armor Cast"
Aboveground Tank Fueling/Dispensing Vapor Recovery System

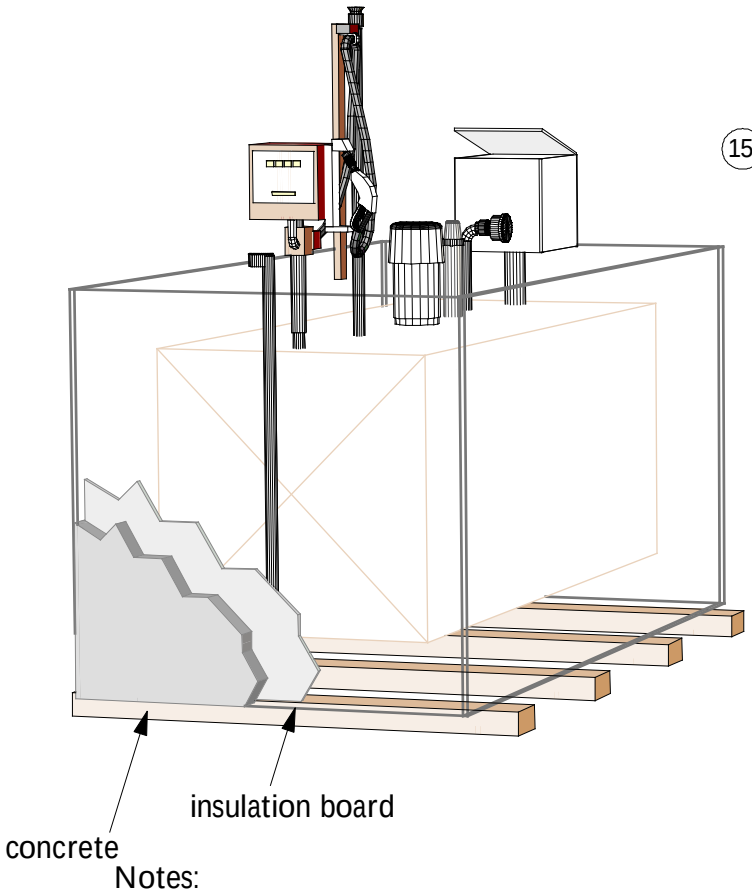

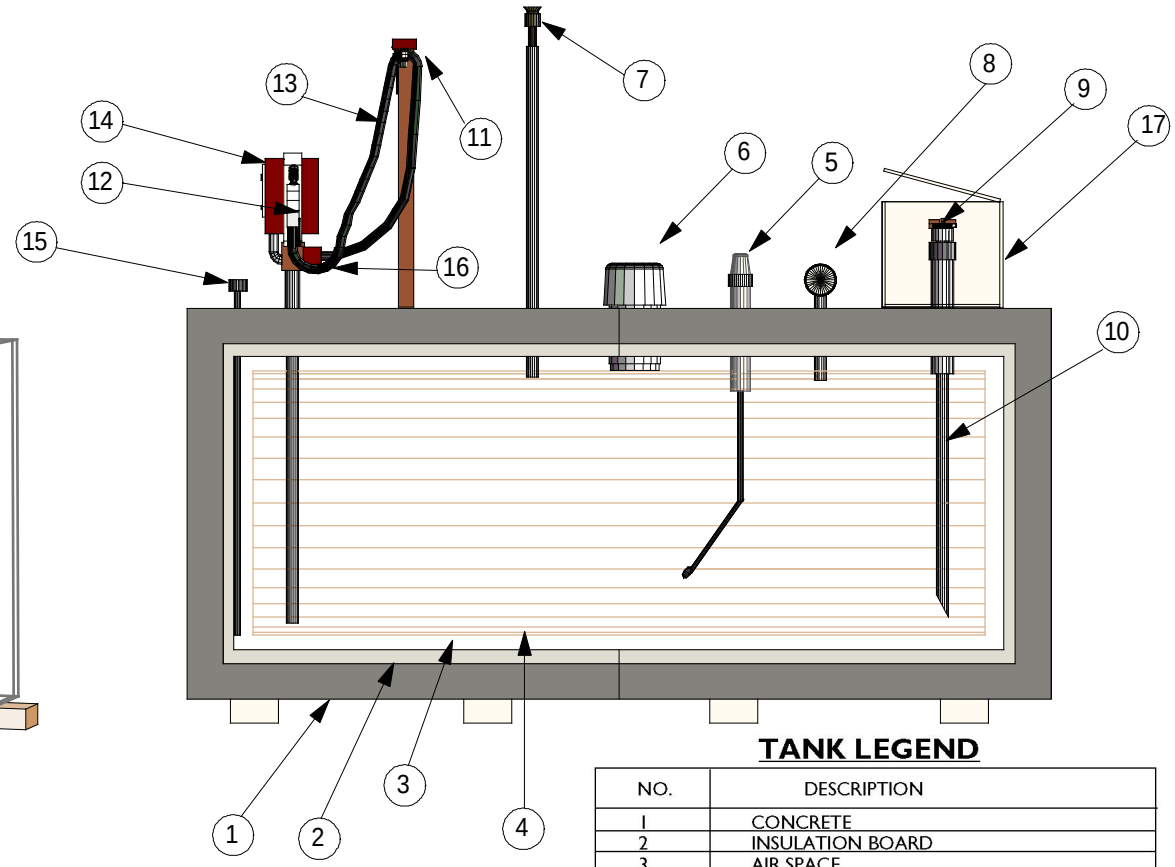

TANK LEGEND

NO.	DESCRIPTION
1	CONCRETE
2	INSULATION BOARD
3	AIR SPACE
4	HOLDING TANK
5	GAUGE ACCESS
6	EMERGENCY VENT
7	PRESSURE VACUUM (P/V) VENT
8	VAPOR ADAPTOR AND CAP
9	FILL ADAPTOR AND CAP
10	SUBMERGED FILL TUBE
11	HOSE RETRACTOR
12	NOZZLE
13	COAXIAL HOSE
14	PUMP
15	INTERSTITIAL AIR SPACE MONITORING TUBE
16	COAXIAL HOSE ADAPTOR
17	SPILL CONTAINMENT BOX

Notes:

The holding tank shall be enclosed within a minimum of six (6) inches of concrete, one (1) inch of insulation board and two (2) inches of interstitial air space.

The tank vent shall extend to a minimum height of 12 feet above grade.