# Executive Order G-70-150-AD

# Exhibit 2

# Figure 2B-1
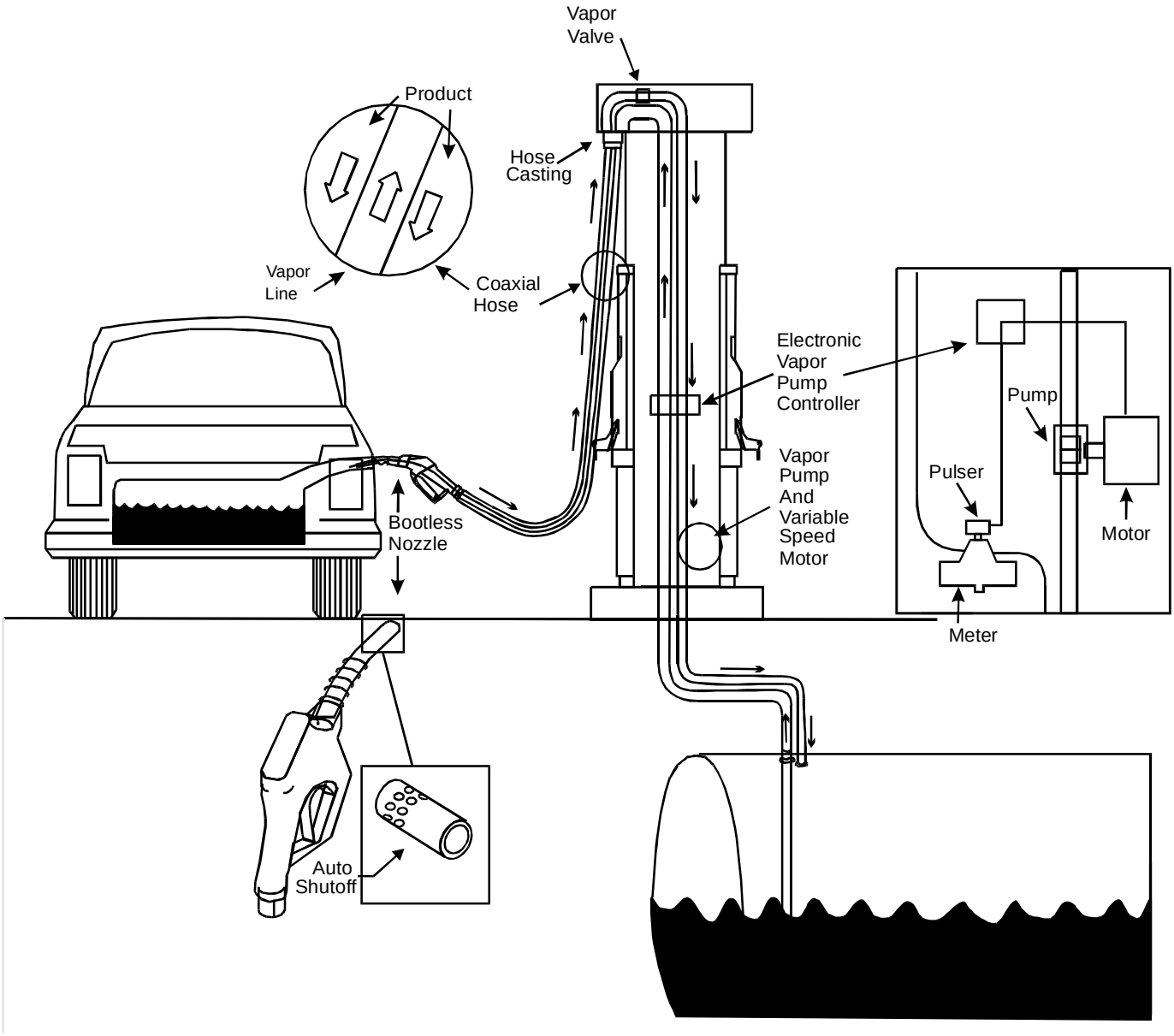
Component Parts of the VaporVac System