Executive Order G-70-150-AE

Exhibit 2

Figure 2C-1

Installation of the A/L Adaptor

Exclude Shut-off Port: Note that the o-ring has isolated the shut-off port from the vapor holes

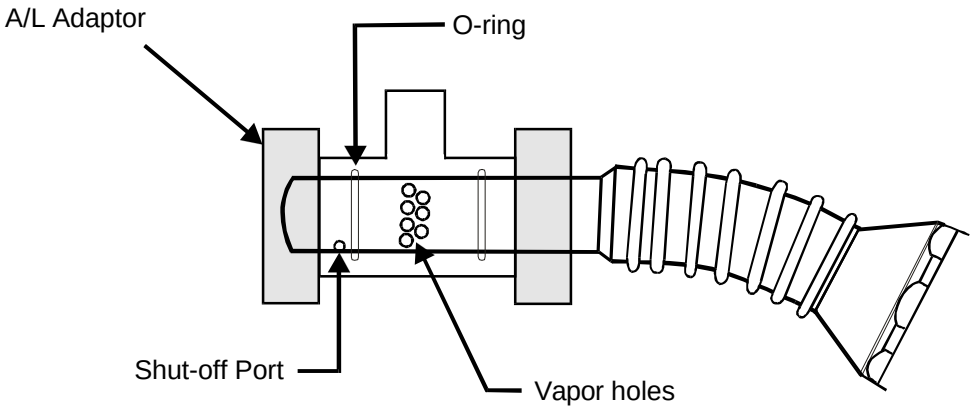
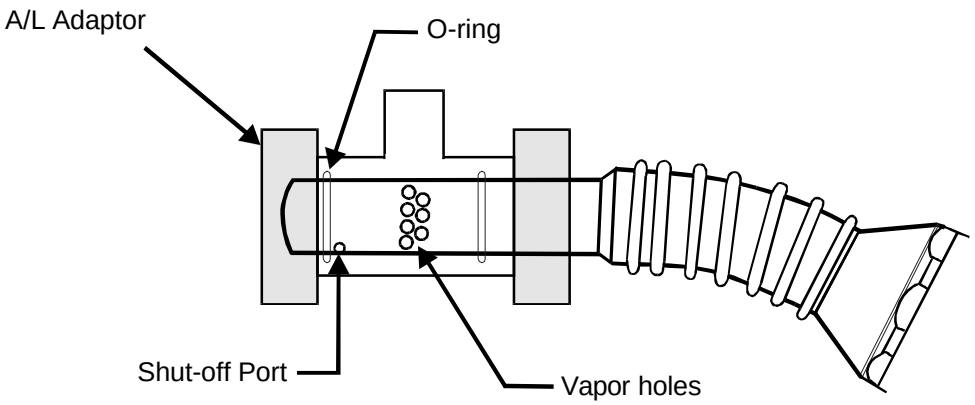
Include Shut-off Port: Note that the o-ring includes the shut-off port with the vapor holes