State of California
AIR RESOURCES BOARD

Executive Order G-70-150-AE
Modification to the Certification of the Marconi Commerce Systems Inc. (MCS) “Formerly Gilbarco” VaporVac Phase II Vapor Recovery System

WHEREAS, the California Air Resources Board ("the Board" or "CARB") has established, pursuant to California Health and Safety Code sections 39600, 39601 and 41954, certification procedures for systems designed for the control of gasoline vapor emissions during motor vehicle fueling operations (Phase II vapor recovery systems) in its "Certification and Test Procedures for Vapor Recovery Systems" (the "Certification Procedures") as last amended April 28, 2000, incorporated by reference in Title 17, California Code of Regulations, Section 94011;

WHEREAS, the Board has established, pursuant to California Health and Safety Code sections 39600, 39601 and 41954, test procedures for determining the compliance of Phase II vapor recovery systems with emission standards in its "Certification and Test Procedures for Vapor Recovery Systems" CP-201 (the "Test Procedures") as adopted April 12, 1996, and as last amended April 28, 2000, incorporated by reference in Title 17, California Code of Regulations, Section 94011;

WHEREAS, Marconi Commerce Systems Inc. (MCS), formerly Gilbarco Incorporated, requested and was granted certification of the VaporVac Phase II vapor recovery system ("VaporVac system") pursuant to the Certification Procedures and Test Procedures on March 26, 1993, by Executive Order G-70-150, and was granted modifications to the certification by Executive Orders G-70-150-AA, issued August 31, 1993, and G-70-150-AB, issued February 7, 1994, G-70-150-AC, issued February 26, 1996 and G-70-150-AD, issued August 1, 1996;

WHEREAS, MCS requested a modification to the certification to include the Encore and the Eclipse series dispensers and;

WHEREAS, the Air Resources Board deemed it necessary to modify the certification to include nozzles with miniboots and Air to Liquid (A/L) ratios associated with these nozzle types to be lowered from the existing 1.10 ± 0.10 to 1.0 ± 0.10;

WHEREAS, the requested modifications to the certification of the VaporVac system has been evaluated pursuant the Board's Certification Procedures using the Husky V34 6250, the Emco Wheaton A4505 and the OPW 12VW nozzles with miniboots;

WHEREAS, the Catlow ICVN nozzle with the miniboot was previously certified by G-70-188 to be used with the VaporVac system and conforms with the requirements for certification when used as specified in Exhibits 1 and 2;

WHEREAS, the Certification Procedure (CP-201) provides that the Executive Officer shall issue an order of certification if he or she determines that the vapor recovery system conforms to all of the applicable requirements set forth in the Certification Procedures; and

WHEREAS, I, Michael P. Kenny, Air Resources Board Executive Officer, find that the VaporVac system conforms with all the requirements set forth in the Certification Procedures, and results in a vapor recovery system which is at least 95 percent effective for attendant and/or self-serve use at gasoline service stations when used in conjunction with a Phase I vapor recovery system which has been certified by the Board.

NOW, THEREFORE, IT IS HEREBY ORDERED that the VaporVac system is certified to be at least 95 percent effective in attended and/or self-serve mode when used with a CARB-certified Phase I vapor recovery system as specified in Exhibit 2 of this Order. **Fugitive emissions which may occur when the underground storage tanks are under positive pressure have not been quantified and were not included in the calculation of system effectiveness. Compatibility of this system with the onboard refueling vapor recovery systems has not been evaluated.** Exhibit 1 contains a list of the equipment certified for use with the VaporVac system. Exhibit 2 contains installation and performance specifications for the equipment listed in Exhibit 1. Exhibit 3 contains a static decay test procedure.

IT IS FURTHER ORDERED **that all new MCS VaporVac systems installed after August 1, 2000, shall use nozzles that incorporate vapor check valves and "mini-boots" and the A/L range for all new systems installed after August 1, 2000, shall be 1.0 ± 0.1.**

IT IS FURTHER ORDERED that the dispensing rate for VaporVac systems shall not exceed ten gallons per minute (10.0 gpm) at any time. This is consistent with the flowrate limitation imposed by United States Environmental Protection Agency as specified in the Federal Register, Volume 58, Number 55, page 16019. Exhibit 4 contains a procedure for verifying dispensing rate.

IT IS FURTHER ORDERED that compliance with the certification requirements and rules and regulations of the Division of Measurement Standards of the Department of Food and Agriculture, the State Fire Marshal's Office, and the Division of Occupational Safety and Health of the Department of Industrial Relations is made a condition of this certification.

IT IS FURTHER ORDERED that the following requirements are made a condition of certification. The VaporVac system shall be installed only in facilities which are capable of demonstrating on-going compliance with the vapor integrity requirements contained in Exhibit 3 of this Order. The owner or operator of the installation shall conduct, and pass, a Static Pressure Decay test as specified in Exhibit 3, no later than 60 days after startup and at least once in each twelve month period. The owner or operator of the installation shall conduct, and pass, an Air-to-Liquid Ratio test as specified in TP-201.5 no later than 60 days after startup and at least once in each twelve month period thereafter. The test results shall be made available to the local air pollution control or air quality management district upon request within fifteen calendar days after the tests are conducted, or within fifteen calendar days of the request. These results should be submitted in a district approved format. Alternative test procedures may be used if determined by the Executive Officer, in writing, to yield comparable results.

IT IS FURTHER ORDERED that the system, as installed, shall comply with the procedures and performance standards, which the test installation was required to meet during certification testing. Local districts may adopt stricter procedures or performance standards in accordance with the California Health and Safety Code section 41954 (g). Failure to demonstrate compliance with procedures or performance standards which are stricter than those imposed during certification testing does not, per se, constitute failure of the VaporVac system to meet the terms and conditions of this Executive Order. If, in the judgment of the Executive Officer, a significant fraction of installations fail to meet the specifications of this certification, or if a significant portion of the vehicle population is found to have configurations which significantly impair the system's collection efficiency, the certification itself may be subject to modification, suspension or revocation.

IT IS FURTHER ORDERED that all nozzles approved for use with the VaporVac system shall be 100 percent performance checked at the factory including checks of the integrity of the vapor path, as specified in Exhibit 2 of this Order, and proper functioning of all automatic shut-off mechanisms.

IT IS FURTHER ORDERED that each vapor pump and the electronic circuitry with which it is to operate shall be matched and 100 percent performance checked at the factory, including verification that the vapor recovery system performance is within the range specified in Exhibit 2 of this Order. Vapor pumps and electronic components sold separately as replacement parts shall be tested after field installation to verify that the combination results in vapor recovery system performance within the range specified in Exhibit 2 of this Order.

IT IS FURTHER ORDERED that the certified VaporVac system shall be performance tested during installation for ability to dispense gasoline and collect vapors without difficulty in the presence of the station operator, owner or designee. The station operator, owner or designee shall be provided with CARB approved copies of the installation and maintenance manuals for the VaporVac system, to be maintained at the station, and shall also be provided with CARB approved instructions in the proper use of the VaporVac system, its repair and maintenance, and where system replacement and system components can be readily obtained.

IT IS FURTHER ORDERED that the certified VaporVac system shall be warranted in writing, for at least one year from the startup date of the original installation, to the ultimate purchaser and each subsequent purchaser within the warranty period, that the vapor recovery system is designed, built and equipped so as to conform at the time of original installation or sale with the applicable regulations and is free from defects in materials and workmanship which would cause the vapor recovery system to fail to conform with applicable regulations. Copies of the manufacturer's warranty for the VaporVac system shall be made available to the station manager, owner or operator.

IT IS FURTHER ORDERED that the certified VaporVac system shall, at a minimum, be operated in accordance with the manufacturer's recommended maintenance intervals and shall use the manufacturer's recommended operation, installation, and maintenance procedures.

IT IS FURTHER ORDERED that any alteration of the equipment, parts, design, or operation of the systems certified hereby is prohibited, and deemed inconsistent with this certification, unless such alteration has been approved by the Executive Officer or his/her designee.

IT IS FURTHER ORDERED that, upon the adoption of revised standards, an installed VaporVac system may continue to be used as provided in Certification Procedure CP-201, pursuant to California Health and Safety Code section 41956.1, which provides that whenever the Board revises performance or certification standards, any system or any system components certified under procedures in effect prior to the adoption of revised standards and installed prior to the effective date of the revised standards may continue to be used in gasoline marketing operations for a period of four years after the effective date of the revised standards, provided that all necessary repair and replacement parts or components shall be certified;

IT IS FURTHER ORDERED that the VaporVac system certification, Executive Order G-70-150-AD, issued August 1, 1996, is hereby superseded by this Executive Order.

Executed at Sacramento, California, this ____12th____ day of ___July___, 2000.

Michael P. Kenny
Signed Copy on File
Executive Officer

Attachments

Executive Order G-70-150-AE

Exhibit 1

MCS VaporVac System Equipment List

Component	Manufacturer/Model	State Fire Marshal Identification Number
Nozzles Without Vapor Check Valves A/L Ratio of 1.1 +/- 0.1		
	Emco Wheaton A4500-xx (Figure 1A-1) xx = 051 (15/16" OD spout, hold open latch (HOL)) 052 (13/16" OD spout, HOL) 053 (15/16" OD spout, no HOL) 054 (13/16" OD spout, no HOL)	005:007:042
	Husky V3 6201xxx (Figure 1A-2) without vapor valve xxx= 049 (unleaded spout, HOL) xxx= 089 (unleaded spout, no HOL)	005:021:011
	OPW 11VAI-xx (Figure 1A-3) without vapor valve xx = 22 (15/16" OD spout, hold open latch (HOL)) 27 (13/16" OD spout, HOL) 42 (15/16" OD spout, no HOL) 47 (13/16" OD spout, no HOL)	005:008:050
Fuel Splash Guards	Fuel splash guards are optional but, if used, must be the guards listed for use with the nozzle. Local districts may require splash guards. See Figure 1A or 1B or 1C for their location on the nozzle.	
Nozzles With Vapor Check Valves A/L Range of 1.0 +/- 0.1		
	Catlow ICVN (with vapor valve and ECD) (Figure 1B-1)	005:030:014
	Emco Wheaton A4505 (with vapor valve and Vapor Guard) (Figure 1B-2)	005:007:042
	Husky V34 Model 6250 (with vapor valve and (VSG)) (Figure 1B-3)	005:021:008
	OPW 12VW (with vapor valve and VEG) (Figure 1B-4)	005:008:059
Fuel Splash Guards	Fuel splash guards are optional but, if used, must be the guards listed by the manufacturer for use with the nozzle. Splash guards shall be installed so they do not interfere with the operation of the VEG or VSG units.	

Component	Manufacturer / Model	State Fire Marshal Identification Number
Inverted Coaxial Hoses		
	Catlow Vapor Mate	005:033:005
	Dayco 7282 Superflex 2000	005:033:005
	Dayco 7292 Superflex 4000	005:033:006
	Dayco 7246 Flex-Ever Ultimate	005:033:007
	Dayco 7253BVD Flex-Ever Ultimate	005:033:008
	Goodyear Flexsteel	005:036:002
	GT Sales/Hewitt Superflex 2000	005:033:005
	Thermoid Hi-Vac	005:037:003
	Thermoid Hi-Vac S	005:037:004
	VST VSTaflex	005:052:001
	VST VST-CIS	005:052:001
	OR Any inverted coaxial hose which is CARB-certified for use with the MCS VaporVac system	
Breakaway Couplings	**With A Vapor Poppet**	
	Catlow AV2001 (reconnectable)	005:030:006
	Catlow AVR200S (reconnectable)	005:030:010
	Catlow IVC200S	005:030:017
	Emco Wheaton A5219-001 (reconnectable)	005:030:010
	Husky 4034 (reconnectable)	005:021:009
	Husky 5134 (reconnectable w/tool)	005:021:009
	OPW 66CIP (reconnectable)	005:030:010
	OPW 66CAS	005:008:056
	Richards VA-50 (reconnectable)	005:031:007
	Richards VA-50B (reconnectable)	005:031:014
	Richards VA-60 (OPW 66ISU-5100)	005:031:009
	VST-IS-SBK	005:044:008
	VST-H-SBK	005:044:008
	OR Any inverted coaxial breakaway with a vapor valve which is CARB-certified for use with the MCS VaporVac system.	
Breakaway Couplings	**Without A Vapor Poppet**	
	Catlow AV200	005:030:005
	Catlow AV200-1	005:030:005
	Emco Wheaton A5019-001	005:030:005
	OPW 66CI	005:030:005
	Richards VA-51 (reconnectable)	005:031:007
	Richards VA-61 (OPW 66ISU-5200)	005:031:009
	OR Any inverted coaxial breakaway which is CARB-certified for use with the VaporVac system.	

Component	Manufacturer / Model	State Fire Marshal Identification Number
Breakaway/Hose Combinations		
	VST-IS-BK (Breakaway includes a vapor poppet.)	005:044:004
	OR Any inverted coaxial breakaway/hose combination with a vapor valve which is CARB-certified for use with the MCS VaporVac system.	
Swivels		
	OPW 43-IS	005:008:057
	Richards MFVA	005:031:015
	Husky 4605	005:021:016
	Catlow IC3	005:030:018
	OR Any inverted coaxial swivel which is CARB-certified for use with the MCS VaporVac system.	
Breakaway/Swivel Combinations		
	Richards STVA (OPW 66ISB-5100) (Breakaway includes a vapor poppet.)	005:031:016
	OR Any inverted coaxial breakaway/swivel combination with a vapor valve which is CARB-certified for use with the MCS VaporVac system.	
Flow Control Units		
	Catlow I10G-1A	005:030:013
	Healy 1301M	005:027:020
	Healy 1302M	005:027:020
	Husky 5837	005:021:012
	OPW 66FL	005:008:054
	OPW 66FD	005:008:054
	Richards FRVAD	005:031:017
	Vapor Systems Technologies (VST)	005:044:001
	OR Any inverted coaxial flow control unit which is CARB-certified for use with the MCS VaporVac system.	
Breakaway/Flow Control Unit Combinations		
	OPW 66FLB (Breakaway includes a vapor poppet.)	005:008:055
	OR Any inverted coaxial breakaway/flow control unit combination with a vapor valve which is CARB-certified for use with the MCS VaporVac system.	

Component	Manufacturer / Model	State Fire Marshal Identification Number
Pressure/Vacuum Valves (settings as specified below)		
	OPW 523LP, 523LPS	005:008:051
	Hazlett H-PVB-1 Gold label	005:017:004
	Morrison Brothers 749CRB0600 AV	005:041:001
	Husky 4620	005:021:015
	OPW 523V	005:008:058
	EBW 802-308, 802-309	005:034:006
	OR	
	Any CARB-certified valve with the following pressure and vacuum settings, in inches water column (wc): Pressure: three plus or minus one-half inches (3.0 ± 0.5") water column. Vacuum: eight plus or minus two inches (8 ± 2") water column.	
Vapor Pump	Blackmer VGR 3/4	
Dispensers	MCS (Gilbarco) Advantage Series B"XY" Figure 1C-1 ("X" may be 0, 2, 4, 6, 7 ,8, F ,H J, L, N, Q) ("Y" may be 0 through 9, A through P)	GVRC.001:026:015
	MCS (Gilbarco) Encore Series Figure 1C-2	GVRC.001: 026:017
	Model #'s	Description:
	NAO	Encore 1 Grade Multi-hose
	NA1	Encore 2 Grade Multi-hose
	NA2	Encore 3 Grade Multi-hose
	NA3	Encore 4 Grade Multi-hose
	NG0	Encore 3 Grade Single-Hose
	NG1	Encore 4 Grade Single-Hose plus 1
	NJ0	Multi-hose Blender
	NJ2	Multi-hose Blender plus 1
	NL0 NL1 NL2 NL3	Encore X+1 Blender
	NN0 NN1 NN2 NN3	Encore X+0 Blender
	MCS (Gilbarco) Eclipse Series Figure 1C-2	GVRC.001: 026:018
	Model #'s	Description:
	EG0	Eclipse Single-hose
	EL0 EL1 EL2 EL3	Eclipse X+1 Blender
	EN0 EN1 EN2 EN 3	Eclipse X+0 Blender

Component	Manufacturer / Model	State Fire Marshal Identification Number
	Schlumberger 4000 Series 4"ABC"-"YZ"-"S"-VG ("A" may be 1 through 4 and designates the number of products on the front side "B" may be 0 through 4 and designates the number of products on the back side "C" may be 0 through 3 and designates the number of hoses per side "Y" may be 2 through 7 and designates computer options "Z" may be A; D; or none and designates computer options "S" may be B; L; R; -B-L; -B-R; -L-R; -B-L-R; or no characters and designates optional features VG designates the MCS VaporVac system)	
VaporVac Retrofit Assemblies (for the Advantage Series and MPD-1, 2/C, and 3)	CV00"XY"-"ZZ" ("X" may be 0 through 3 "Y" may be 0 through 9 "Z" may be 0 through 9 and designates cosmetic features such as color)	
Phase I Product Adaptors	Bravo B-70 B Swivel OPW 61SA-1000 Rotatable OPW 633LC Lock Clamp CNI Locking Clamp, Part # 613BC OR Any CARB-certified device which prevents loosening or overtightening of the Phase I product adaptor. ***(Note: Adaptors which can <u>not</u> be prevented from loosening or overtightening may only be used until December 31, 2003.)***	
Phase I Vapor Adaptors	CNI Locking Clamp, Part # 611DB4AC Bravo Swivel Vapor Adapter, B-75 OPW 633LC Lock Clamp Any CARB-certified device which prevents loosening or overtightening of the Phase I vapor adaptor ***(Note: Adaptors which can <u>not</u> be prevented from loosening or overtightening may only be used until July 1, 2004.)***	

Executive Order G-70-150-AE

Exhibit 1

Figure 1A-1

Emco Wheaton Model A4500 Nozzle

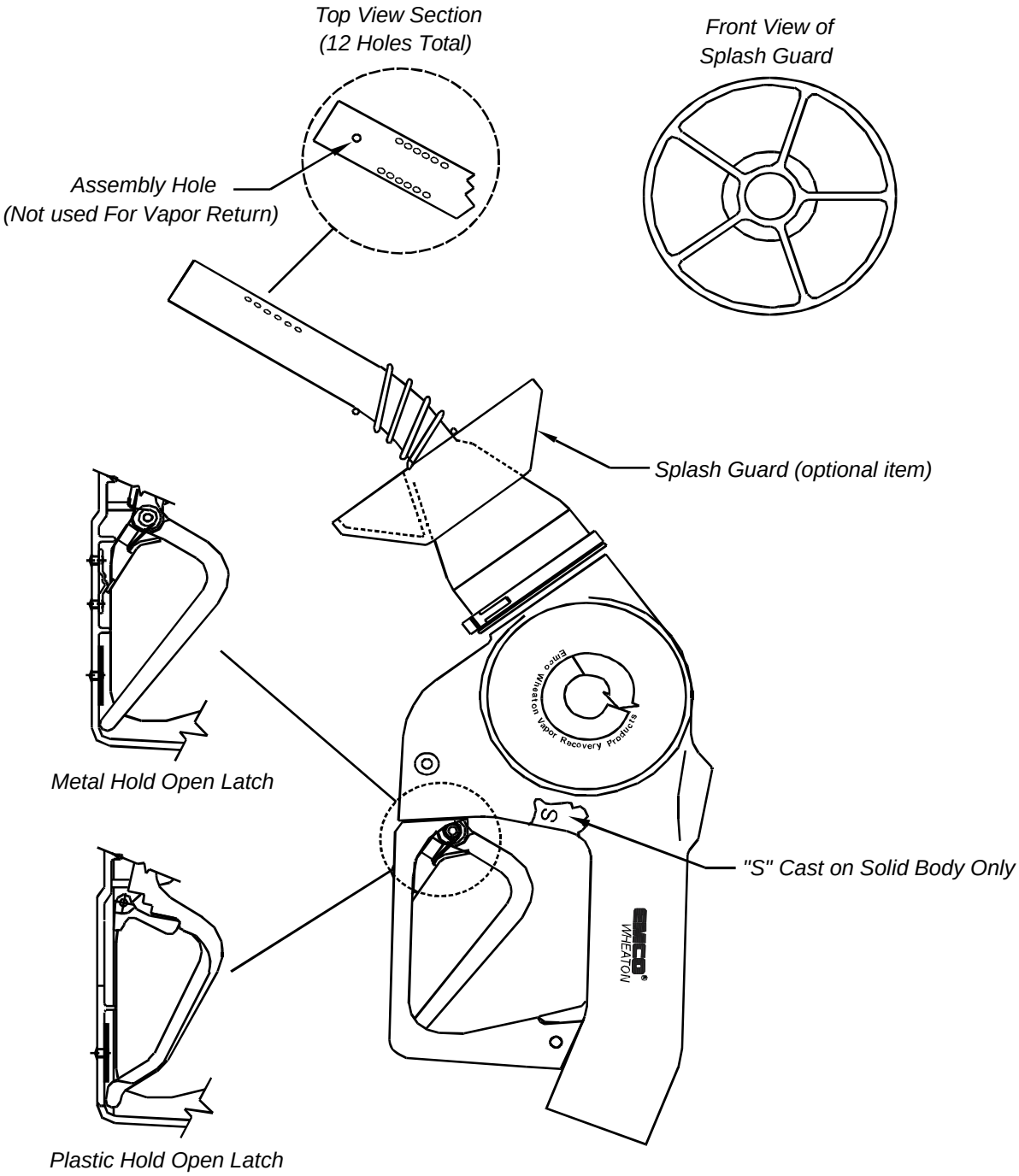

Executive Order G-70-150-AE

Exhibit 1

Figure 1A-2

Husky Model V3-6201xxx Nozzle

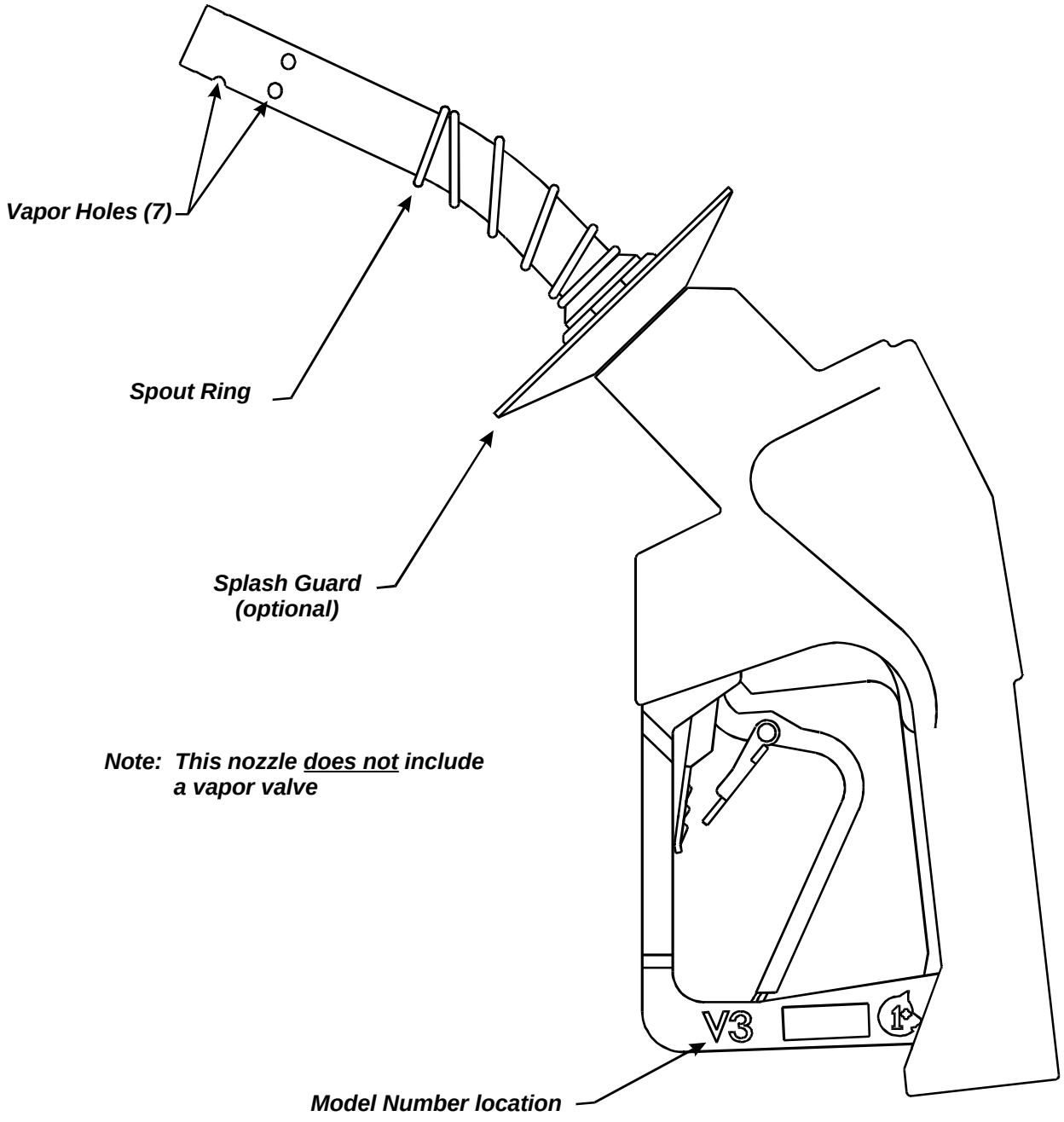

Executive Order G-70-150-AE

Exhibit 1

Figure 1A-3

OPW Model 11VAI-xx Nozzle

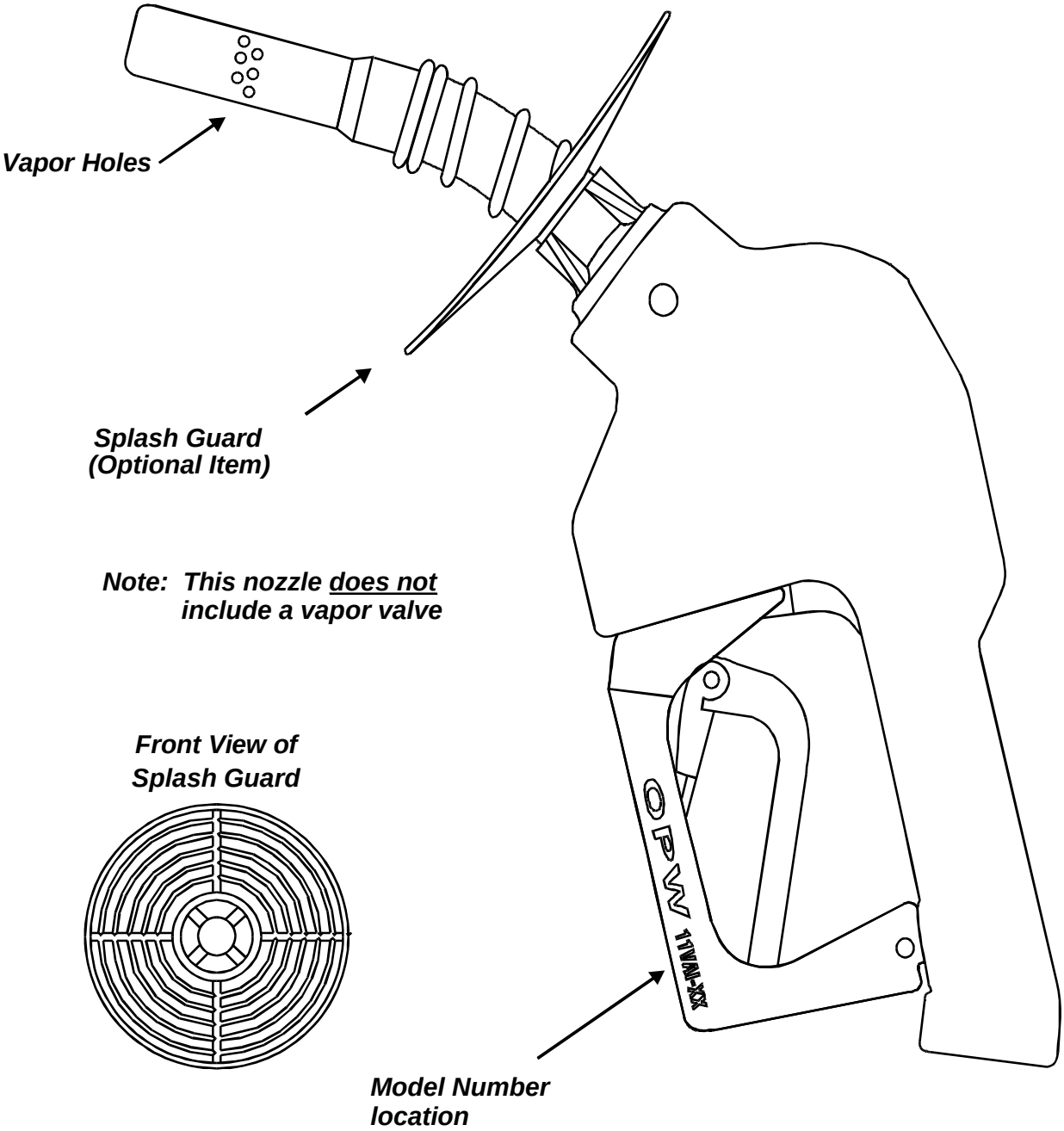

Executive Order G-70-150-AE

Exhibit 1

Figure 1B-1

Catlow Model ICVN Nozzle

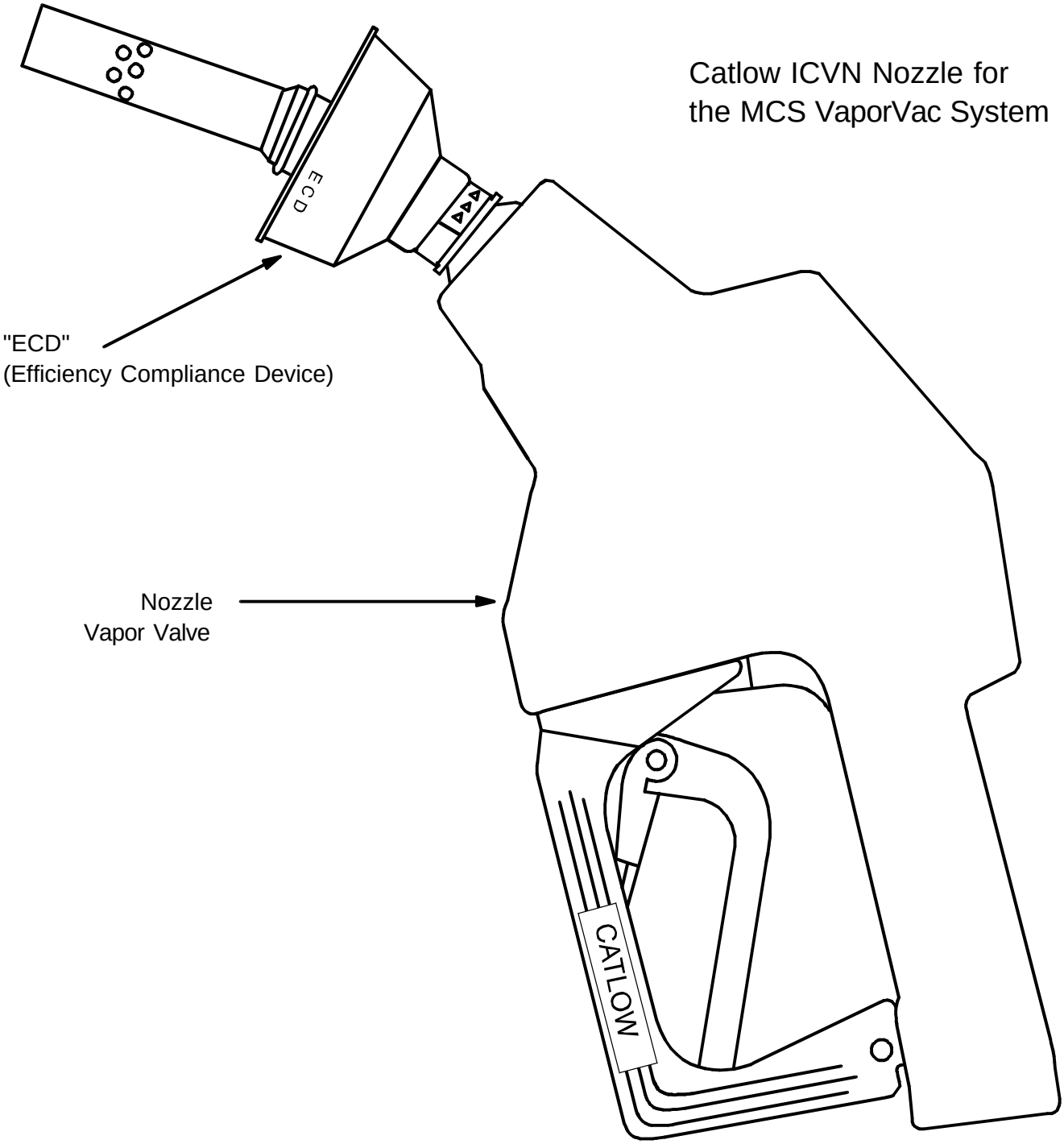

Executive Order G-70-150-AE

Exhibit 1

Figure 1B-2

Emco Wheaton Model A4505 Nozzle

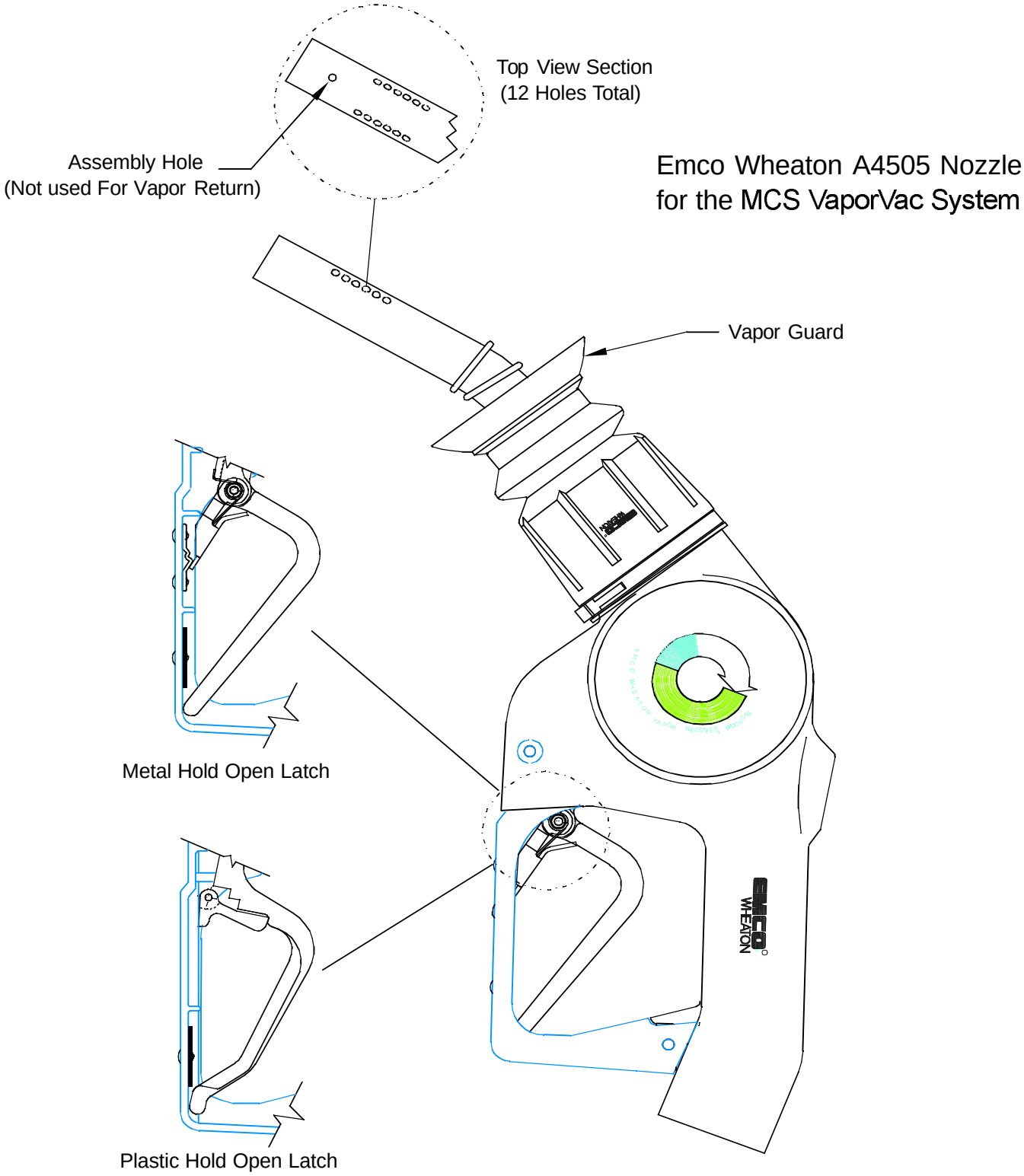

Executive Order G-70-150-AE

Exhibit 1

Figure 1B-3

Husky Model V34 6250 Nozzle

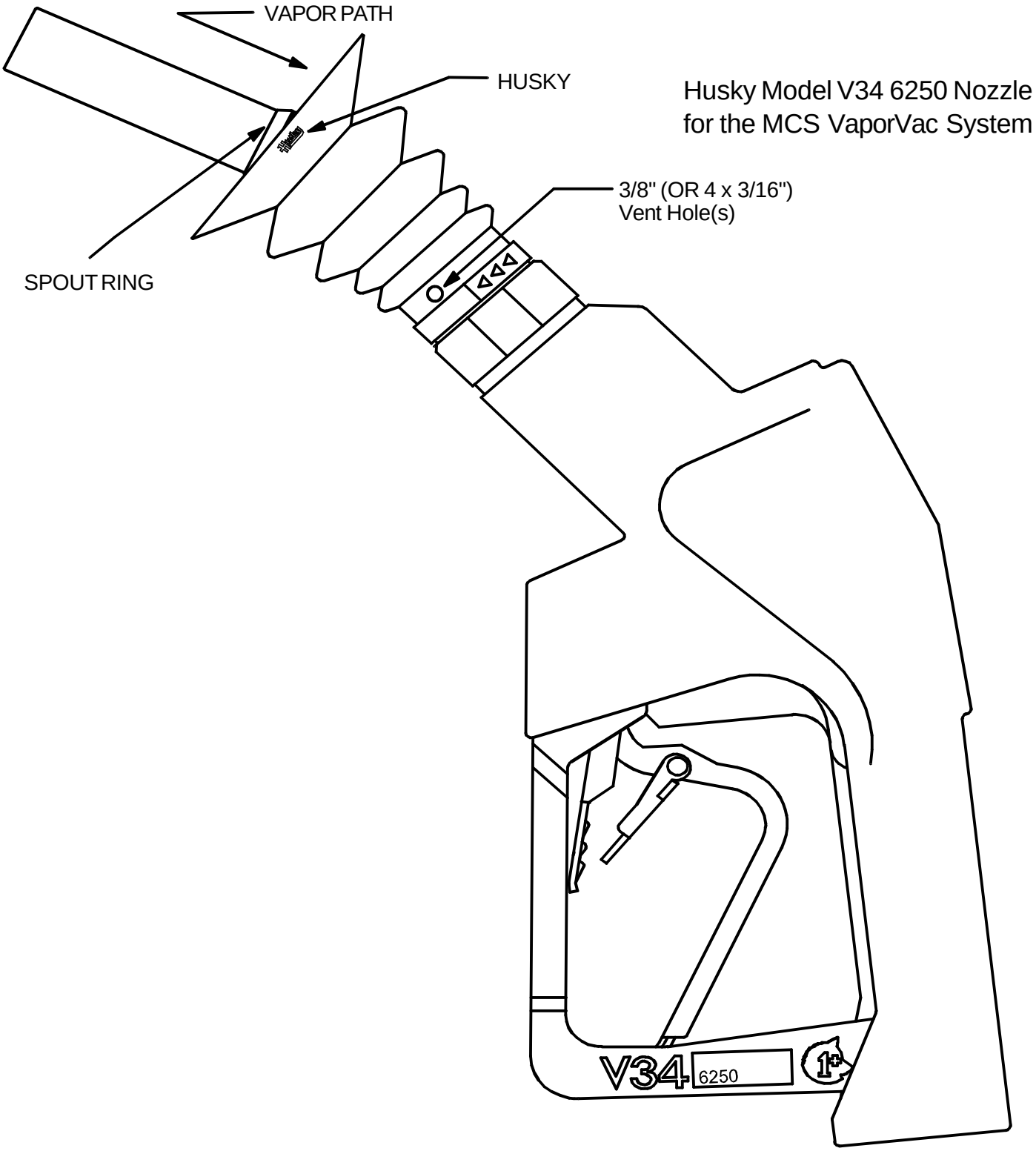

Executive Order G-70-150-AE

Exhibt 1

Figure 1B-4

OPW 12 VW Nozzle

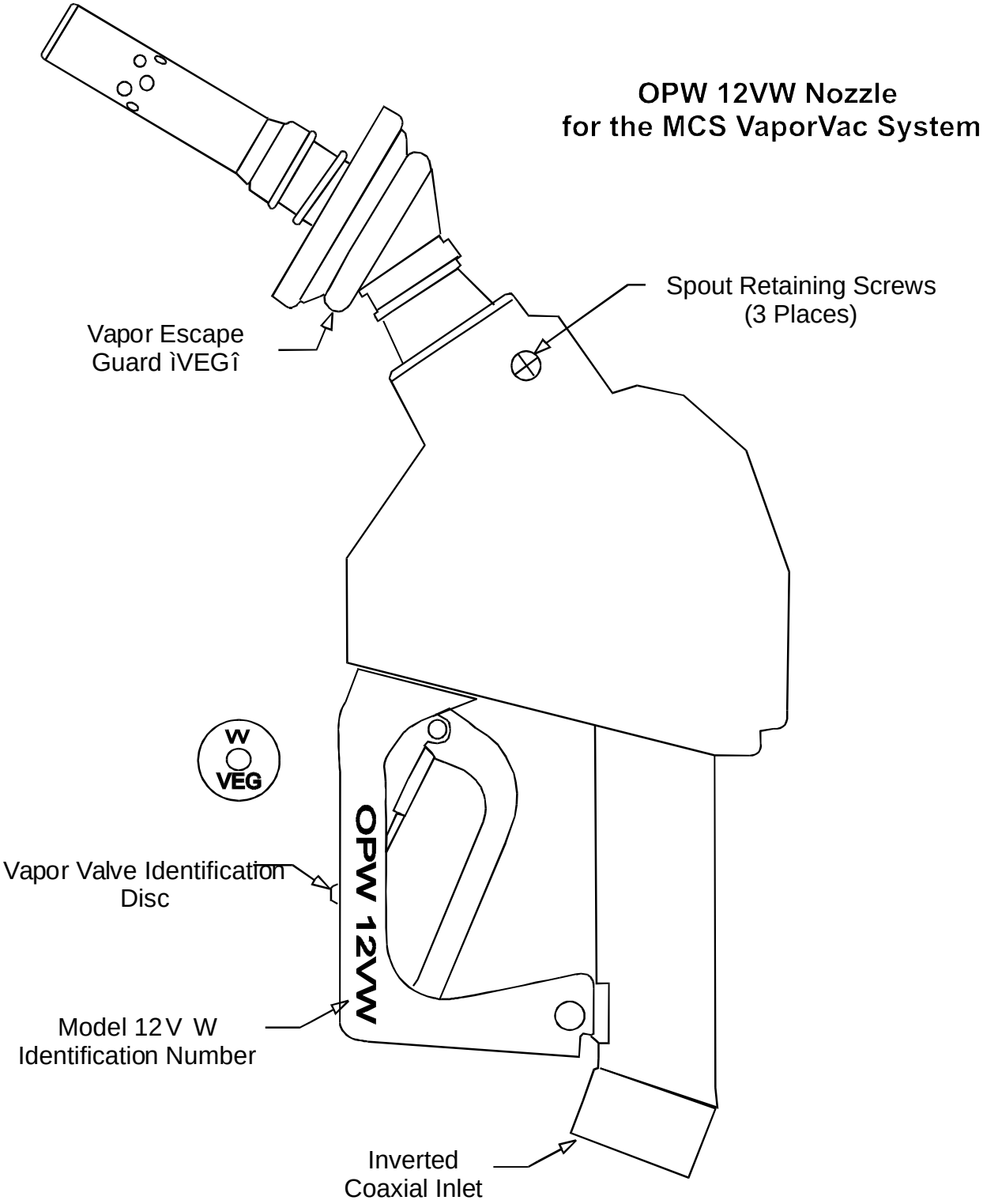

Executive Order G-70-150-AE

Exhibit 1

Figure 1C-1

MCS VaporVac Dispenser Types

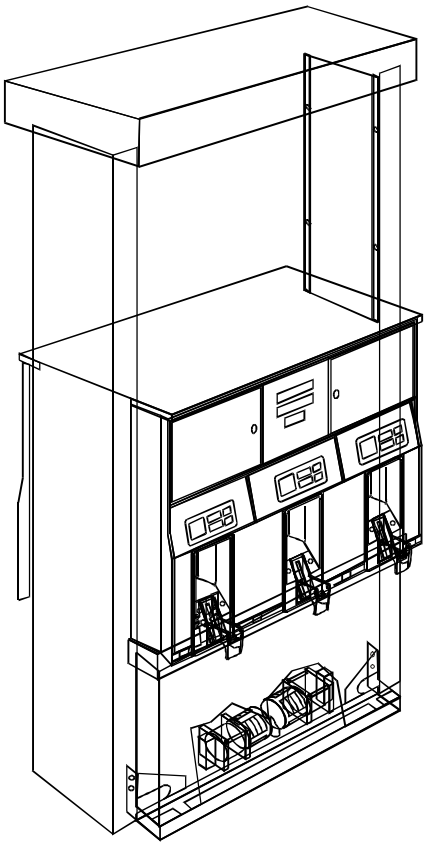

The Advantage MPD Dispenser Production Models

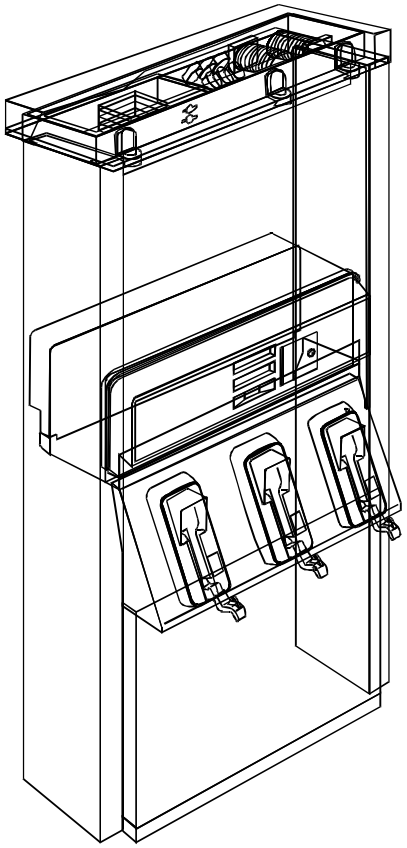

MPD 1-2/C and 3 Dispenser Retrofits

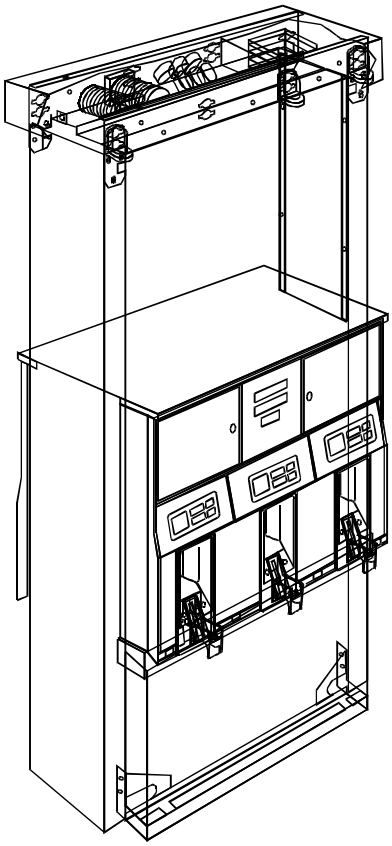

The Advantage MPD Dispenser Retrofits

Executive Order G-70-150-AE

Exhibit 1

Figure 1C-2

MCS VaporVac Dispenser Types

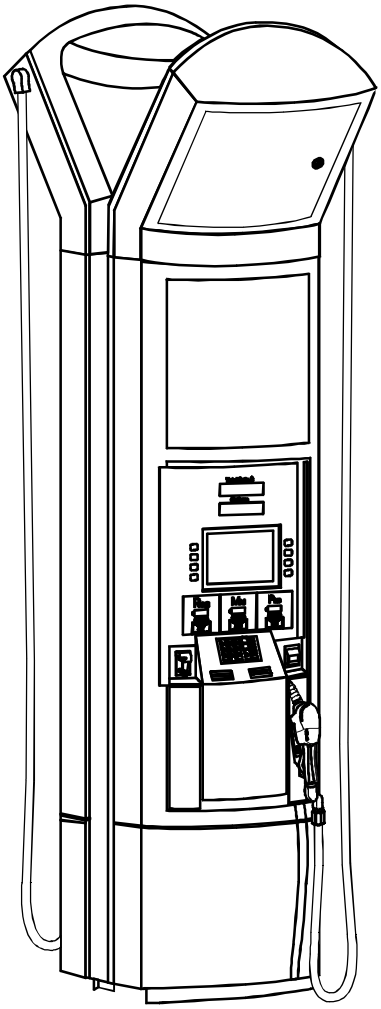

The Eclipse MPD Dispenser]
Production Model

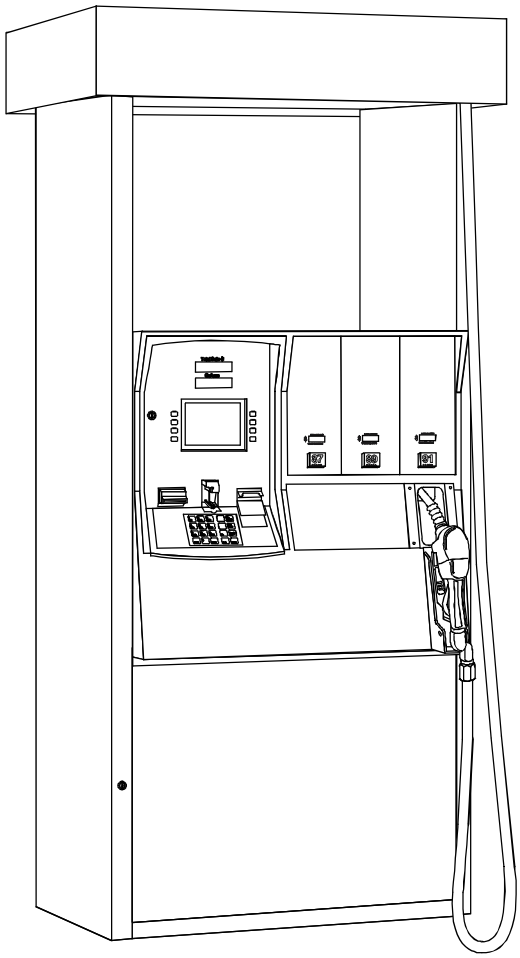

The Encore MPD Dispenser
Production Model

Executive Order G-70-150-AE

Exhibit 2

Specifications for the MCS VaporVac Bootless Nozzle System

Figures 2A-1 through 2A-4 contain drawings of a typical installation of the MCS VaporVac system. Figure 2B-1 depicts the location of component parts of the MCS VaporVac system. Figures 1C-1 and 1C-22 depicts the dispenser types approved for use with the MCS VaporVac system.

Nozzles

1. Failure mode testing demonstrated that blockage of some of the vapor collection holes in the spout of the nozzle has negligible effect on the operation of the system until the number of unblocked holes is less than required below.

Nozzle	Minimum Number of Unblocked Vapor Holes Required
Catlow ICVN	3
Emco Wheaton A4505	3
Emco Wheaton 4500	3
Husky V3	1
Husky V34 6250	N/A
OPW 11VAI-XX	4
OPW 12V	1

Any nozzle which is found to have fewer unobstructed vapor collection holes than are required is defective and shall be immediately removed from service.

Failure mode testing demonstrated that blockage of some of the vapor collection holes in the spout of the nozzle has negligible effect on the operation of the system until the number of unblocked holes is less than required above. The Husky V34 6250 nozzle uses a solid spout design which does not have any vapor collection holes on the tip of the spout. Gasoline vapors are directed to the base of the spout by the VSG where they can be collected by the MCS VaporVac System.

2. Nozzles shall be 100 percent performance checked at the factory, including checks of all shutoff mechanisms.

3. Nozzle Types

A. Non-booted, No Vapor Valve

1. **Emco Wheaton 4500-XX Nozzle** Fuel splash guards may be installed on the Emco Wheaton 4500-XX nozzles at the base of the spout, as shown in Figure 1A-1.

2. **Husky V3 6201-XXX Nozzle** Fuel splash guards may be installed on the Husky V3 6201-XX nozzles at the base of the spout, as shown in Figure 1A-2.

3. **OPW 11VAI Nozzle The OPW 11VAI nozzle shall use a stainless steel spout.** The stainless steel spout has a total of 18 vapor recovery holes. Figure 1A-3 shows a typical 11VAI nozzle with a stainless steel spout configuration. A fuel splash guard may be installed on the OPW 11VAI- XX nozzles at the base of the spout, as shown in Figures 1A-3.

B. Booted Nozzles With Vapor Check Valves

1. **Catlow ICVN** An Efficiency Compliance Device (ECD) shall be installed on the Catlow ICVN nozzle at the base of the spout, as shown in Figures 1B-1. Any Catlow ICVN nozzle with an ECD which is damaged with a slit from the base to the rim, is defective and shall be immediately removed from service

2. **Emco Wheaton A4505** A Vapor Guard (VG) shall be installed on the Emco Wheaton A4505 nozzle at the base of the spout, as shown in Figure 1A-5. Any Emco Wheaton A4505 nozzle with a VG which is damaged such that at least one-eighth (1/8) of the circumference is missing, or which has cumulative damage equivalent to at least 1/8 of the circumference missing, is defective and shall be immediately removed from service.

3. **Husky V34 6250** A Vapor Splash Guard (VSG) shall be installed on the Husky V34 6200 and V34 6250 nozzles at the base of the spout, as shown in Figures 1A-3 and 1A-4.

   Damaged or Missing VSG
   Any Husky V34 6250 nozzle with a VSG which is missing, or which is damaged such that at least a one and one-half (1.5) inch slit has developed, or which has cumulative damage equivalent to at least a 1.5 inch slit, is defective and shall be immediately removed from service.

   Holes in VSG
   Any Husky V34 6250 nozzle which is damaged such that greater than a three-eighths (3/8) inch hole has developed, or which has cumulative damage greater than a 3/8 inch hole, is defective and shall be immediately removed from service.

4. **OPW 12VW**
   A Vapor Escape Guard (VEG) shall be installed on the OPW 12VW nozzle at the base of the spout, as shown in Figure 1A-8. Any OPW 12VW nozzle with a VEG which is missing, or which is damaged such that at least three-quarters (3/4) of the circumference is missing, or which has cumulative damage equivalent to at least 3/4 of the circumference missing, is defective and shall be immediately removed from service.

Nozzle Replacement

The MCS VaporVac has one vapor pump per fueling point (dispenser side). All nozzles associated with the vapor pump must be of the same type: either a min-booted with a vapor valve (“mini-booted type”) or a non-boot nozzle without a vapor valve (“non-booted type”). Therefore, if there is more than one nozzle on a fueling point, replacement of a non-booted type nozzle with a booted-type nozzle shall require that the A/L be adjusted to the lower range, and that all other nozzles be of the same type on the fueling point. Different brands of the same nozzle type may be used on the same fueling point; nozzles requiring different A/L ranges may not be used on the same fueling point.

All new MCS VaporVac systems installed after August 1, 2000, shall use nozzles that incorporate a vapor check valve and a "mini-boot" and the A/L range for all new systems installed after August 1, 2000, shall be 1.0 ± 0.1.

Air To Liquid Ratio

1. The A/L ratio of the system measured at a flowrate between six and ten gallons per minute (6 - 10 gpm), shall be within the values listed in the following table. Any fueling point not capable of demonstrating compliance with this performance standard shall be deemed defective and removed from service. The A/L ratio shall be determined by using the CARB-approved procedure TP-201.5. Alternative test procedures may be used if they are determined by the Executive Officer, in writing, to yield comparable results.
   Figure 2C-1 illustrates the correct configuration for including or excluding the shut-off port. **Figure 2C-2** includes an illustration and instructions for conducting A/L testing with the Husky 6250 nozzle.

Nozzle	Shut-off Aspirator Port	A/L Installation	A/L Ratio
Emco Wheaton 4500-XX	excluded	Figure 2C	**1.1 +/- 0.10**
Husky 6201-XXX	included	Figure 2C	
OPW 11VAI-XX	excluded	Figure 2C	
Catlow ICVN	excluded	Figure 2C	**1.0 +/- 0.10**
Emco Wheaton A4505	excluded	Figure 2D	
Husky V34 6250	excluded	Figure 2C	
OPW 12VW	excluded	Figure 2C	

NOTE: This test procedure returns air rather than vapor to the storage tank, and normally causes an increase in storage tank pressure which may result in vent emissions. This is a temporary condition due to the test and should not be considered an indication of malfunction or noncompliance.

Dispensing Rate

1. The dispensing rate for installations of the VaporVac System shall not exceed 10.0 gallons per minute at anytime. This shall be determined as specified in Exhibit 4.

Solenoid Vapor Valves

1. The VaporVac system is equipped with solenoid vapor valves. The maximum allowable leak rate for new vapor valves shall not exceed the following:

   0.038 CFH at a pressure of two inches water column (2" wc), and
   0.005 CFH at a vacuum of twenty seven inches water column (approx 1 psi).

2. The vapor valve ensures proper operation of the system and prevents the ingestion of air into the system. Any defective vapor valve shall be immediately removed from service. The integrity of the system shall be restored by replacing the vapor valve or otherwise closing the vapor path as soon as practicable.

3. Sealing of the vapor holes on the nozzle spout (such as placing a balloon or the fingers of a glove over the holes on the nozzle spout, or bagging nozzles) is **not** permitted during static pressure decay tests. Sealing of the nozzle vapor holes during a static pressure decay test may mask a defective vapor valve.

Inverted Coaxial Hoses

1. The length of hose which may be in contact with the island and/or ground when the nozzle is properly mounted on the dispenser is limited to six inches (6").

2. The maximum length of the hose shall be fifteen feet (15').

Breakaway Couplings

1. Breakaway couplings are optional but, if installed, only CARB certified breakaways may be used. Breakaway couplings which do not close the vapor path may be used because the MCS VaporVac solenoid valves close the vapor path when breakaway couplings are separated.

VaporVac System

1. The MCS VaporVac shall be equipped with electronic safeguards designed to ensure that no fuel is dispensed unless the VaporVac system is operating properly. An error code is indicated on the sales display of the dispenser which identifies the problem as being related to the MCS VaporVac system.

2. The following conditions shall halt or inhibit the operation of the one side of the dispenser, with an error code indicated, while allowing the other side to operate.

   A. Excessive vapor pump motor current (possible causes include bearing failure, locked rotor, motor winding shorts or fluid in pump cavity for more time than required to clear a blockage).

   B. Failure of the vapor pump to start while fuel is being dispensed (possible causes include control electronics failure, disconnected or severed motor wiring, or locked rotor).

   C. Vapor pump activity during idle periods when no fuel is being dispensed.

   D. Maximum permissible pump speed exceeded (possible causes include loose connections in vapor path or pump malfunction).

   E. Disconnection or accidental swapping of Side A/B vapor pumps.

   F. The following conditions shall shut down the entire dispenser in a manner similar to a "dead-man switch", in that the MCS VaporVac system must actively prevent its activation. This is achieved by requiring the MCS VaporVac system to maintain a normally-closed switch, which will open should the MCS VaporVac system be taken "off-line" via various mechanisms.

      a. Failure or loss of the MCS VaporVac power supply.

      b. A.C. line fuse opens.

      c. Cabling/wiring missing or disconnected (tampering).

Pressure/Vacuum Valves for Storage Tank Vents

1. A pressure/vacuum (P/V) valve shall be installed on each tank vent. Vent lines may be manifolded to minimize the number of P/V valves and potential leak sources, provided the manifold is installed at a height not less than 12 feet above the driveway surface used for Phase I tank truck filling operations. At least one P/V valve shall be installed on manifolded vents. If two P/V valves are desired, they shall be installed in parallel, so that each can serve as a backup for the other if one should fail to open properly. The P/V valve shall be a CARB-certified valve as specified in Exhibit 1. The outlets shall vent upward and be located to eliminate the possibility of vapor accumulating or traveling to a source of ignition or entering adjacent buildings.

2. The P/V valve is designed to open at a pressure of approximately three inches water column (3" wc). Storage tank pressure which exceeds 3" wc for more than a short time may indicate a malfunctioning pressure/vacuum vent valve.

Vapor Recovery Piping Configurations

1. The recommended maximum pressure drop through the system, measured at a flow rate of 60 SCFH with dry Nitrogen gas, is 0.02 inches water column (0.03 inches wc at 60 SCFH if the measurement includes an impact valve). The maximum allowable pressure drop through the system shall never exceed one/half inch (0.5") water column at 60 SCFH. The pressure drop shall be measured from the dispenser riser to the UST with the pressure/vacuum valves installed and with the poppeted Phase I vapor connection open.

   Note: The A/L test may be used to verify proper operation of the system, in lieu of measuring the pressure drop through the lines, provided that at least two gallons of product is introduced into the system at the termination of the vapor return lines, prior to the test.

2. All vapor return lines shall slope a minimum of 1/8 inch per foot. A slope of 1/4 inch or more per foot is recommended wherever feasible.

3. The dispenser shall be connected to the riser with either flexible or rigid material which is listed for use with gasoline. The dispenser-to-riser connection shall be installed so that any liquid in the lines will drain toward the storage tank. The internal diameter of the connector, including all fittings, shall not be less than three-fourths inch (3/4").

4. All vapor return and vent piping shall be installed in accordance with the manufacturer's instructions and all applicable regulations.

5. No product shall be dispensed from any fueling point associated with a vapor line which is disconnected and open to the atmosphere. If vapor lines are manifolded, this includes all fueling points in the facility.

6. The recommended nominal inside diameter of the underground Phase II plumbing is as indicated in Figures 2A-1 through 2A-4. Smaller vapor lines are not recommended but may be used provided the pressure drop criteria specified above are met. The vapor return lines shall be manifolded below grade at the tanks as indicated in the figures.

   Exception: For installations with a vapor return line directly to only one tank, and for which a manifold on the tank vents will be used to provide part of the vapor return path to other tanks, the vent manifold may be used as an alternative to the underground manifold only in existing installations where the vapor piping is already installed, and shall not be used in "new" installations where vapor piping is being installed. For installations with dedicated vapor piping directly to each tank, the vent manifold is approved for both new and existing installations and an additional tank manifold below grade is optional but not required.

Phase I System

WARNING: Phase I fill caps should be opened with caution because the storage tank may be under pressure.

1. The Phase I system shall be a CARB-certified system which is in good working order and which demonstrates compliance with the static pressure decay test criteria contained in Exhibit 3 of this Order. Coaxial Phase I systems shall not be used with new installations of the system. **Replacement of storage tanks at existing facilities, or modifications which cause the installation of new or replacement Phase I vapor recovery equipment, are considered new installations with regard to this prohibition**. Districts may grant an exception to this prohibition for coaxial Phase I systems CARB-certified after January 1, 1994, as compatible for use with Phase II systems which require pressure/vacuum vent valves. Where installation of the MCS VaporVac system is made by retrofitting previously installed equipment, local districts may elect to allow existing coaxial Phase I systems to remain in use for a specifically identified period of time provided the following conditions are met:

    - the existing coaxial Phase I system is a poppeted, CARB-certified system capable of demonstrating compliance with the static pressure decay test as specified above; and

    - installation of the Phase II system requires no modification of the UST(s) and/or connections.

2. Spill containment manholes which have drain valves shall demonstrate compliance with the static pressure decay criteria with the drain valves installed as in normal operation. Manholes with cover-actuated drain valves shall not be used in new installations (as defined above). Manholes with cover-actuated drain valves may remain in use in facilities where installation of the MCS VaporVac system does not require modification of the tank fittings provided the facility demonstrates compliance with static pressure decay test criteria both with the cover in place and with the cover removed.

3. The Phase I vapor recovery system shall be operated during product deliveries so as to minimize the loss of vapors from the facility storage tank which may be under pressure. Provided it is not in conflict with established safety procedures, this shall be accomplished in the following manner:

    - **the Phase I vapor return hose is connected to the delivery tank and to the delivery elbow before the elbow is connected to the facility storage tank;**

    - **the delivery tank is opened only after all vapor connections have been made, and is closed before disconnection of any vapor return hoses; and**

    - **the vapor return hose is disconnected from the facility storage tank before it is disconnected from the delivery tank.**

4. Phase I deliveries shall be accomplished so as to ensure that there is at least one vapor connection between the cargo tank compartment headspace and the storage tank associated with the product delivery. There shall be no more than two product hoses used with one vapor hose connected, and no more than three product hoses used with two vapor hoses connected.

5. Storage tank vent pipes, and fill and vapor and manhole tops, shall be maintained any color which minimizes solar gain and has a reflective effectiveness of 55% or greater. Reflectivity shall be determined by visual comparison of the paint with paint color cards obtained from a paint manufacturer who uses the "Master Pallet Notation" to specify the paint color (i.e. 58YY *88*/180 where the number in italics is the paint reflectivity). Examples of colors having a reflective effectiveness of 55% or greater include, but not limited to: yellow, light gray, aluminum, tan, red iron oxide, cream or pale blue, light green, glossy gray, light blue, light pink, light cream, white, silver, beige, tin plate and mirrored finish. **Existing facilities which were installed before April 1, 1996, must be in compliance with this requirement no later than January 1, 1998. Manhole covers which are color coded for product identification are exempted from this requirement.**

Executive Order G-70-150-AE

Exhibit 2

Figure 2A-1

Typical Installation of the
MCS VaporVac Phase II Vapor Recovery System
with Two-Point Phase I System

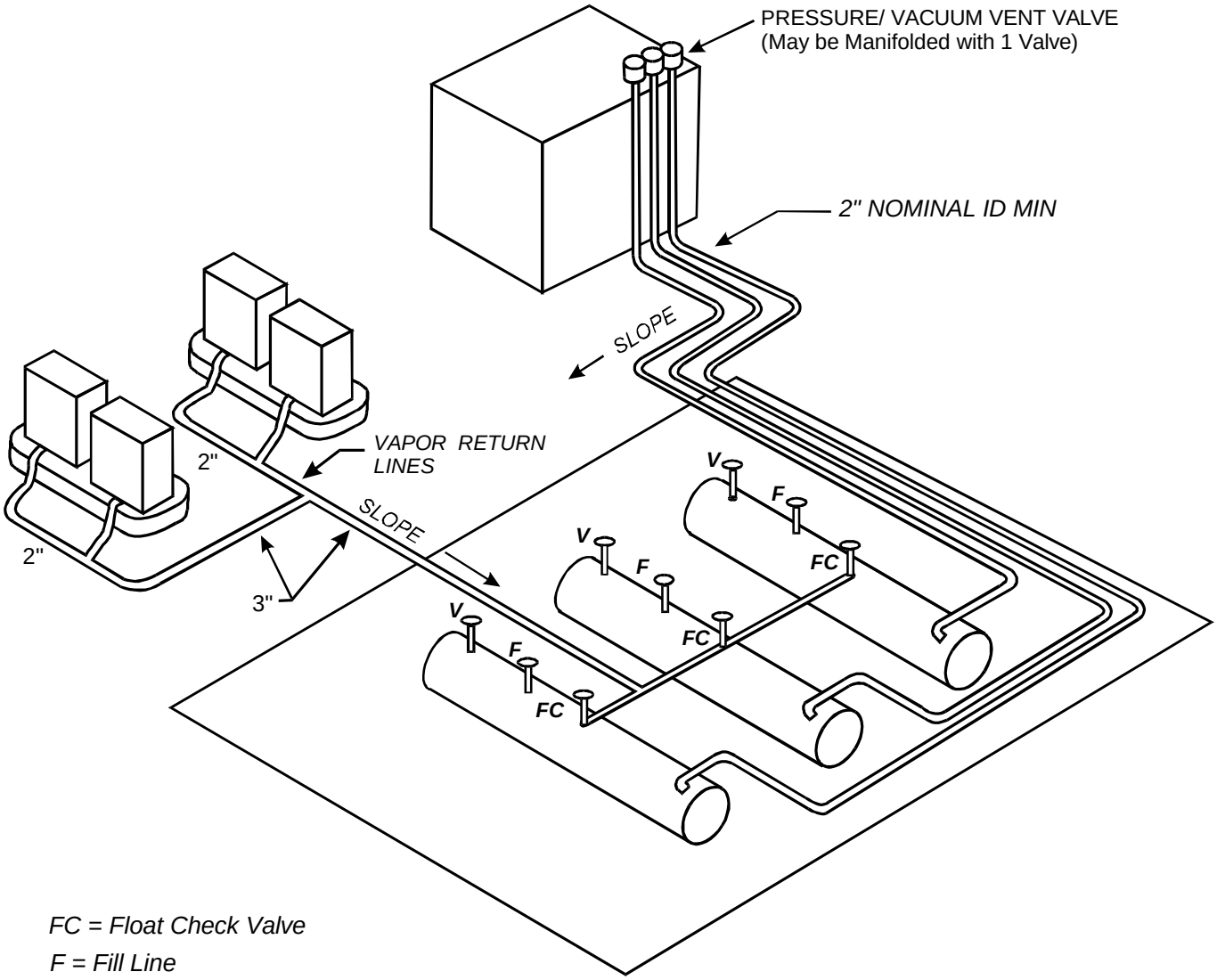

FC = Float Check Valve

F = Fill Line

V = Phase I Vapor Recovery

Note: 1. All Vapor/Vent Lines are 3" Nominal ID Minimum Except as Noted

2. Slope: 1/8" per foot Min.

1/4" per Foot Prefered

3. Maintain 2'0" Clearance Between Fill Line and

Phase I Vapor Return Line to Delivery Truck

Executive Order G-70-150-AE

Exhibit 2

Figure 2A-2

Typical Installation of the
MCS VaporVac Phase II Vapor Recovery System
with Two-Point Phase I System

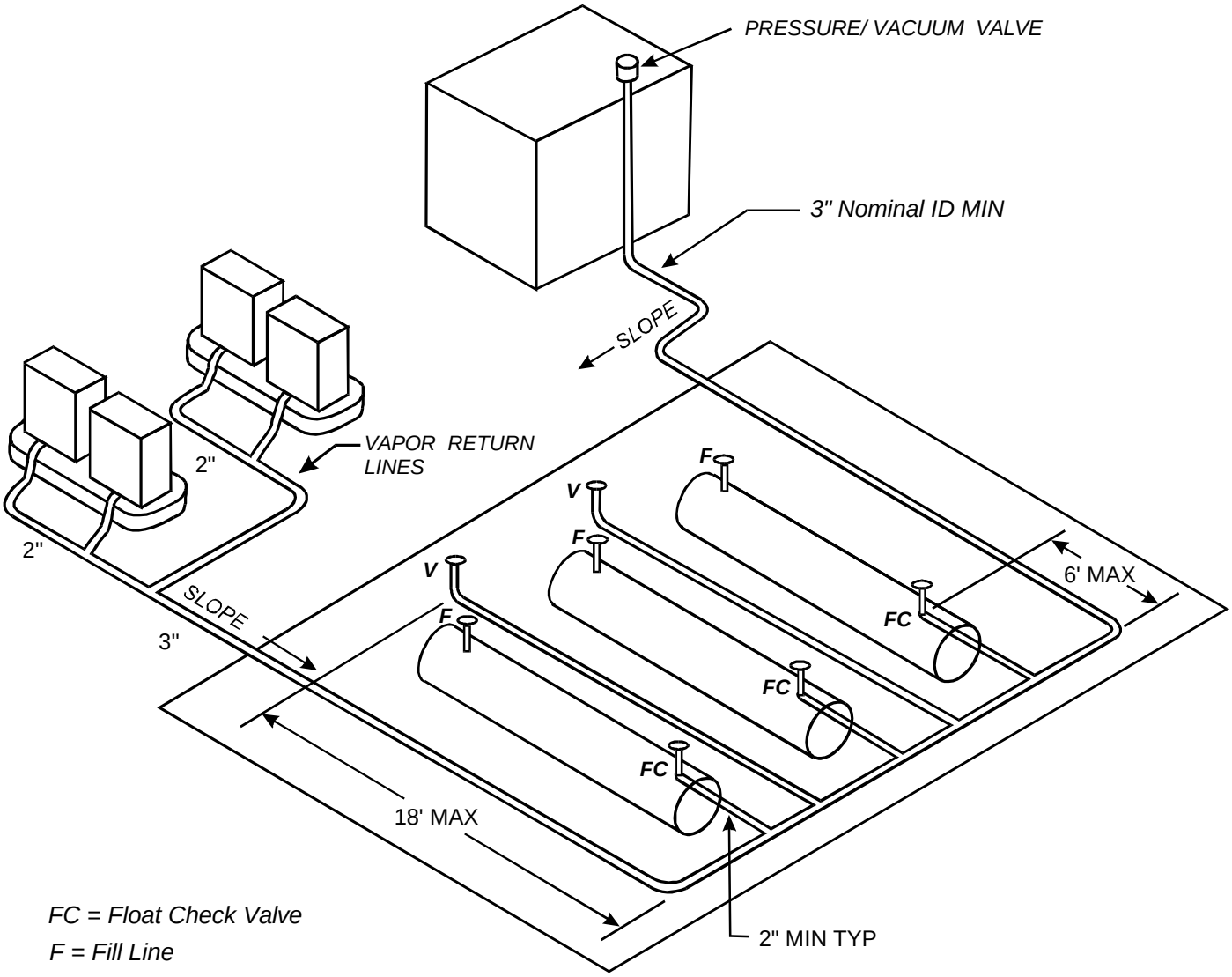

FC = Float Check Valve

F = Fill Line

V = Phase I Vapor Recovery

Note: 1. All Vapor/Vent Lines are 3" Nominal ID Minimum Except as Noted

2. Slope: 1/8" per foot Min.

1/4" per Foot Prefered

3. Maintain 2'0" Clearance Between Fill Line and Phase I Vapor Return Line to Delivery Truck

Executive Order G-70-150-AE

Exhibit 2

Figure 2A-3

Typical Installation of the
MCS VaporVac Phase II Vapor Recovery System
with Two-Point Phase I System

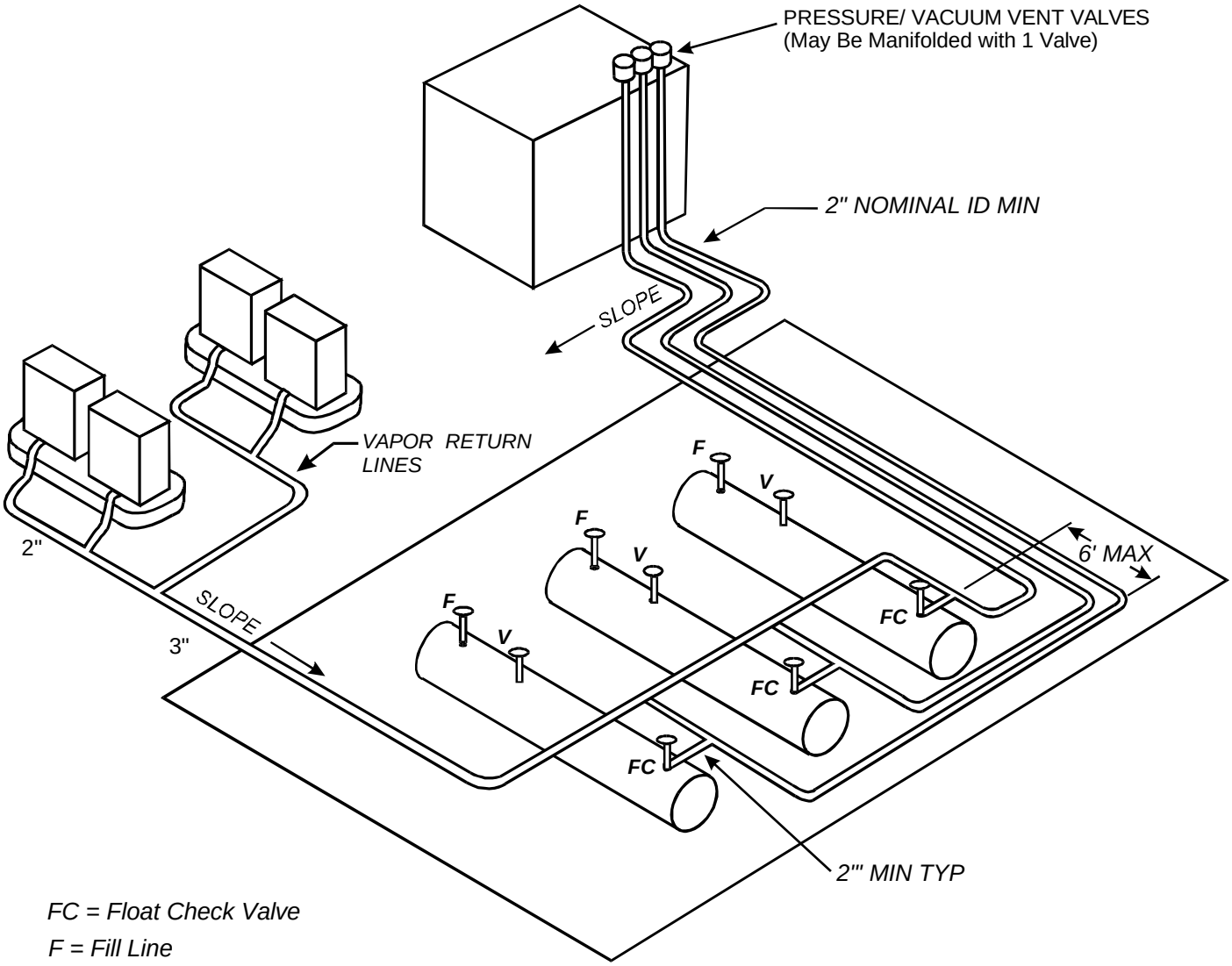

FC = Float Check Valve

F = Fill Line

V = Phase I Vapor Recovery

Note: 1. All Vapor/Vent Lines are 3" Nominal ID Minimum Except as Noted

2. Slope: 1/8" per foot Min.

1/4" per Foot Prefered

3. Maintain 2'0" Clearance Between Fill Line and

Phase I Vapor Return Line to Delivery Truck

Executive Order G-70-150-AE

Exhibit 2

Figure 2A-4

Typical Installation of the
MCS VaporVac Phase II Vapor Recovery System
with Two-Point Phase I System

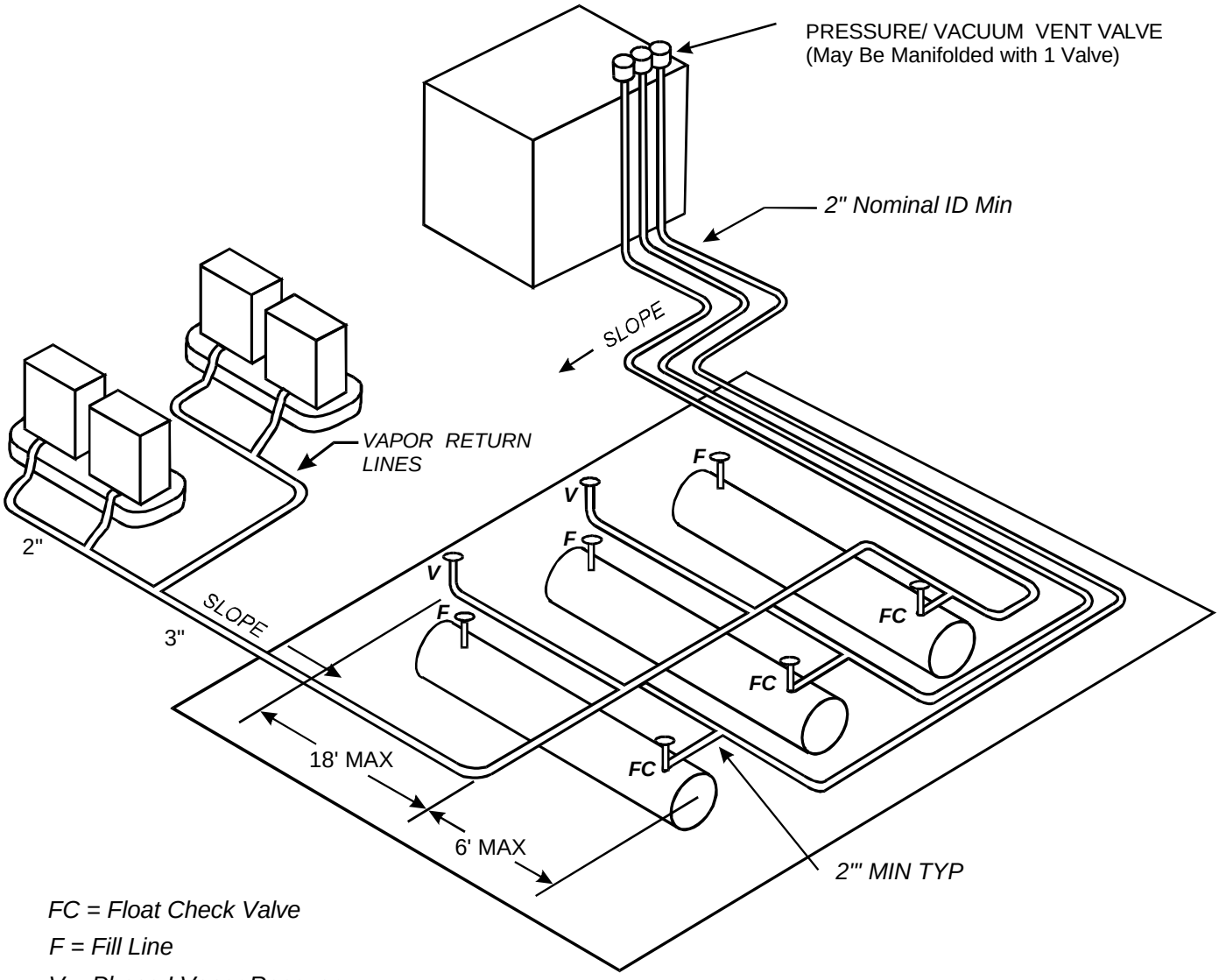

FC = Float Check Valve

F = Fill Line

V = Phase I Vapor Recovery

Note: 1. All Vapor/Vent Lines are 3" Nominal ID Minimum Except as Noted

2. Slope: 1/8" per foot Min.

1/4" per Foot Prefered

3. Maintain 2'0" Clearance Between Fill Line and

Phase I Vapor Return Line to Delivery Truck

Executive Order G-70-150-AE

Exhibit 2

Figure 2B-1

Component Parts of the MCS VaporVac System

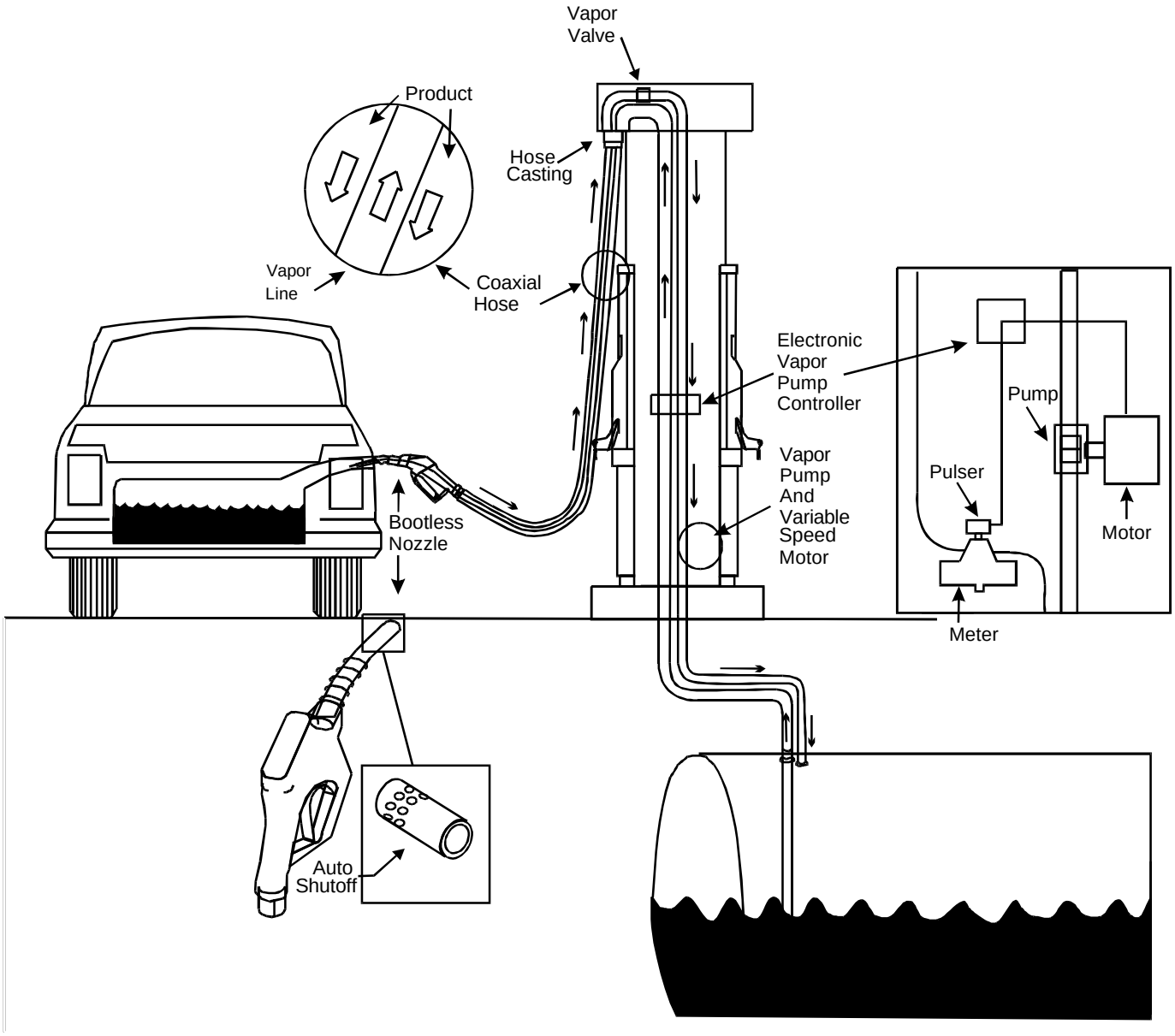

Executive Order G-70-150-AE

Exhibit 2

Figure 2C-1

Installation of the A/L Adaptor

Exclude Shut-off Port: Note that the o-ring has isolated the shut-off port from the vapor holes

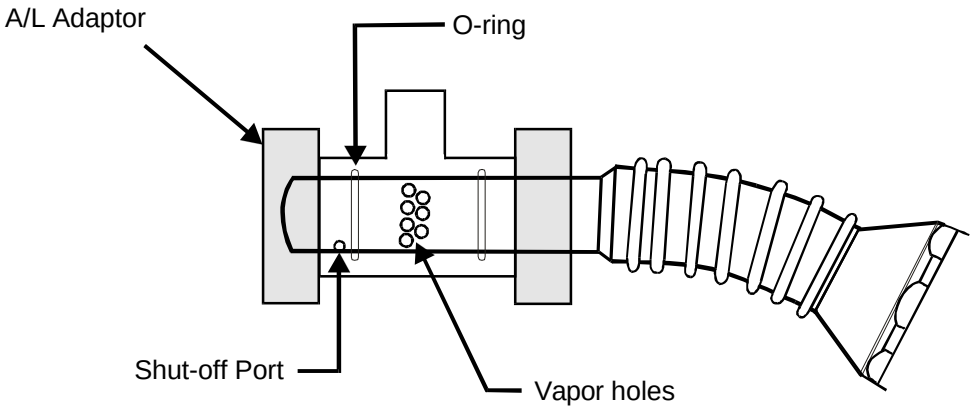

Include Shut-off Port: Note that the o-ring includes the shut-off port with the vapor holes

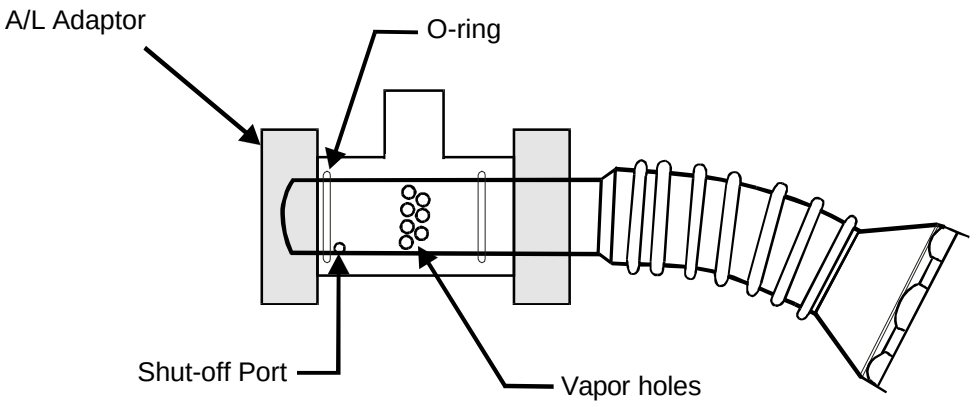

Executive Order G-70-150-AE

Exhibit 2

Figure 2C-2

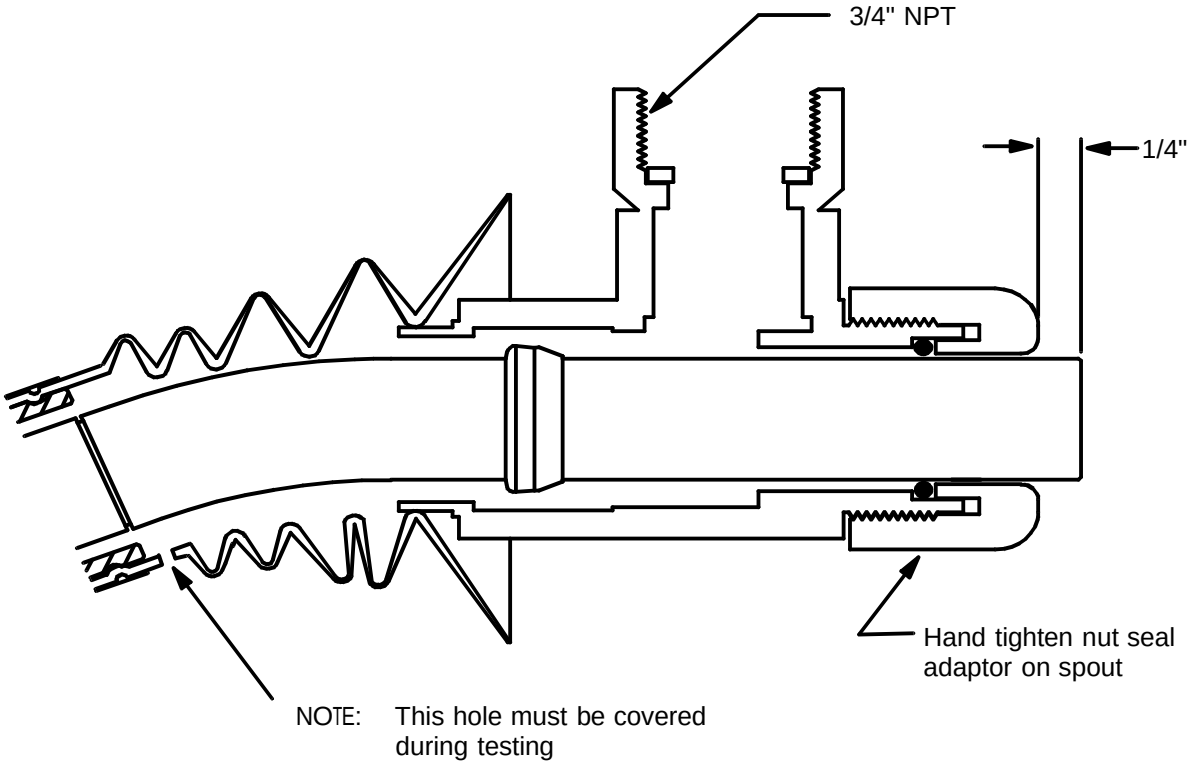

Instructions for use of the 6250 A/L Adaptor

1) Inspect the Vapor Splash Guard (VSG) and spout for damage. Any tears or extra holes in the VSG will reduce the accuracy of the test.

2) Slide the A/L adaptor over the spout such that 1/4" of the spout is exposed past the nut.

3) Hand tighten the nut. This will seal the A/L adaptor to the spout.

4) Pull the VSG up over the smallest step on the A/L adaptor. This will seal the VSG to the adaptor.

5) Using a piece of tape, seal the 1/8" hole in the cuff of the VSG.

Executive Order G-70-150-AE

Exhibit 3

STATIC PRESSURE INTEGRITY TEST
UNDERGROUND STORAGE TANKS

1. APPLICABILITY

1.1 This test procedure is used to quantify the vapor tightness of vapor recovery systems installed at gasoline dispensing facilities (GDF) equipped with vacuum assist systems which require pressure/vacuum (P/V) valves, provided that the designed pressure setting of the P/V valves is a minimum of 2.5 inches of water column (inches H_2O). Excessive leaks in the vapor recovery system will increase the quantity of fugitive hydrocarbon emissions and lower the overall efficiencies of both the Phase I and Phase II vapor recovery systems.

1.2 Systems equipped with a P/V valve(s) allowed to have a designed cracking pressure less than 2.5 inches H_2O shall be bagged to eliminate any flow contribution through the valve assembly from the test results. The valve/vent pipe connection, however, shall remain unobstructed during this test.

2. PRINCIPLE

2.1 The entire vapor recovery system is pressurized with nitrogen to two (2.0) inches H_2O. The system pressure is then allowed to decay and the pressure after five (5) minutes is compared with an allowable value. The minimum allowable five-minute final pressure is based on the system ullage and pressure decay equations. For the purpose of compliance determination, this test shall be conducted after all back-filling, paving and installation of all Phase I and Phase II components, including P/V valves, has been completed.

2.2 For GDF equipped with a coaxial Phase I system, this test shall be conducted at a Phase II vapor riser. For GDF which utilize a two-point Phase I system, this test may be conducted at either a Phase II riser or a Phase I vapor coupler provided that the criteria set forth in Section 6.7 have been met. If the integrity criteria for two-point systems specified in Section 6.7 are met, it is recommended that this test be conducted at the Phase I vapor coupler.

3. RANGE

3.1 If mechanical pressure gauges are employed, the full-scale range of the pressure gauges shall be 0-2.0, 0-1.0, and 0-0.50 inches H_2O column. Maximum incremental graduations of the pressure gauge shall be 0.05 inches H_2O and the minimum accuracy of the gauge shall be three percent of full scale. The minimum diameter of the pressure gauge face shall be 4 inches. A 0-2 inches H_2O inclined manometer, or equivalent, may be used provided that the minor scale divisions do not exceed 0.02 inches H_2O.

3.2 If an electronic pressure measuring device is used, the full-scale range of the device shall not exceed 0-10 inches H_2O with a minimum accuracy of 0.5 percent of full-scale. A 0-20 inches H_2O device may be used, provided the equivalent accuracy is not less than 0.25 percent of full scale.

3.3 The minimum and maximum total ullages shall be 500 and 25,000 gallons, respectively. These values are exclusive of all vapor piping volumes.

3.4 The minimum and maximum nitrogen feed-rates, into the system, shall be one (1) and five (5) CFM, respectively.

4. INTERFERENCES

4.1 Introduction of nitrogen into the system at flowrates exceeding five (5) CFM may bias the results of the test toward non-compliance. Only gaseous nitrogen shall be used to conduct this test. Air, liquefied nitrogen, helium, or any gas other than nitrogen **shall not be used** for this test procedure.

4.2 The results of this Static Pressure Integrity Test shall not be used to verify compliance if an Air to Liquid Volumetric Ratio Test (Test Procedure TP-201.5 or equivalent) was conducted within the 24 hours prior to this test.

Figure 3-1

"T" Connector Assembly

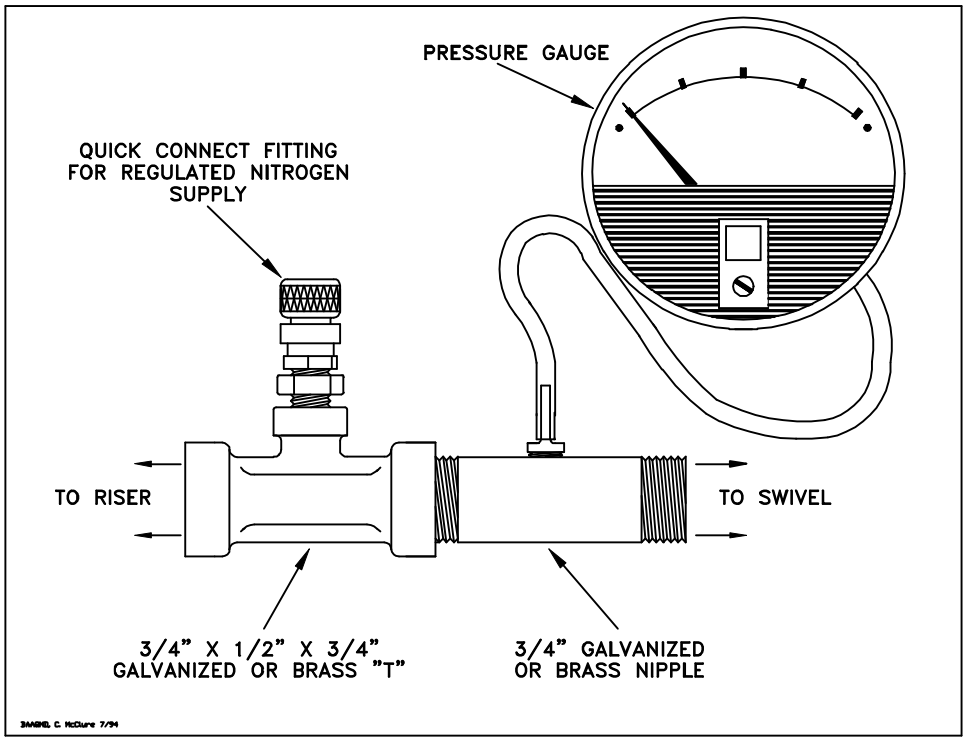

5. APPARATUS

5.1 Nitrogen. Use commercial grade nitrogen in a high pressure cylinder, equipped with a two-stage pressure regulator and a one psig pressure relief valve.

5.2 Pressure Measuring Device. Use 0-2.0, 0-1.0, and 0-0.50 inches H_2O pressure gauges connected in parallel, a 0-2 inches H_2O manometer, or an electronic pressure measuring device to monitor the pressure decay in the vapor recovery system. The pressure measuring device shall, at a minimum, be readable to the nearest 0.05 inches H_2O.

5.3 "T" Connector Assembly. See Figure 3-1 for example.

5.4 Vapor Coupler Integrity Assembly. Assemble OPW 633-A, 633-B, and 634-A adapters, or equivalent, as shown in Figure 3-2. If the test is to be conducted at the storage tank Phase I vapor coupler, this assembly shall be used prior to conducting the static leak test in order to verify the pressure integrity of the vapor poppet. The internal volume of this assembly shall not exceed 0.1 cubic feet.

Figure 3-2

Vapor Coupler Integrity Assembly

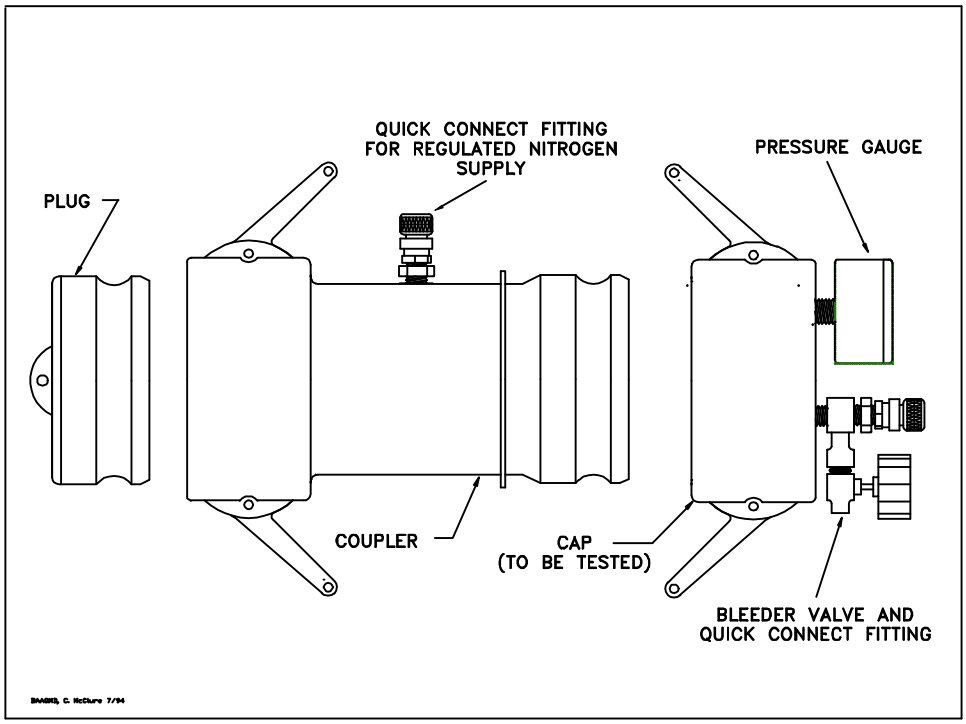

5.5 Vapor Coupler Test Assembly. Use a compatible OPW 634-B cap, or equivalent, equipped with a center probe to open the poppet, a pressure measuring device to monitor the pressure decay, and a connection for the introduction of nitrogen into the system. See Figure 3-3 for an example.

Figure 3-3

Vapor Coupler Integrity Assembly

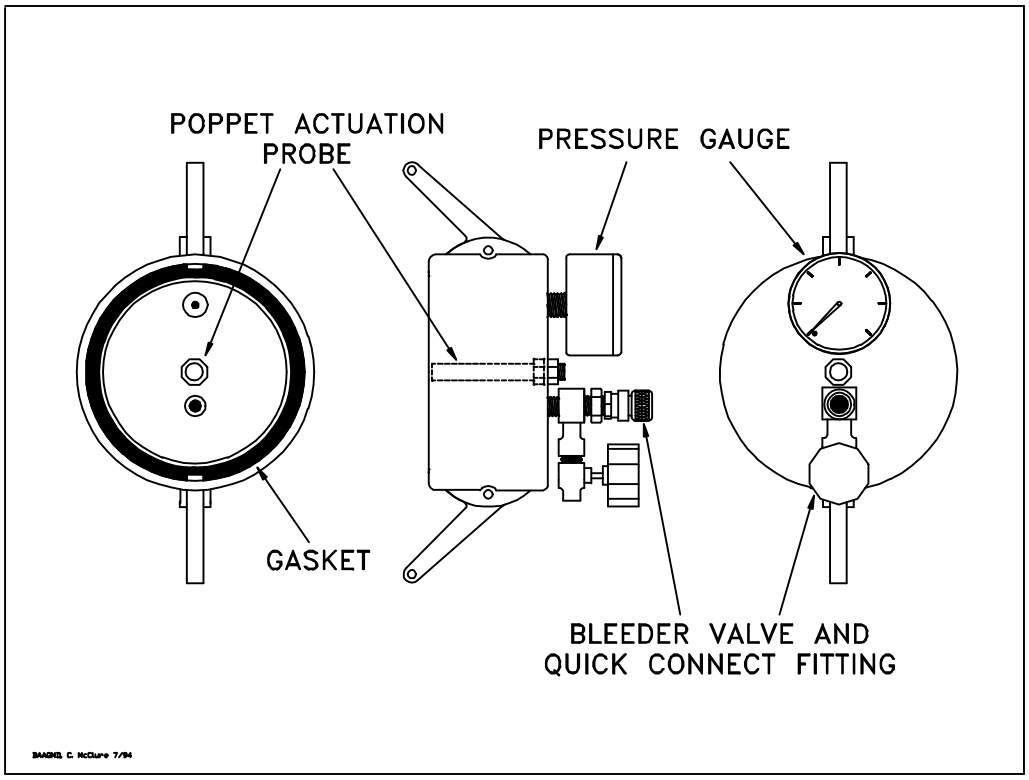

5.6 Stopwatch. Use a stopwatch accurate to within 0.2 seconds.

5.7 Flowmeter. Use a Dwyer flowmeter, Model RMC-104, or equivalent, to determine the required pressure setting of the delivery pressure gauge on the nitrogen supply pressure regulator. This pressure shall be set such that the nitrogen flowrate is between 1.0 and 5.0 CFM.

5.8 Combustible Gas Detector. A Bacharach Instrument Company, Model 0023-7356, or equivalent, may be used to verify the pressure integrity of system components during this test.

5.9 Leak Detection Solution. Any liquid solution designed to detect vapor leaks may be used to verify the pressure integrity of system components during this test.

6. PRE-TEST PROCEDURES

6.1 The following safety precautions shall be followed:

6.1.1 Only nitrogen shall be used to pressurize the system.

6.1.2 A one psig relief valve shall be installed to prevent the possible over-pressurizing of the storage tank.

6.1.3 A ground strap should be employed during the introduction of nitrogen into the system.

6.2 Failure to adhere to any or all of the following time and activity restrictions shall invalidate the test results:

6.2.1 There shall be no Phase I bulk product deliveries into or out of the storage tank(s) within the three (3) hours prior to the test or during performance of this test procedure.

6.2.2 There shall be no product dispensing within thirty (30) minutes prior to the test or during performance of this test procedure.

6.2.3 Upon commencement of the thirty minute “no dispensing” portion of this procedure, the headspace pressure in the tank shall be measured. If the pressure exceeds 0.50 inches H_2O, the pressure shall be carefully relieved in accordance with all applicable safety requirements. After the thirty minute “no dispensing” portion of this procedure, and prior to introduction of nitrogen, the headspace pressure shall again be lowered, if necessary, to less than 0.50 inches H_2O.

6.2.4 There shall be no Air to Liquid Volumetric Ratio Test (Test Procedure TP-201.5) conducted within the twenty-four (24) hour period immediately prior to this test.

6.3 Measure the gallons of gasoline present in each underground storage tank and determine the actual capacity of each storage tank from facility records. Calculate the ullage space for each tank by subtracting the gasoline gallonage present from the actual tank capacity. The minimum ullage during the test shall be 25 percent of the tank capacity or 500 gallons, whichever is greater. The total ullage shall not exceed 25,000 gallons.

6.4 For two-point Phase I systems, this test shall be conducted with the dust cap removed from the vapor coupler. This is necessary to determine the vapor tightness of the Phase I vapor poppet. See Section 6.7 if this test is to be conducted at the Phase I vapor coupler.

6.4.1 For coaxial Phase I systems, this test shall be conducted with the dust cap removed from the Phase I coupler. This is necessary to insure the vapor tightness of the Phase I vapor poppet.

6.4.2 Verify that the liquid level in the storage tank is at least four (4) inches above the highest opening at the bottom of the submerged drop tube.

6.5 If the Phase I containment box is equipped with a drain valve, the valve assembly may be cleaned and lubricated prior to the test. This test shall, however, be conducted with the drain valve installed and the manhole cover removed. See subsection 7.4.1 for further details regarding containment box drain valves.

6.6 If the test is to be conducted at a Phase II vapor riser, disconnect the dispenser end of one vapor recovery hose and install the "T" connector assembly (see Figure 3-1). Connect the nitrogen gas supply (do not use air) and the pressure measuring device to the "T" connector.

6.6.1 For those Phase II systems utilizing a dispenser mounted remote vapor check valve, the “T” connector assembly shall be installed on the vapor riser side of the check valve.

6.7 If this test is to be conducted at the Phase I vapor coupler on a two-point Phase I system, the procedures set forth in subsections 6.7.1 and 6.7.2 shall be successfully completed prior to testing. The static pressure integrity test shall not be conducted at the Phase I coupler at facilities equipped with coaxial Phase I systems.

6.7.1 Connect the Vapor Coupler Integrity Assembly to the Phase I vapor coupler. Connect the Vapor Coupler Test Assembly. Connect the nitrogen supply to the assembly and carefully pressurize the internal volume of the assembly to two (2.0) inches H_2O. Start the stopwatch. Record the final pressure after one minute.

6.7.2 If the pressure after one minute is less than 0.25 inches H_2O, the leak rate through the Phase I vapor poppet precludes conducting the static leak test at this location. If the pressure after one minute is greater than or equal to 0.25 inches H_2O, the static leak test may be conducted at this location. This criteria assures a maximum leak rate through the Phase I vapor poppet of less than 0.0004 cubic feet per minute.

6.7.3 Disconnect the Vapor Coupler Integrity Assembly from the Phase I vapor coupler. If the requirements of subsection 6.7.2 were met, connect the Vapor Coupler Test Assembly to the Phase I vapor coupler.

6.7.4 As an alternate to the requirements of subsections 6.7.1 through 6.7.3, leak detection solution may be used to verify the absence of vapor leaks through the Phase I vapor poppet on two-point Phase I systems. This alternative leak check is valid only for two-point Phase I systems in which tanks are manifolded. The manifold may be at the vent pipes. Pressurize the system to two (2) inches H_2O and use the leak detection solution to verify a zero leak (absence of bubbles) condition at one of the vapor poppets on the Phase I system.

6.8 All pressure measuring device(s) shall be bench calibrated using either a reference gauge or incline manometer. Calibration shall be performed at 20, 50, and 80 percent of full scale. Accuracy shall be within two percent at each of these calibration points. Calibrations shall be conducted on a frequency not to exceed 90 days.

6.9 Use the flowmeter to determine the nitrogen regulator delivery pressures which correspond to nitrogen flowrates of 1.0 and 5.0 CFM. These pressures define the allowable range of delivery pressures acceptable for this test procedure. Also record which regulator delivery pressure setting, and the corresponding nitrogen flowrate that will be used during the test. As an alternative, the flowmeter may be connected, in-line between the nitrogen supply regulator and Vapor Coupler Test Assembly, during the test.

6.10 Use Equation 9.2 to calculate the approximate time required to pressurize the system ullage to the initial starting pressure of two (2.0) inches H_2O. This will allow the tester to minimize the quantity of nitrogen introduced into those systems which cannot comply with the static leak standards.

6.11 Attach the Vapor Coupler Test assembly to the Phase I poppet or the "T" connector assembly to the Phase II vapor riser. Read the initial pressure of the storage tank and underground piping. If the initial pressure is greater than 0.5 inches H_2O, carefully bleed off the pressure, in accordance with all applicable safety procedures, in the storage tank and underground piping to less than 0.5 inches H_2O column.

7. TESTING

7.1 Open the nitrogen gas supply valve and set the regulator delivery pressure within the allowable range determined in Section 6.9, and start the stopwatch. Pressurize the vapor system (or subsystem for individual vapor return line systems) to **at least 2.2 inches H_2O** initial pressure. It is critical to maintain the nitrogen flow until the pressure stabilizes, indicating temperature and vapor pressure stabilization in the tanks. Check the test equipment using leak detecting solution or a combustible gas detector to verify that all test equipment is leak tight.

7.1.1 If the time required to achieve the initial pressure of two (2.00) inches H_2O exceeds twice the time derived from Equation 9.2, stop the test and use a liquid leak detector, or a combustible gas detector, to find the leak(s) in the system. Failure to achieve the initial starting pressure within twice the time derived from Equation 9.2 demonstrates the inability of the system to meet the performance criteria. Repair or replace the faulty component(s) and restart the test pursuant to Section 7.1.

7.2 Close and disconnect the nitrogen supply. Start the stopwatch when the pressure has decreased to the initial starting pressure of two (2.0) inches H_2O.

7.3 At one-minute intervals during the test, record the system pressure. After five minutes, record the final system pressure. See Table 3-I (or Equation 9.1) to determine the acceptability of the final system static pressure results. For intermediate values of ullage in Tables 3-I, linear interpolation may be employed.

7.4 If the system failed to meet the criteria set forth in Table 3-I (or Equation 9-2), repressurize the system and check all accessible vapor connections using leak detector solution or a combustible gas detector. If vapor leaks in the system are encountered, repair or replace the defective component and repeat the test. Potential sources of leaks include nozzle check valves, pressure/vacuum relief

valves, containment box drain valve assemblies, and plumbing connections at the risers.

7.4.1 If the facility fails to comply with the static leak test standards and the Phase I system utilizes a non-CARB-certified drain valve equipped containment box, which was installed prior to July 1, 1992, for which a CARB-certified replacement drain valve assembly is not marketed, the following two subsections shall apply:

7.4.1.1 The drain valve may be removed and the port plugged. Reset the system. If the facility complies with the static leak test standards under these conditions, the facility shall be considered complying with the requirements, provided that the manufacturer and model number of the containment box and the date of installation are submitted with the test results.

7.4.1.2 The criteria set forth in subsection 7.4.1.1 shall not apply after July 1, 1996.

7.5 After the remaining system pressure has been relieved, remove the "T" connector assembly and reconnect the vapor recovery hose, if applicable.

7.6 If the vapor recovery system utilizes individual vapor return lines, repeat the leak test for each gasoline grade. Avoid leaving any vapor return line open longer than is necessary to install or remove the "T" connector assembly.

7.7 If the containment box has a cover-actuated drain valve, repeat the test with the cover in place. In these cases clearly specify, on Form 3-1, which results represent the pressure integrity with and without the cover in place.

8. POST-TEST PROCEDURES

8.1 Use Table 3-I, or Equation 9.1 to determine the compliance status of the facility by comparing the final five-minute pressure with the minimum allowable final pressure.

9. CALCULATIONS

9.1 The minimum allowable five-minute final pressure, with an initial pressure of two (2.0) inches H_2O, shall be calculated as follows:

[Equation 9-1]

$$P_f = 2e^{\frac{-500.887}{V}} \quad \text{if } N = 1\text{-}6$$

$$P_f = 2e^{\frac{-531.614}{V}} \quad \text{if } N = 7\text{-}12$$

$$P_f = 2e^{\frac{-562.455}{V}} \quad \text{if } N = 13\text{-}18$$

$$P_f = 2e^{\frac{-593.412}{V}} \quad \text{if } N = 19\text{-}24$$

$$P_f = 2e^{\frac{-624.483}{V}} \quad \text{if } N > 24$$

Where:

N = The number of affected nozzles. For manifolded systems, N equals the total number of nozzles. For dedicated plumbing configurations, N equals the number of nozzles serviced by the tank being tested.

V = The total ullage affected by the test, gallons

P_f = The minimum allowable five-minute final pressure, inches H_2O

e = A dimensionless constant approximately equal to 2.718

2 = The initial starting pressure, inches H_2O

9.2 The minimum time required to pressure the system ullage from zero (0) to two (2.0) inches H_2O gauge pressure shall be calculated as follows:

$$t_2 = \frac{V}{[1522]F} \qquad \text{[Equation 9-2]}$$

Where:

t_2 = The minimum time to pressurize the ullage to two inches H_2O, minutes

V = The total ullage affected by the test, gallons

F = The nitrogen flowrate into the system, CFM

1522 = The conversion factor for pressure and gallons

9.3 If the policy of the local district requires an allowable tolerance for testing error, the minimum allowable five-minute final pressure, including testing error, shall be calculated as follows:

$$P_{f-E} = 2 - \left[1 + \left(\frac{E}{100}\right)\right]\left[408.9 - \left(P_f + 406.9\right)\right] \qquad \text{[Equation 9-3]}$$

Where:

$P_{f\text{-}E}$	=	The minimum allowable five-minute final pressure including allowable testing error, inches H_2O
E	=	The allowable testing error, percent
P_f	=	The minimum allowable five-minute final pressure calculated in Equations 9-1 or 9-2, inches H_2O
2	=	The initial starting pressure, inches H_2O
408.9	=	Atmospheric pressure plus the initial starting pressure, inches H_2O
406.9	=	Atmospheric pressure, inches H_2O

10. REPORTING

10.1 The calculated ullage and system pressures for each five-minute vapor recovery system test shall be reported as shown in Form 3-1. Be sure to include the Phase I system type (two-point or coaxial), the Phase II system type, whether the system is manifolded, and the one-minute pressures during the test.

Executive Order G-70-150-AE

TABLE 3-1

Pressure Decay Leak Rate Criteria
Initial Pressure of 2 inches of H_2O
Minimum Pressure After 5 Minutes, inches of H_2O

ULLAGE, GALLONS	NUMBER OF AFFECTED NOZZLES				
	01-06	07-12	13-18	19-24	> 24
500	**0.73**	**0.69**	**0.65**	**0.61**	**0.57**
550	0.80	0.76	0.72	0.68	0.64
600	**0.87**	**0.82**	**0.78**	**0.74**	**0.71**
650	0.93	0.88	0.84	0.80	0.77
700	**0.98**	**0.94**	**0.90**	**0.86**	**0.82**
750	1.03	0.98	0.94	0.91	0.87
800	**1.07**	**1.03**	**0.99**	**0.95**	**0.92**
850	1.11	1.07	1.03	1.00	0.96
900	**1.15**	**1.11**	**1.07**	**1.03**	**1.00**
950	1.18	1.14	1.11	1.07	1.04
1,000	**1.21**	**1.18**	**1.14**	**1.10**	**1.07**
1,200	1.32	1.28	1.25	1.22	1.19
1,400	**1.40**	**1.37**	**1.34**	**1.31**	**1.28**
1,600	1.46	1.43	1.41	1.38	1.35
1,800	**1.51**	**1.49**	**1.46**	**1.44**	**1.41**
2,000	1.56	1.53	1.51	1.49	1.46
2,200	**1.59**	**1.57**	**1.55**	**1.53**	**1.51**
2,400	1.62	1.60	1.58	1.56	1.54
2,600	**1.65**	**1.63**	**1.61**	**1.59**	**1.57**
2,800	1.67	1.65	1.64	1.62	1.60
3,000	**1.69**	**1.68**	**1.66**	**1.64**	**1.62**
3,500	1.73	1.72	1.70	1.69	1.67
4,000	**1.76**	**1.75**	**1.74**	**1.72**	**1.71**
4,500	1.79	1.78	1.77	1.75	1.74
5,000	**1.81**	**1.80**	**1.79**	**1.78**	**1.77**
6,000	1.84	1.83	1.82	1.81	1.80
7,000	**1.86**	**1.85**	**1.85**	**1.84**	**1.83**
8,000	1.88	1.87	1.86	1.86	1.85
9,000	**1.89**	**1.89**	**1.88**	**1.87**	**1.87**
10,000	1.90	1.90	1.89	1.88	1.88
15,000	**1.93**	**1.93**	**1.93**	**1.92**	**1.92**
20,000	1.95	1.95	1.94	1.94	1.94
25,000	**1.96**	**1.96**	**1.96**	**1.95**	**1.95**

Note: For manifolded Phase II Systems, the **"Number of Affected Nozzles"** shall be the total of all gasoline nozzles. For dedicated return configurations, the **"Number of Affected Nozzles"** shall be the total of those nozzles served by the tank being tested.

Form 3-1

Distribution:	Executive Order G-70-150-AE Exhibit 3 **Summary of Source Test Results**	Report No.: _____ Test Date: _____ Test Times: Run A: _____ Run B: _____ Run C: _____

Source Information		Facility Parameters
GDF Name and Address	GDF Representative and Title	PHASE I SYSTEM TYPE (Check One)
_____	_____	Two Point ☐
_____	_____	Coaxial ☐
_____	GDF Phone No. ( )	Coaxial with Spill Prevention
	Source: GDF Vapor Recovery System	PHASE II SYSTEM TYPE ☐
Permit Conditions	GDF # _____	VaporVac
	A/C # _____	Manifolded? Y or N

Operating Parameters:

Number of Nozzles Served by Tank #1	_____	Number of Nozzles Served by Tank #3	_____
Number of Nozzles Served by Tank #2	_____	Total Number of Gas Nozzles at Facility	_____

Applicable Regulations:

FOR OFFICE USE ONLY:

Source Test Results and Comments:

TANK #:	1	2	3	TOTAL
1. Product Grade				
2. Actual Tank Capacity, Gallons				
3. Gasoline Volume, Gallons				
4. Ullage, Gallons (#2 -#3)				
5. Phase I System Type				
6. Initial Test Pressure, Inches H_2O **(2.0)**				
7. Pressure After 1 Minute, Inches H_2O				
8. Pressure After 2 Minutes, Inches H_2O				
9. Pressure After 3 Minutes, Inches H_2O				
10. Pressure After 4 Minutes, Inches H_2O				
11. **Final Pressure After 5 Minutes, Inches H_2O**				
12. Allowable Final Pressure from Table 3-1				
13. Test Status [**Pass** or **Fail**]				

Test Conducted by:	Test Company Name _____ Address _____ City _____	Date and Time of Test:

EXECUTIVE ORDER G-70-150-AE

EXHIBIT 4

TEN GALLON PER MINUTE LIMITATION
COMPLIANCE VERIFICATION PROCEDURE

Compliance with the 10 gallon per minute flowrate limitation shall be determined with the following methodology. It is recommended that the maximum dispensing rate through each nozzle/hose assembly be verified. Maximum dispensing rates are achieved with no other dispensing occurring from the same submersible turbine pump (STP). Dispensing rates determined while conducting TP-201.5 are acceptable for verifying compliance with the 10 gallon per minute flowrate limitation.

1) The facility uses identical models of hoses, nozzles, and breakaways:

Dispense gas into a vehicle or approved container. Dispensing shall be conducted in the "hand-held, wide-open" mode. Using a stopwatch accurate to at least 0.2 seconds, begin timing the dispensing rate after at least one gallon has been dispensed. This one gallon buffer is necessary due to the "slow-start" nature of some dispensers. Determine the time required to dispense 2, 3, 4, or 5 gallons of gasoline. The facility shall be deemed in compliance with the 10 gallon per minute limitations if the elapsed time meets, or exceeds, the times shown in Table 1. If the dispensing rate exceeds the allowable limit, a CARB-certified flow limiting device shall be installed.

2) The facility uses different models of hoses, nozzles, or breakaways

Due to potential differences in pressure drops through the various components, each of the nozzle/hose assemblies shall be tested for maximum dispensing rates. Using the same criteria as above, determine the maximum dispensing rate through each nozzle/hose assembly. If the maximum dispensing rate exceeds the 10 gpm limit, a CARB-certified flow limiting device shall be installed.

Table 1
Verification of 10 gpm

Product Dispensed, gallons	Minimum Allowable Time, seconds
2.0	11.8
3.0	17.7
4.0	23.6
5.0	29.5

Note: The times have been corrected to allow for the accuracy of the measurement.