Executive Order G-70-153-AC

Exhibit 2

Figure 2D

Installation of the A/L Adaptor

Exclude Shut-off Port: Note that the o-ring has isolated the shut-off port from the vapor holes

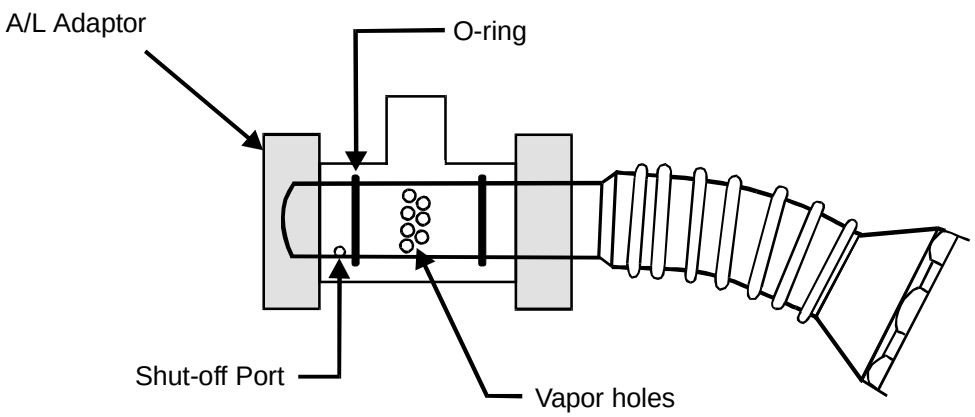
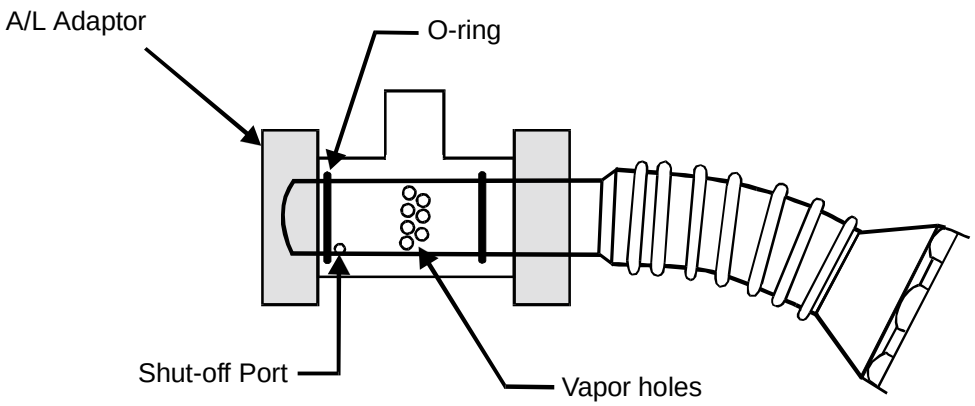
Include Shut-off Port: Note that the o-ring includes the shut-off port with the vapor holes