California Environmental Protection Agency
AIR RESOURCES BOARD

Executive Order G-70-153-AC

Modification to the Certification of the Dresser/Wayne WayneVac Phase II Vapor Recovery System

WHEREAS, the California Air Resources Board ("the Board" or "CARB") has established, pursuant to California Health and Safety Code sections 39600, 39601 and 41954, certification procedures for systems designed for the control of gasoline vapor emissions during motor vehicle fueling operations (Phase II vapor recovery systems) in its "CP-201 Certification Procedure for Vapor Recovery Systems of Dispensing Facilities" (the "Certification Procedures") as last amended April 12, 1996, incorporated by reference into Title 17, California Code of Regulations, Section 94011;

WHEREAS, the Board has established, pursuant to California Health and Safety Code sections 39600, 39601 and 41954, test procedures for determining the compliance of Phase II vapor recovery systems with emission standards in its "Certification and Test Procedures for Vapor Recovery Systems," CP-201.1 through CP-201.6 ("the Test Procedures") as adopted April 12, 1996, incorporated by reference into Title 17, California Code of Regulations, Section 94011;

WHEREAS, Dresser Industries, Wayne Division ("Wayne"), requested and was granted certification of the WayneVac Phase II vapor recovery system ("WayneVac system") pursuant to the Certification and Test Procedures on November 12, 1993, by Executive Order G-70-153, and was granted modifications to the certification by Executive Orders G-70-153-AA, issued July 14, 1994 and G-70-153-AB, issued August 1, 1996;

WHEREAS, Modification of the WayneVac certification was necessary to include a design change for the Husky Model V34 6250 nozzle, the Catlow ICVN nozzle, the Richards Astrovac nozzle and the use of suction pumps for delivering fuel;

WHEREAS, the modification to the certification of the WayneVac system has been evaluated pursuant the Board's Certification Procedures;

WHEREAS, the Certification Procedures (CP-201) provides that the Executive Officer shall issue an order of certification if he or she determines that the vapor recovery system conforms to all of the applicable requirements set forth in the Certification Procedures;

WHEREAS, I, Michael P. Kenny, Air Resources Board Executive Officer, find that the WayneVac system conforms with all the requirements set forth in the Certification Procedures, and results in a vapor recovery system which is at least 95 percent effective for attendant and/or self-serve use at gasoline service stations when used in conjunction with a Phase I vapor recovery system which has been certified by the Board and meets the requirements contained in Exhibit 2 of this Order.

NOW, THEREFORE, IT IS HEREBY ORDERED that the WayneVac system when used with a CARB-certified Phase I system, as specified in Exhibits 1 and 2 of this Order, is certified to be at least 95 percent effective in attended and/or self-serve mode. **Compatibility of this system with the onboard vapor recovery systems ("ORVR") has not been evaluated to determine the emissions impact. Fugitive emissions which may occur when the underground storage tanks are under positive pressure have not been quantified and were not included in the calculation of system effectiveness.** Exhibit 1 contains a list of the equipment certified for use with the WayneVac system. Exhibit 2 contains installation and performance specifications for the system. Exhibit 3 contains a procedure for testing the static pressure integrity of the underground storage tank. Exhibit 4 contains a procedure for verifying dispensing rate.

IT IS FURTHER ORDERED that the dispensing rate for installations of the WayneVac system shall not exceed ten (10.0) gallons per minute when only one nozzle associated with the product supply pump is operating. This is consistent with the flowrate limitation imposed by United States Environmental Protection Agency as specified in the Federal Register, Volume 58, Number 55, page 16019. Dispensing rate shall be verified as specified in Exhibit 4.

IT IS FURTHER ORDERED that compliance with the certification requirements and rules and regulations of the Division of Measurement Standards of the Department of Food and Agriculture, the State Fire Marshal's Office, and the Division of Occupational Safety and Health of the Department of Industrial Relations is made a condition of this certification.

IT IS FURTHER ORDERED that the following requirements are made a condition of certification. The WayneVac system shall be installed only in facilities which are capable of demonstrating on-going compliance with the vapor integrity requirements contained in Exhibit 3 of this Order. The owner or operator of the installation shall conduct, and pass, a Static Pressure Decay test as specified in Exhibit 3, no later than 60 days after startup and at least once in each twelve month period. The owner or operator of the installation shall conduct, and pass, an Air-to-Liquid Ratio test as specified in TP-201.5 no later than 60 days after startup and at least once in each twelve month period thereafter. The test results shall be made available to the local air pollution control or air quality management district upon request within fifteen days after the tests are conducted, or within fifteen days of the request. Alternative test procedures may be used if determined by the Executive Officer, in writing, to yield comparable results.

IT IS FURTHER ORDERED that the WayneVac system, as installed, shall comply with the procedures and performance standards the test installation was required to meet during certification testing. If, in the judgment of the Executive Officer, a significant fraction of installations fail to meet the specifications of this certification, or if a significant portion of the vehicle population is found to have configurations which significantly impair the system's collection efficiency, the certification itself may be subject to modification, suspension or revocation.

IT IS FURTHER ORDERED that the certified WayneVac system shall, at a minimum, be operated in accordance with the manufacturer's recommended maintenance intervals and shall use the manufacturer's recommended operation, installation, and maintenance procedures.

IT IS FURTHER ORDERED that all nozzles approved for use with the WayneVac system shall be 100 percent performance checked at the factory, including checks of the integrity of the vapor and liquid path, as specified in Exhibit 2 of this Order, and of the proper functioning of all automatic shut-off mechanisms.

IT IS FURTHER ORDERED that each vapor pump shall be adjusted and 100 percent performance checked at the factory, including verification that the pump performance is within the range specified in Exhibit 2 of this Order.

IT IS FURTHER ORDERED that the certified WayneVac system shall be performance tested during installation for ability to dispense gasoline and collect vapors without difficulty, in the presence of the station manager or other responsible individual. Dresser/Wayne shall provide, to the station owner, operator or designee, CARB-approved copies of the installation and maintenance manuals along with instructions in the proper use of the WayneVac system, its repair and maintenance schedule, and where system and/or component replacements can be readily obtained, which are to be stored at the facility. Revisions to the manual are subject to approval by CARB.

IT IS FURTHER ORDERED that the certified WayneVac system shall be warranted by Dresser/Wayne, in writing, for at least one year, to the ultimate purchaser and each subsequent purchaser, that the vapor recovery system is designed, built and equipped so as to conform at the time of original installation or sale with the applicable regulations and is free from defects in materials and workmanship which would cause the vapor recovery system to fail to conform with applicable regulations. Dresser/Wayne shall provide copies of the manufacturer's warranty for the WayneVac system to the station manager, owner or operator. Hoses, nozzles and breakaway couplings shall be warranted to the ultimate purchaser as specified above for at least one year, or for the expected useful life, whichever is longer.

IT IS FURTHER ORDERED that any alteration of the equipment, parts, design, or operation of the systems certified hereby is prohibited, and deemed inconsistent with this certification, unless such alteration has been approved by the Executive Officer or his/her designee.

IT IS FURTHER ORDERED that the WayneVac certification Executive Order G-70-153-AB, issued August 1, 1996 is hereby superseded by this Executive Order.

Executed at Sacramento, California, this 11 day of August, 1997.

Michael P. Kenny
Executive Officer

Attachments

Executive Order G-70-153-AC

Exhibit 1

WayneVac System Equipment List

Component	Manufacturer / Model	State Fire Marshal Identification Number
Nozzles		
	OPW 11VAI-xx (with vapor valve and Efficiency Compliance Device (ECD)) xx = 64 (15/16" OD spout, hold open latch (HOL)) 69 (13/16" OD spout, HOL) 84 (15/16" OD spout, no HOL) 89 (13/16" OD spout, no HOL) See Figure 1A-1	005:008:050
	Husky V34 Model 6200-4 (with vapor valve and VEG) See Figure 1A-2	005:021:008
	Husky V34 Model 6200 (with vapor valve and Vapor Splash Guard (VSG)) See Figure 1A-3	005:021:008
	Husky V34 Model 6250 (with vapor valve and (VSG)) See Figure 1A-4	005:021:008
	Emco Wheaton A4505 (with vapor valve and Vapor Guard) See Figure 1A-5	005:007:042
	Catlow ICVN (with vapor valve and ECD) See Figure 1A-6	005:030:014
	Richards Astrovac (with vapor valve and ECD) See Figure 1A-7	005:031:018
Splash Guards	Splash guards are optional but, if used, must be the guards listed for use with the nozzle. Splash guards shall be installed so they do not interfere with the operation of the VEG or VSG units.	

Component	Manufacturer / Model	State Fire Marshal Identification Number
Inverted Coaxial Hoses		
	Catlow Vapor Mate	005:033:005
	Dayco 7282 Superflex 2000	005:033:005
	Dayco 7292 Superflex 4000	005:033:006
	Dayco 7246 Flex-Ever Ultimate	005:033:007
	Goodyear Flexsteel	005:036:002
	GT Sales/Hewitt Superflex 2000	005:033:005
	Thermoid Hi-Vac	005:037:003
	Thermoid Hi-Vac S	005:037:004
	VST VSTaflex	005:052:001
	VST VST-CIS	005:052:001
	OR Any inverted coaxial hose which is CARB-certified for use with the WayneVac system	
Breakaway Couplings	**With A Vapor Poppet**	
	Catlow AV2001 (reconnectable)	005:030:006
	Catlow AVR200S (reconnectable)	005:030:010
	Emco Wheaton A5219-001 (reconnectable)	005:030:010
	Husky 4034 (reconnectable)	005:021:009
	OPW 66CIP (reconnectable)	005:030:010
	OPW 66CAS	005:008:056
	Richards VA-50 (reconnectable)	005:031:007
	Richards VA-50B (reconnectable)	005:031:014
	Richards VA-60	005:031:009
	VST-IS-SBK	005:044:008
	VST-H-SBK	005:044:008
	OR Any inverted coaxial breakaway with a vapor valve which is CARB-certified for use with the WayneVac system.	
Breakaway Couplings	**Without A Vapor Poppet** **(Note: These shall not be used after August 1, 2000.)**	
	Catlow AV200	005:030:005
	Catlow AV200-1	005:030:005
	Emco Wheaton A5019-001	005:030:005
	OPW 66CI	005:030:005
	Richards VA-51 (reconnectable)	005:031:007
	Richards VA-61	005:031:009

Component	Manufacturer / Model	State Fire Marshal Identification Number
Breakaway/Hose Combinations		
	VST-IS-BK (Breakaway includes a vapor poppet.)	005:044:004
	OR Any inverted coaxial breakaway/hose combination with a vapor valve which is CARB-certified for use with the WayneVac system.	
Swivels		
	OPW Model 43-IS	005:008:057
	Richards MFVA	005:031:015
	OR Any inverted coaxial swivel which is CARB-certified for use with the WayneVac system.	
Breakaway/Swivel Combinations		
	Richards STVA (Breakaway includes a vapor poppet.)	005:031:016
	OR Any inverted coaxial breakaway/swivel combination with a vapor valve which is CARB-certified for use with the WayneVac system.	
Flow Control Units		
	Catlow I10G-1A	005:030:013
	Healy 1301M	005:027:020
	Healy 1302M	005:027:020
	Husky 5837	005:021:012
	OPW 66FL	005:008:054
	OPW 66FD	005:008:054
	Richards FRVAD	005:031:017
	Vapor Systems Technologies (VST)	005:044:001
	OR Any inverted coaxial flow control unit which is CARB-certified for use with the WayneVac system.	
Breakaway/Flow Control Unit Combinations		
	OPW 66FLB (Breakaway includes a vapor poppet.)	005:008:055
	OR Any inverted coaxial breakaway/flow control unit combination with a vapor valve which is CARB-certified for use with the WayneVac system.	

Component	Manufacturer / Model	State Fire Marshal Identification Number
Pressure/Vacuum Valves	OPW 523LP, 523LPS (settings as specified below)	005:008:051
	Hazlett H-PVB-1 Gold label (settings as specified below)	005:017:004
	Morrison Brothers 749CRB0600 AV (settings as specified below)	005:041:001
	OR Any CARB-certified valve with the following pressure and vacuum settings, in inches water column (wc): Pressure: three plus or minus one-half inches (3.0 ± 0.5") water column. Vacuum: eight plus or minus two inches (8 ± 2") water column. Note: For systems installed before August 31, 1994, a valve with the following settings may be used until September 1, 1998. Local districts may require earlier replacement of these valves. Pressure: at least one and not exceeding three and one-half inches (1 - 3.5") water column. Vacuum: at least one-half ounce/inch^2 (0.87") water column.	
Vapor Pump	Thomas Industries positive displacement vane pump/motor Model Number: VF-0020/991139	005:055:001
	OR Any vapor pump which is CARB-certified for use with the WayneVac system.	
Dispensers	Vista Series Dispensers: prefix/Vxxxyz/suffix "prefix" = any number or letter V = V (Vista) “x” = any digit “y” = D or P D designates remote dispenser type for delivering fuel P designates suction pump for delivering fuel “z” = 1,3, 4, 5, or 6 “suffix” = D1 or D2, and any combination of number(s) or letter(s)	005:019:001

Component	Manufacturer / Model	State Fire Marshal Identification Number
WayneVac Retrofit Kits	#918645 (WayneVac kit) to be used WITH either #918643 (tubing kit for non-vapor dispenser) OR #918644 (tubing kit for Balance-ready dispenser) KITS SHALL BE USED ONLY WITH: Vista-series dispensers (same as above except no D1/D2 suffix), OR Non-Vista dispensers: dxy/a9c-ef "d" = D (non-Vista), "9" = 9, "-" = - "x" = D, S, T, L, V "y" = 1 through 6 "a" = 3, 4 or 5 "c" = 0, 5 or 9 "e" = 1, 2 or 3 "f" = L or 3	
	WayneVac Retrofit x-918726-KIT "x" = 1 or 2	005:019:003
Phase I Adaptors	Any CARB-certified device which prevents loosening or overtightening of the Phase I product and vapor adaptors. <u>Note</u>: For systems installed before two CARB-certified devices which prevent loosening or overtightening of the Phase I product and vapor adaptors are available, or within sixty days after that date, any CARB-certified Phase I product adaptor may be used for a period not to exceed four years from the date the second device was certified.	

Executive Order G-70-153-AC

Exhibit 2

Specifications for the WayneVac Bootless Nozzle System

Figures 2A-1 through 2A-5 contain drawings of a typical installation of the WayneVac system. Figure 2B depicts the dispenser and hose configurations of the WayneVac system. Figure 2C depicts instructions on conducting air-to-liquid ratio testing with the Husky V34 6250 nozzle and the WayneVac system.

Nozzles

1. **OPW 11VAI and Husky V34 6200-4**
   A Vapor Escape Guard (VEG) shall be installed on the OPW 11VAI and Husky V34 6200-4 nozzles at the base of the spout, as shown in Figure 1A-1 and 1A-2. Any OPW 11VAI or Husky V34 6200-4 nozzle with a VEG which is missing, or which is damaged such that at least one-eighth (1/8) of the circumference is missing, or which has cumulative damage equivalent to at least 1/8 of the circumference missing, is defective and shall be immediately removed from service.

2. **OPW 11VAI**
   The OPW 11VAI nozzle may use either an aluminum spout or a stainless steel spout. The aluminum spout has a total of 12 vapor recovery holes while the stainless steel spout has a total of 18 vapor recovery holes. Figure 1A-1 shows a typical 11VAI nozzle with an aluminum spout configuration.

3. **Husky V34 6200 and V34 6250**
   A Vapor Splash Guard (VSG) shall be installed on the Husky V34 6200 and V34 6250 nozzles at the base of the spout, as shown in Figures 1A-3 and 1A-4.

   - Damaged or Missing VSG
     Any Husky V34 6200 and V34 6250 nozzle with a VSG which is missing, or which is damaged such that at least a one and one-half (1.5) inch slit has developed, or which has cumulative damage equivalent to at least a 1.5 inch slit, is defective and shall be immediately removed from service.

   - Holes in VSG
     Any Husky V34 6200 and V34 6250 nozzle which is damaged such that greater than a three-eighths (3/8) inch hole has developed, or which has cumulative damage greater than a 3/8 inch hole, is defective and shall be immediately removed from service. Nozzles installed and in service prior to the issue date of this Executive Order may have a VSG with one one-eighth (1/8) inch hole, or may be modified to have four (4) three-sixteenth (3/16) inch holes, which are equivalent to in area to a 3/8 inch hole.

   - Compression of VSG
     Any Husky V34 6200 and V34 6250 nozzle which has a VSG compressing more than one-half (0.5) inches when a compression force of at least 1.5 pounds is applied is defective and shall be immediately removed from service. (Note: do not include the compression length of the VSG "flange".)

4. **Emco Wheaton A4505**
A Vapor Guard (VG) shall be installed on the Emco Wheaton A4505 nozzle at the base of the spout, as shown in Figure 1A-5. Any Emco Wheaton A4505 nozzle with a VG which is damaged such that at least one-eighth (1/8) of the circumference is missing, or which has cumulative damage equivalent to at least 1/8 of the circumference missing, is defective and shall be immediately removed from service.

5. **Catlow ICVN and Richards Astrovac**
An Efficiency Compliance Device (ECD) shall be installed on the Catlow ICVN nozzle and Richards Astrovac nozzle at the base of the spout, as shown in Figures 1A-6 and 1A-7. Any Catlow ICVN or Richards Astrovac nozzle with an ECD which is damaged with a slit from the base to the rim, is defective and shall be immediately removed from service

6. Failure mode testing demonstrated that blockage of some of the vapor collection holes in the spout of the nozzle has negligible effect on the operation of the system until the number of unblocked holes is less than required below. The Husky V34 6250 nozzle uses a solid spout design which does not have any vapor collection holes on the tip of the spout. Gasoline vapors are directed to the base of the spout by the VSG where they can be collected by the WayneVac system.

Nozzle	Minimum Number of Unblocked Vapor Holes Required
OPW 11VAI	2
Husky V34 6200-4	2
Husky V34 6200	2
Husky V34 6250	N/A
Emco Wheaton A4505	3
Catlow ICVN	3
Richards Astrovac	3

Any nozzle which is found to have fewer unobstructed vapor collection holes than are required is defective and shall be immediately removed from service.

7. The nozzles shall have an integral vapor valve which prevents the loss of vapor from the underground storage tanks, ensures proper operation of the system and prevents the ingestion of air into the system when another nozzle which is connected to the same vapor pump is used. Any nozzle with a defective vapor valve will substantially impair the effectiveness of the other nozzles associated with the same vapor pump. Therefore, any nozzle with a defective vapor valve, and all nozzles at the same fueling point (dispenser side), shall be immediately removed from service and the vapor path shall be closed as soon as practicable.

NOTE: A defective vapor valve will also impair the integrity of the system and may result in vapor loss from or air ingestion into the underground storage tank.

8. Nozzles shall be 100 percent performance checked at the factory, including checks of all shutoff mechanisms and of the integrity of the vapor path. The maximum allowable leak rate for the nozzle shall not exceed the following:

0.038 CFH at a pressure of two inches water column (2" wc), and
0.005 CFH at a vacuum of twenty seven inches water column (approx. 1 psi).

9. Leaded and unleaded spouts are interchangeable.

10. Sealing of the vapor holes on the nozzle spout (such as placing a balloon or the fingers of a glove over the holes on the nozzle spout, or bagging nozzles) is not permitted during static pressure decay tests. Sealing of the nozzle vapor holes during a static pressure decay test may mask a defective vapor valve.

Dispensing Rate

1. The dispensing rate for installations of the WayneVac system shall not exceed 10.0 gallons per minute when only one nozzle associated with the product supply pump is operating. This shall be determined as specified in Exhibit 4.

Inverted Coaxial Hoses

1. The length of hose which may be in contact with the island and/or ground when the nozzle is properly mounted on the dispenser is limited to six inches (6").

2. The hose configuration shall comply with Figure 2B-1; there may be 1 to 4 hoses on each side of the dispenser. Within the constraints of the configurations, the maximum length of the hose shall be fifteen feet (15').

Breakaway Couplings

1. Breakaway couplings are optional but, if installed, only CARB-certified breakaways may be used. CARB-certified breakaway couplings which do not close the vapor path and are listed in Exhibit 1 of this Executive Order may only be used until 4 years following the date of signature of this Executive Order.

2. The following section does not apply to breakaways that contain a valve which closes the vapor path when it is separated. Operation of the system, when a breakaway coupling is separated, will substantially reduce the effectiveness of the other nozzles at that fueling point (dispenser side). Separated breakaways shall be recoupled, or the vapor path plugged, as soon as possible. Other nozzles at the fueling point shall not be used when such a breakaway is separated.

   NOTE: A separated breakaway will also impair the integrity of the system and may result in vapor loss from or air ingestion into the underground storage tanks.

Pressure/Vacuum Valves for Storage Tank Vents

1. A pressure/vacuum (P/V) valve shall be installed on each tank vent. Vent lines may be manifolded to minimize the number of P/V valves and potential leak sources, provided the manifold is installed at a height not less than 12 feet above the driveway surface used for Phase I tank truck filling operations. At least one P/V valve shall be installed on manifolded vents. If two P/V valves are desired, they shall be installed in parallel, so that each can serve as a backup for the other if one should fail to open properly. The P/V valve shall be a CARB-certified valve as specified in Exhibit 1. The outlets shall vent upward and be located to eliminate the possibility of vapor accumulating or traveling to a source of ignition or entering adjacent buildings.

2. The P/V valve is designed to open at a pressure of approximately three inches water column (3" wc). Storage tank pressure which exceeds 3" wc for more than a short time may indicate a malfunctioning pressure/vacuum vent valve.

WayneVac System

1. The A/L ratio of the system measured at a flowrate between seven and ten gallons per minute (7 - 10 gpm), shall be within the values listed in the following table. Any fueling point not capable of demonstrating compliance with this performance standard shall be deemed defective and removed from service. The A/L ratio shall be determined by using the CARB-approved procedure TP-201.5. Alternative test procedures may be used if they are determined by the Executive Officer, in writing, to yield comparable results. Figure 2F and illustrates the correct configuration for including or excluding the shut-off port. Husky shall provide instructions on how to conduct A/L testing similar to the instructions listed in Figure 2E.

Nozzle	Shut-off Port	A/L Installation	A/L Ratio
OPW VAI	excluded	Figure 2F	**0.90 to 1.10**
Husky V34 6200-5	included	Figure 2F	
Husky V34 6200	included	Figure 2F	
Husky V34 6250	excluded	Figure 2E	
Emco Wheaton	excluded	Figure 2F	
Catlow ICVN	excluded	Figure 2F	
Richards Astrovac	excluded	Figure 2F	

The exclusion of the liquid shutoff port will decrease the A/L ratios. This decrease is a function of the flowrate below:

Flowrate (gpm)	A/L Ratio Decrease
7.0	0.04
8.0	0.03
10.0	0.02

NOTE: This test procedure returns air rather than vapor to the storage tank, and normally causes an increase in storage tank pressure which may result in vent emissions. This is a temporary condition due to the test and should not be considered an indication of malfunction or noncompliance.

2. The WayneVac system shall be equipped with electronic safeguards designed to ensure that no fuel is dispensed if the vapor pump motor fails. Malfunction of the vapor pump motor is indicated when more than 1/2 power is applied for over 10 seconds with no rotation detected. This condition shall cause the dispenser computer to recognize an error and shut down the dispenser and display an appropriate error message.

3. The vapor inlet of the WayneVac Thomas Industries vapor pump includes an inlet filter screen to help prevent the ingestion of small particles of debris from entering the vapor pump and causing it to bind. The inlet filter screen is constructed of a stainless steel 40 wire mesh material and may consist of a thumbnail, basket, concave, or flat style design.

4. The WayneVac system may include a thermostat unit which activates at 0 degrees Celsius. The thermostat unit allows the vacuum pump to cycle continuously when the dispenser is not in use. This keeps the vapor pump from becoming frozen in a cold

environment. The thermostat is installed into one of the WayneVac's pulser conduits that enters the electronic head through the dispenser vapor barrier or into the splice box on the vacuum pump motor. The temperature at the bottom of the pulser conduit or splice box is approximately ambient temperature. The thermostat wires are connected to a control board jumper connection. When the thermostat closes at around 0 degrees Celsius, the software activates the vacuum pump motor to cycle continuously forward and backward. When the temperature goes above freezing, the thermostat opens and the system goes back to normal operation.

Vapor Recovery Piping Configurations

1. The recommended maximum pressure drop through the system, measured at a flow rate of 60 SCFH with dry Nitrogen gas, is 0.05 inches water column. The maximum allowable pressure drop through the system shall never exceed one/half inch (0.5") water column at 60 SCFH. The pressure drop shall be measured from the dispenser riser to the UST with pressure/vacuum valves installed and with the poppeted Phase I vapor connection open.

   Note: The A/L test may be used to verify proper operation of the system, in lieu of measuring the pressure drop through the lines, provided that at least two gallons of product is introduced into the system at the termination of the vapor return lines, prior to the test.

2. All vapor return lines shall slope a minimum of 1/8 inch per foot. A slope of 1/4 inch or more per foot is recommended wherever feasible.

3. The dispenser shall be connected to the riser with either flexible or rigid material which is listed for use with gasoline. The dispenser-to-riser connection shall be installed so that any liquid in the lines will drain toward the UST. The internal diameter of the connector, including all fittings, shall be not less than three-fourths inch (3/4").

4. All vapor return and vent piping shall be installed in accordance with the manufacturer's instructions and all applicable regulations.

5. No product shall be dispensed from any fueling point associated with a vapor line which is disconnected and open to the atmosphere. If vapor lines are manifolded, this includes all fueling points in the facility.

6. The recommended nominal inside diameter of the underground Phase II plumbing is as indicated in Figures 2A-1 through 2A-5. Smaller vapor lines are not recommended but may be used provided the pressure drop criteria specified above are met. The vapor return lines shall be manifolded below grade at the tanks as indicated in the figures.

   Exception: For installations with a vapor return line directly to only one tank, and for which a manifold on the tank vents will be used to provide part of the vapor return path to other tanks, the vent manifold may be used as an alternative to the underground manifold <u>only</u> in existing installations where the vapor piping is already installed, and shall not be used in "new" installations where vapor piping is being installed. For installations with dedicated vapor piping directly to each tank, the vent manifold is approved for both new and existing installations and an additional tank manifold below grade is optional but not required.

Phase I System

WARNING: Phase I fill caps should be opened with caution because the storage tank may be under pressure.

1. The Phase I system shall be a CARB-certified system which is in good working order and which demonstrates compliance with the static pressure decay test criteria contained in Exhibit 3 of this Order. Coaxial Phase I systems shall not be used with new installations of the system. Replacement of storage tanks at existing facilities, or modifications which cause the installation of new or replacement Phase I vapor recovery equipment, are considered new installations with regard to this prohibition. An exception to this prohibition may be made for coaxial Phase I systems CARB-certified after January 1, 1994, as compatible for use with Phase II systems which require pressure/vacuum vent valves. Where installation of the WayneVac system is made by retrofitting previously installed equipment, local districts may elect to allow existing coaxial Phase I systems to remain in use for a specifically identified period of time provided the following conditions are met:

    - the existing coaxial Phase I system is a poppeted, CARB-certified system capable of demonstrating compliance with the static pressure decay test as specified above; and

    - installation of the Phase II system requires no modification of the UST(s) and/or connections.

2. Spill containment manholes which have drain valves shall demonstrate compliance with the static pressure decay criteria with the drain valves installed as in normal operation. Manholes with cover-actuated drain valves shall not be used in new installations (as defined above). Manholes with cover-actuated drain valves may remain in use in facilities where installation of the WayneVac system does not require modification of the tank fittings provided the facility demonstrates compliance with static pressure decay test criteria both with the cover open and with the cover closed.

3. The Phase I vapor recovery system shall be operated during product deliveries so as to minimize the loss of vapors from the facility storage tank which may be under pressure. Provided it is not in conflict with established safety procedures, this may be accomplished in the following manner:

    - the Phase I vapor return hose is connected to the delivery tank and to the delivery elbow before the elbow is connected to the facility storage tank;

    - the delivery tank is opened only after all vapor connections have been made, and is closed before disconnection of any vapor return hoses; and

    - the vapor return hose is disconnected from the facility storage tank before it is disconnected from the delivery tank.

4. Phase I deliveries shall be accomplished so as to ensure that there is at least one vapor connection between the cargo tank compartment headspace and the storage tank associated with the product delivery. There shall be no more than two product hoses used with one with one vapor hose connected, and no more than three product hoses used with two vapor hoses connected.

5. Storage tank vent pipes, and fill and vapor and manhole tops, shall be maintained white, silver or beige. Colors which will similarly prevent heating of the system due to solar gain may also be used, provided they are listed in EPA AP-42 as having a factor the same as or better than that of the colors listed above. Existing facilities which were installed before April 1, 1996, must be in compliance with this requirement no later than January 1, 1998. Manhole covers which are color coded for product identification are exempted from this requirement.

Executive Order G-70-153-AC

Exhibit 1

Figure 1A-1

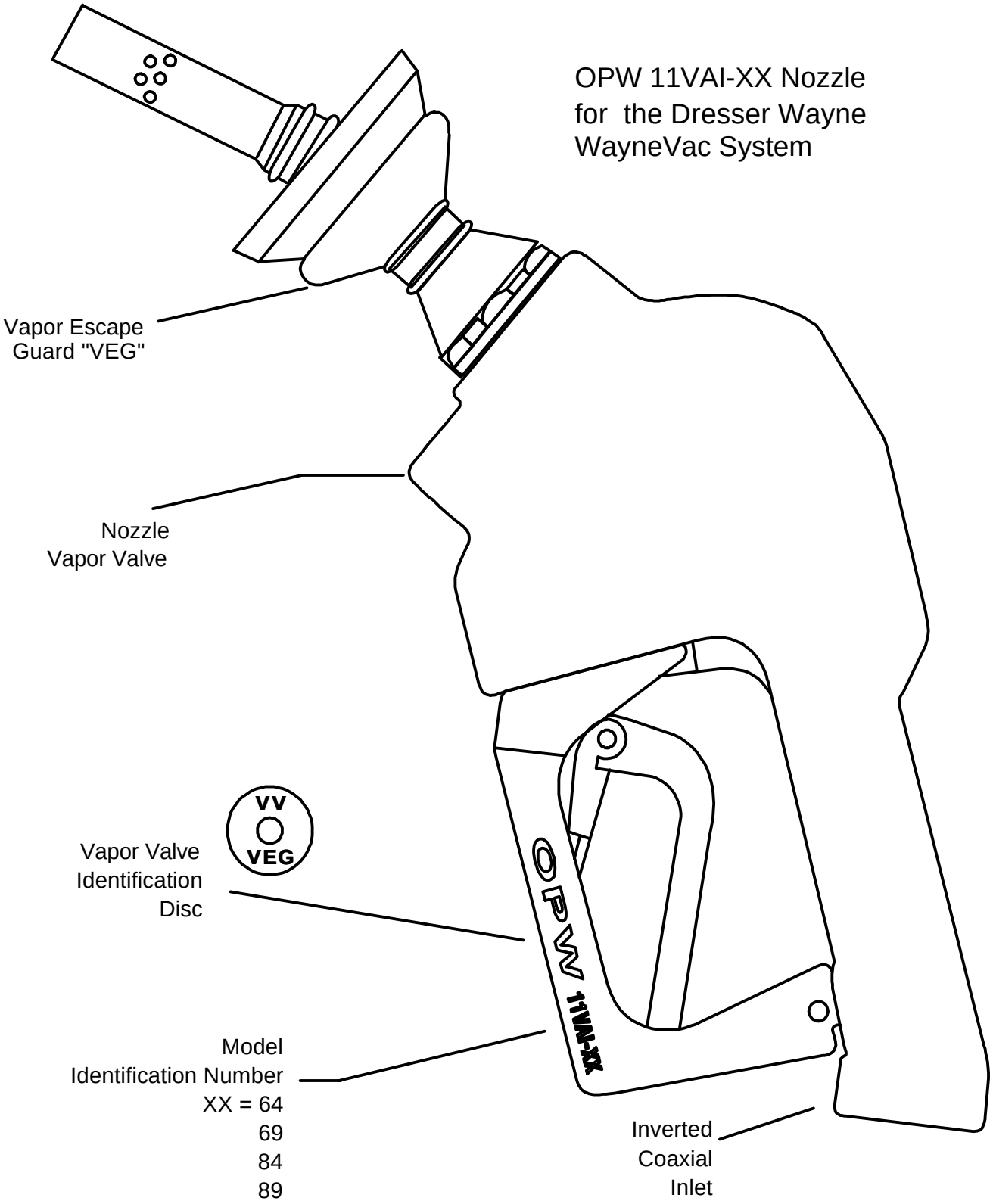

Executive Order G-70-153-AC

Exhibit 1

Figure 1A-2

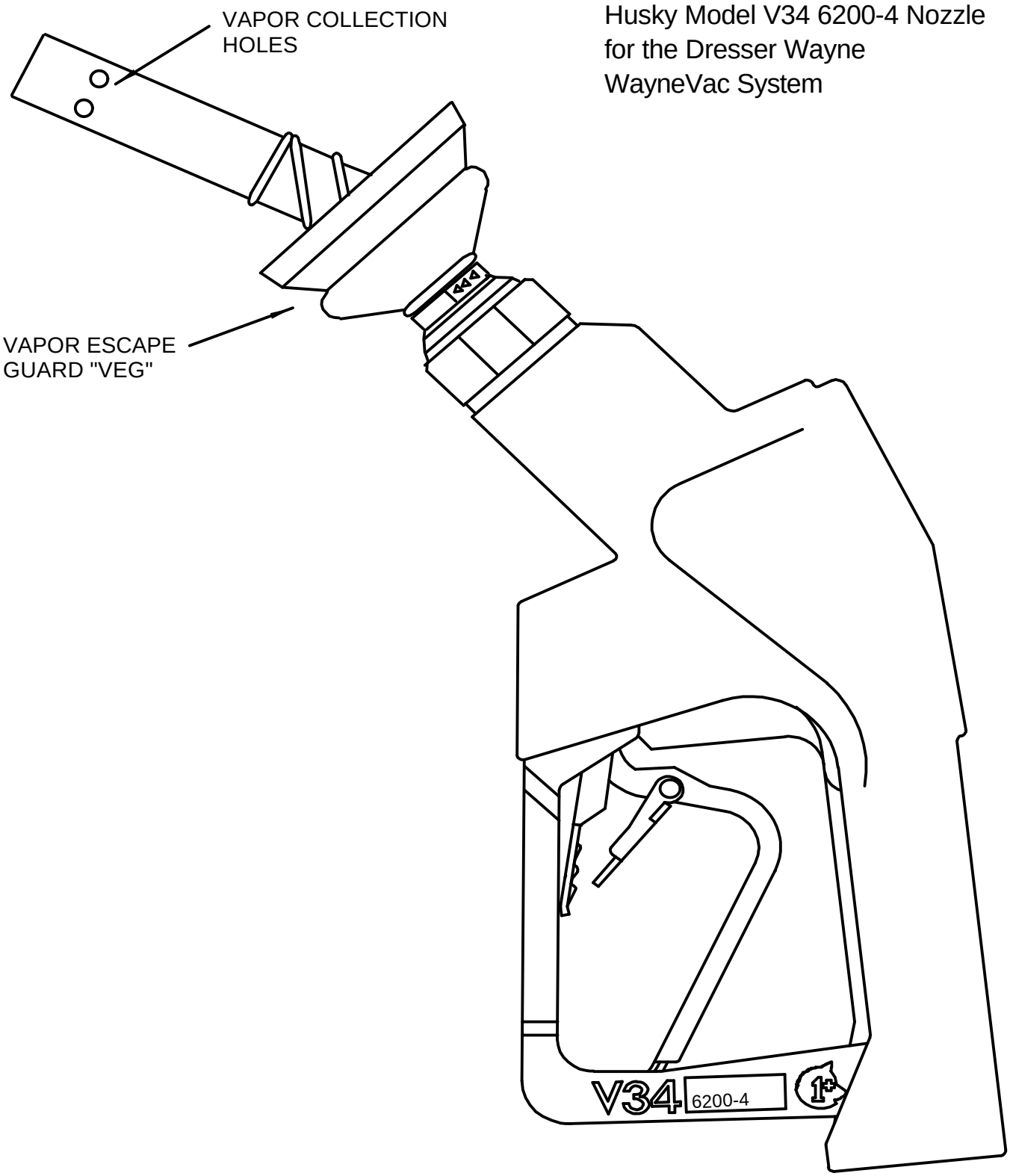

Executive Order G-70-153-AC

Exhibit 1

Figure 1A-3

Husky Model V34 6200 Nozzle for the Dresser Wayne WayneVac System

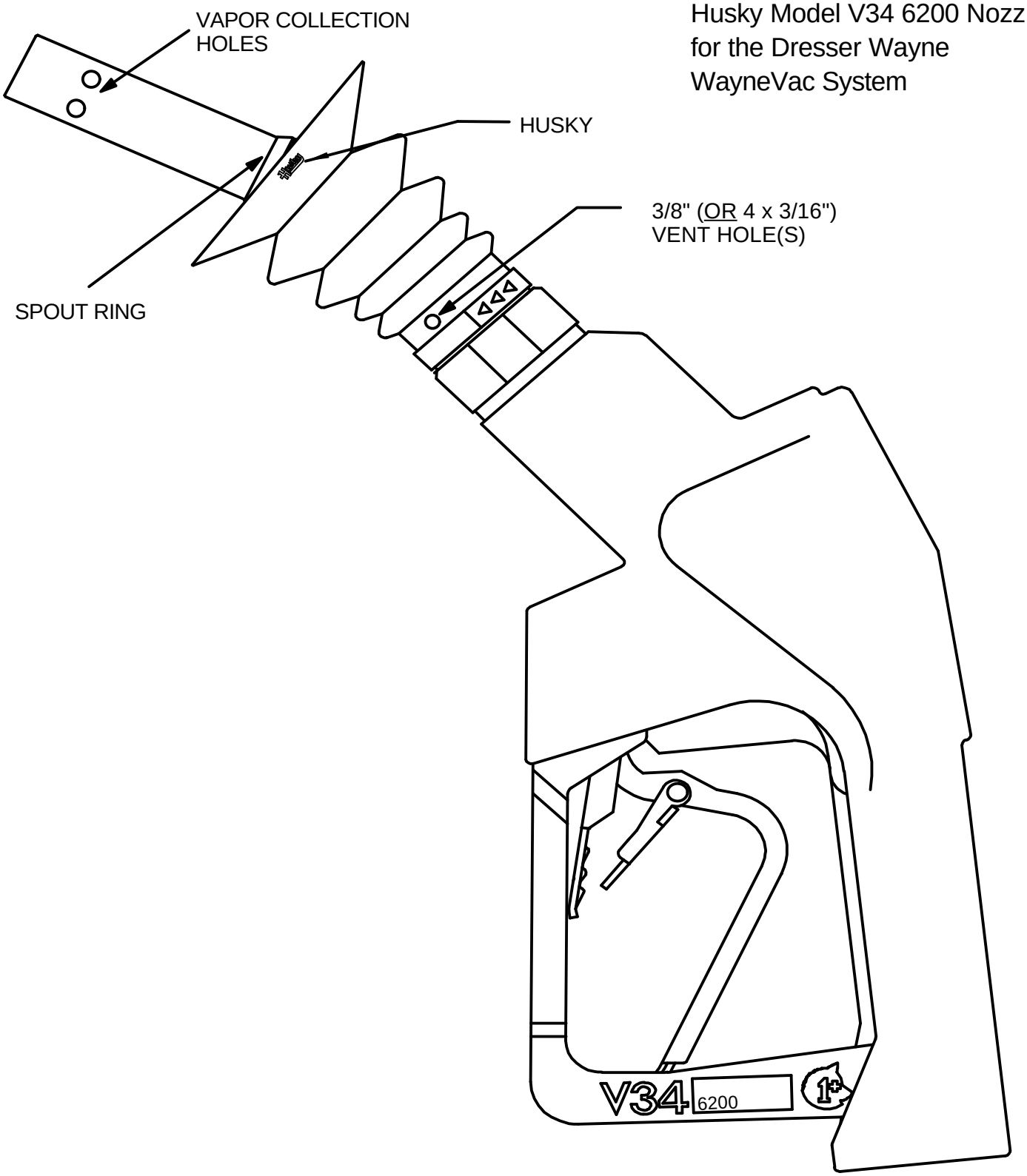

Executive Order G-70-153-AC

Exhibit 1

Figure 1A-4

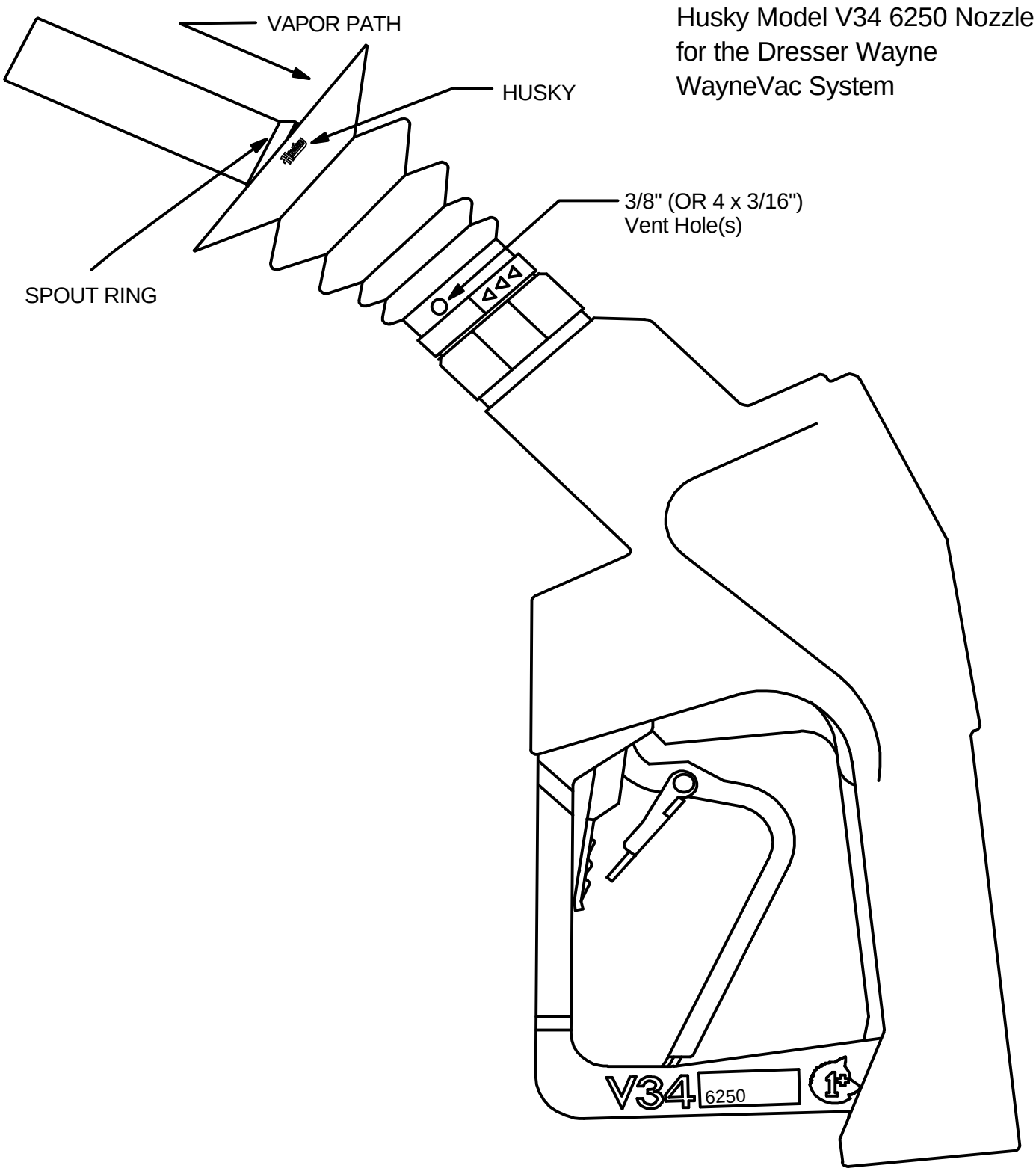

Executive Order G-70-153-AC

Exhibit 1

Figure 1A-5

Emco Wheaton A4505 Nozzle for the Dresser Wayne WayneVac System

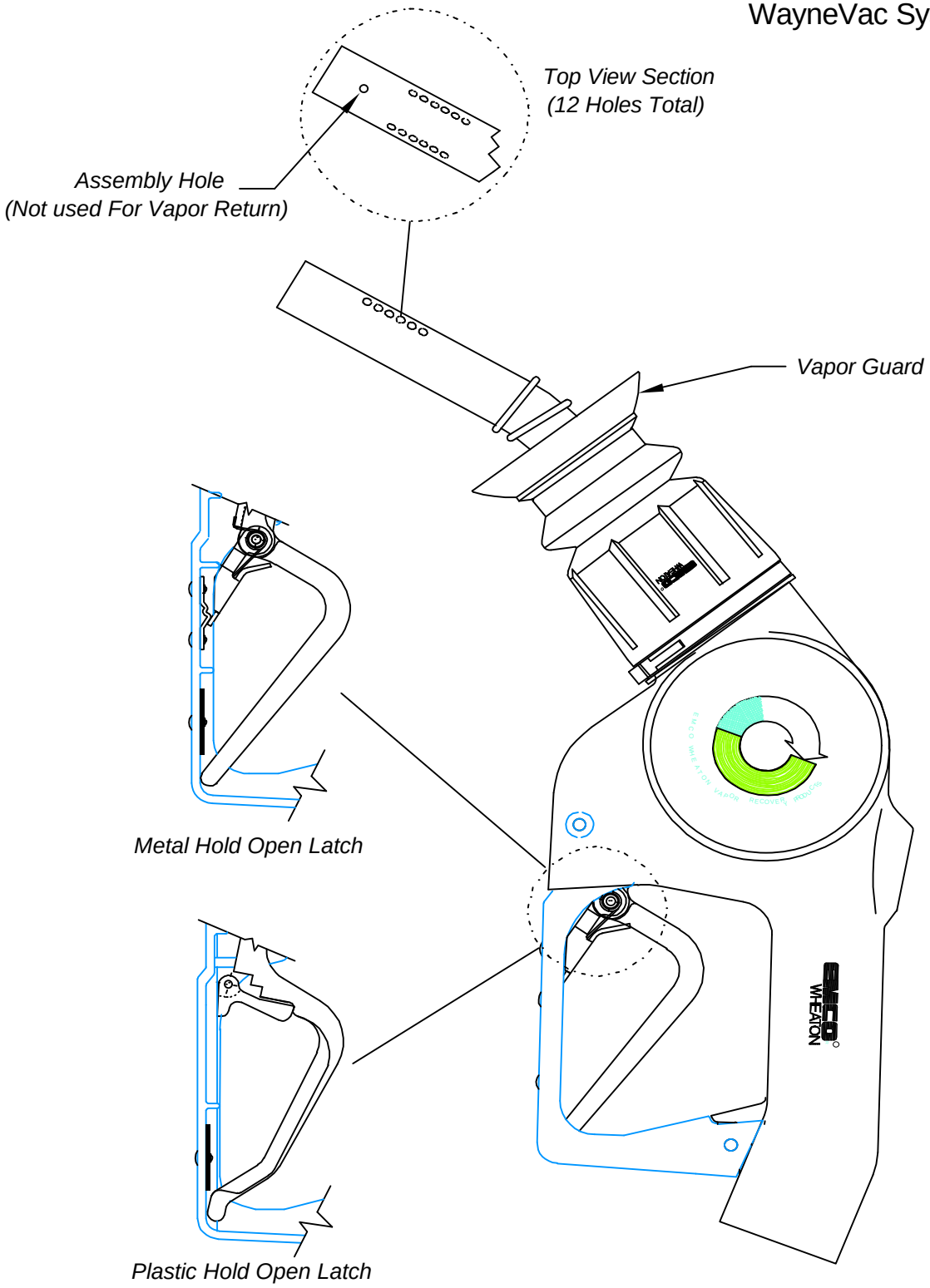

Executive Order G-70-153-AC

Exhibit 1

Figure 1A-6

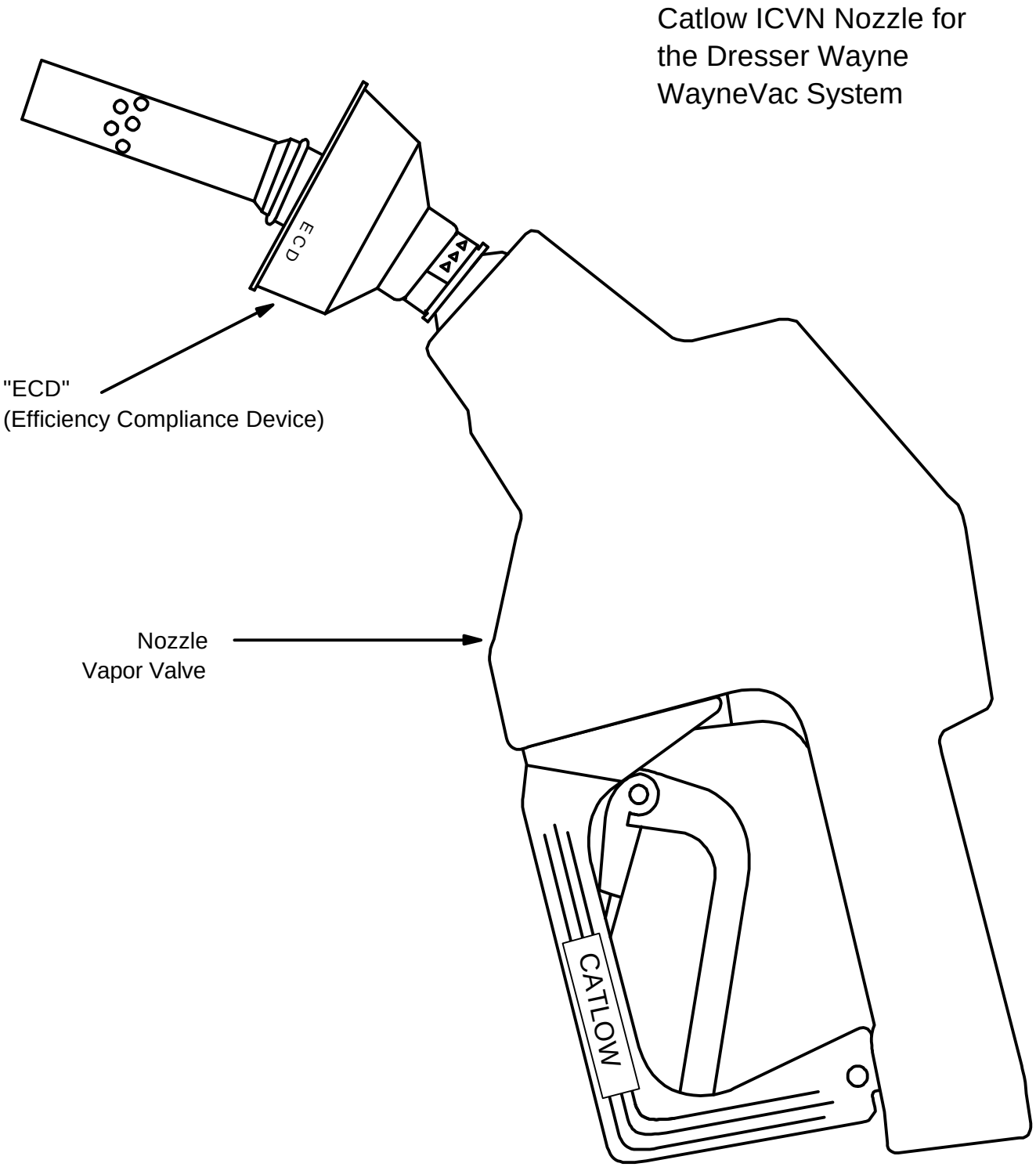

Executive Order G-70-153-AC

Exhibit 1

Figure 1A-7

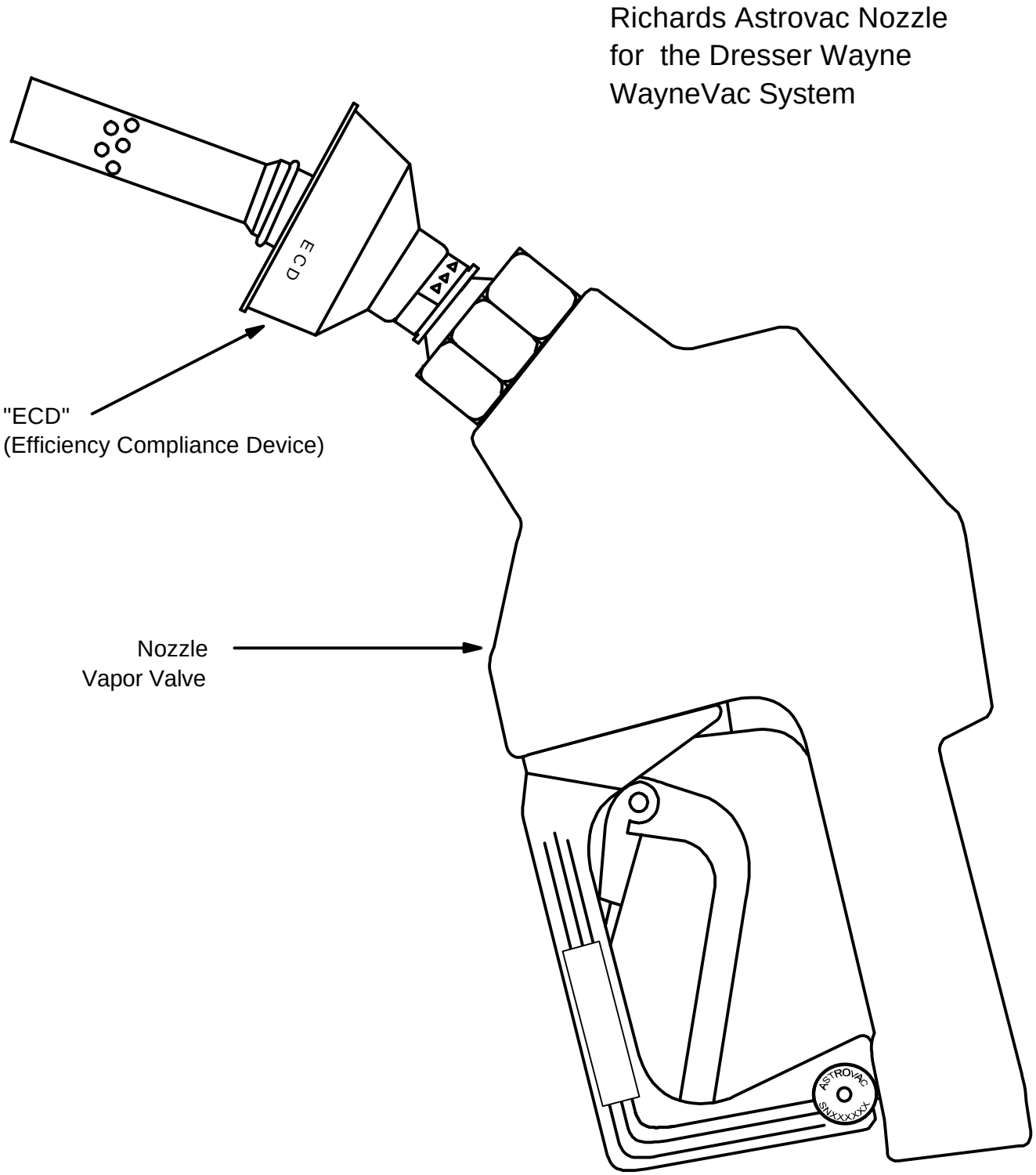

Executive Order G-70-153-AC

Exhibit 1

Figure 1B-1

WayneVac Retrofit Gilbarco MPD's

Location of the Wayne/Dresser U.L. and serial number plates (visable from the ground). See Figure 1A-2 for the plate content.

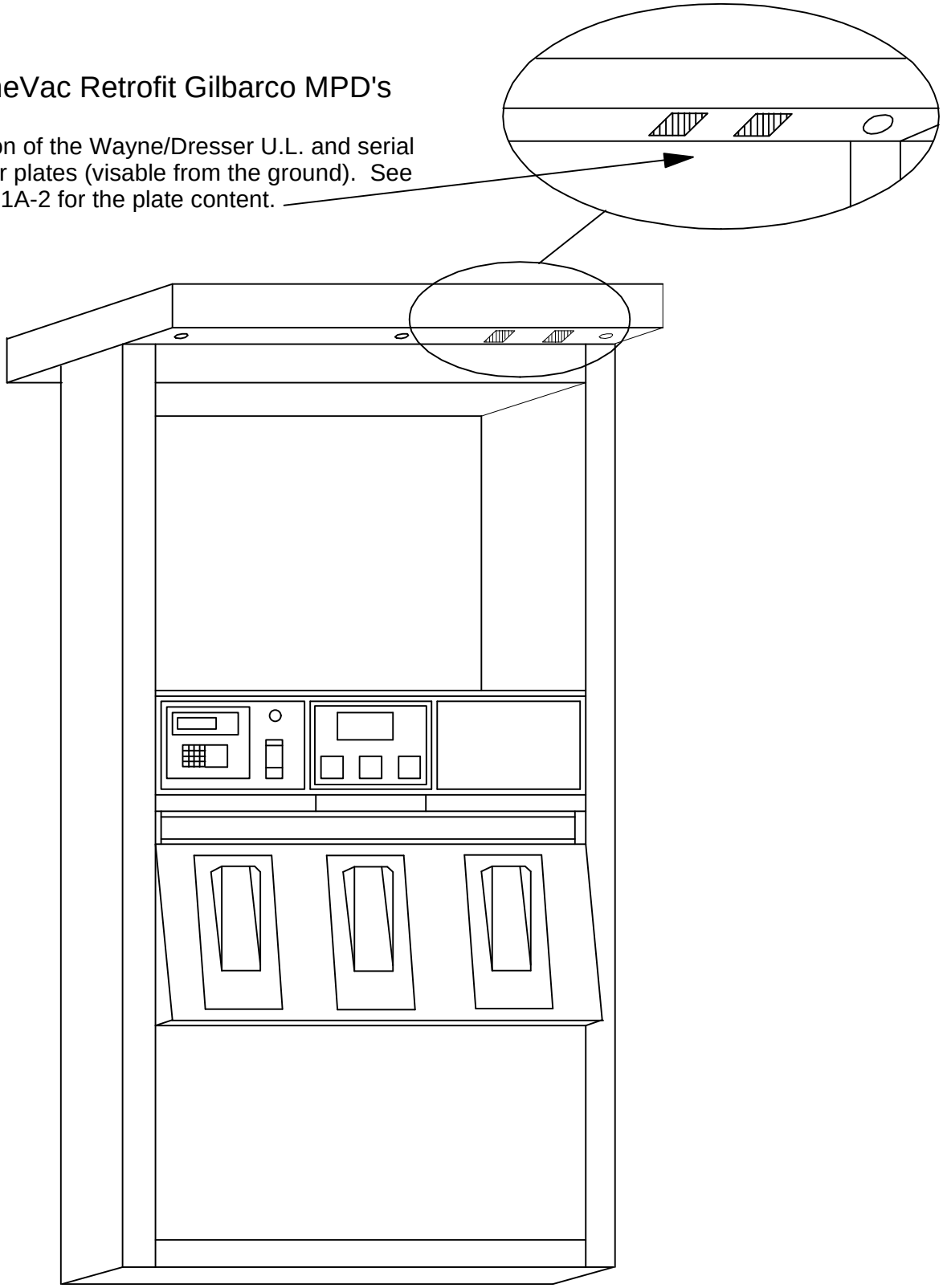

Executive Order G-70-153-AC

Exhibit 1

Figure 1B-2

UNDERWRITERS LABORATORIES INC. ®
LISTED
9L27

VAPOR RECOVERY RETROFIT ASSEMBLY
1-918726-KIT
WHEN INSTALLED AND USED IN ACCORDANCE WITH
UL REPORT REFERENCE NO. MH17133
DATED JANUARY 31, 1994

Wayne DRESSER

WAYNEVAC RETROFIT KIT

MODEL NO. **WVAC**
SERIAL NO.

THIS PRODUCT MAY BE COVERED BY ONE OR MORE PATENTS GRANTED OR PENDING.

Wayne DRESSER

WAYNE DIVISION
DRESSER INDUSTRIES, INC.
SALISBURY, MARYLAND 21801

Executive Order G-70-153-AC

Exhibit 2

Figure 2A-1

Typical Installation of the
Dresser Wayane WayneVac Phase II Vapor Recovery System
With Two-Point Phase I System

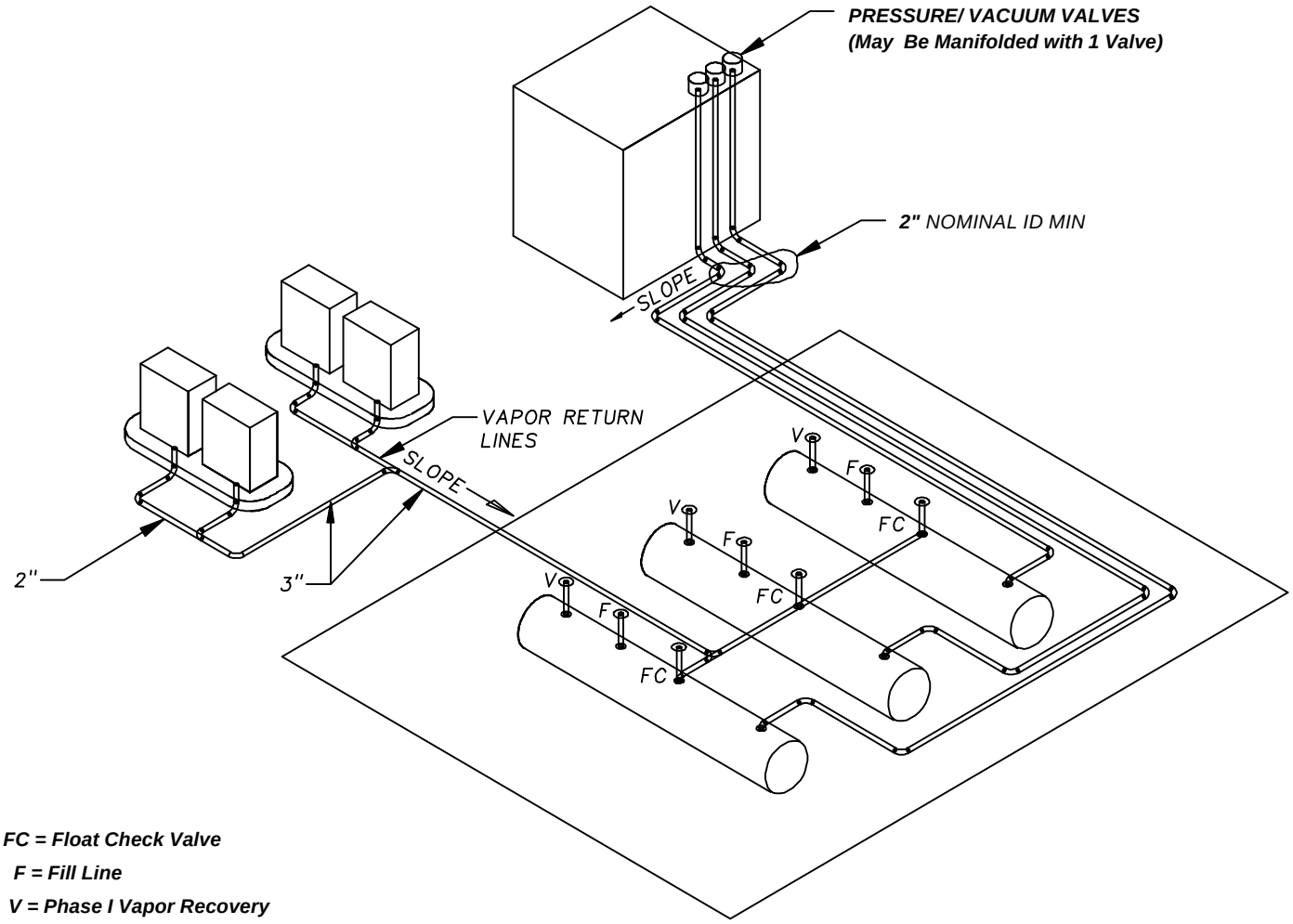

FC = Float Check Valve
F = Fill Line
V = Phase I Vapor Recovery

Note: 1. All Vapor/Vent Lines are 3" Except as Noted
2. Slope: 1/8" per foot Min.
1/4" per Foot Prefered
3. Maintain 2'0" Clearance Between Fill Line and
Phase I Vapor Return Line to Delivery Truck

Executive Order G-70-153-AC

Exhibit 2

Figure 2A-2

Typical Installation of the
Dresser Wayne WayneVac Phase II Vapor Recovery
System
With Two-Point Phase I System

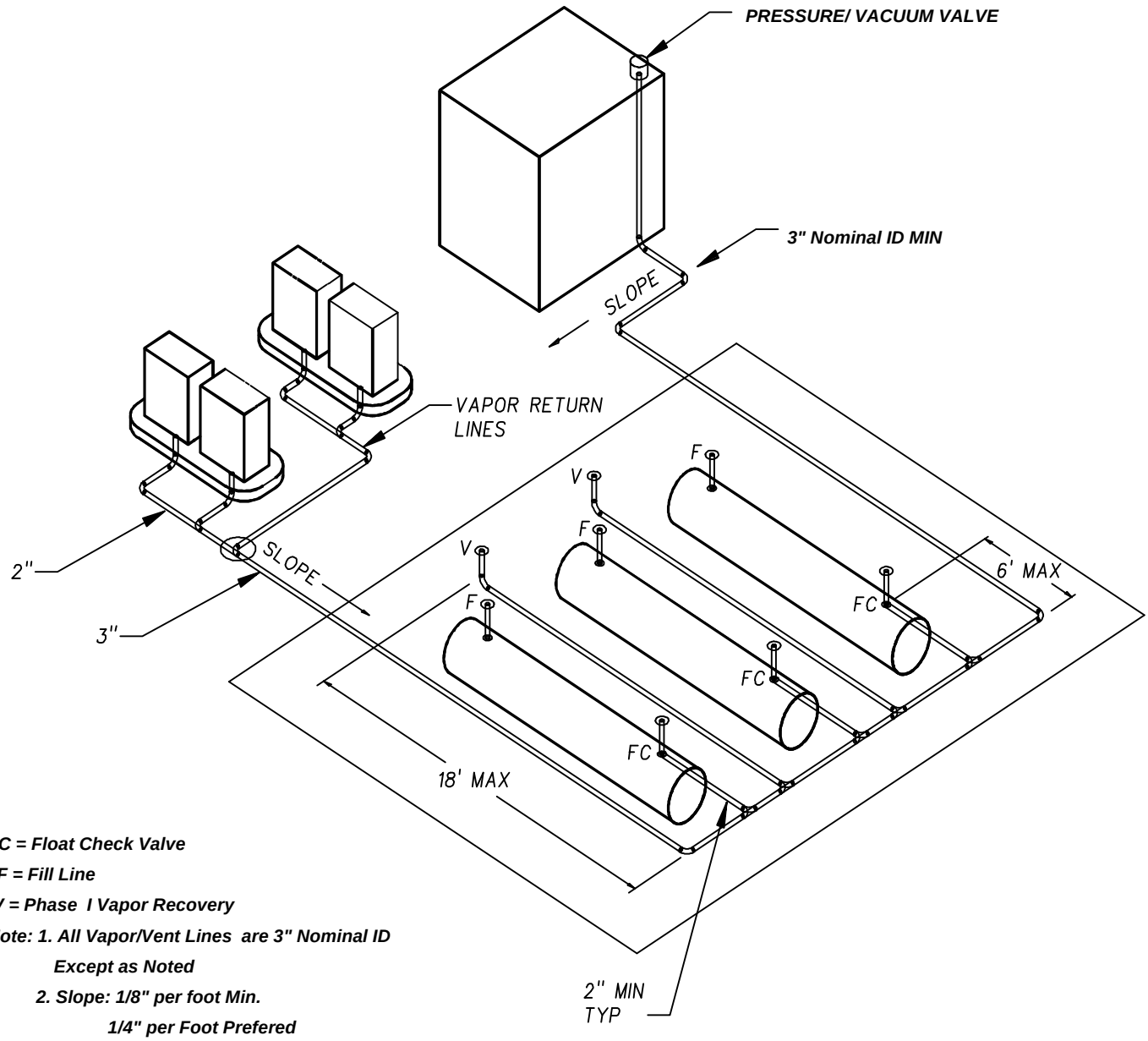

FC = Float Check Valve

F = Fill Line

V = Phase I Vapor Recovery

Note: 1. All Vapor/Vent Lines are 3" Nominal ID
Except as Noted

2. Slope: 1/8" per foot Min.
1/4" per Foot Prefered

3. Maintain 2'0" Clearance Between Fill Line and Phase I Vapor Return Line to Delivery Truck

4. No less than one vapor return hose must be connected for each product being delivered

Executive Order G-70-153-AC

Exhibit 2

Figure 2A-3

Typical Installation of the
Dresser Wayne WayneVac Phase II Vapor Recovery System
With Two-Point Phase I System

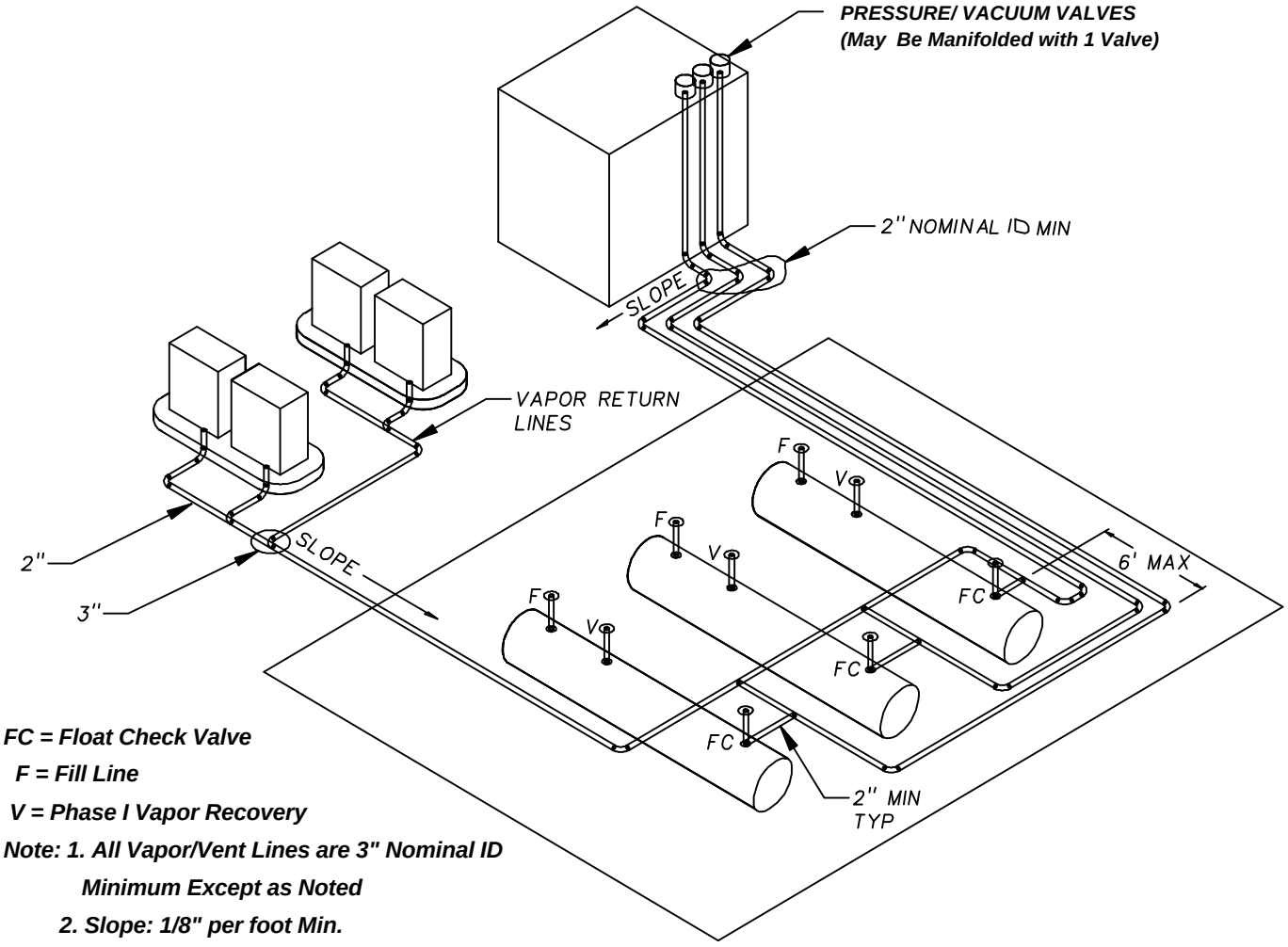

FC = Float Check Valve
F = Fill Line
V = Phase I Vapor Recovery

Note: 1. All Vapor/Vent Lines are 3" Nominal ID Minimum Except as Noted
2. Slope: 1/8" per foot Min. 1/4" per Foot Prefered
3. Maintain 2'0" Clearance Between Fill Line and Phase I Vapor Return Line to Truck

Executive Order
G-70-153-AC

Exhibit 2

Figure 2A-4

Typical Installation of the
Dresser Wayne WayneVac Phase II Vapor Recovery System
With Two-Point Phase I System

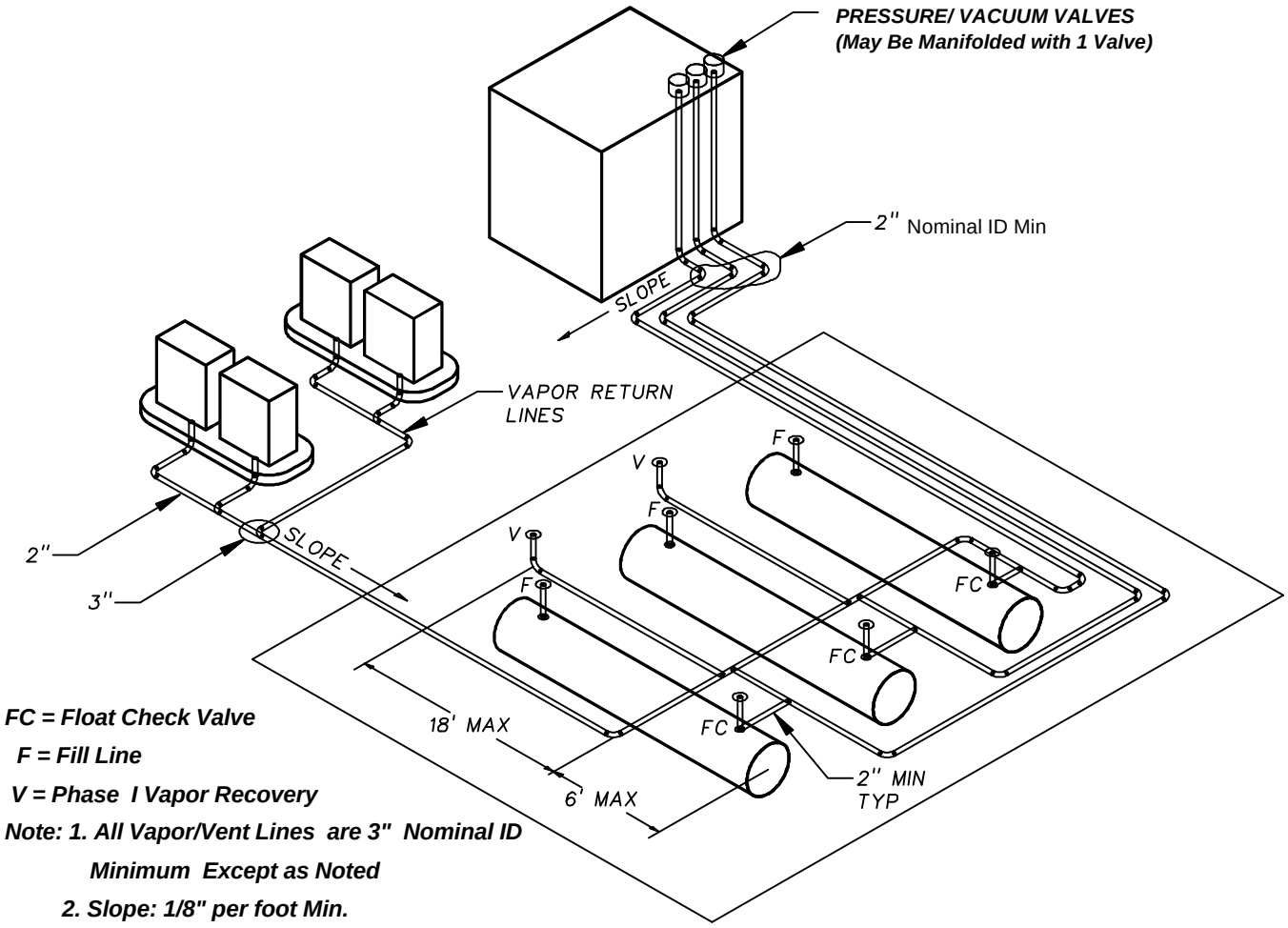

FC = Float Check Valve
F = Fill Line
V = Phase I Vapor Recovery

Note: 1. All Vapor/Vent Lines are 3" Nominal ID Minimum Except as Noted
2. Slope: 1/8" per foot Min. 1/4" per Foot Prefered
3. Maintain 2'0" Clearance Between Fill Line and Phase I Vapor Return Line to Delivery Truck
4. No less than one vapor return hose must be connected for each product being delivered

Executive Order G-70-153-AC

Exhibit 2

Figure 2A-5

Typical Installation of the
Dresser Wayne WayneVac Phase II Vapor Recovery System
With Two-Point Phase I System

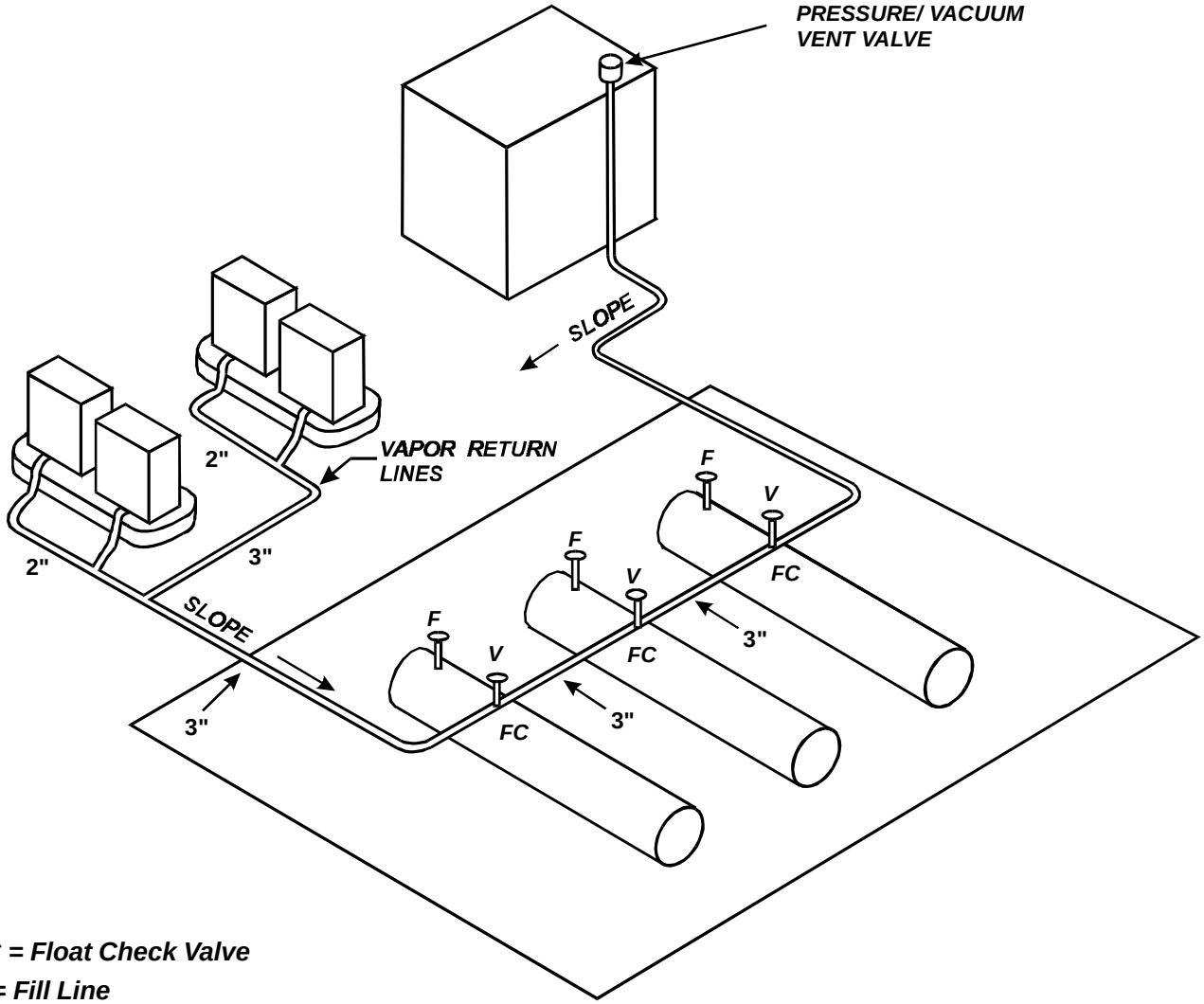

FC = Float Check Valve

F = Fill Line

V = Phase I Vapor Recovery

Note: 1. All Vapor/Vent Lines are 3" Nominal ID Minimum Except as Noted

2. Slope: 1/8" per foot Min.

1/4" per Foot Prefered

3. Maintain 2'0" Clearance Between Fill Line and

Phase I Vapor Return Line to Delivery Truck

Executive Order G-70-153-AC

Exhibit 2

Figure 2B

Hose Configurations and Possibilities
For Vista and Nonvista Dispensers

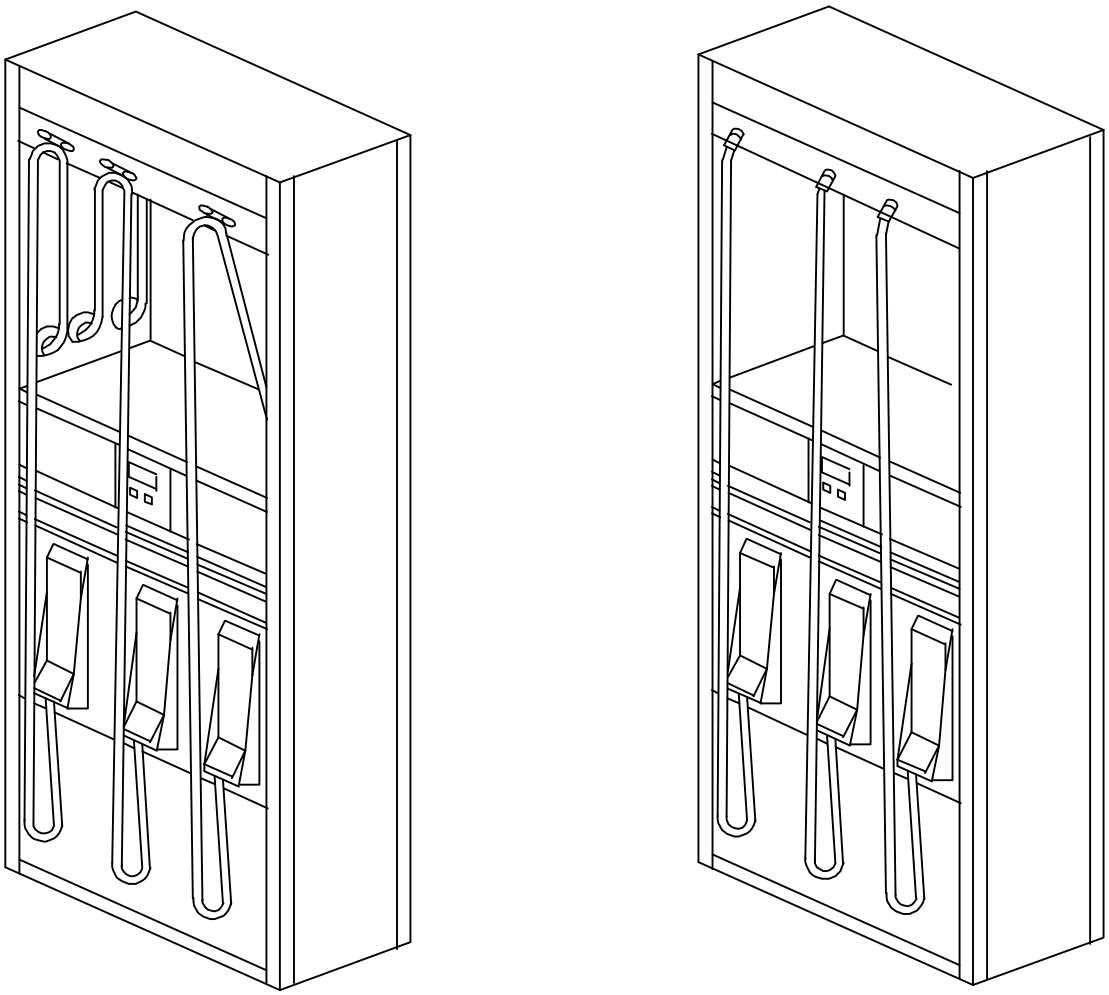

DISPENSERS MAY BE FOUR, THREE, TWO,
OR ONE HOSE PER SIDE.

Executive Order G-70-153-AC

Exhibit 1

Figure 2C

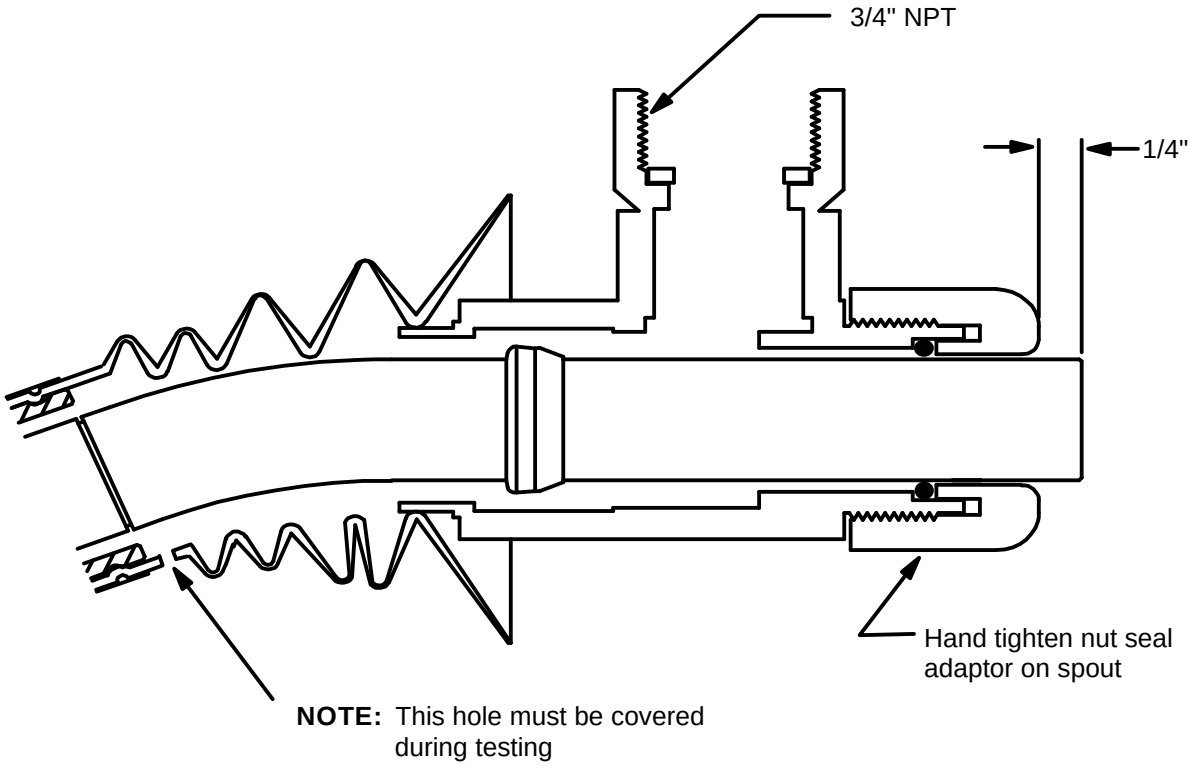

Instructions for use of the 6250 A/L Adaptor

1) Inspect the Vapor Splash Guard (VSG) and spout for damage. Any tears or extra holes in the VSG will reduce the accuracy of the test.

2) Slide the A/L adaptor over the spout such that 1/4" of the spout is exposed past the nut.

3) Hand tighten the nut. This will seal the A/L adaptor to the spout.

4) Pull the VSG up over the smallest step on the A/L adaptor. This will seal the VSG to the adaptor.

5) Using a piece of tape, seal the 1/8" hole in the cuff of the VSG.

Executive Order G-70-153-AC

Exhibit 2

Figure 2D

Installation of the A/L Adaptor

Exclude Shut-off Port: Note that the o-ring has isolated the shut-off port from the vapor holes

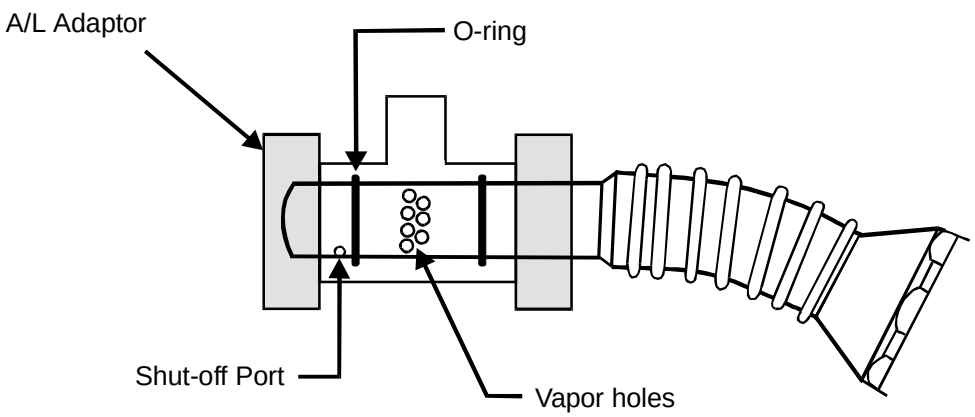

Include Shut-off Port: Note that the o-ring includes the shut-off port with the vapor holes

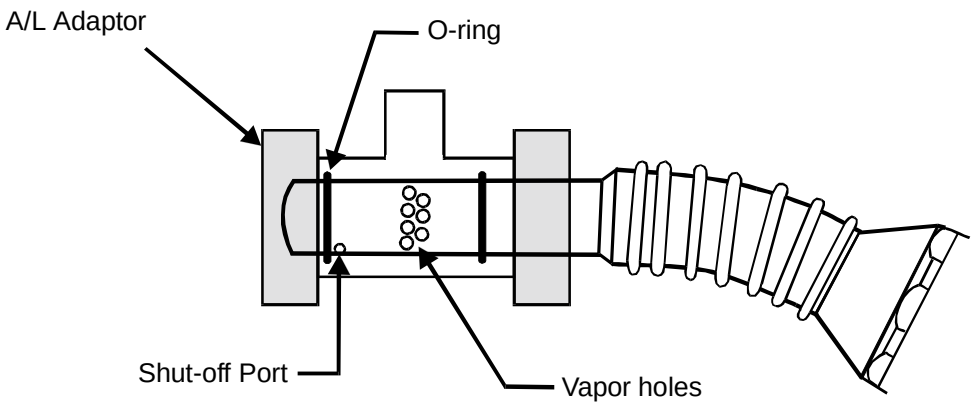

Executive Order G-70-153-AC

Dresser Wayne WayneVac
Phase II Vapor Recovery System

Exhibit 3

STATIC PRESSURE INTEGRITY TEST
UNDERGROUND STORAGE TANKS

1. APPLICABILITY

1.1 This test procedure is used to quantify the vapor tightness of vapor recovery systems installed at gasoline dispensing facilities (GDF) equipped with vacuum assist systems which require pressure/vacuum (P/V) valves, provided that the designed pressure setting of the P/V valves is a minimum of 2.5 inches of water column (inches H_2O). Excessive leaks in the vapor recovery system will increase the quantity of fugitive hydrocarbon emissions and lower the overall efficiencies of both the Phase I and Phase II vapor recovery systems.

1.2 Systems equipped with a P/V valve(s) allowed to have a designed cracking pressure less than 2.5 inches H_2O shall be bagged to eliminate any flow contribution through the valve assembly from the test results. The valve/vent pipe connection, however, shall remain unobstructed during this test.

2. PRINCIPLE

2.1 The entire vapor recovery system is pressurized with nitrogen to two (2.0) inches H_2O. The system pressure is then allowed to decay and the pressure after five (5) minutes is compared with an allowable value. The minimum allowable five-minute final pressure is based on the system ullage and pressure decay equations. For the purpose of compliance determination, this test shall be conducted after all back-filling, paving and installation of all Phase I and Phase II components, including P/V valves, has been completed.

2.2 For GDF equipped with a coaxial Phase I system, this test shall be conducted at a Phase II vapor riser. For GDF which utilize a two-point Phase I system, this test may be conducted at either a Phase II riser or a Phase I vapor coupler provided that the criteria set forth in Section 6.7 have been met. If the integrity criteria for two-point systems specified in Section 6.7 are met, it is recommended that this test be conducted at the Phase I vapor coupler.

3. RANGE

3.1 If mechanical pressure gauges are employed, the full-scale range of the pressure gauges shall be 0-2.0, 0-1.0, and 0-0.50 inches H_2O column. Maximum incremental graduations of the pressure gauge shall be 0.05 inches H_2O and the minimum accuracy of the gauge shall be three percent of full scale. The minimum diameter of the pressure gauge face shall be 4 inches. A 0-2 inches H_2O inclined manometer, or equivalent, may be used provided that the minor scale divisions do not exceed 0.02 inches H_2O.

3.2 If an electronic pressure measuring device is used, the full-scale range of the device shall not exceed 0-10 inches H_2O with a minimum accuracy of 0.5 percent of full-scale. A 0-20 inches H_2O device may be used, provided the equivalent accuracy is not less than 0.25 percent of full scale.

3.3 The minimum and maximum total ullages shall be 500 and 25,000 gallons, respectively. These values are exclusive of all vapor piping volumes.

3.4 The minimum and maximum nitrogen feed-rates, into the system, shall be one (1) and five (5) CFM, respectively.

4. INTERFERENCES

4.1 Introduction of nitrogen into the system at flowrates exceeding five (5) CFM may bias the results of the test toward non-compliance. Only gaseous nitrogen shall be used to conduct this test. Air, liquefied nitrogen, helium, or any gas other than nitrogen **shall not be used** for this test procedure.

4.2 The results of this Static Pressure Integrity Test shall not be used to verify compliance if an Air to Liquid Volumetric Ratio Test (Test Procedure TP-201.5 or equivalent) was conducted within the 24 hours prior to this test.

Figure 3-1

"T" Connector Assembly

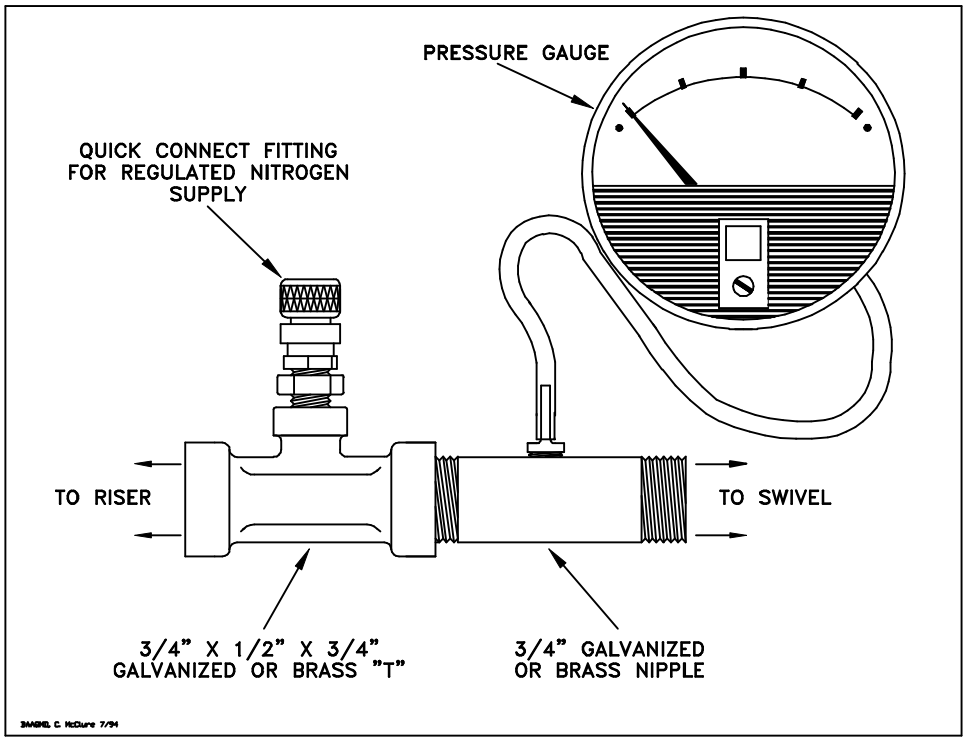

5. APPARATUS

5.1 Nitrogen. Use commercial grade nitrogen in a high pressure cylinder, equipped with a two-stage pressure regulator and a one psig pressure relief valve.

5.2 Pressure Measuring Device. Use 0-2.0, 0-1.0, and 0-0.50 inches H_2O pressure gauges connected in parallel, a 0-2 inches H_2O manometer, or an electronic pressure measuring device to monitor the pressure decay in the vapor recovery system. The pressure measuring device shall, at a minimum, be readable to the nearest 0.05 inches H_2O.

5.3 "T" Connector Assembly. See Figure 3-1 for example.

5.4 Vapor Coupler Integrity Assembly. Assemble OPW 633-A, 633-B, and 634-A adapters, or equivalent, as shown in Figure 3-2. If the test is to be conducted at the storage tank Phase I vapor coupler, this assembly shall be used prior to conducting the static leak test in order to verify the pressure integrity of the vapor poppet. The internal volume of this assembly shall not exceed 0.1 cubic feet.

Figure 3-2

Vapor Coupler Integrity Assembly

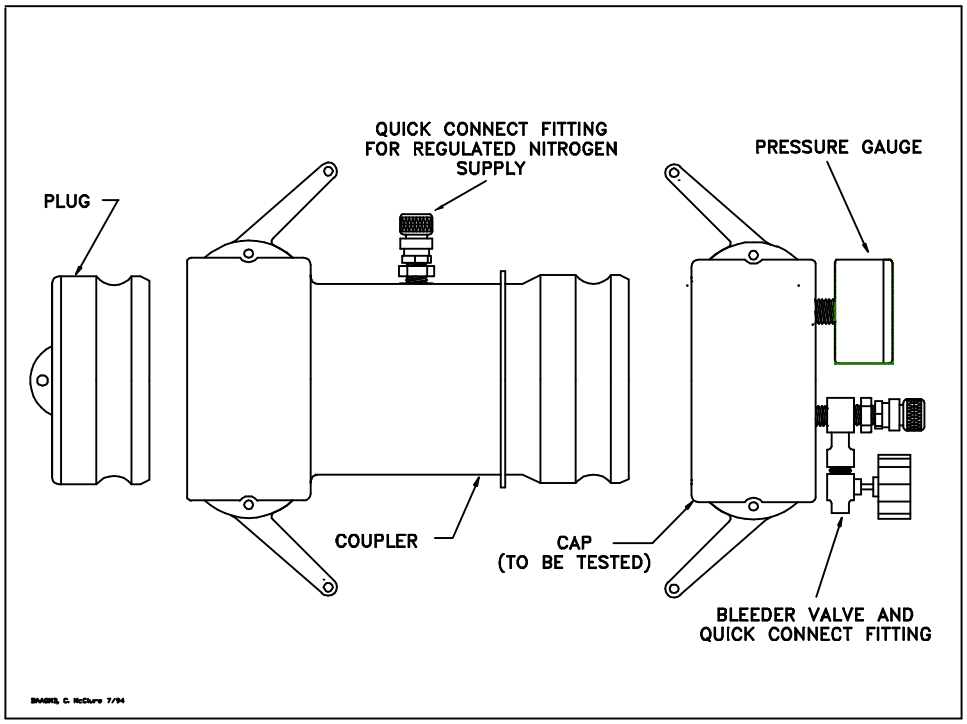

5.5 Vapor Coupler Test Assembly. Use a compatible OPW 634-B cap, or equivalent, equipped with a center probe to open the poppet, a pressure measuring device to monitor the pressure decay, and a connection for the introduction of nitrogen into the system. See Figure 3-3 for an example.

Figure 3-3

Vapor Coupler Integrity Assembly

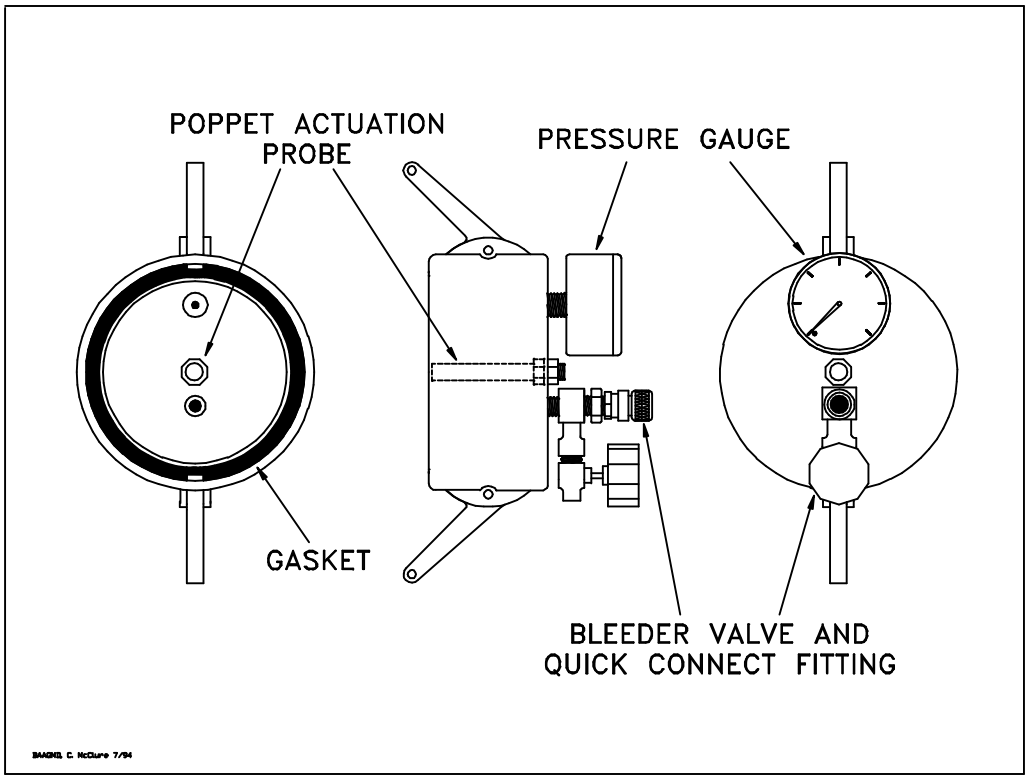

5.6 Stopwatch. Use a stopwatch accurate to within 0.2 seconds.

5.7 Flowmeter. Use a Dwyer flowmeter, Model RMC-104, or equivalent, to determine the required pressure setting of the delivery pressure gauge on the nitrogen supply pressure regulator. This pressure shall be set such that the nitrogen flowrate is between 1.0 and 5.0 CFM.

5.8 Combustible Gas Detector. A Bacharach Instrument Company, Model 0023-7356, or equivalent, may be used to verify the pressure integrity of system components during this test.

5.9 Leak Detection Solution. Any liquid solution designed to detect vapor leaks may be used to verify the pressure integrity of system components during this test.

6. PRE-TEST PROCEDURES

6.1 The following safety precautions shall be followed:

6.1.1 Only nitrogen shall be used to pressurize the system.

6.1.2 A one psig relief valve shall be installed to prevent the possible over-pressurizing of the storage tank.

6.1.3 A ground strap should be employed during the introduction of nitrogen into the system.

6.2 Failure to adhere to any or all of the following time and activity restrictions shall invalidate the test results:

6.2.1 There shall be no Phase I bulk product deliveries into or out of the storage tank(s) within the three (3) hours prior to the test or during performance of this test procedure.

6.2.2 There shall be no product dispensing within thirty (30) minutes prior to the test or during performance of this test procedure.

6.2.3 Upon commencement of the thirty minute “no dispensing” portion of this procedure, the headspace pressure in the tank shall be measured. If the pressure exceeds 0.50 inches H_2O, the pressure shall be carefully relieved in accordance with all applicable safety requirements. After the thirty minute “no dispensing” portion of this procedure, and prior to introduction of nitrogen, the headspace pressure shall again be lowered, if necessary, to less than 0.50 inches H_2O.

6.2.4 There shall be no Air to Liquid Volumetric Ratio Test (Test Procedure TP-201.5) conducted within the twenty-four (24) hour period immediately prior to this test.

6.3 Measure the gallons of gasoline present in each underground storage tank and determine the actual capacity of each storage tank from facility records. Calculate the ullage space for each tank by subtracting the gasoline gallonage present from the actual tank capacity. The minimum ullage during the test shall be 25 percent of the tank capacity or 500 gallons, whichever is greater. The total ullage shall not exceed 25,000 gallons.

6.4 For two-point Phase I systems, this test shall be conducted with the dust cap removed from the vapor coupler. This is necessary to determine the vapor tightness of the Phase I vapor poppet. See Section 6.7 if this test is to be conducted at the Phase I vapor coupler.

6.4.1 For coaxial Phase I systems, this test shall be conducted with the dust cap removed from the Phase I coupler. This is necessary to insure the vapor tightness of the Phase I vapor poppet.

6.4.2 Verify that the liquid level in the storage tank is at least four (4) inches above the highest opening at the bottom of the submerged drop tube.

6.5 If the Phase I containment box is equipped with a drain valve, the valve assembly may be cleaned and lubricated prior to the test. This test shall, however, be conducted with the drain valve installed and the manhole cover removed. See subsection 7.4.1 for further details regarding containment box drain valves.

6.6 If the test is to be conducted at a Phase II vapor riser, disconnect the dispenser end of one vapor recovery hose and install the "T" connector assembly (see Figure 3-1). Connect the nitrogen gas supply (do not use air) and the pressure measuring device to the "T" connector.

6.6.1 For those Phase II systems utilizing a dispenser mounted remote vapor check valve, the “T” connector assembly shall be installed on the vapor riser side of the check valve.

6.7 If this test is to be conducted at the Phase I vapor coupler on a two-point Phase I system, the procedures set forth in subsections 6.7.1 and 6.7.2 shall be successfully completed prior to testing. The static pressure integrity test shall not be conducted at the Phase I coupler at facilities equipped with coaxial Phase I systems.

6.7.1 Connect the Vapor Coupler Integrity Assembly to the Phase I vapor coupler. Connect the Vapor Coupler Test Assembly. Connect the nitrogen supply to the assembly and carefully pressurize the internal volume of the assembly to two (2.0) inches H_2O. Start the stopwatch. Record the final pressure after one minute.

6.7.2 If the pressure after one minute is less than 0.25 inches H_2O, the leak rate through the Phase I vapor poppet precludes conducting the static leak test at this location. If the pressure after one minute is greater than or equal to 0.25 inches H_2O, the static leak test may be conducted at this location. This criteria assures a maximum leak rate through the Phase I vapor poppet of less than 0.0004 cubic feet per minute.

6.7.3 Disconnect the Vapor Coupler Integrity Assembly from the Phase I vapor coupler. If the requirements of subsection 6.7.2 were met, connect the Vapor Coupler Test Assembly to the Phase I vapor coupler.

6.7.4 As an alternate to the requirements of subsections 6.7.1 through 6.7.3, leak detection solution may be used to verify the absence of vapor leaks through the Phase I vapor poppet on two-point Phase I systems. This alternative leak check is valid only for two-point Phase I systems in which tanks are manifolded. The manifold may be at the vent pipes. Pressurize the system to two (2) inches H_2O and use the leak detection solution to verify a zero leak (absence of bubbles) condition at one of the vapor poppets on the Phase I system.

6.8 All pressure measuring device(s) shall be bench calibrated using either a reference gauge or incline manometer. Calibration shall be performed at 20, 50, and 80 percent of full scale. Accuracy shall be within two percent at each

of these calibration points. Calibrations shall be conducted on a frequency not to exceed 90 days.

6.9 Use the flowmeter to determine the nitrogen regulator delivery pressures which correspond to nitrogen flowrates of 1.0 and 5.0 CFM. These pressures define the allowable range of delivery pressures acceptable for this test procedure. Also record which regulator delivery pressure setting, and the corresponding nitrogen flowrate that will be used during the test. As an alternative, the flowmeter may be connected, in-line between the nitrogen supply regulator and Vapor Coupler Test Assembly, during the test.

6.10 Use Equation 9.2 to calculate the approximate time required to pressurize the system ullage to the initial starting pressure of two (2.0) inches H_2O. This will allow the tester to minimize the quantity of nitrogen introduced into those systems which cannot comply with the static leak standards.

6.11 Attach the Vapor Coupler Test assembly to the Phase I poppet or the "T" connector assembly to the Phase II vapor riser. Read the initial pressure of the storage tank and underground piping. If the initial pressure is greater than 0.5 inches H_2O, carefully bleed off the pressure, in accordance with all applicable safety procedures, in the storage tank and underground piping to less than 0.5 inches H_2O column.

7. TESTING

7.1 Open the nitrogen gas supply valve and set the regulator delivery pressure within the allowable range determined in Section 6.9, and start the stopwatch. Pressurize the vapor system (or subsystem for individual vapor return line systems) to **at least 2.2 inches H_2O** initial pressure. It is critical to maintain the nitrogen flow until the pressure stabilizes, indicating temperature and vapor pressure stabilization in the tanks. Check the test equipment using leak detecting solution or a combustible gas detector to verify that all test equipment is leak tight.

7.1.1 If the time required to achieve the initial pressure of two (2.00) inches H_2O exceeds twice the time derived from Equation 9.2, stop the test and use a liquid leak detector, or a combustible gas detector, to find the leak(s) in the system. Failure to achieve the initial starting pressure within twice the time derived from Equation 9.2 demonstrates the inability of the system to meet the performance criteria. Repair or replace the faulty component(s) and restart the test pursuant to Section 7.1.

7.2 Close and disconnect the nitrogen supply. Start the stopwatch when the pressure has decreased to the initial starting pressure of two (2.0) inches H_2O.

7.3 At one-minute intervals during the test, record the system pressure. After five minutes, record the final system pressure. See Table 3-I (or Equation 9.1) to determine the acceptability of the final system static pressure results. For intermediate values of ullage in Tables 3-I, linear interpolation may be employed.

7.4 If the system failed to meet the criteria set forth in Table 3-I (or Equation 9-2), repressurize the system and check all accessible vapor connections using leak detector solution or a combustible gas detector. If vapor leaks in the system are encountered, repair or replace the defective component and repeat the test. Potential sources of leaks include nozzle check valves, pressure/vacuum relief valves, containment box drain valve assemblies, and plumbing connections at the risers.

7.4.1 If the facility fails to comply with the static leak test standards and the Phase I system utilizes a non-CARB-certified drain valve equipped containment box, which was installed prior to July 1, 1992, for which a CARB-certified replacement drain valve assembly is not marketed, the following two subsections shall apply:

7.4.1.1 The drain valve may be removed and the port plugged. Reset the system. If the facility complies with the static leak test standards under these conditions, the facility shall be considered complying with the requirements, provided that the manufacturer and model number of the containment box and the date of installation are submitted with the test results.

7.4.1.2 The criteria set forth in subsection 7.4.1.1 shall not apply after July 1, 1996.

7.5 After the remaining system pressure has been relieved, remove the "T" connector assembly and reconnect the vapor recovery hose, if applicable.

7.6 If the vapor recovery system utilizes individual vapor return lines, repeat the leak test for each gasoline grade. Avoid leaving any vapor return line open longer than is necessary to install or remove the "T" connector assembly.

7.7 If the containment box has a cover-actuated drain valve, repeat the test with the cover in place. In these cases clearly specify, on Form 3-1, which results represent the pressure integrity with and without the cover in place.

8. POST-TEST PROCEDURES

8.1 Use Table 3-I, or Equation 9.1 to determine the compliance status of the facility by comparing the final five-minute pressure with the minimum allowable final pressure.

9. CALCULATIONS

9.1 The minimum allowable five-minute final pressure, with an initial pressure of two (2.0) inches H_2O, shall be calculated as follows:

[Equation 9-1]

$$P_f = 2e^{\frac{-500.887}{V}} \quad \text{if } N = 1\text{-}6$$

$$P_f = 2e^{\frac{-531.614}{V}} \quad \text{if } N = 7\text{-}12$$

$$P_f = 2e^{\frac{-562.455}{V}} \quad \text{if } N = 13\text{-}18$$

$$P_f = 2e^{\frac{-593.412}{V}} \quad \text{if } N = 19\text{-}24$$

$$P_f = 2e^{\frac{-624.483}{V}} \quad \text{if } N > 24$$

Where:

N = The number of affected nozzles. For manifolded systems, N equals the total number of nozzles. For dedicated plumbing configurations, N equals the number of nozzles serviced by the tank being tested.

V = The total ullage affected by the test, gallons

P_f = The minimum allowable five-minute final pressure, inches H_2O

e = A dimensionless constant approximately equal to 2.718

2 = The initial starting pressure, inches H_2O

9.2 The minimum time required to pressure the system ullage from zero (0) to two (2.0) inches H_2O gauge pressure shall be calculated as follows:

$$t_2 = \frac{V}{[1522]F} \qquad \text{[Equation 9-2]}$$

Where:

t_2 = The minimum time to pressurize the ullage to two inches H_2O, minutes

V = The total ullage affected by the test, gallons

F = The nitrogen flowrate into the system, CFM

1522 = The conversion factor for pressure and gallons

9.3 If the policy of the local district requires an allowable tolerance for testing error, the minimum allowable five-minute final pressure, including testing error, shall be calculated as follows:

$$P_{f-E} = 2 - \left[1 + \left(\frac{E}{100}\right)\right]\left[408.9 - \left(P_f + 406.9\right)\right] \qquad \text{[Equation 9-3]}$$

Where:

$P_{f\text{-}E}$	=	The minimum allowable five-minute final pressure including allowable testing error, inches H_2O
E	=	The allowable testing error, percent
P_f	=	The minimum allowable five-minute final pressure calculated in Equations 9-1 or 9-2, inches H_2O
2	=	The initial starting pressure, inches H_2O
408.9	=	Atmospheric pressure plus the initial starting pressure, inches H_2O
406.9	=	Atmospheric pressure, inches H_2O

10. REPORTING

10.1 The calculated ullage and system pressures for each five-minute vapor recovery system test shall be reported as shown in Form 3-1. Be sure to include the Phase I system type (two-point or coaxial), the Phase II system type, whether the system is manifolded, and the one-minute pressures during the test.

Executive Order G-70-153-AC

TABLE 3-1

Pressure Decay Leak Rate Criteria
Initial Pressure of 2 inches of H_2O
Minimum Pressure After 5 Minutes, inches of H_2O

ULLAGE, GALLONS	NUMBER OF AFFECTED NOZZLES				
	01-06	07-12	13-18	19-24	> 24
500	**0.73**	**0.69**	**0.65**	**0.61**	**0.57**
550	0.80	0.76	0.72	0.68	0.64
600	**0.87**	**0.82**	**0.78**	**0.74**	**0.71**
650	0.93	0.88	0.84	0.80	0.77
700	**0.98**	**0.94**	**0.90**	**0.86**	**0.82**
750	1.03	0.98	0.94	0.91	0.87
800	**1.07**	**1.03**	**0.99**	**0.95**	**0.92**
850	1.11	1.07	1.03	1.00	0.96
900	**1.15**	**1.11**	**1.07**	**1.03**	**1.00**
950	1.18	1.14	1.11	1.07	1.04
1,000	**1.21**	**1.18**	**1.14**	**1.10**	**1.07**
1,200	1.32	1.28	1.25	1.22	1.19
1,400	**1.40**	**1.37**	**1.34**	**1.31**	**1.28**
1,600	1.46	1.43	1.41	1.38	1.35
1,800	**1.51**	**1.49**	**1.46**	**1.44**	**1.41**
2,000	1.56	1.53	1.51	1.49	1.46
2,200	**1.59**	**1.57**	**1.55**	**1.53**	**1.51**
2,400	1.62	1.60	1.58	1.56	1.54
2,600	**1.65**	**1.63**	**1.61**	**1.59**	**1.57**
2,800	1.67	1.65	1.64	1.62	1.60
3,000	**1.69**	**1.68**	**1.66**	**1.64**	**1.62**
3,500	1.73	1.72	1.70	1.69	1.67
4,000	**1.76**	**1.75**	**1.74**	**1.72**	**1.71**
4,500	1.79	1.78	1.77	1.75	1.74
5,000	**1.81**	**1.80**	**1.79**	**1.78**	**1.77**
6,000	1.84	1.83	1.82	1.81	1.80
7,000	**1.86**	**1.85**	**1.85**	**1.84**	**1.83**
8,000	1.88	1.87	1.86	1.86	1.85
9,000	**1.89**	**1.89**	**1.88**	**1.87**	**1.87**
10,000	1.90	1.90	1.89	1.88	1.88
15,000	**1.93**	**1.93**	**1.93**	**1.92**	**1.92**
20,000	1.95	1.95	1.94	1.94	1.94
25,000	**1.96**	**1.96**	**1.96**	**1.95**	**1.95**

Note: For manifolded Phase II Systems, the **"Number of Affected Nozzles"** shall be the total of all gasoline nozzles. For dedicated return configurations, the **"Number of Affected Nozzles"** shall be the total of those nozzles served by the tank being tested.

Form 3-1

Distribution:	Executive Order G-70-153-AC Exhibit 3 **Summary of Source Test Results**	Report No.: _____ Test Date: _____ Test Times: Run A: _____ Run B: _____ Run C: _____

Source Information		Facility Parameters
GDF Name and Address	GDF Representative and Title	PHASE I SYSTEM TYPE (Check One)
		Two Point ☐
		Coaxial ☐
	GDF Phone No. ( )	Coaxial with Spill Prevention
	Source: GDF Vapor Recovery System	PHASE II SYSTEM TYPE ☐
Permit Conditions	GDF # _____	WayneVac
	A/C # _____	Manifolded? Y or N

Operating Parameters:

Number of Nozzles Served by Tank #1 _____ Number of Nozzles Served by Tank #3 _____

Number of Nozzles Served by Tank #2 _____ Total Number of Gas Nozzles at Facility _____

Applicable Regulations: FOR OFFICE USE ONLY:

Source Test Results and Comments:

TANK #:	1	2	3	TOTAL
1. Product Grade				
2. Actual Tank Capacity, Gallons				
3. Gasoline Volume, Gallons				
4. Ullage, Gallons (#2 -#3)				
5. Phase I System Type				
6. Initial Test Pressure, Inches H_2O **(2.0)**				
7. Pressure After 1 Minute, Inches H_2O				
8. Pressure After 2 Minutes, Inches H_2O				
9. Pressure After 3 Minutes, Inches H_2O				
10. Pressure After 4 Minutes, Inches H_2O				
11. **Final Pressure After 5 Minutes, Inches H_2O**				
12. Allowable Final Pressure from Table 3-1				
13. Test Status [**Pass** or **Fail**]				

Test Conducted by:	Test Company Name _____ Address _____ City _____	Date and Time of Test:

Executive Order G-70-153-AC

Exhibit 4

TEN GALLON PER MINUTE LIMITATION COMPLIANCE VERIFICATION PROCEDURE

Compliance with the 10 gallon per minute flowrate limitation shall be determined with the following methodology. It is recommended that the maximum dispensing rate through each nozzle/hose assembly be verified.

1) The facility uses identical models of hoses, nozzles, and breakaways:

Check the nozzle closest to the submersible turbine pump (STP) for each gas grade, or STP, at the facility. With no other dispensing occurring which uses the same STP, dispense gas into a vehicle or approved container. Dispensing shall be conducted in the “hand-held, wide-open” mode. Using a stopwatch accurate to at least 0.2 seconds, begin timing the dispensing rate after at least one gallon has been dispensed. This one gallon buffer is necessary due to the “slow-start” nature of some dispensers. Determine the time required to dispense 2, 3, 4, or 5 gallons of gasoline. The facility shall be deemed in compliance with the 10 gallon per minute limitations if the elapsed time meets, or exceeds, the times shown in Table 1. If the dispensing rate exceeds the allowable limit, a CARB-certified flow limiting device shall be installed.

2) The facility uses different models of hoses, nozzles, or breakaways

Due to potential differences in pressure drops through the various components, each of the nozzle/hose assemblies shall be tested for maximum dispensing rates. Using the same criteria as above, determine the maximum dispensing rate through each nozzle/hose assembly. If the maximum dispensing rate exceeds the 10 gpm limit, a CARB-certified flow limiting device shall be installed.

Table 1
Verification of 10 gpm

Product Dispensed, gallons	Minimum Allowable Time, seconds
2.0	11.8
3.0	17.7
4.0	23.6
5.0	29.5

Note: The times have been corrected to allow for the accuracy of the measurement.