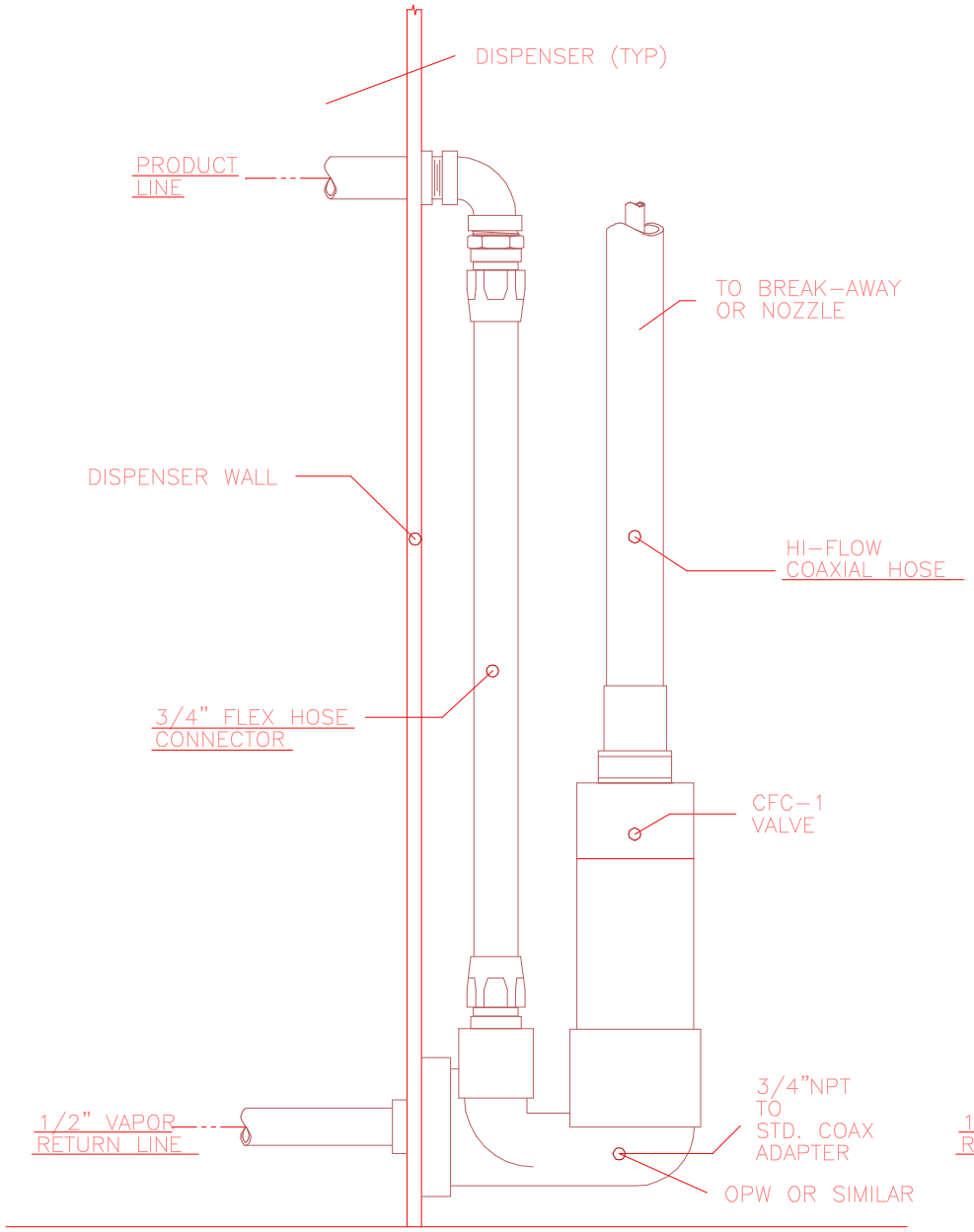

FOR STANDARD VAPOR NOZZLES

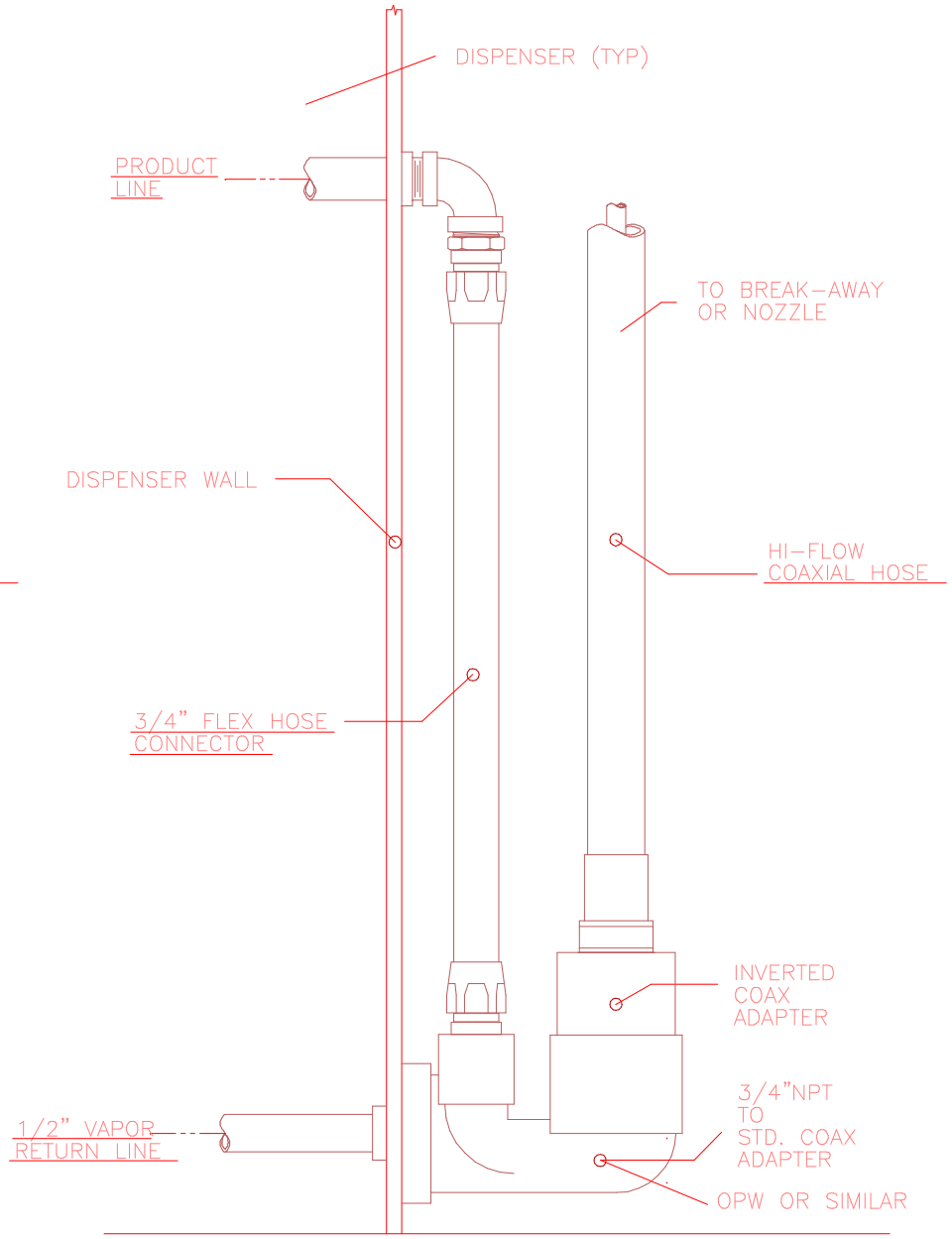

FOR INTERNAL VAPOR VALVE NOZZLES

Executive Order G-70-164-AA
Figure 10
Standard Dispenser Installation