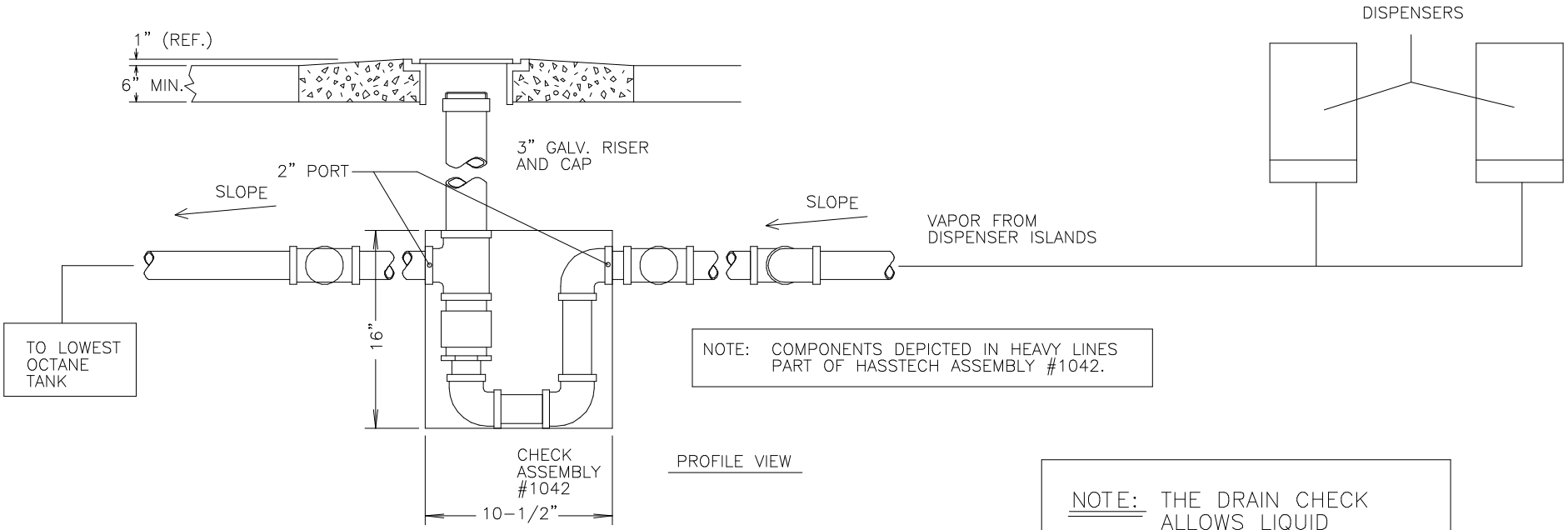

NOTE: COMPONENTS DEPICTED IN HEAVY LINES PART OF HASSTECH ASSEMBLY #1042.

PROFILE VIEW

NOTE: THE DRAIN CHECK ALLOWS LIQUID FROM V.R. NOZZLE SIDE TO DRAIN TO STORAGE TANK WHEN COLLECTION UNIT IS OFF, AND TO PREVENT VAPOR FLOW OUT OF STORAGE TANK WHEN COLLECTION UNIT IS ON.

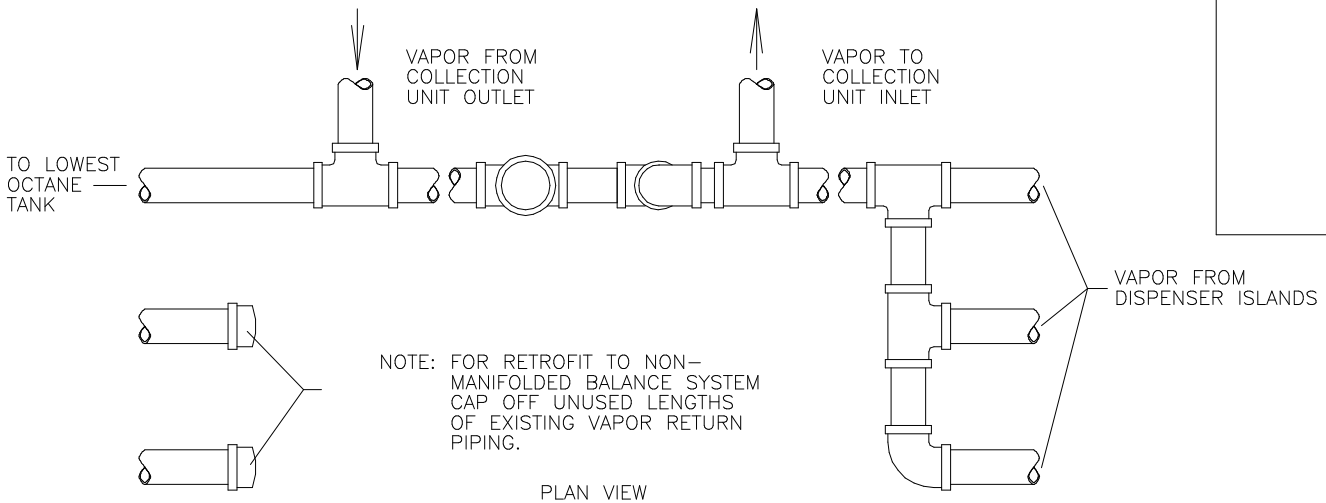

NOTE: FOR RETROFIT TO NON-MANIFOLDED BALANCE SYSTEM CAP OFF UNUSED LENGTHS OF EXISTING VAPOR RETURN PIPING.

PLAN VIEW

Executive Order G-70-164-AA
Figure 4
Out Of Tank Drain Check