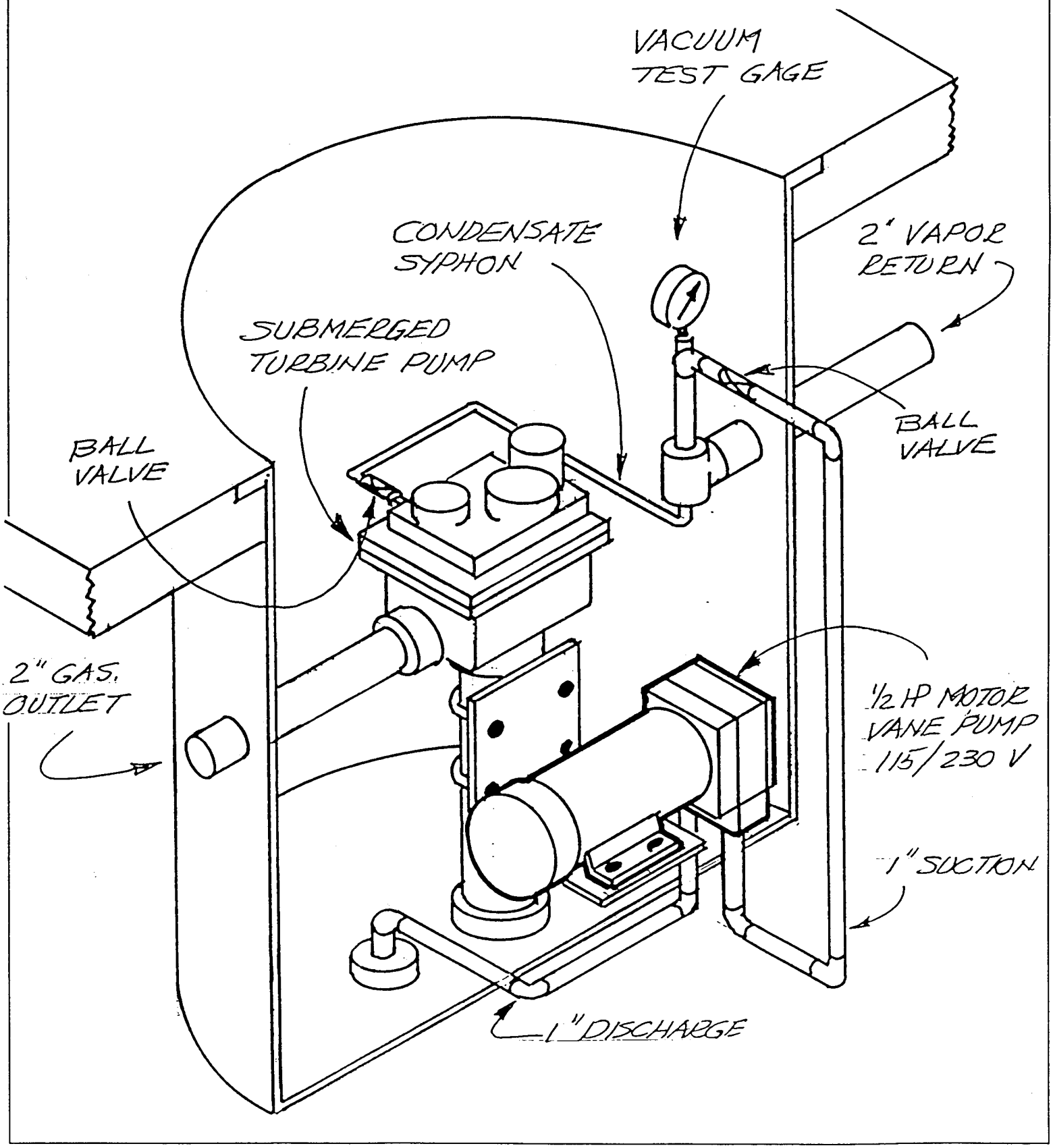Executive Order G-70-165
Figure 2B-3
VP-500 Vane Pump