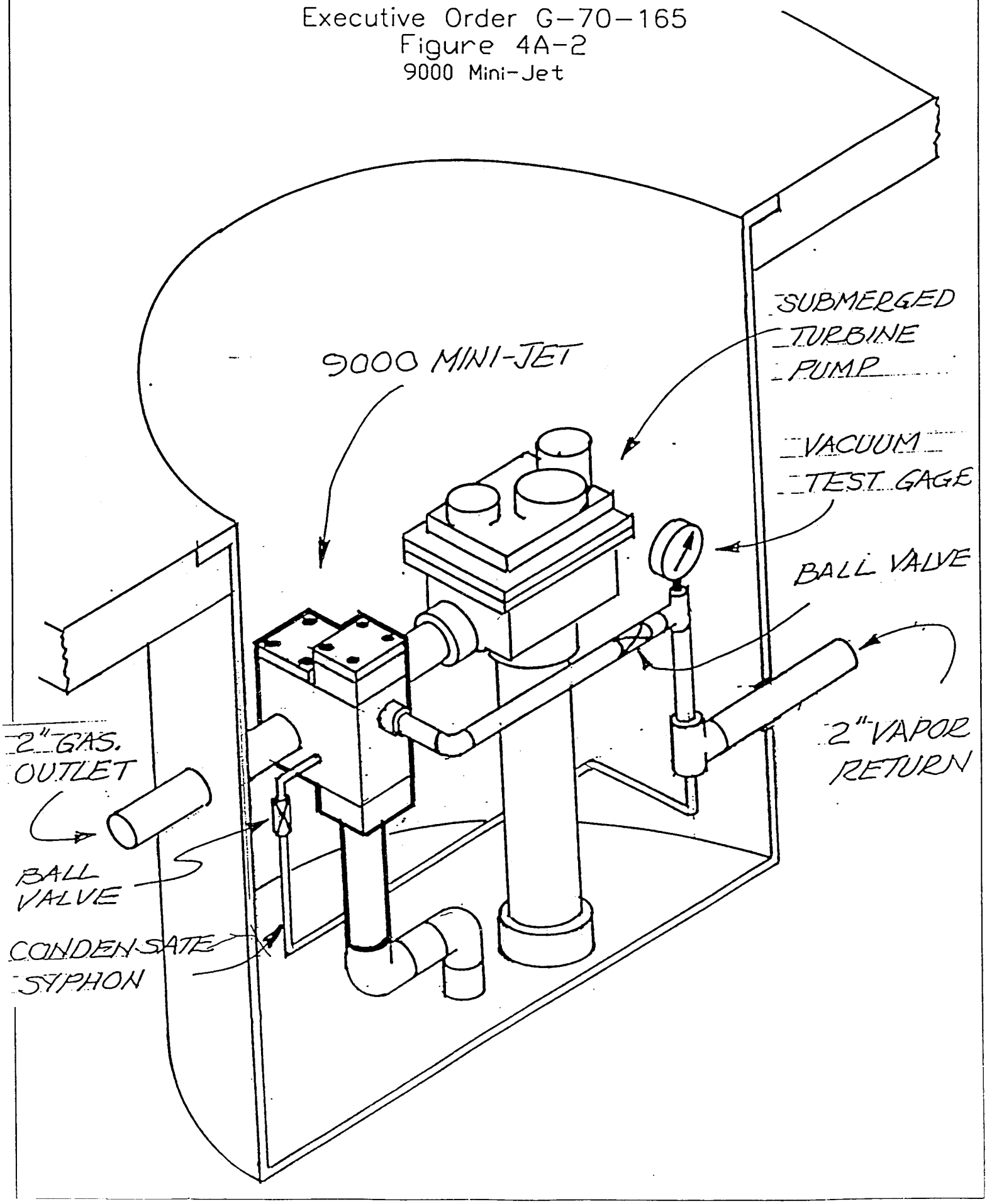Executive Order G-70-165
Figure 4A-2
9000 Mini-Jet