Executive Order G-70-179

Exhibit 2

Figure 2C-2

Typical Installation of the
Catlow ICVN-VI Phase II Vapor Recovery System
with Two-Point Phase I System

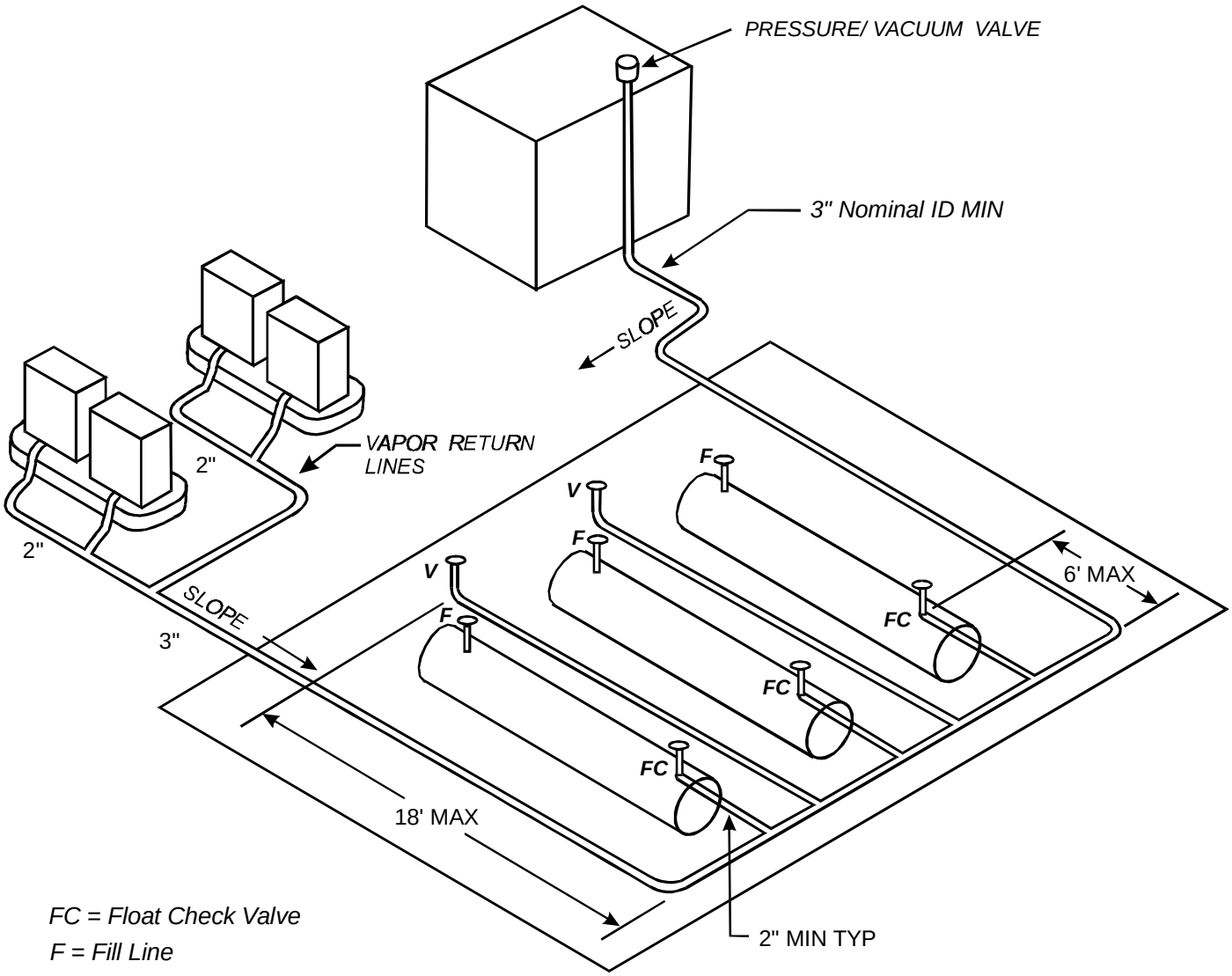

FC = Float Check Valve

F = Fill Line

V = Phase I Vapor Recovery

Note: 1. All Vapor/Vent Lines are 3" Nominal ID Minimum Except as Noted

2. Slope: 1/8" per foot Min.

1/4" per Foot Prefered

3. Maintain 2'0" Clearance Between Fill Line and Phase I Vapor Return Line to Delivery Truck