Executive Order G-70-183-AA

Exhibit 2

Figure 2A-4

Typical Installation of the
Healy Model 600 Phase I Vapor Recovery System
with Franklin Electric VP-1000 Vapor Pump

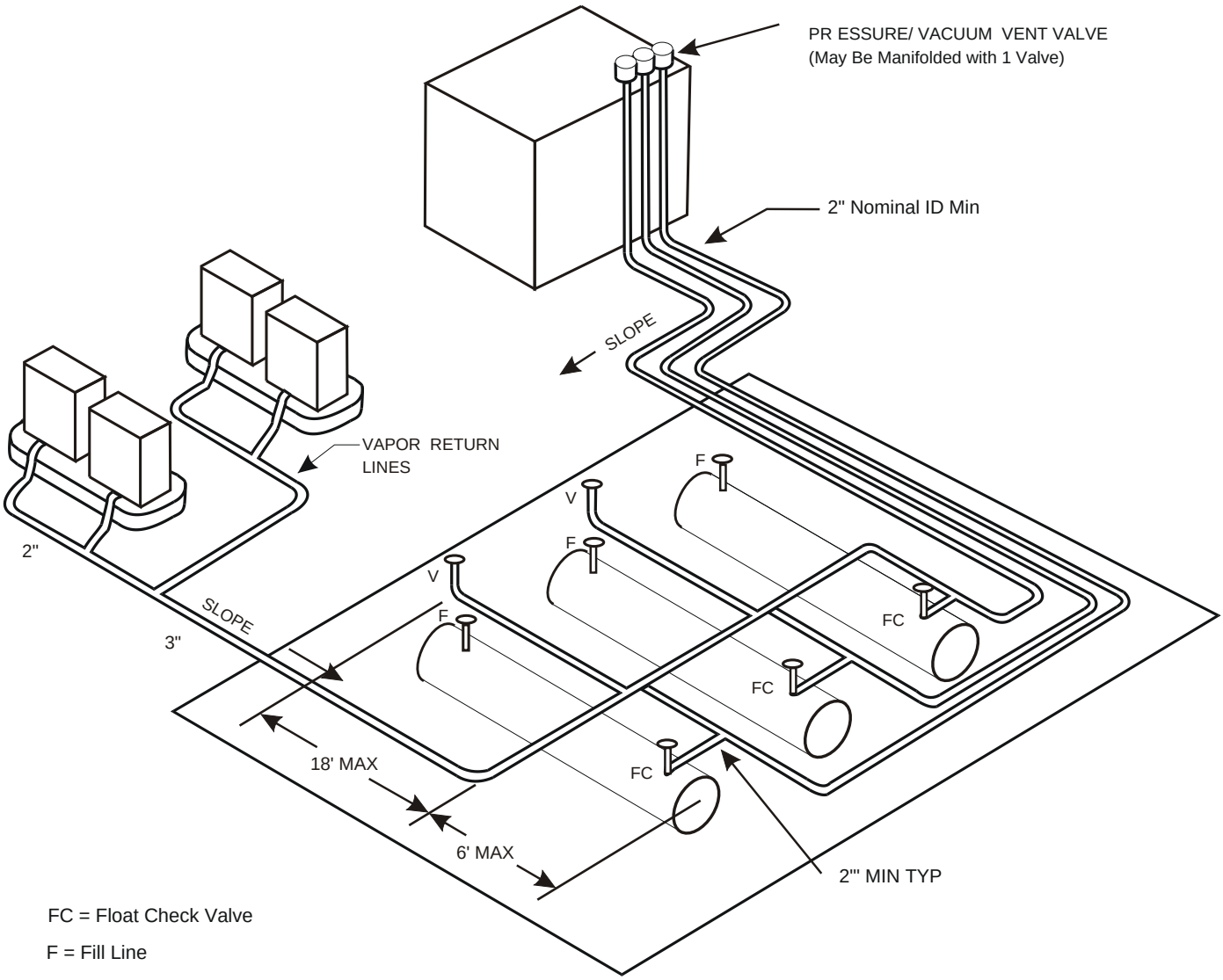

FC = Float Check Valve

F = Fill Line

V = Phase I Vapor Recovery

Note: 1. All Vapor/Vent Lines are 3" Nominal ID Minimum
Except as Noted in Exhibit 2 under Vapor Recovery Piping Configurations

2. Slope: 1/8" per foot Min.
1/4" per Foot Prefered