Executive Order G-70-183-AA

Exhibit 2

Figure 2B-2
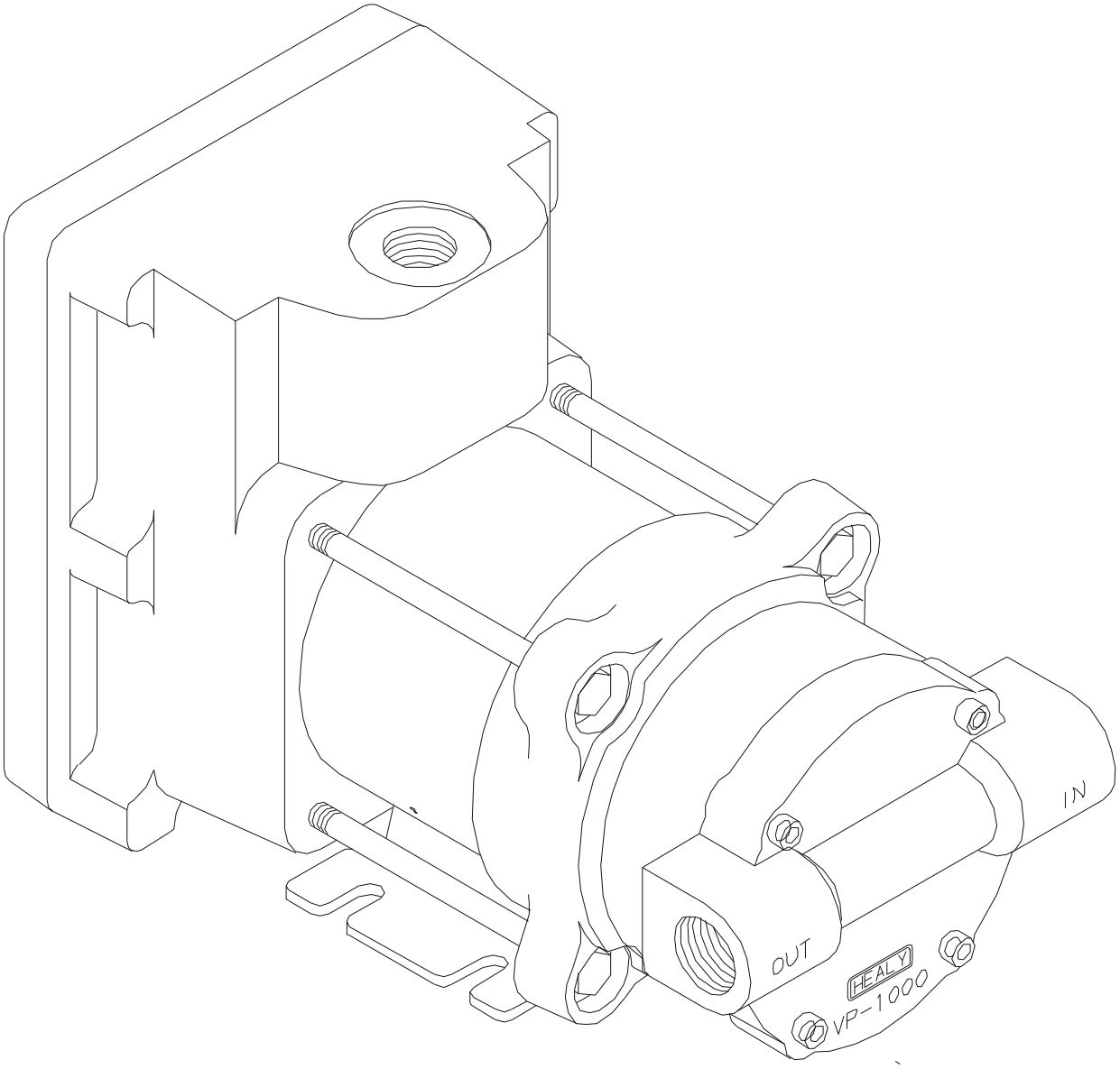
Healy/Franklin Electric VP1000 Vapor Pump