Executive Order G-70-188

Exhibit 2

Figure 2B-2

VaporVac Dispenser Types

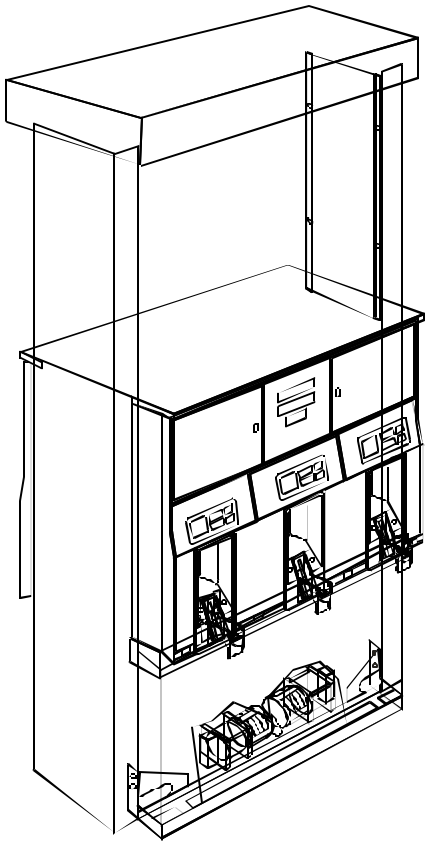

TheAdvantageMPDDispenser ProductionModels

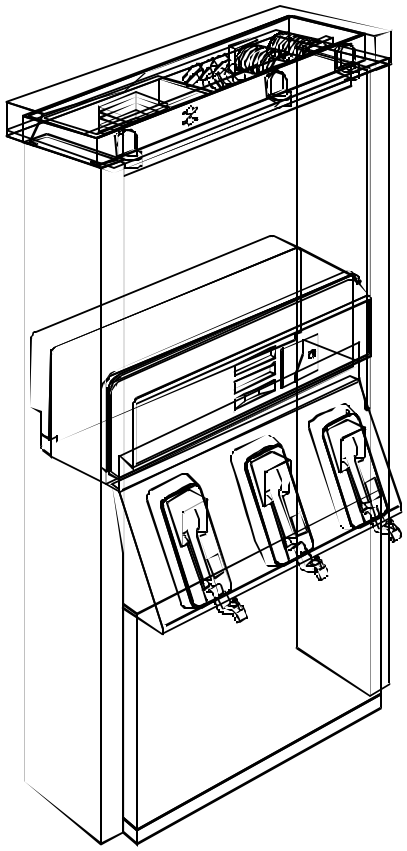

MPD 1-2/Cand3Dispenser Retrofits

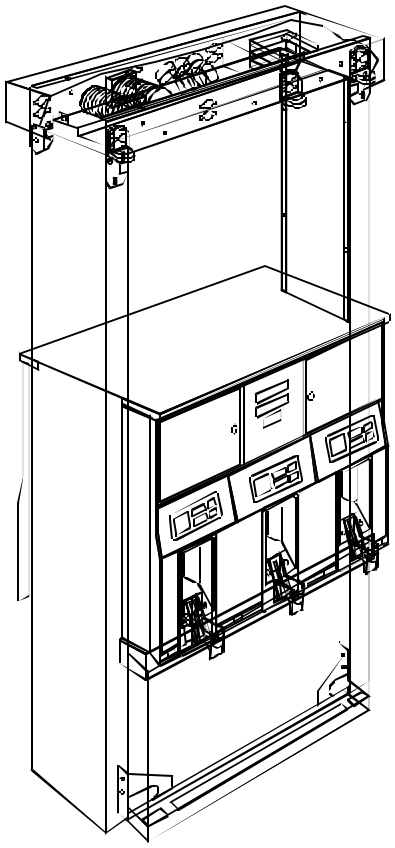

TheAdvantage MPDDispenser Retrofits