State of California
AIR RESOURCES BOARD

Executive Order G-70-33-AA

Recertification of the Hirt VCS-200 Vacuum Assist
Phase II Vapor Recovery System

WHEREAS, the Air Resources Board (the "Board") has established, pursuant to Sections 39600, 39601, and 41954 of the Health and Safety Code, certification procedures for systems designed for the control of gasoline vapor emissions during motor vehicle fueling operations ("Phase II vapor recovery systems") in its "Certification Procedures for Gasoline Vapor Recovery Systems at Service Stations" as last amended December 4, 1981 (the "Certification Procedures"), incorporated by reference in Section 94001 of Title 17, California Administrative Code;

WHEREAS, the Board has established, pursuant to Sections 39600, 39601, and 41954 of the Health and Safety Code, test procedures for determining compliance of Phase II vapor recovery systems with emission standards in its "Test Procedures for Determining the Efficiency of Gasoline Vapor Recovery Systems at Services Stations" as last amended September 1, 1982 (the "Test Procedures"), incorporated by reference in Section 94000 of Title 17, California Administrative Code;

WHEREAS, Section V.F. of the Certification Procedures states that whenever additional performance standards or other requirements for certification of Phase II vapor recovery systems are adopted, any system which is certified as of the effective date of the additional standards or requirements shall remain certified for a period of six months from such date, or until the Executive Officer has determined whether the system conforms to the additional standards or requirements, whichever occurs first;

WHEREAS, the Certification Procedures, as amended on December 4, 1981, contain new performance standards for spillage and spitback losses of gasoline during vehicle fueling in Section IV-D;

WHEREAS, Mobil Oil Company has requested that the maximum allowable gasoline dispensing rate for Phase II vapor recovery systems be increased to permit faster fuelings;

WHEREAS, the Hirt VCS-200 vacuum assist Phase II vapor recovery system has been evaluated pursuant to the Certification Procedures and Test Procedures;

WHEREAS, Section VIII.A. of the Certification Procedures provides that the Executive Officer shall issue an order of certification if he or she determines that a vapor recovery system conforms to all of the requirements set forth in paragraphs I through VII;

WHEREAS, I find that an increase in the maximum allowable gasoline dispensing rate will not affect vapor recovery system efficiency, may improve customer satisfaction by permitting faster vehicle fueling, and may improve the reliability of vapor recovery nozzle shut-off mechanisms, thus reducing the potential for gasoline recirculation;

WHEREAS, I find that the use of high-retractor or high-hang hose configurations and the use of multiplane swivels on the nozzle end of the liquid and vapor hoses for high-retractor twin hose configurations are necessary for the Hirt VCS-200 vacuum assist Phase II vapor recovery systems to meet the new performance standards for gasoline spillage and spitback;

WHEREAS, I find that it is necessary that the certification of the Hirt VCS-200 vacuum assist Phase II vapor recovery system be modified to require the use of high-retractor or high-hang hose configurations with appropriate swivel arrangements; and

WHEREAS, I find that the Hirt VCS-200 vacuum assist Phase II vapor recovery system modified as set forth in this Executive Order conforms with all the requirements set forth in paragraphs I through VII of the Certification Procedures and is at least 95 percent effective for attendant and/or self-serve use at gasoline service stations when used in conjunction with Phase I vapor recovery systems that have been certified by the Board.

NOW, THEREFORE, IT IS HEREBY ORDERED that the certification, Executive Order G-70-33-B, issued on October 16, 1981 for the Hirt VCS-200 vacuum assist Phase II vapor recovery system is hereby modified to:

1. Increase the maximum allowable gasoline dispensing rate to ten gallons per minute (gpm) for twin-hose configurations using 5/8 inch vapor hoses and 12 gpm for 3/4 inch vapor hoses. For coaxial hose configurations, the maximum allowable dispensing rate shall be eight gallons per minute;

2. Require the use of high-retractor or high-hang hose configurations including swivel arrangements, as specified in the latest revision of Executive Order G-70-52. Pursuant to Health and Safety Code Sections 41954 and 41956.1, this provision is applicable immediately for new system installations and is applicable July 26, 1986 for existing system installations.

3. On new installations, require a means to prevent failure of processor ignition due to the accumulation of water in the compressor and lines. One acceptable means is to use an automatic filter separator, available complete with retrofit installation instructions from Hirt Combustion Engineers. Local districts may approve alternative methods;

4. On new installations, require the use of Viton O-rings in the air valves and a stainless steel poppet in the pressure/vacuum valve;

5. For certified coaxial hose configurations on new installations, require the use of the Hirt 3/4 inch NPT solenoid valve or other ARB certified means to prevent vapors from flowing in the vapor hose when the dispensing unit is not in operation;

6. For twin hose configurations on new installations, replace the Hazlett HC-2 ball check valve with the Hirt 3/4 inch NPT solenoid valve or other ARB certified means to prevent vapors from flowing in the vapor hose when the dispensing unit is not in operation; and

7. Require float check valves (or other alternate equipment, design, or operating procedures acceptable to the Air Resources Board) for all manifolded piping on new installations to prevent contamination of unleaded gasoline with leaded gasoline, via vapor recovery piping during storage tank loading and unloading.

IT IS FURTHER ORDERED that this system is certified to be at least 95 percent effective in the self-serve and/or attendant use at gasoline service stations when used with a Board certified Phase I vapor recovery system. A typical piping arrangement for this system is described in Exhibit 1. All certified components are listed in Exhibit 2 or the latest revision of Executive Order G-70-52.

IT IS FURTHER ORDERED that compliance with the applicable certification requirements and rules and regulations of the Division of Measurement Standards, the State Fire Marshal's Office, and the Division of Occupational Safety and Health of the Department of Industrial Relations is made a condition of this certification.

IT IS FURTHER ORDERED that the system certified hereby shall perform in actual use with the same effectiveness as the certification test system. Compliance with this performance criterion shall be a condition of this certification, and failure to meet this criterion shall constitute grounds for revocation, suspension or modification of this certification.

IT IS FURTHER ORDERED that any alteration of the equipment, parts, design, or operation of the configurations certified hereby, is prohibited, and deemed inconsistent with this certification, unless such alteration has been approved by the undersigned or the Executive Officer's designee.

IT IS FURTHER ORDERED that the certified phase II vapor recovery system shall, at a minimum, be operated in accordance with the manufacturer's recommended maintenance intervals and shall use the manufacturer's recommended operation, installation, and maintenance procedures, if available.

IT IS FURTHER ORDERED that the certified Phase II vapor recovery system shall be performance tested during installation for ability to dispense gasoline and collect vapors without difficulty in the presence of the station manager or other responsible individual. The station manager, owner, or operator shall be provided with instructions on the proper use, maintenance, and repair of

the system, and where system components can be readily obtained. A copy of the system warranty shall also be made available to the station manager, owner, or operator.

Executed at Sacramento, California this 8th day of February, 1983.

James D. Boyd
Executive Officer

Exhibit 1

Executive Order G-70-33-AA
Hirt VCS-200 Phase II Vapor Recovery System

(See Exhibit 2 ~~and~~ latest revision of Executive Order G-70-52 for Component List by Manufacturer, Model, and State Fire Marshal Identification Number)

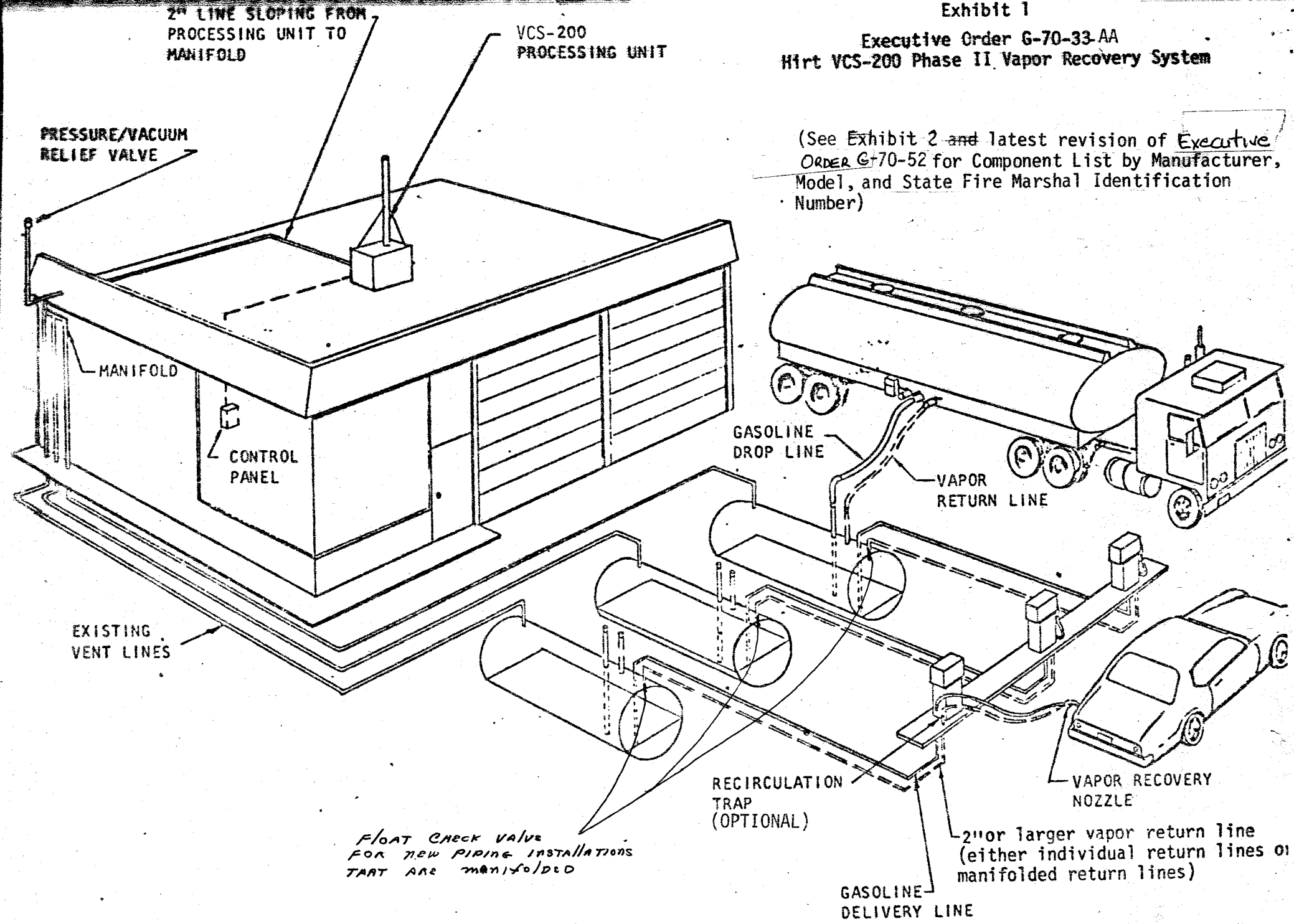

Exhibit 2

Executive Order G-70-33-AA

Hirt VCS-200 Phase II Vapor Recovery System

Component List[1/]

Item	Manufacturer/Model	State Fire Marshal Identification No.
Processing Unit	Hirt VCS-200	004:015:1
Control Panel	Hirt VCS-0030	004:015:5
Pressure/vacuum relief valve	Varec 2010-811 Hazlett H-PVB-1	005:006:1 005:017:3

1/ For additional approved components, see the latest version of Executive Order G-70-52.