State of California
AIR RESOURCES BOARD

Executive Order G-70-70-AC

Modification of Certification of the
Healy Phase II Vapor Recovery System
for Gasoline Dispensing Facilities

WHEREAS, the Air Resources Board (the "Board") has established, pursuant to Sections 39600, 39601 and 41954 of the Health and Safety Code, certification procedures for systems designed for the control of gasoline vapor emissions during motor vehicle fueling operations ("Phase II vapor recovery systems") in its "Certification Procedures for Gasoline Vapor Recovery Systems at Service Stations" as last amended December 4, 1981 (the "Certification Procedures"), incorporated by reference in Section 94001 of Title 17, California Code of Regulations;

WHEREAS, the Board has established, pursuant to Sections 39600, 39601 and 41954 of the Health and Safety Code, test procedures for determining the compliance of Phase II vapor recovery systems with emission standards in its "Test Procedures for Determining the Efficiency of Gasoline Vapor Recovery Systems at Service Stations" as last amended September 1, 1982 (the "Test Procedures"), incorporated by reference in Section 94000 of Title 17, California Code of Regulations;

WHEREAS, James W. Healy of Healy Systems, Inc., has requested certification of modifications to the Healy Phase II vapor recovery systems, including the Healy Model 400 vapor recovery nozzle and higher vacuum level setting; and

WHEREAS, the modified Healy Phase II vapor recovery system with higher vacuum level settings and associated modifications, and the Model 400 nozzle, has been evaluated pursuant to the Board's Certification Procedures and Test Procedures; and

WHEREAS, I find that the modified Healy Phase II vapor recovery system conforms with all the requirements set forth in Sections I through VII of the Certification Procedures, and results in a vapor recovery system which is at least 95 percent effective for attendant and/or self-serve use at gasoline service stations when used in conjuction with a Phase I vapor recovery system which has been certified by the Board; and

WHEREAS, Section VIII-A of the Certification Procedures provides that the Executive Officer shall issue an order of certification if he or she determines that the vapor recovery system conforms to all of the requirements set forth in Sections I through VII of the Certification Procedures.

NOW THEREFORE, IT IS HEREBY ORDERED that the certification, Executive Order G-70-70-AB, issued October 2, 1986, is hereby modified to incorporate the Healy Model 400 vapor recovery nozzle, vacuum level adjustment and associated modifications.

IT IS FURTHER ORDERED that the modified system is certified to be at least 95 percent effective in the self-serve and/or attendant use at gasoline service stations when used with a Board-certified Phase I vapor recovery system. A list of the equipment certified for use with the Healy vapor recovery system may be found in Exhibit 1. An ordering guide detailing the product codes of certified hoses, swivels and breakaways is in Exhibit 2. The specifications for the Healy System with Model 100 jet pumps are contained in Exhibit 3. The specifications for the Healy System with a central vacuum unit are contained in Exhibit 4. The Healy System vapor return leak tightness test procedure comprises Exhibit 5.

IT IS FURTHER ORDERED that the Healy vapor recovery nozzles certified herein must be capable of fueling, without the use of nozzle spout extenders, any motor vehicle that may be fueled at service stations not equipped with vapor recovery systems.

IT IS FURTHER ORDERED that compliance with the certification requirements and rules and regulations of the Division of Measurement Standards of the Department of Food and Agriculture, the State Fire Marshal's Office, and the Division of Occupational Safety and Health of the Department of Industrial Relations is made a condition of this certification.

IT IS FURTHER ORDERED that the systems certified hereby shall perform in actual use with the same effectiveness as the certification test systems. Compliance with this performance criterion shall be a condition of this certification, and failure to meet this criterion shall constitute grounds for revocation, suspension or modification of this certification.

IT IS FURTHER ORDERED that the certified Healy Phase II vapor recovery systems shall, at a minimum, be operated in accordance with the manufacturer's recommended maintenance intervals and shall use the manufacturer's recommended operation, installation, and maintenance procedures.

IT IS FURTHER ORDERED that the following requirements are made a condition of certification for any installation with a central vacuum unit (Model 8500 Multi-Jet or Model 9000 Mini-Jet) which was installed or modified to increase the vacuum level setting after July 1, 1992, or for any installation with a central vacuum unit for which the normal operating level is greater than 40" water column. The owner or operator of the installation shall conduct the leak test in Exhibit 5 of this Order at least once in each twelve month period. Test results which demonstrate that the installation is leak free as specified in Exhibit 5 shall be submitted to the local district. The local district may impose more stringent test frequency requirements or test procedures.

IT IS FURTHER ORDERED that any alteration of the equipment, parts, design, or operation of the systems certified hereby, is prohibited, and deemed inconsistent with this certification, unless such alteration has been approved by the Executive Officer or his/her designee.

IT IS FURTHER ORDERED that the Healy Phase II vapor recovery nozzles, jet pumps (Model 100 Jet Pump, Model 8500 Multi-Jet and Model 9000 Mini-Jet) and control valves shall be 100 percent performance checked at the factory including checks of proper operation of all aspects of performance.

IT IS FURTHER ORDERED that the certified Healy Phase II vapor recovery system shall be performance tested during installation for ability to dispense gasoline and collect vapors without difficulty in the presence of the station manager or other responsible individual. The station manager, owner or operator shall also be provided with instructions on the proper use of the Healy Phase II vapor recovery system, its repair and maintenance, and where system replacement and system components can be readily obtained. A copy of the Healy Phase II vapor recovery system warranty shall be made available to the station manager, owner or operator.

Executed at Sacramento, California this 23rd day of June, 1992.

James D. Boyd
Executive Officer

Attachments

Exhibit 1

Executive Order G-70-70-AC

List of Components for Healy Phase II Vapor Recovery Systems

| Item/ Model | State Fire Marshal ID | Vacuum Level Items May be Used With: (Operating Range With Vapor Flow) 15 - 30" | 30 - 40" | 60 - 80" | Comments |
|---|---|---|---|---|---|
| **Nozzles** | | | | | |
| Model 200 | 005:024:002 | X | X | | |
| Model 200(X) | 005:024:002 | | | X | "X" in serial number indicates higher setting |
| Model 400 | 005:027:010 | | | X | |
| **Vacuum Unit** | | | | | |
| Model 100 | 005:024:004 | X | | | Individual jet pumps - one per nozzle * |
| Model 8500 | 005:027:008 | | X | X | Multi-jet unit - one per station |
| Model 9000 | 005:027:009 | | | X | Mini-jet unit - one per 8 nozzles * |
| | | | | | * Capable of simultaneous operation |
| **Pressure/Vacuum Valves** (Use Required Except as Indicated by *) | | | | | |
| VAREC 2010-811-2 | | X * | X | | Pressure release setting 1.0" water column |
| Hazlett H-PVB-1-RED | | X * | X | | Pressure release setting 1.0" water column |
| Hazlett H-PVB-1-BLU | | X * | X | | Pressure release setting 2.5" water column |
| CARB certified P/V valve | | X * | X | X | Pressure setting to be at least 2.0" and not to exceed 3.0" wc; vacuum setting to be at least 1/2 oz. and not to exceed 8.0" wc. |
| **Coaxial Product/Vapor Hose** | | | | | |
| 75B (3/4") | 005:027:003 | X | X | X | Maximum hose length 13 feet. |
| | 005:027:004 | X | X | X | |
| 88B (7/8") | 005:024:005 | X | X | X | Note: See Exhibit 2 for approved codes. |
| **Hose Adapter Assemblies** | | | | | |
| CX Series | 005:024:005 | X | X | X | |
| CX6-MPD | 005:027:002 | X | X | X | |

Executive Order G-70-70-AC

List of Components for Healy Phase II Vapor Recovery Systems

| Item/ Model | State Fire Marshal ID | Vacuum Level Items May be Used With: (Operating Range With Vapor Flow) 15 - 30" | 30 - 40" | 60 - 80" | Comments |
|---|---|---|---|---|---|
| **Emergency Breakaway** | | | | | |
| Model 8701 | 005:027:001 | X | X | X | |
| **Flow Control Mechanism** | | | | | |
| CX6-VV1 | 005:027:012 | | X | X | Refer to Figure 4-A |
| CX6-VV2 | 005:027:011 | | X | X | Refer to Figure 4-A |
| Part #175 | | | X | X | Refer to Figures 4-F and 4-G |
| (Skinner Valve X5L37910 120 Volt 60 Cycle explosion-proof flow control valve) | | | | | |

Executive Order G-70-70-AC

Exhibit 2

Healy System Hose, Swivel and Breakaway
Product Codes

## ORDERING GUIDE

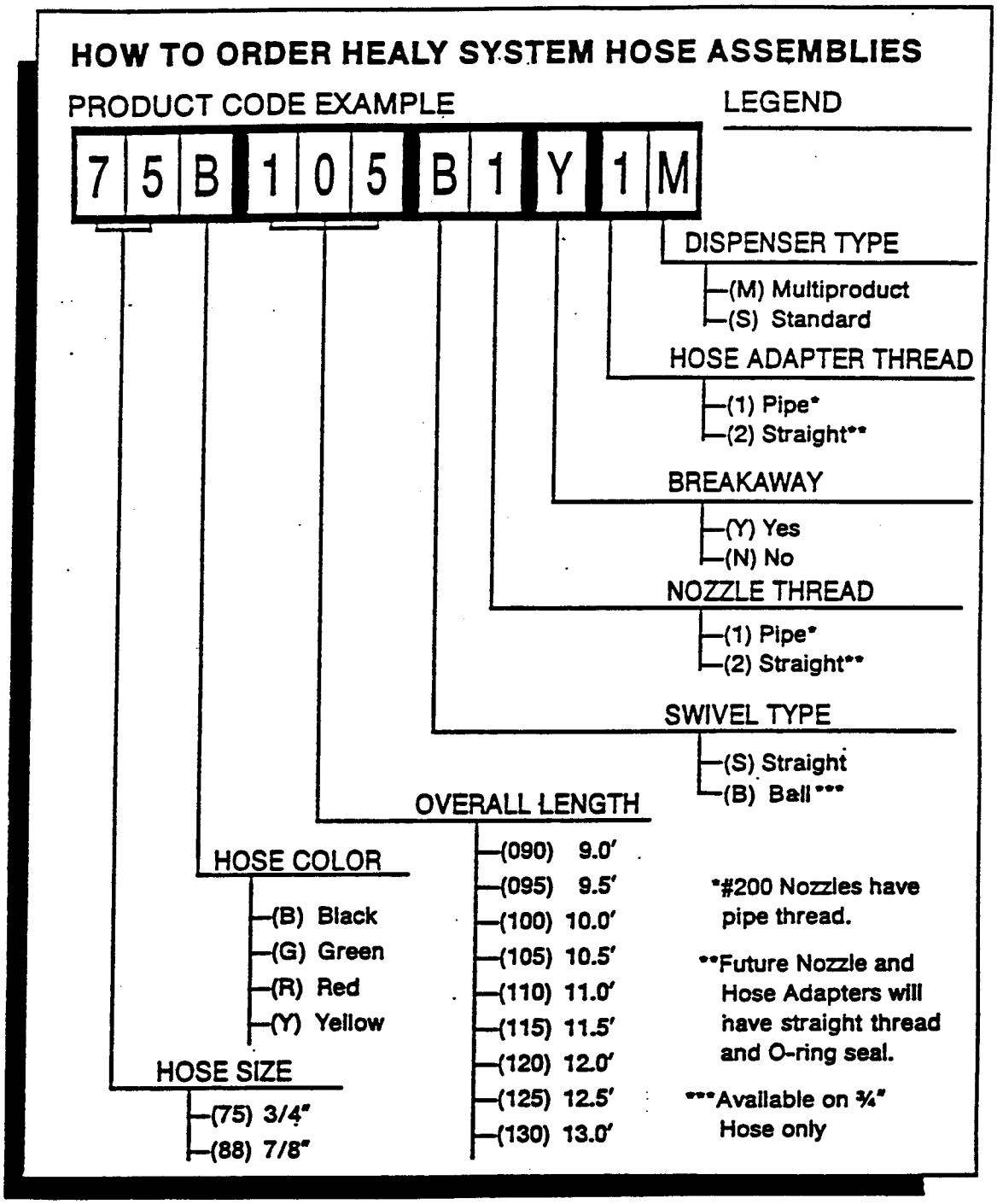


The above is an example of how to order a ¾" black hose, 10½' long, with universal swivel and a breakaway, when using a Healy #200 nozzle on a multiproduct dispenser application.

Executive Order G-70-70-AC

Exhibit 3

Specifications for the Healy System with Model 100 Jet Pumps

Drawings of typical installations of Healy vapor recovery systems with Model 100 jet pumps are shown in Figures 3-A, 3-B, 3-C, 3-D, 3-E, 3-F and 3-G

Nozzles

1. Model 200 nozzles are required with Model 100 systems. (Model 200(X) and Model 400 nozzles may not be used.)

2. Leaded and unleaded spouts are interchangeable.

3. The nozzle must shut off at a vacuum of -10 inches water column or less and at a pressure of +10 inches water column or greater.

4. Flow rate is limited to 10 gallons or less per minute.

5. The normal operating range in the nozzle boot is -1/4 inch water column to zero (atmospheric pressure). Readings taken during a fueling of at least ten gallons, excluding the first gallon and the last gallon dispensed, should be relatively stable. Fluctuations (except during the first or last gallon) indicate a defective nozzle. A vacuum of -1/2 inch or more, or a pressure of 1/4 inch or more, indicate a defective nozzle or system. (Note: vacuum or pressure levels outside of the specified range may occur when properly functioning equipment is affected by the following conditions. Gasoline dispensed into a vehicle fuel tank which is significantly warmer than the dispensed fuel may cause a vacuum of several inches. Conversely, gasoline dispensed into a vehicle tank which is significantly cooler than the dispensed fuel may temporarily cause pressure as high as 1/2 inch water column. The effects of temperature differential will be most pronounced at the beginning of the fueling operation and tend to gradually disappear toward the end of the fueling operation.)

Model 100 Jet Pump

1. A single Model 100 jet pump may not be connected to more than one vapor/liquid hose where more than one hose can be dispensing gasoline simultaneously.

2. Gasoline that flows through the jet pump and components of the jet pump must first be strained by the dispenser filter or by a filter approved by the manufacturer.

3. The Model 100 jet pumps will be set to -70" to -80" water column at the factory with zero vapor flow, and will drop to -15" to -30" when the gasoline nozzle vapor valve opens and vapor flow begins.

Coaxial Hose

1. The length of the coaxial hose shall not exceed 13 feet.

2. A swivel is required on the nozzle end of the coaxial hose. A swivel on the dispenser end of the coaxial hose is optional.

Model 143 Control Valve

1. The Healy Model 143 control valve is required on systems installed which utilize a turbine pump. Systems which utilize a suction pump do not require the Model 143 control valve.

Vapor Line

1. The vapor line connecting the Model 100 jet pump with the coaxial hose adapter shall consist of durable material listed for use with gasoline. It shall be no less than 3/8 inch inside diameter and shall be installed unobstructed.

2. The vapor tube at the top of each side of a multi-product dispenser must be manifolded such that liquid that is taken from either vapor hose cannot enter the vapor path of another hose. The vapor tube extending from the top to the bottom of a dispenser must be 5/8 inch or greater inside diameter.

3. The vapor tube from the bottom of the 5/8 inch or greater line to the jet pump shall be 3/8 inch inside diameter.

4. All vapor return lines must be sloped 1/8 inch per foot minimum. All vapor return lines must be sized to freely drain up to 2 gallons per minute from each jet pump. The vapor return lines are designed to carry liquid product and secondary containment may be required.

5. The riser must be 16 inches or longer and have an inside diameter of no less than 3/4 inch. One-inch inside diameter riser is required with multi-product dispensers. Locate the 1-inch riser with double swing connection to the 2-inch run for best mounting position inside a multi-product dispenser. Allow for 1/2-inch outside diameter copper gasoline tie-in to the regular or lowest octane riser. When a swing joint is used in a riser containing a shear connection, the riser must be rigidly supported.

6. All vapor return and vent piping shall be provided with swing joints at each tank connection, and at the base of the vent riser where it fastens to a building or other structure.

Tank Vents

1. Vent pipes shall be adequately supported throughout their length and when they are supporting weights in addition to their own, additional supports may be required; anchor to building or other structure.

2. Tank vent pipes shall terminate into the open atmosphere and the vent outlet shall be not less than 12 feet above the adjacent ground level.

A pressure/vacuum valve is optional. If a P/V valve is used, it must be Board certified to have a pressure setting of 1 to 3 inches water column and a vacuum setting of -1/2 ounce to -8 inches water column. The vent outlet or P/V valve shall vent upward and be located to eliminate the possibility of vapors accumulating or traveling to a source of ignition or entering adjacent buildings.

3. A Board or district approved leak test is recommended for all new or modified installations. (The leak test contained in Exhibit 5 of this Order is not applicable to Model 100 jet pump systems.) The local district may impose more stringent requirements.

Executive Order G-70-70-AC

Figure 3-A

Healy Vapor Recovery System with Model 100 Jet Pumps
Typical Vapor Return Piping Configuration
With Standard Dispensers

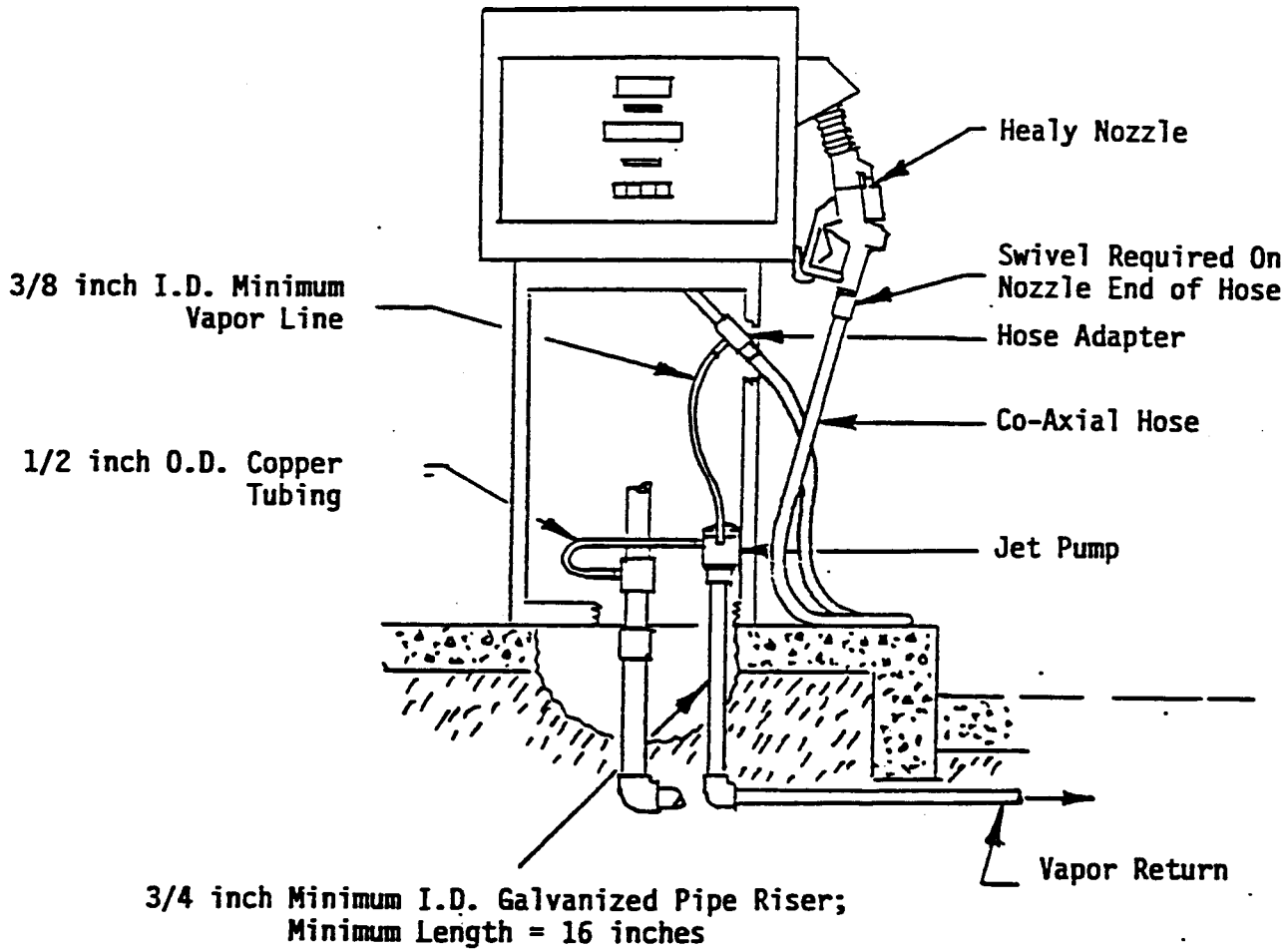

Executive Order G-70-70-AC

Figure 3-B

Healy Vapor Recovery System with Model 100 Jet Pumps
Typical Vapor Return Piping Configuration
With Standard Dispensers or Suction Pumps

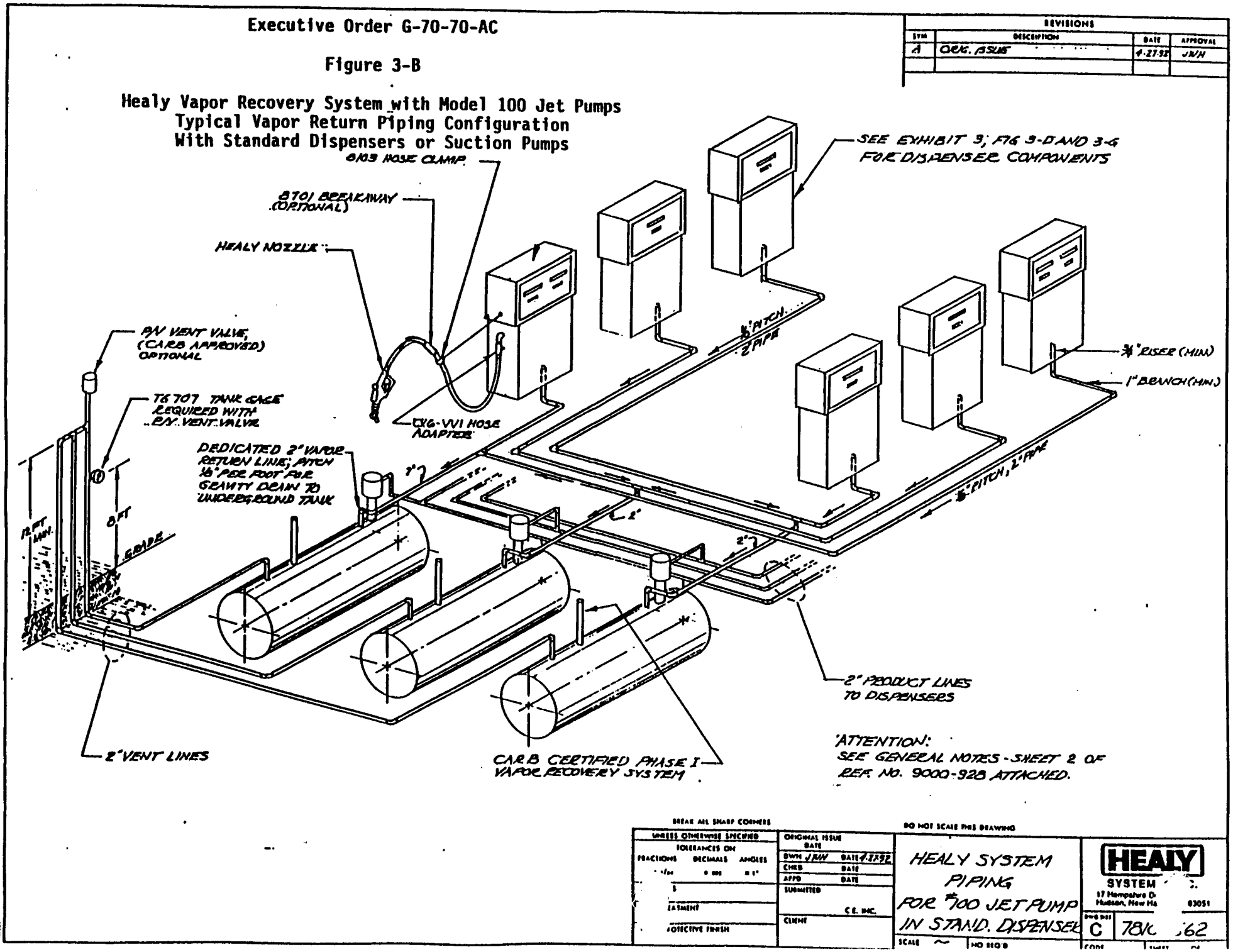

Executive Order G-70-70-AC

Figure 3-C

Healy Vapor Recovery System with Model 100 Jet Pumps
Typical Vapor Return Piping Configuration
With Multi-Product Dispensers

| REVISIONS | | | |
|---|---|---|---|
| SYM | DESCRIPTION | DATE | APVD |
| A | ORIG. ISSUE | 4-13-92 | JN |

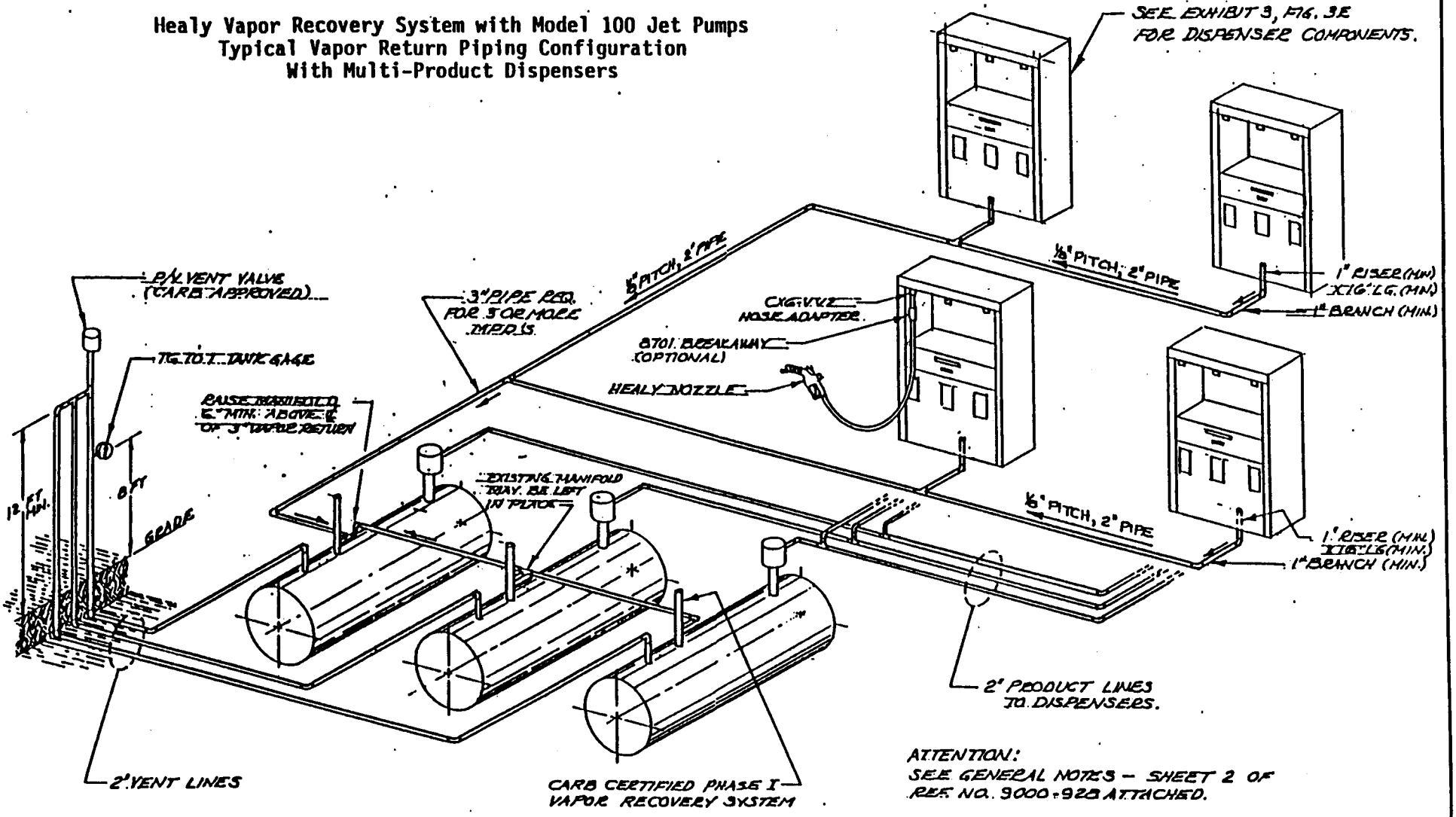


ATTENTION:
SEE GENERAL NOTES – SHEET 2 OF REF NO. 9000-928 ATTACHED.

BREAK ALL SHARP CORNERS — DO NOT SCALE THIS DRAWING

| UNLESS OTHERWISE SPECIFIED | ORIGINAL ISSUE DATE | HEALY SYSTEM PIPING FOR 100 JET PUMPS IN MPD DISPENSERS | HEALY SYSTEMS, INC. 17 Hampshire Drive Hudson, New Hampshire 03051 |
|---|---|---|---|
| TOLERANCES ON FRACTIONS DECIMALS ANGLES | DWN JN/N DATE 4-13-92 | | DWG NO C. 7810-563 |
| MATERIALS | CHKD DATE | | |
| HEAT TREATMENT | APPD DATE | | CODE SHEET 1 OF 2 |
| FINAL PROTECTIVE FINISH | SUBMITTED C.E. INC. | SCALE ~ | |
| | CLIENT | | |

# Executive Order G-70-70-AC
## Figure 3-D
## Healy Vapor Recovery System with Model 100 Jet Pumps
## Typical Installation of Dispenser Components
## With Standard Dispensers

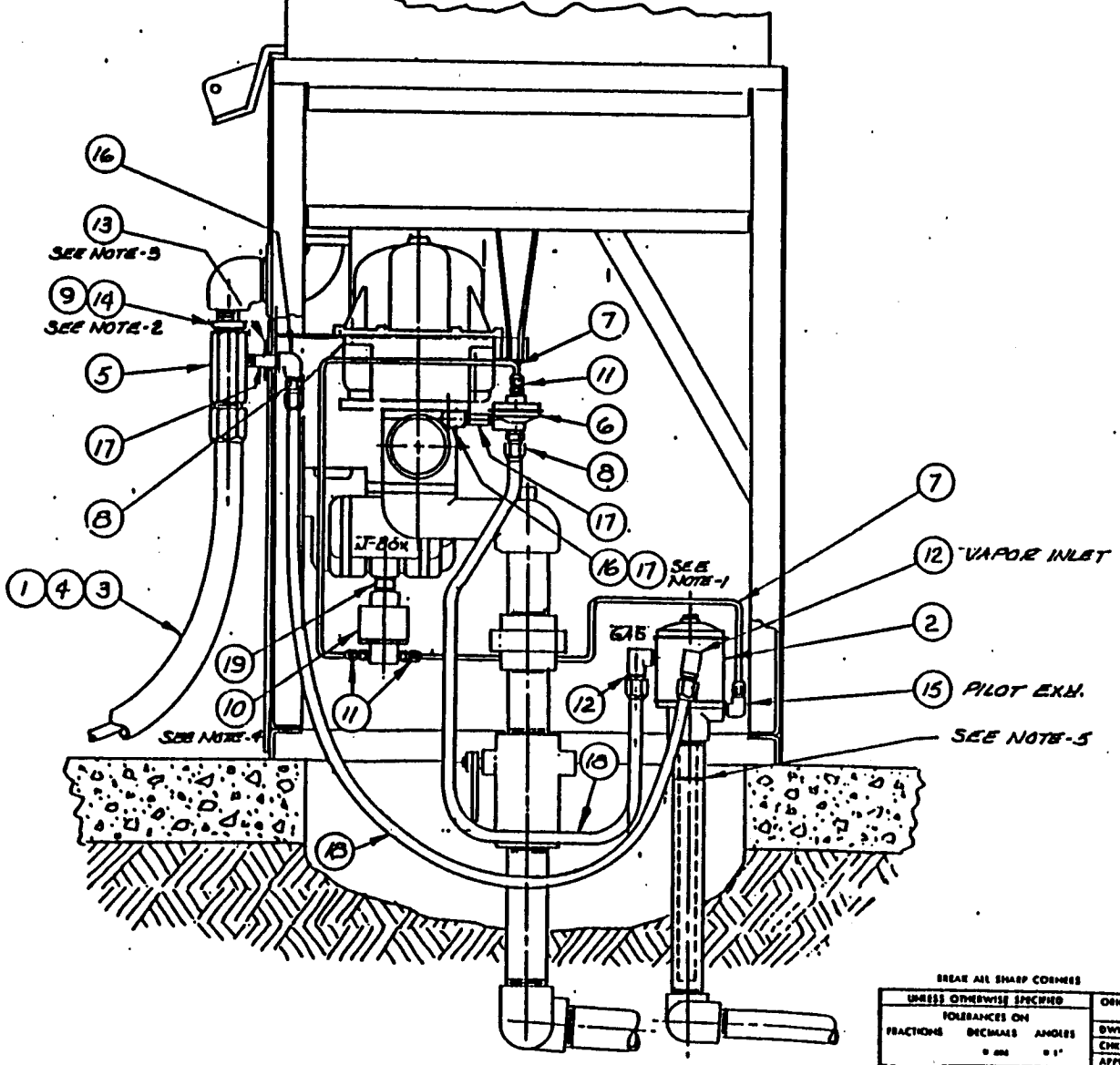


| REVISIONS | | | |
|---|---|---|---|
| SYM | DESCRIPTION | DATE | APPROVAL |
| A | REV. FOR "100 & CX6-VVI | 4-24-92 | JWH |
| | | | |

| PARTS LIST | | | |
|---|---|---|---|
| ITEM | QTY | DESCRIPTION | P/N |
| 1 | 1 | NOZZLE (NOT SHOWN) | 200 |
| 2 | 1 | JET PUMP | 100 |
| 3 | 1 | CO-AXIAL HOSE (13 FT. MAX) | 758 |
| 4 | 1 | BREAKAWAY (OPTIONAL) | 8701 |
| 5 | 1 | HOSE ADAPTER | CX6-VVI |
| 6 | 1 | CONTROL VALVE | 143 |
| 7 | 4 FT. | ½" OD COPPER TUBE, TYPE L | |
| 8 | 2 | TUBE FITTING, ¼ MPT × ½ FLARE | |
| 9 | 1. | ¾" × 1" BUSHING (GALV.) | |
| 10 | 1 | SOLENOID VALVE (120V, 60Hz) | 175 |
| 11 | 3 | TUBE FITTING, ⅛ MPT × ¼ FLARE | |
| 12 | 2 | TUBE FITTING ELL, ¼ MPT × ½ FLARE | |
| 13 | 1 | WASHER, HOLE MASK | 189 |
| 14 | 1 | ¾" CLOSE NIPPLE (GALV.) | |
| 15 | 1 | TUBE FITTING ELL, ⅛ MPT × ¼ FLARE | |
| 16 | 2 | ¼" ELBOW (GALV.) | |
| 17 | 3 | ¼" × 2½" NIPPLE (GALV.) | |
| 18 | 8 FT. | ½" O.D. COPPER TUBE, TYPE L | |
| 19 | 1 | ½" CLOSE NIPPLE | |

NOTES:
1- DRILL & TAP ¼ NPT AT LOCATION SHOWN BETWEEN FILTER & PRODUCT METER, CLEAN OUT ALL METAL CHIPS BEFORE OPERATION.
2- DO NOT BACK OFF ON PIPE THREADS TO ALIGN NIPPLE (17) WITH ¾" HOLE.
3- MAKE ¾" DIA. HOLE TO PASS THRU ⅛" NIPPLE. ATTACH WASHER (ITEM 13) BEFORE MAKING UP NIPPLE TO HOSE ADAPTER.
4- CONNECT SOLENOID VALE AT SPARE J-BOX PORT. WIRE TO OPERATE IN PARALLEL WITH EXISTING MAIN FLOW CONTROL VALVE
5- GROOVE 1" NIPPLE WITH PIPE CUTTER. LEAVE 1/32" TO 3/64" RADIAL WALL AS SHEAR SECTION. LOCATE ± 3/4" TO GROUND LINE.

BREAK ALL SHARP CORNERS — DO NOT SCALE THIS DRAWING

UNLESS OTHERWISE SPECIFIED
TOLERANCES ON
FRACTIONS DECIMALS ANGLES
FINISH
FINAL PROTECTIVE FINISH

ORIGINAL ISSUE DATE
DWN JWH DATE 4-24-92
CHKD DATE
APPD DATE
SUBMITTED C.E. INC.
CLIENT

HEALY SYSTEM INSTALLATION

CAMBRIDGE ENGINEERING, INC.

DWG SIZE C | 7010-197

# Executive Order G-70-70-AC
## Figure 3-E
## Healy Vapor Recovery System with Model 100 Jet Pumps
## Typical Installation of Dispenser Components
## With Multi-Product Dispensers

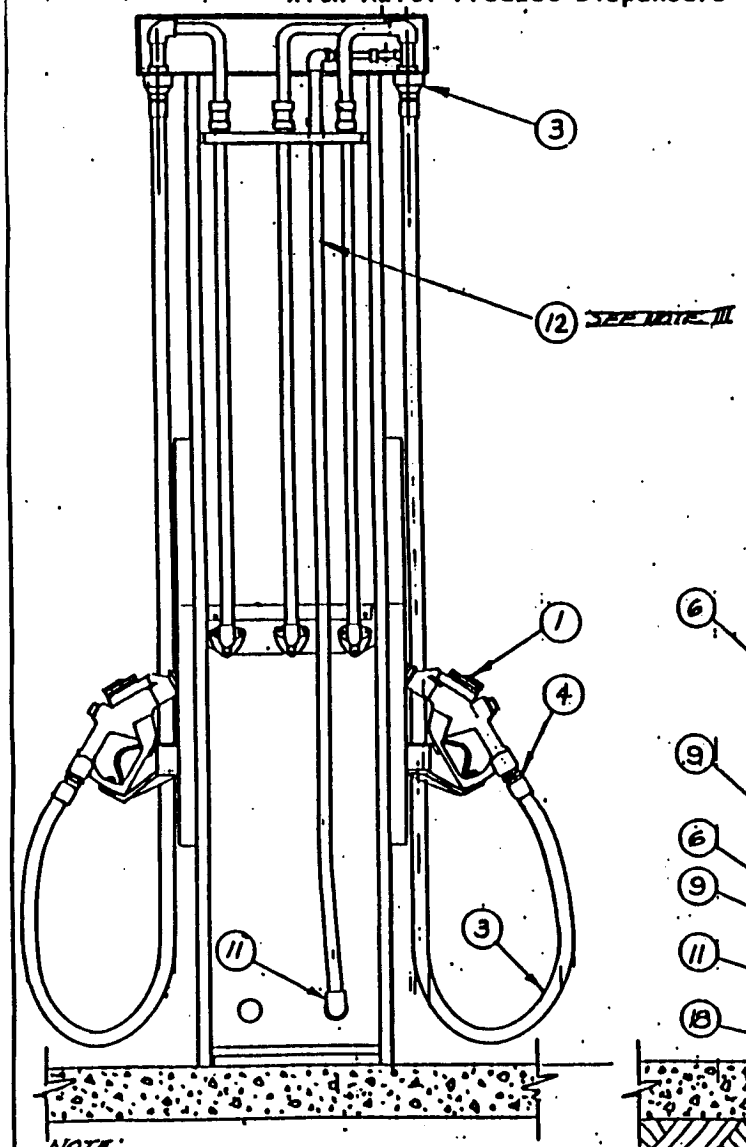


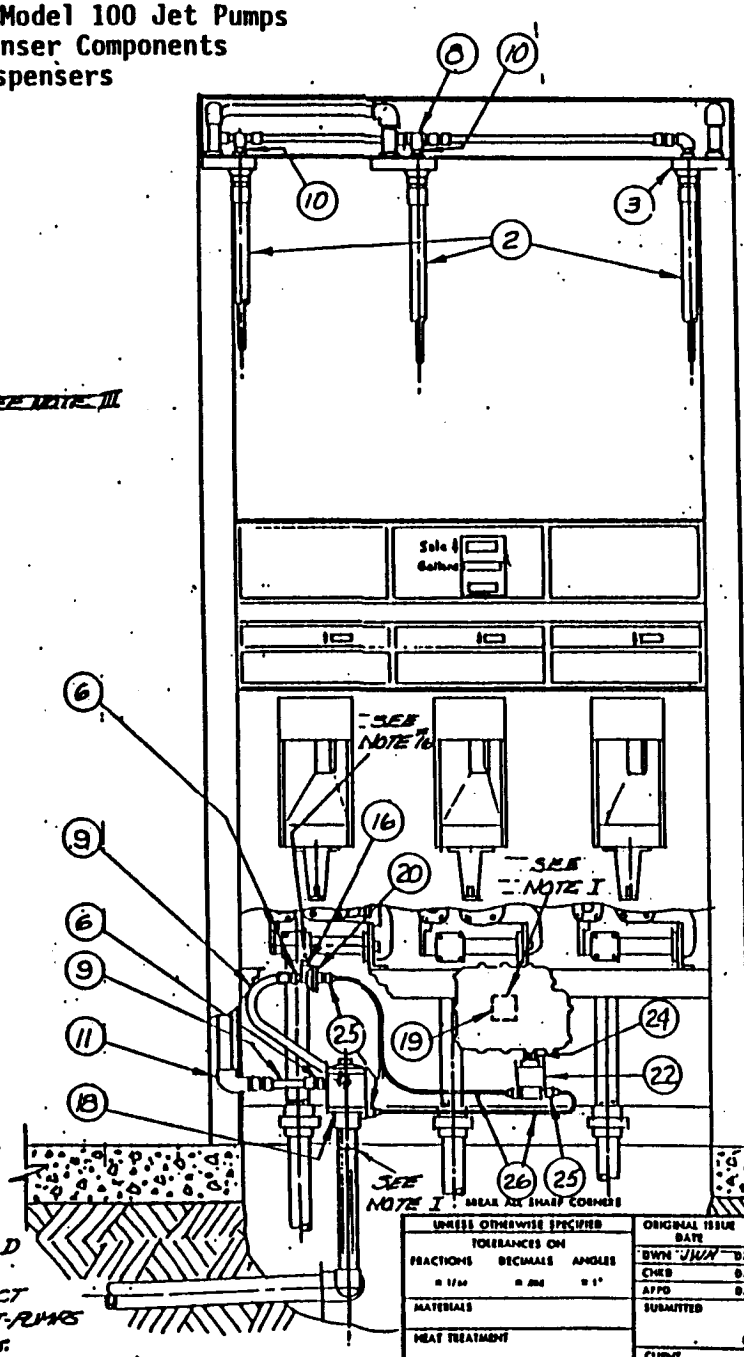


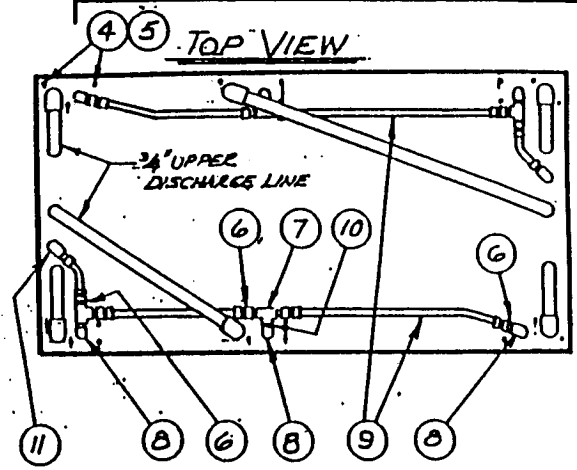


| REVISIONS | | | |
|---|---|---|---|
| SYM | DESCRIPTION | DATE | APPROVAL |
| D | GEN 2 REVISION | 5.11.87 | JWN |
| E | REV. FOR GILBARCO | 12.1.88 | JWN |

## PARTS LIST

| ITEM | QTY | DESCRIPTION | P/N |
|---|---|---|---|
| 1 | 6 | NOZZLE | 200 |
| 2 | 6 | CO-AXIAL HOSE (13 FT MAX) | 758 |
| 3 | 6 | HOSE ADAPTER | CX16 |
| 4 | 24 | 1/4-20 x 5/8 HEX HD BOLT | CX11 |
| 5 | 24 | 1/4 FLAT WASHER | CX12 |
| 6 | 20 | FLARE CONN. (1/2T x 1/2 MPT) | |
| 7 | 4 | 1/4" TEE (GALV.) | |
| 8 | 6 | 1/4" ELBOW (GALV.) | |
| 9 | 12 FT | 1/2" OD COPPER TUBE | |
| 10 | 10 | 1/4 CLOSE NIPPLE | |
| 11 | 4 | 1/4 x 1/2 REDUCING ELBOW (GALV) | |
| 12 | SEE NOTE 3 | 1/2" SCH. 40 ST'L PIPE (GALV.) | |
| 13 | | | |
| 14 | | | |
| 15 | | | |
| 16 | 2 | 1/4 x 3 NIPPLE | |
| 17 | | | |
| 18 | 2 | JET PUMP | 100 |
| 19 | 2 | RELAY | 1005 |
| 20 | 2 | CONTROL VALVE | 143 |
| 21 | | | |
| 22 | 2 | SOLENOID VALVE | 175 |
| 24 | 2 | 1/2 x 2 NIPPLE (GALV) | |
| 25 | 8 | FLARE CONNECTOR (1/4T x 1/8 MPT) | |
| 26 | 8 FT. | 1/4 OD COPPER TUBE | |
| 27 | | | |
| 28 | | | |

DO NOT SCALE THIS DRAWING

NOTE:
I- SEE INSTALLATION INSTRUCTION SHEET # 182D FOR STEP BY STEP PROCEDURE TO FIELD RETRO-FIT TYPICAL 6 HOSE MULTI-PRODUCT DISPENSER WITH HEALY SYSTEM USING JET-PUMPS
II- DO NOT KINK COPPER TUBE WHEN BENDING.
III- 1/2" PIPE BY INSTALLER (2 PCS, APPROX 7 FT LONG)

UNLESS OTHERWISE SPECIFIED
TOLERANCES ON
FRACTIONS ± 1/64 DECIMALS ± .010 ANGLES ± 1°
MATERIALS
HEAT TREATMENT
FINISH PROTECTIVE FINISH

ORIGINAL ISSUE DATE
DWN JWN DATE 2-3-88
CHKD DATE
APPD DATE
SUBMITTED
C.E. INC.
CLIENT

HEALY SYSTEM INSTALLATION
MULTI-PROD DISPENSER

CAMBRIDGE ENGINEERING, INC.

SCALE None REQ'D.
DWG SIZE C 7810-182
CODE
SHEET 1 OF 2

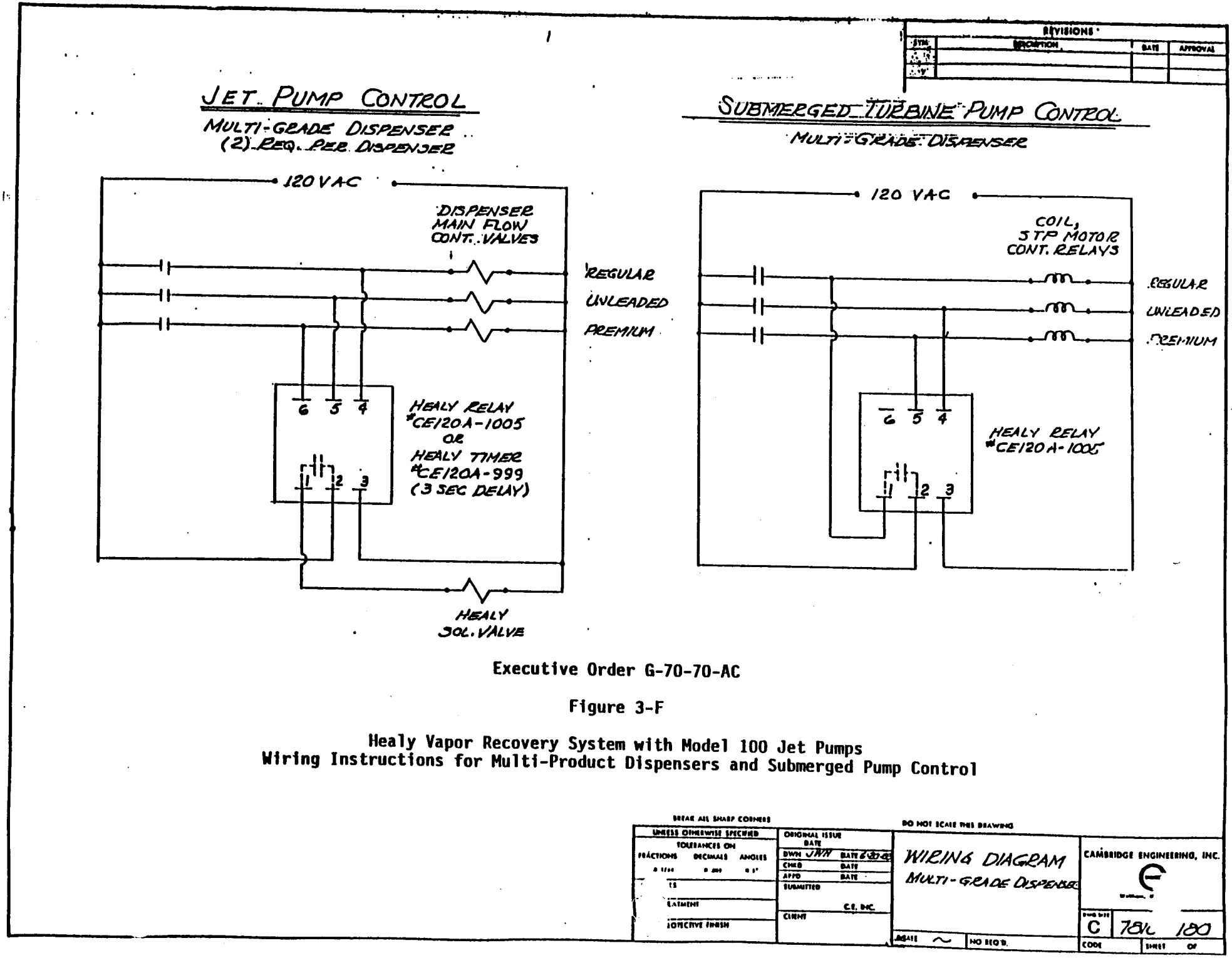


Executive Order G-70-70-AC

Figure 3-F

Healy Vapor Recovery System with Model 100 Jet Pumps
Wiring Instructions for Multi-Product Dispensers and Submerged Pump Control

Executive Order G-70-70-AC

Figure 3-G

Healy Vapor Recovery System with Model 100 Jet Pumps
Typical Installation of Dispenser Components
With Suction Pump DIspensers

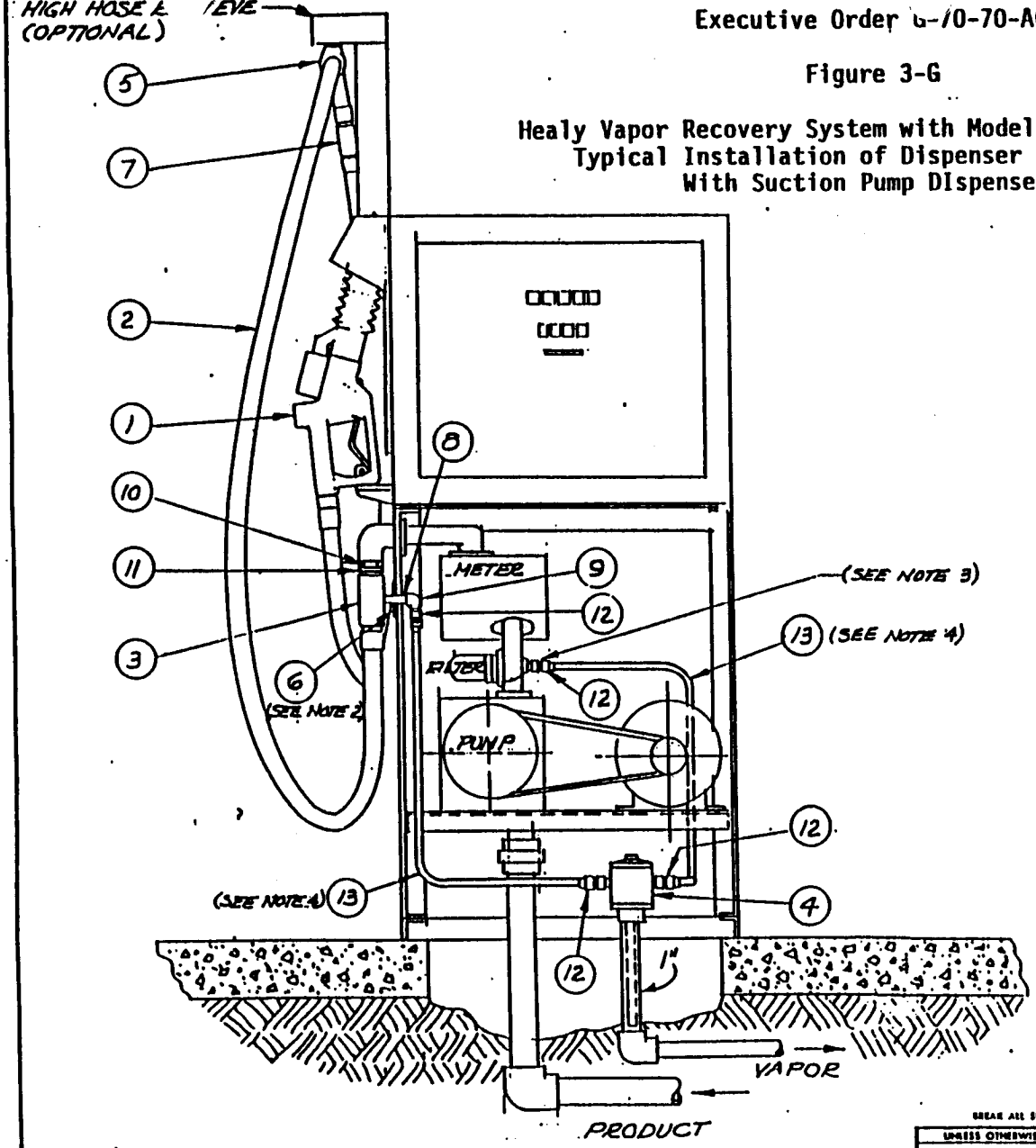


| REVISIONS | | | |
|---|---|---|---|
| SYM | DESCRIPTION | DATE | APPROVAL |
| A | REV. FOR #100 & CXG-VVI | 4-23-92 | JWH |
| | | | |

PARTS LIST

| ITEM | QTY | DESCRIPTION | P/N |
|---|---|---|---|
| 1 | 1 | NOZZLE (-01 LEAD; -02 UNLEAD) | 400 |
| 2 | 1 | CO-AXIAL HOSE (13 FT. MAX) | 758 |
| 3 | 1 | HOSE ADAPTER | CXG-VVI |
| 4 | 1 | JET PUMP | 100 |
| 5 | 1 | HOSE CLAMP | 3103 |
| 6 | 1 | WASHER, HOLE MASK | 189 |
| 7 | 1 | BREAKAWAY (OPTIONAL) | 8701 |
| 8 | 1 | 1/4" NIPPLE (GALV) | |
| 9 | 1 | 1/4" ELBOW (GALV) | |
| 10 | 1 | 3/4" CLOSE NIPPLE | |
| 11 | 1 | 3/4" x 1" BUSHING (GALV) | |
| 12 | 4 | 1/4" M.P.T. & 1/2" O.D. COPPER | |
| 13 | 8 FT | 1/2" O.D. COPPER TUBE | |

NOTES:
1- MAKE 3/8" DIA. HOLE TO PASS THROUGH 1/4" NIPPLE
2- SLIP WASHER (ITEM 6) OVER NIPPLE BEFORE MAKING UP NIPPLE TO HOSE ADAPTER (ITEM 3)
3- MAKE GASOLINE CONNECTION AT SPARE 1/4" OR LARGER PIPE PORT BETWEEN PUMP DISCHARGE & METER INLET. IF UNAVAILABLE 7/16" DRILL & 1/4"-18 NPT TAP AT SUITABLE HEAVY WALL SECTION OF PIPEWAY. REMOVE SECTION FOR DRILL & TAP OPERATION TO EXCLUDE METAL CHIPS FROM ENTERING METER.
4- DO NOT KINK 1/2" O.D. COPPER TUBE.

— REFERENCE CODES —
THIS EQUIPMENT TO BE INSTALLED IN ACCORDANCE WITH NFPA-70 AND AUTOMOTIVE & MARINE SERVICE CODE NFPA-30A.

BREAK ALL SHARP CORNERS — DO NOT SCALE THIS DRAWING

UNLESS OTHERWISE SPECIFIED: TOLERANCES ON FRACTIONS, DECIMALS, ANGLES
MATERIALS
HEAT TREATMENT
FINAL PROTECTIVE FINISH

ORIGINAL ISSUE DATE
DWN JWH DATE 1-3-90
CHKD DATE
APPD DATE
SUBMITTED C.E. INC.
CLIENT

HEALY SYSTEM INSTALLATION SUCTION PUMP WITH #100 JET PUMP

CAMBRIDGE ENGINEERING, INC.
Watertown, Massachusetts

DWG SIZE C | 7810-198
SCALE | NO REQ'D. | CODE | SHEET OF

Executive Order G-70-70-AC

Exhibit 4

Specifications for Healy System with Central Vacuum Unit
((Model 8500 Multi-Jet or 9000 Mini-Jet)

Drawings of typical installations of Healy vapor recovery systems with a central vacuum unit are shown in Figures 4-A, 4-B, 4-C, 4-D, 4-E, 4-F and 4-G.

Nozzles

1. Systems with a central vacuum unit for which the normal operating range of the vacuum level is -30" to -40" water column may be used only with Model 200 nozzles. Systems with a central vacuum unit for which the normal operating range of the vacuum level is -60" to -80" water column may be used with Model 400 or Model 200(X) nozzles. 200(X) designates Model 200 nozzles which have been modified, by the manufacturer or designated representative only, to operate properly at the higher vacuum level setting. These nozzles have an "X" stamped on the nozzle body following the serial number.

2. Leaded and unleaded nozzle spouts are interchangeable.

3. The nozzle must shut off at a vacuum of -10 inches water column or less and at a pressure of +10 inches water column or greater.

4. Flow rate is limited to 10 gallons or less per minute.

5. The normal operating range in the nozzle boot is -1/4 inch water column to zero (atmospheric pressure). Readings taken during a fueling of at least ten gallons, excluding the first gallon and the last gallon dispensed, should be relatively stable. Fluctuations (except during the first or last gallon) indicate a defective nozzle. A vacuum of -1/2 inch or more, or a pressure of 1/4 inch or more, indicate a defective nozzle or system. (Note: vacuum or pressure levels outside of the specified range may occur when properly functioning equipment is affected by the following conditions. Gasoline dispensed into a vehicle fuel tank which is significantly warmer than the dispensed fuel may cause a vacuum of several inches. Conversely, gasoline dispensed into a vehicle tank which is significantly cooler than the dispensed fuel may temporarily cause pressure as high as 1/2 inch water column. The effects of temperature differential will be most pronounced at the beginning of the fueling operation and tend to gradually disappear toward the end of the fueling operation.)

Central Vacuum Unit

1. Gasoline that flows to the Multi-Jet must be first strained by a filter approved by the manufacturer. The Mini-Jet is direct-coupled to the submerged turbine pump and it has a factory-installed strainer.

2. Any installation with a central vacuum unit which was installed after July 1, 1992, must incorporate a vapor flow control mechanism designed to allow the vapor return line from the dispenser to the central vacuum unit to open only when product dispensing is initiated. The approved vapor flow control mechanisms are listed in Exhibit 1 of this Order. Either the CX6 vapor adaptor or the flow control valve may be used to meet the requirement of this section; the use of both together is neither required nor prohibited. The CX6 vapor adaptor shall be installed as shown in Figure 4-A. The flow control valve shall be installed as shown in Figures 4-F and 4-G.

Coaxial Hose

1. The length of the coaxial hose shall not exceed 13 feet.

2. A swivel is required on the nozzle end of the coaxial hose. A swivel on the dispenser end of the coaxial hose is optional.

Model 143 Control Valve

1. The Healy Model 143 control valve is included with the Model 9000-02 Mini-Jet to prevent siphon loss when the pump is turned off. The Model 8500 Multi-Jet and the Model 9000-001 Mini-Jet do not have built-in siphons. These units may be installed only when the submerged turbine has a siphon available for gasoline condensate removal.

Vapor Line

1. All vapor return lines must be sloped 1/8 inch per foot minimum.

2. The riser must be 16 inches or longer and have an inside diameter of no less than 3/4 inch. One-inch inside diameter riser is required with multi-product dispensers. Locate the 1-inch riser with double swing connection to the 2-inch run for best mounting position inside a multi-product dispenser. Allow for 1/2-inch outside diameter copper gasoline tie-in to the regular or lowest octane riser. When a swing joint is used in a riser containing a shear connection, the riser must be rigidly supported.

3. All vapor return and vent piping shall be provided with swing joints at each tank connection, and at the base of the vent riser where it fastens to a building or other structure.

Tank Vents

1. Vent pipes shall be adequately supported throughout their length and when they are supporting weights in addition to their own, additional supports may be required; anchor to building or other structure.

2. Tank vent pipes shall be manifolded at a height not less than 12 feet above the driveway surface used for Phase I tank truck filling operations. A single vertical outlet pipe above the manifold shall be equipped with a pressure/vacuum (P/V) valve. The P/V valve shall be Board certified at a pressure setting of 2 to 3 inches water column and

a vacuum setting of -1/2 ounce (-0.8") to -8 inches water column. For systems installed before July 1, 1992, and for which the normal operating range of the vacuum level is -15" to -40" water column, a Board certified P/V valve with a pressure setting of 1 inch may be used. The outlet shall vent upward and be located to eliminate the possibility of vapors accumulating or traveling to a source of ignition or entering adjacent buildings.

3. A Board-approved or district-approved leak test is recommended for all new or modified installations. In addition to any tests which may be required by the local district, the following requirements are made a condition of certification for any installation with a central vacuum unit which was installed or modified to increase the vacuum level setting after July 1, 1992, or for any installation with a central vacuum unit for which the normal operating level is -40" water column or greater. The owner or operator of the installation shall conduct the leak test in Exhibit 5 of this Order at least once in each twelve month period. Test results which demonstrate that the installation is leak free as specified in Exhibit 5 shall be submitted to the local district. The local district may impose more stringent test frequency requirements or test procedures.

Executive Order G-70-70-AC

Figure 4-A

Healy Vapor Recovery System with Central Vacuum Unit
Typical Vapor Return Piping Configuration
With Standard or Multi-Product Dispensers

| REVISIONS | | | |
|---|---|---|---|
| SYM | DESCRIPTION | DATE | APPVAL |
| A | ORIG. ISSUE | 4-13-92 | JWH |
| | | | |

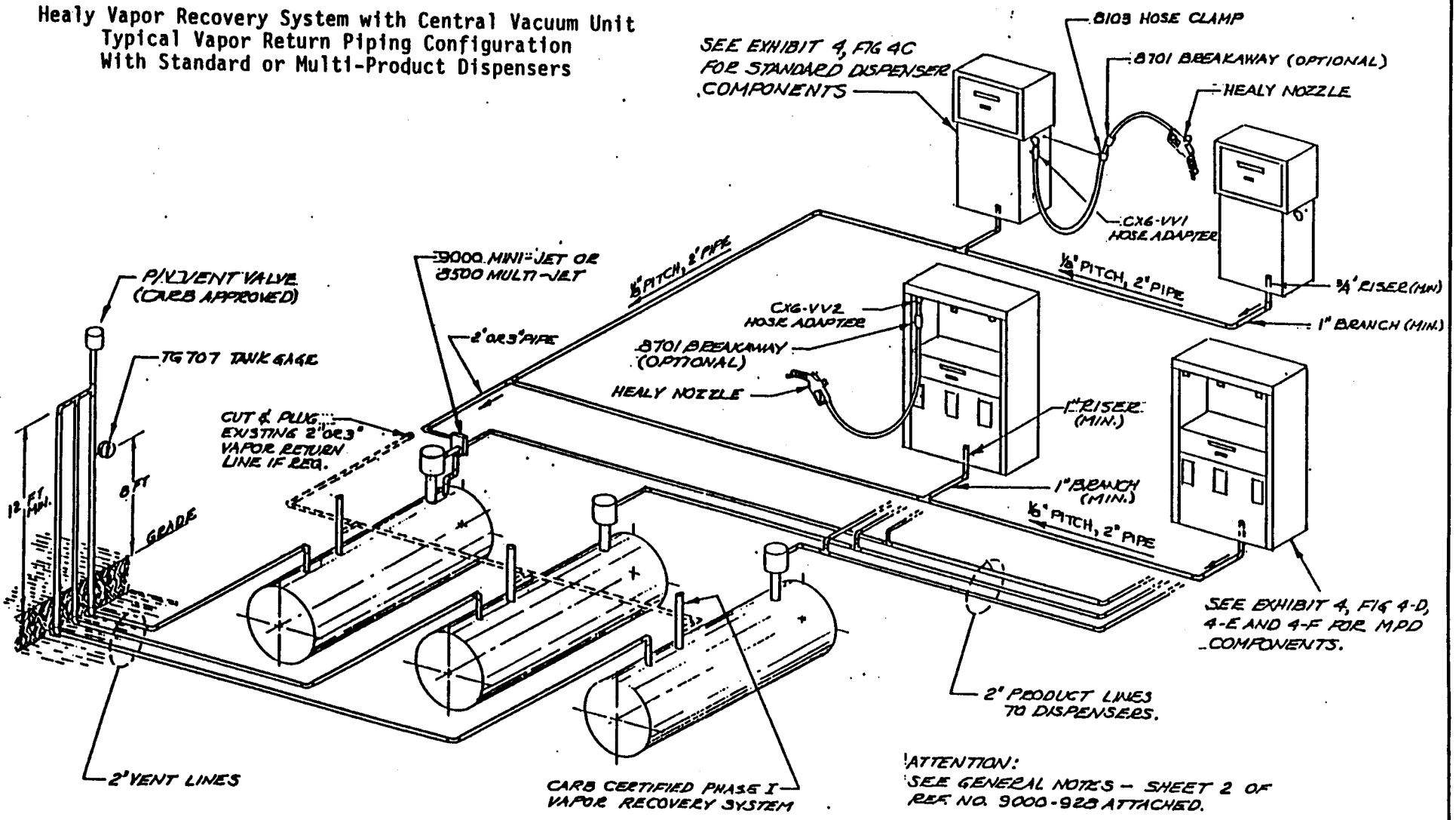


ATTENTION:
SEE GENERAL NOTES – SHEET 2 OF REF NO. 9000-928 ATTACHED.

BREAK ALL SHARP CORNERS
UNLESS OTHERWISE SPECIFIED
TOLERANCES ON
FRACTIONS DECIMALS ANGLES
MATERIALS
HEAT TREATMENT
FINAL PROTECTIVE FINISH

DO NOT SCALE THIS DRAWING
ORIGINAL ISSUE DATE
DWN JWH DATE 4-13-92
CHKD DATE
APPD DATE
SUBMITTED
C.E. INC.
CLIENT

HEALY SYSTEM PIPING

HEALY SYSTEMS, INC.
17 Hampshire Drive
Hudson, New Hampshire 03051

DWG NO C 9000-928
SCALE ~ NO REQ'D
CODE SHEET 1 OF 2

| REVISIONS | | | |
|---|---|---|---|
| SYM | DESCRIPTION | DATE | APPROVAL |
| A | ORIG. ISSUE | 4-13-92 | JWH |

## GENERAL NOTES

1. TEST ALL VAPOR PIPING FROM DISPENSER TO TANK PER HEALY VAPOR RETURN TIGHTNESS TEST PROCEDURE AND DWG. 9001-111 ATTACHED.

2. THIS DRAWING IS FOR ILLUSTRATIVE PURPOSES ONLY. THIS PLAN SHOWS A GENERAL ARRANGEMENT AND IS INTENDED AS A GUIDELINE FOR TYPICAL SINGLE, DUAL, OR MULTIPRODUCT DISPENSERS USING CENTRAL VACUUM VAPOR RECOVERY EQUIPMENT. THE GENERAL ARRANGEMENT SHALL BE MODIFIED TO SUIT INDIVIDUAL INSTALLATION AND CONDITIONS AND IS NOT TO BE USED FOR ACTUAL DESIGN AND INSTALLATION.

3. INSTALLATION SHALL BE IN COMPLIANCE WITH THE REQUIREMENTS SPECIFIED HEREIN: CALIFORNIA AIR RESOURCES BOARD REGULATIONS, CALIFORNIA STATE FIRE MARSHAL REGULATIONS, SUB-CHAPTER 11.5 AND LOCAL APCD RULES.

4. ALL PIPING AND FITTINGS SHALL BE INSTALLED IN ACCORDANCE WITH MANUFACTURER'S INSTRUCTIONS AND SPECIFICATIONS. METAL PIPE SHALL BE MINIMUM SCHEDULE 40 WELDED OR SEAMLESS STEEL PIPE PER ASTM A-53, GALVANIZED, AND FITTINGS SHALL BE 150# SCREWED MALLEABLE IRON, GALVANIZED. ALL NON-METALLIC PIPE AND FITTINGS SHALL BE UL APPROVED.

5. VAPOR RETURN LINES AND VENT LINES TO BE 2" DIAMETER PIPE UNLESS OTHERWISE NOTED. SLOPE MUST BE MINIMUM 1/8" PER FOOT, WITHOUT SAGS OR TRAPS, DRAINING UNIFORMLY TOWARD PRODUCT STORAGE TANK.

6. VENT LINES MUST BE SEPARATED BY PRODUCT.

7. ALL VAPOR PIPING TRENCHING MUST BE COMPACTED TO 90% UNDISTURBED SOIL BEFORE THE PIPES ARE INSTALLED AND BACKFILLED WITH SAND AT LEAST SIX INCHES BELOW AND ABOVE THE PIPING.

8. THE VAPOR RETURN PIPE SHOULD ENTER A SEPARATE UNDERGROUND TANK OPENING FROM THAT CONNECTED TO THE VENT PIPE OR STAGE I PIPING.

9. PRESSURE/VACUUM VALVE #802-2T OR EQUAL SHALL BE INSTALLED ON VENT PIPE.

10. VENT PIPES SHALL BE MANIFOLDED AT MINIMUM HEIGHT OF 12 FEET ABOVE DRIVEWAY LEVEL.

11. TANK GAGE SHALL BE INSTALLED 8 FEET ABOVE DRIVEWAY LEVEL.

Executive Order G-70-70-AC

Figure 4-B

Healy Vapor Recovery System with Central Vacuum Unit
Notes to Accompany Figure 4-A

BREAK ALL SHARP CORNERS

UNLESS OTHERWISE SPECIFIED
TOLERANCES ON
FRACTIONS DECIMALS ANGLES
FINAL PROTECTIVE FINISH

ORIGINAL ISSUE DATE
DWN JWH DATE 4-13-92
CHKD DATE
APPD DATE
SUBMITTED
C.E. INC.
CLIENT

DO NOT SCALE THIS DRAWING

HEALY SYSTEM PIPING GENERAL NOTES

HEALY SYSTEM INC.
17 Hampshire
Hudson, New
03051

DWG SIZE C 9000-928

Executive Order G...-70-AC

Figure 4-C

Healy Vapor Recovery System with Central Vacuum Unit
Typical Installation of Dispenser Components
With Standard Dispenser

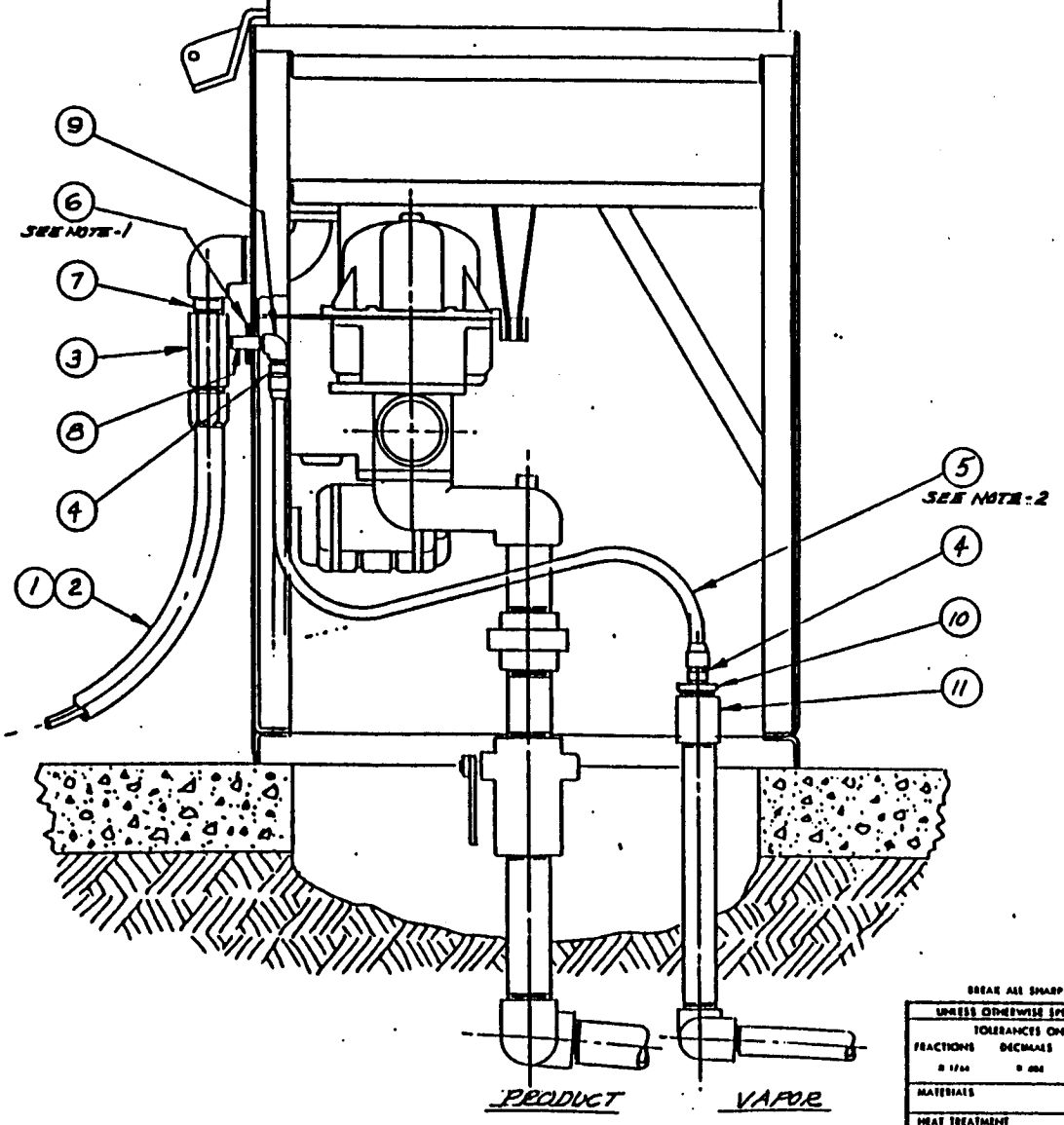


| REVISIONS | | | |
|---|---|---|---|
| SYM | DESCRIPTION | DATE | APPROVAL |
| A | ITEM 3 WAS CX-6; ITEM 5 WAS 3/8" HOSE | 11-15-91 | JWN |
| | | | |

| PARTS LIST | | | |
|---|---|---|---|
| ITEM | QTY | DESCRIPTION | P/N |
| 1 | 1 | NOZZLE (NOT SHOWN) #200(OE | #900 |
| 2 | 1 | CO-AXIAL HOSE (13 FT LG. MIN) | 75B |
| 3 | 1 | HOSE ADAPTER. | CX6-VVI |
| 4 | 2 | 1/4" MPT x 1/8" OD TUBE FLARE FIT. | |
| 5 | 4 FT | 1/2" O.D. COPPER TUBE | |
| 6 | 1 | WASHER, HOLE MASK | 189 |
| 7 | 1 | 1" CLOSE NIPPLE (GALV.) | |
| 8 | 1 | 1/4 x 2 1/2 NIPPLE (GALV.) | |
| 9 | 1 | 1/4 ELBOW (GALV.) | |
| 10 | 1 | 1/4 x 1 BUSHING (GALV.) | |
| 11 | 1 | 1" COUPLING, (GALV.) | |
| | | | |
| | | | |

NOTES: 1- MAKE 3/4" DIA. HOLE TO PASS THROUGH 1/4" NIPPLE. ATTACH WASHER (ITEM 6) BEFORE MAKING UP NIPPLE TO HOSE ADAPTER.
2- CUT & INSTALL TUBING (ITEM 5) TO AVOID ANY POSSIBILITY OF KINKING.

BREAK ALL SHARP CORNERS — DO NOT SCALE THIS DRAWING

UNLESS OTHERWISE SPECIFIED
TOLERANCES ON
FRACTIONS DECIMALS ANGLES
± 1/64 ± .005 ± 1°
MATERIALS
HEAT TREATMENT
FINAL PROTECTIVE FINISH

ORIGINAL ISSUE DATE
DWN JWN DATE 10-7-91
CHKD DATE
APPD DATE
SUBMITTED C.E. INC.
CLIENT

HEALY SYSTEM INSTALLATION
TYPICAL DISPENSER WITH CENT. VAC. UNIT

SCALE NO REQ'D.

CAMBRIDGE ENGINEERING, INC.

DWG NO C 8502-124
CODE SHEET OF

Executive Order G-70-70-AC
Figure 4-D
Healy Vapor Recovery System with Central Vacuum Unit
Typical Installation of Dispenser Components
With Multi-Product Dispensers

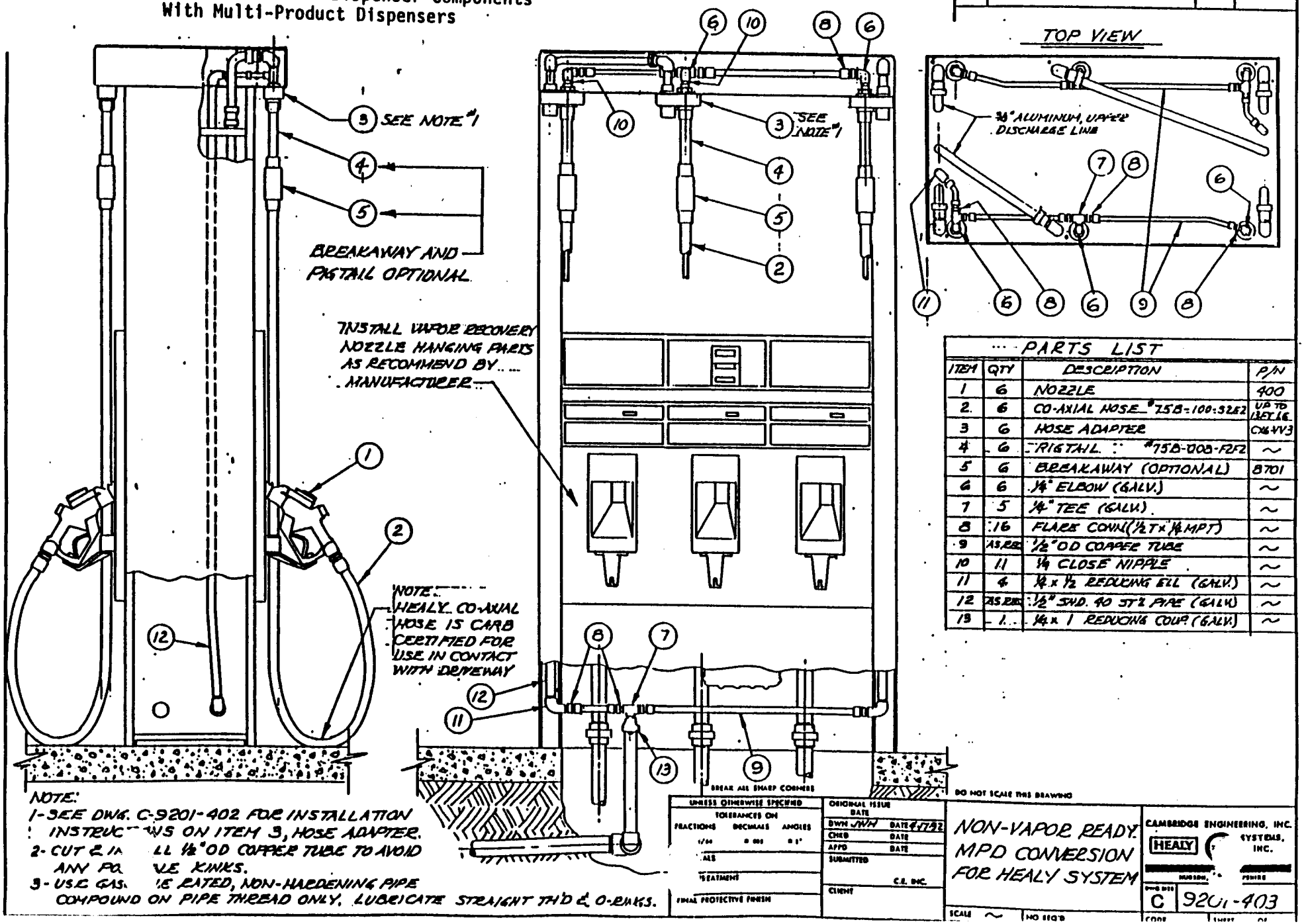

| REVISIONS | | | |
|---|---|---|---|
| SYM | DESCRIPTION | DATE | APPROVAL |
| A | ORIG. ISSUE | 4-23-92 | JWH |
| | | | |

Executive Order G-70-70-AC

Figure 4-E

Healy Vapor Recovery System with Central Vacuum Unit
Typical Installation of Dispenser Components
With Balance Vapor-Ready Multi-Product Dispensers

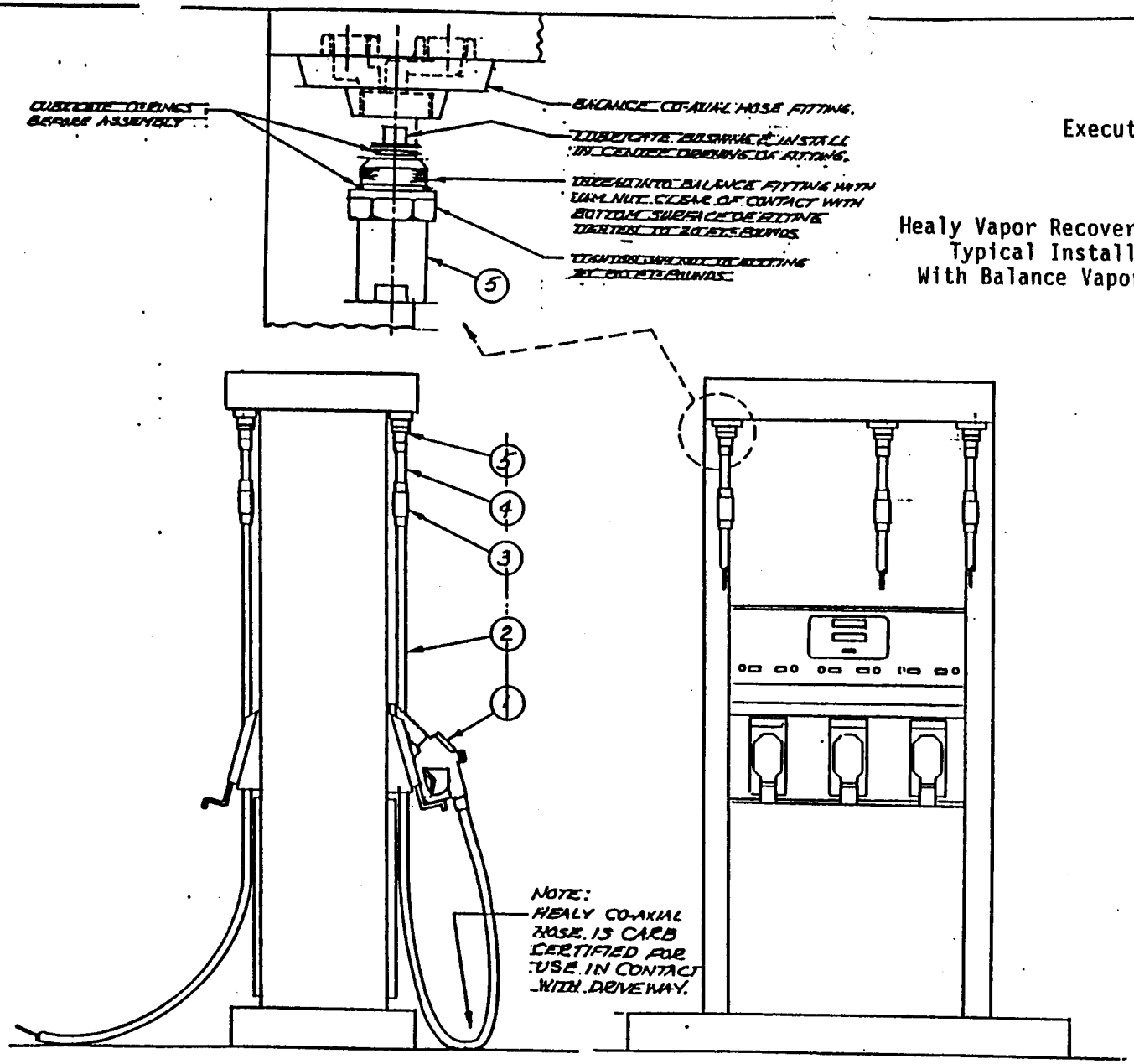


| PARTS LIST | | | |
|---|---|---|---|
| ITEM | QTY | DESCRIPTION | P/N |
| 1 | 6 | NOZZLE | 400 |
| 2 | 6 | HOSE #75B-100-32FZ | — |
| 3 | 6 | BREAKAWAY | 8701 |
| 4 | 6 | PIGTAIL | 707 |
| 5 | 6 | HOSE ADAPTER | CL6VR2 |

— REFERENCE CODES —
THIS EQUIPMENT TO BE INSTALLED IN ACCORDANCE WITH NFPA-70 AND AUTOMOTIVE & MARINE SERVICE CODE NFPA-30A.

BREAK ALL SHARP CORNERS — DO NOT SCALE THIS DRAWING

UNLESS OTHERWISE SPECIFIED
TOLERANCES ON
FRACTIONS DECIMALS ANGLES
MATERIALS
HEAT TREATMENT
FINAL PROTECTIVE FINISH

ORIGINAL ISSUE DATE
DWN JWH DATE 4-23-92
CHKD DATE
APPD DATE
SUBMITTED
C.E. INC.
CLIENT

BALANCE CONVERSION TO HEALY SYSTEM
MULTI-PRODUCT DISP

CAMBRIDGE ENGINEERING, INC.
HEALY SYSTEMS, INC.
HUDSON, NEW HAMPSHIRE

DWG SIZE C | 9201-401
SCALE — | NO REQ'D
CODE | SHEET OF

Executive Order G-70-70-AC
Figure 4-F
Healy Vapor Recovery System with Central Vacuum Unit
Typical Installation of Dispenser Components
With Multi-Product Dispensers

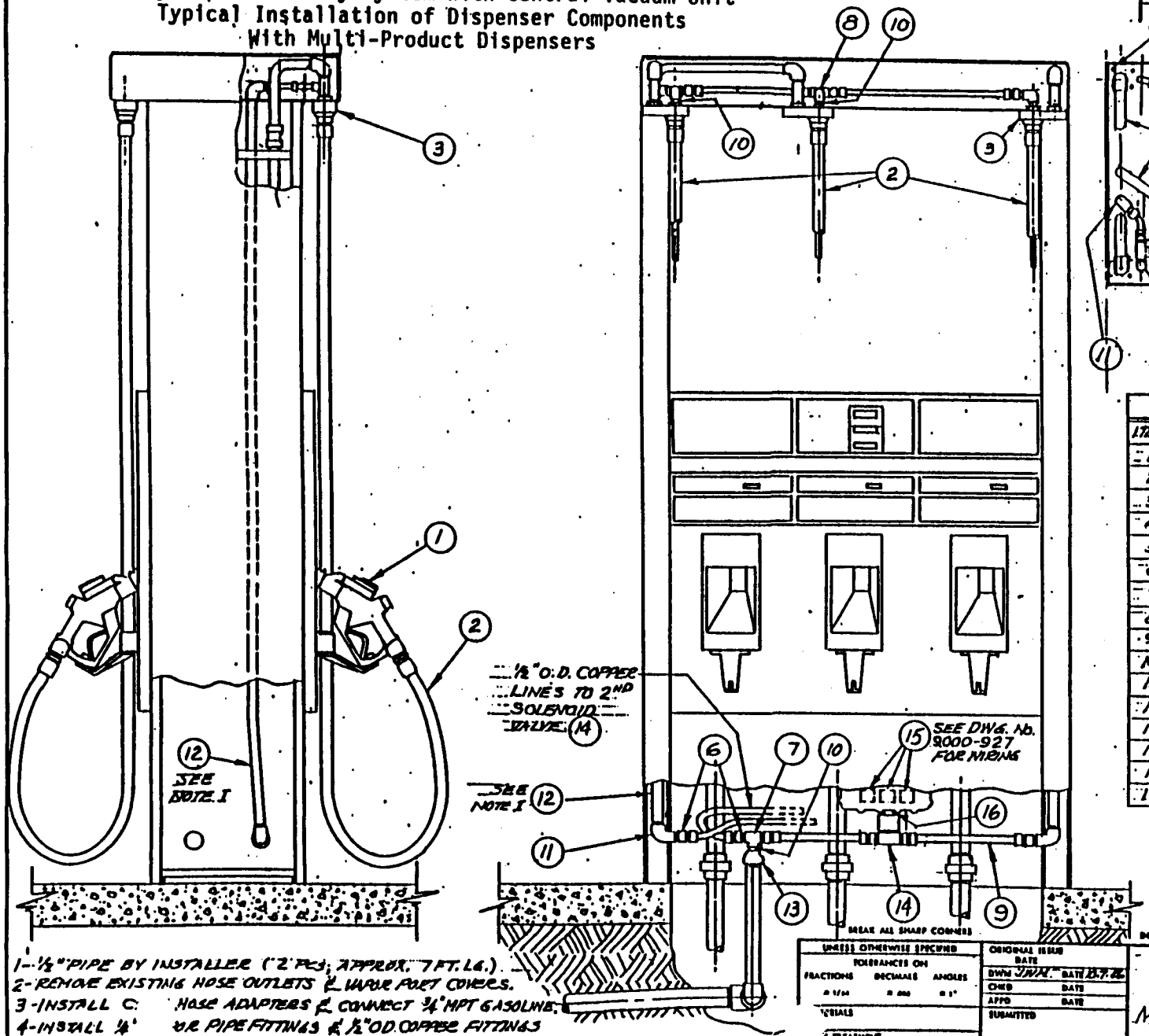


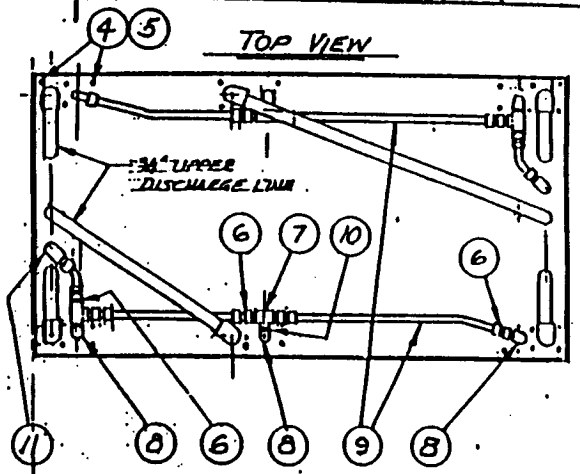


| REVISIONS | | | |
|---|---|---|---|
| SYM | DESCRIPTION | DATE | APPROVAL |
| C | ITEM 3 WAS CX6 DW | 6-21-90 | JWH |
| D | ADD: ITEM 14, 15 & 16 | 11-18-91 | JWH |

PARTS LIST

| ITEM | QTY. | DESCRIPTION | P/N |
|---|---|---|---|
| 1 | 6 | NOZZLE #200X OR | #400 |
| 2 | 6 | CO-AXIAL HOSE (13 FT. MAX.) | 75B |
| 3 | 6 | HOSE ADAPTER | CX6U |
| 4 | 24 | ¼-20 × ⅝ HEX HD BOLT | CX11 |
| 5 | 24 | ¼ FLAT WASHER | CX12 |
| 6 | 20 | FLARE CONN. (½ T × ¼ MPT) | |
| 7 | 5 | ¼" TEE (GALV.) | |
| 8 | 6 | ¼" ELBOW (GALV.) | |
| 9 | 16 FT | ½" OD COPPER TUBE | |
| 10 | 11 | ¼" CLOSE NIPPLE | |
| 11 | 4 | ¼" × ½" REDUCING ELBOW (GALV.) | |
| 12 | SEE NOTE 1 | ½" SHD. 40 ST'L PIPE (GALV.) | |
| 13 | 1 | ¼ × 1 REDUCING COUPLING (GALV.) | |
| 14 | 2 | SOLENOID VALVE | 175 |
| 15 | 6 | SOLID STATE RELAY | 939 |
| 16 | 2 | ½" NIPPLE | |

1- ½" PIPE BY INSTALLER (2 PCS; APPROX. 7 FT. LG.)
2- REMOVE EXISTING HOSE OUTLETS & VAPOR PORT COVERS.
3- INSTALL C HOSE ADAPTERS & CONNECT ¾" MPT GASOLINE.
4- INSTALL ¼" OR PIPE FITTINGS & ½" OD COPPER FITTINGS AS SHOWN, MODIFIED DO NOT RUN DIRECTLY OVER ¼" PORT IN CX6U.
5- DO NOT KIN. ½" O.D. TUBE WHEN BENDING.

BREAK ALL SHARP CORNERS

DO NOT SCALE THIS DRAWING

UNLESS OTHERWISE SPECIFIED
TOLERANCES ON
FRACTIONS DECIMALS ANGLES
MATERIALS
TREATMENT
PROTECTIVE FINISH

ORIGINAL ISSUE DATE
DWN JWH DATE 10-7-86
CHKD DATE
APPD DATE
SUBMITTED
C.E. INC.
CLIENT

HEALY SYSTEM CONVERSION
MULTI-PROD.-DISP.
CENTRAL VAC. UNIT

CAMBRIDGE ENGINEERING, INC.
HEALY SYSTEMS, INC.

DWG SIZE C 8 -125G
SCALE NO REQ'D.
CODE
SHEET 1 OF 2

# Executive Order G-70-70-AC
## Figure 4-G
## Healy Vapor Recovery System with Central Vacuum Unit
## Wiring Instructions for Multi-Product Dispensers

| REVISIONS | | | |
|---|---|---|---|
| SYM | DESCRIPTION | DATE | APPROVAL |
| A | ORIG. ISSUE | 11/15/ | JWN |
| | | | |
| | | | |

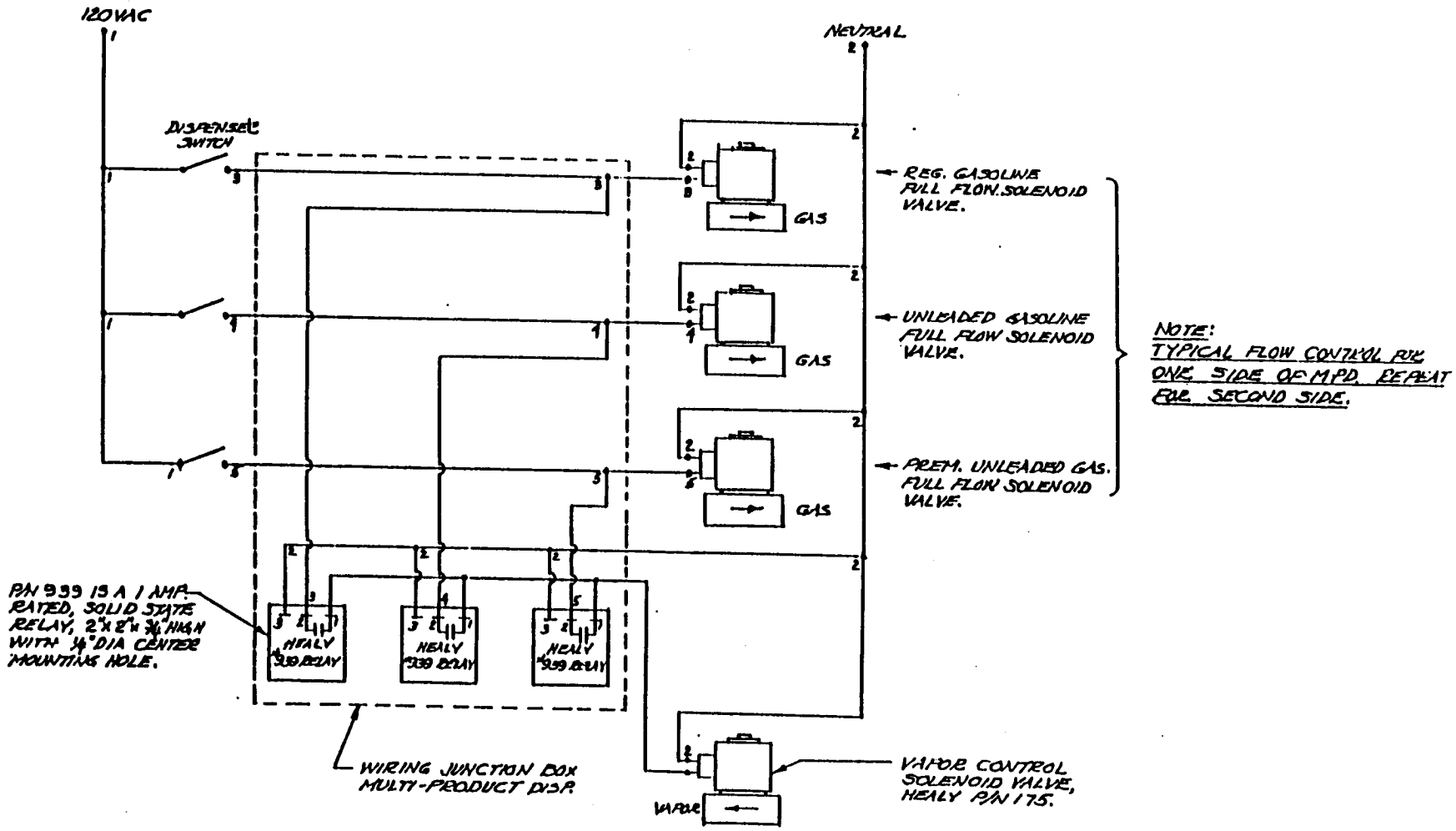


BREAK ALL SHARP CORNERS — DO NOT SCALE THIS DRAWING

| UNLESS OTHERWISE SPECIFIED | ORIGINAL ISSUE DATE | WIRING DIAGRAM FOR CONTROL OF #175 HEALY VAPOR VALVE IN MULTI-PROD. DISP | CAMBRIDGE ENGINEERING, INC. HEALY SYSTEMS, INC. |
|---|---|---|---|
| TOLERANCES ON FRACTIONS DECIMALS ANGLES | DWN JWN DATE 11-15-91 | | |
| MATERIALS | CHKD DATE | | |
| HEAT TREATMENT | APPD DATE | | |
| FINAL PROTECTIVE FINISH | SUBMITTED C.E. INC. | | |
| | CLIENT | | |
| | SCALE NO SCALE | | SIZE C 9000-927 |
| | | | CODE SHEET OF |

Executive Order G-70-70-AC

Exhibit 5

Healy System Vapor Return Leak Tightness Test Procedure

| STEP | PROCEDURE |
|---|---|
| (1) | Connect 0-100" WC gage at 1/4" plug location for vacuum test (see Dwg. 9001-111 at 1" Tee between 1" ball valve in vapor inlet line and end of 2" underground vapor return). |
| (2) | Turn on Multi-Jet/Mini-Jet by turning on any dispenser--hang nozzle to maintain Multi-Jet/Mini-Jet vacuum (all nozzles must be closed and must remain closed throughout the test). |
| (3) | Read 0-100" WC gage. |
| (4) | Close 1" ball valve in vapor inlet line and the 1/4" ball valve in syphon line and observe 0-100" WC gage with all nozzles closed: |
| | a. Gage holds steady--this means that all vapor piping from the ball valves out to each and every nozzle is tight. Proceed to Step 5. |
| | b. Gage vacuum levels fall quickly--for example, -70" WC to -50" WC in 30 seconds. Proceed to Step 7. |
| (5) | Place ½-mil-thick plastic dry cleaning bag over vent discharge to atmosphere (remove pressure/vacuum valve if installed at this station). Bag to be closed with string-tie gather on one end and elastic band sealed around vent pipe other end. (Typical dry cleaning bag volume is 18½ gallons.) |
| (6) | With bag empty and ball valves closed, turn on Multi-Jet/Mini-Jet and measure time to fill until just tight. |
| | a. If bag remains slack while Multi-Jet/Mini-Jet is running with 1" ball valve on vapor inlet and the 1/4" ball valve on the syphon line closed, there is no vacuum leak from the ball valves to the tank. Test is complete and system is operating correctly. |
| | b. If bag inflates, this indicates vapor system is leaking air in somewhere between 1" ball valve and discharge of Multi-Jet/Mini-Jet or between 1/4" ball valve and syphon connection. Find leak as follows and repair. |
| | c. With ball valves closed connect 0-100" WC pressure gage to tank test port and cap all tank vent lines. |
| | d. Remove 1/4" pipe plug from top of Multi-Jet cover or the 3/4" pipe plug from the top of the Mini-Jet. **WARNING: TO AVOID GASOLINE SPLASHBACK DO NOT SHUT OFF MULTI-JET/MINI-JET UNLESS 1/4" or 3/4" PIPE PLUG IS REPLACED.** |

e. Turn on the Multi-Jet/Mini-Jet and observe the pressure rise on tank test gage until pressure reaches +10" WC. **WARNING: DO NOT ALLOW MULTI-JET/MINI-JET TO RUN BEYOND THIS PRESSURE AS POSITIVE PRESSURE MAY INCREASE TO +75" WC.**

f. Replace 1/4" or 3/4" pipe plug then shut off the Multi-Jet/Mini-Jet. The entire tank vapor space and all piping between the tank and the ball valves, including the Multi-Jet/Mini-Jet, will be pressurized to +10" WC.

g. Using soapy-water spray, find leak and repair. If no bubbles appear the leak would be in the electrical conduit wire seal of the 8500 Multi-Jet. (The 9000 Mini-Jet and the non-solenoid 8500-NS version of the Multi-Jet do not have electrical connections.

(7) Disconnect vapor connections to 1" pipe riser under all dispensers and seal openings with rubber tubing, plugs, or other means (see Dwg. 9001-111).

(8) Open both ball valves and read 0-100" WC gage at test port in 1" vapor inlet pipe to Multi-Jet/Mini-Jet.

(9) Close both ball valves and observe 0-100" WC gage:

a. Gage steady--means vapor piping to all dispensers is tight. Proceed to Step 10.

b. Vacuum level falls--indicating piping leak. Record time required to drop 27" WC (i.e., -70" to -43") and estimate length of 2" vapor piping in entire station. Calculate leak rate:

$$\text{GPM (Leak Rate)*} = \frac{\text{Length (Feet)}}{100 \times \text{Time (Min.)}}$$

*Multiply answer by 2.25 for 3" vapor pipe size.

c. Repair leak if in excess of 1/4 GPM.

(10) Reconnect one dispenser vapor piping to its risers. Open 1" ball valve and read 0-100" WC gage.

(11) Close 1" ball valve and observe 0-100" WC gage:

a. Gage steady--means no leaks all hoses and plumbing to each nozzle this dispenser. Proceed to Step 12.

b. Gage falls from -70" WC to -50" WC in 30 seconds--large vapor leak this dispenser. Repair as required.

(12) Disconnect vapor piping from 1" riser and reseal at 1" riser under dispenser.

(13) Repeat Steps 11 and 12 for each dispenser.

**NOTE: MAKE SURE BOTH 1" BALL VALVE AND 1/4" BALL VALVE ARE OPEN FOR NORMAL SERVICE STATION OPERATION**

(14) Reconnect all dispensers to vapor return pipe risers and repeat Step 4 to verify system tightness.

Executive Order G-70-70-AC

Figure 5-A

Healy Vapor Return Leak Tightness Test Schematic

| REVISIONS | | | |
|---|---|---|---|
| SYM | DESCRIPTION | | APPROVAL |
| A | ORIG. ISSUE | | EAL |
| B | REVISED FOR MINI-JET | | JWH |
| C | ADD ¾" BALL VALVE | 7-15-91 | JWH |

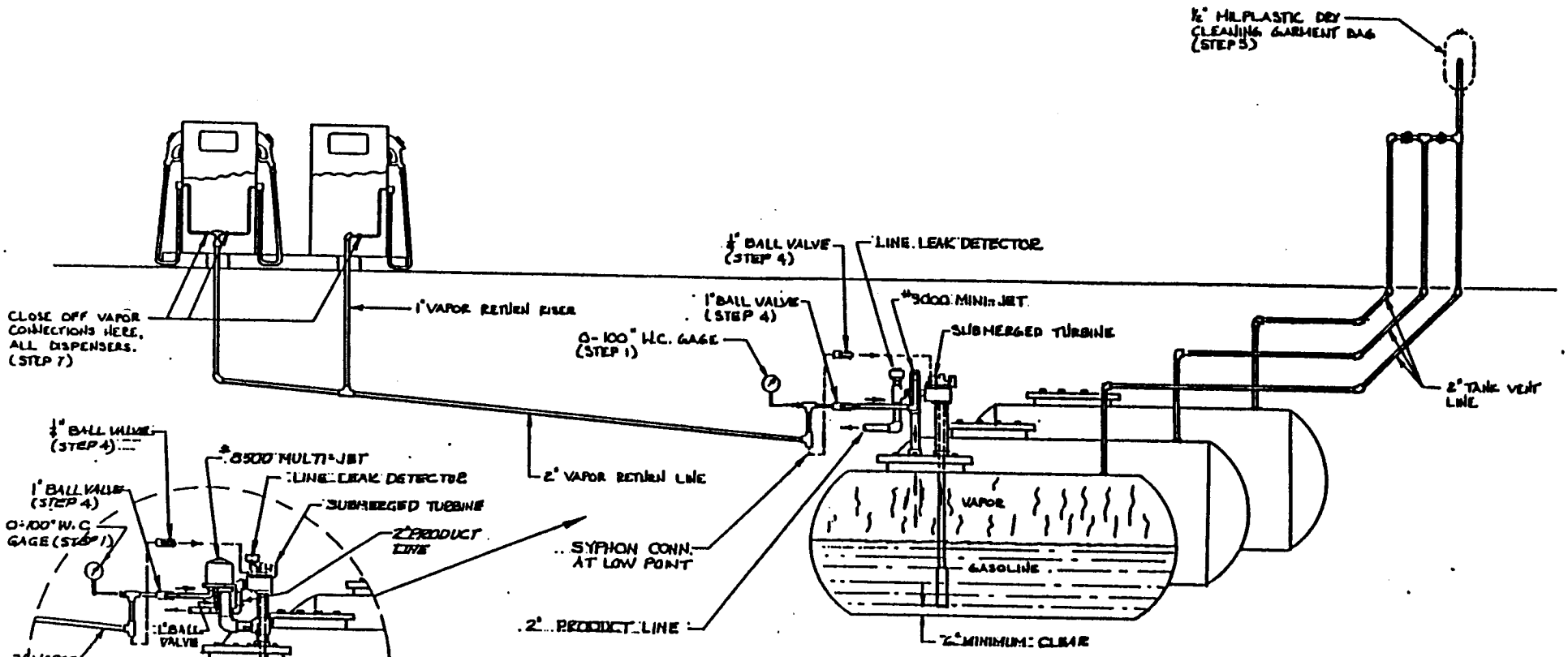


BREAK ALL SHARP CORNERS — DO NOT SCALE THIS DRAWING

| UNLESS OTHERWISE SPECIFIED TOLERANCES ON FRACTIONS DECIMALS ANGLES | ORIGINAL ISSUE DATE | VAPOR RETURN TIGHTNESS TEST SCHEMATIC | CAMBRIDGE ENGINEERING, INC. HEALY SYSTEMS, INC. |
|---|---|---|---|
| MATERIALS | DWN EAE 8AN 3-21-91 | | |
| HEAT TREATMENT | CHKD DATE | | |
| FINAL PROTECTIVE FINISH | APPD DATE | | |
| | SUBMITTED C.E. INC. | | |
| | CLIENT | SCALE N/A NO REQ'D. | DWG NO C 9001-111 |
| | | | CODE SHEET 1 OF 1 |