State of California
AIR RESOURCES BOARD

Executive Order VR-101-A
Phil-Tite Phase I Vapor Recovery System
For Gasoline Dispensing Facilities

WHEREAS, the California Air Resources Board (CARB) has established, pursuant to California Health and Safety Code sections 39600, 39601 and 41954, certification procedures for systems designed for the control of gasoline vapor emissions during the filling of underground gasoline storage tanks, in its **CP-201 Certification Procedure for Vapor Recovery Systems at Gasoline Dispensing Facilities (Certification Procedure)** as last amended June 1, 2001 incorporated by reference in Title 17, California Code of Regulations, Section 94011;

WHEREAS, CARB has established, pursuant to California Health and Safety Code sections 39600, 39601 and 41954, test procedures for determining the compliance of Phase I vapor recovery systems with emission standards;

WHEREAS, the Certification Procedure provides that the CARB Executive Officer shall issue an order of certification if he or she determines that the vapor recovery system conforms to all of the applicable requirements set forth in the Certification Procedure; and

WHEREAS, I, Michael P. Kenny, California Air Resources Board Executive Officer, find that the Phil-Tite Phase I Vapor Recovery System (Phil-Tite System) conforms with all of the requirements set forth in the Certification Procedure, and results in a vapor recovery system which is at least 98.0 percent efficient as tested pursuant to the test procedure for **TP-201.1 Volumetric Efficiency of Phase I Systems**, and shall not exceed 0.15 pounds of hydrocarbon emissions per 1,000 gallons of gasoline transferred when tested pursuant to the test procedure **TP-201.1A Emission Factor for Phase I Systems at Dispensing Facilities**;

NOW THEREFORE, IT IS HEREBY ORDERED that the Phil-Tite System is certified to be at least 98.0 percent efficient and does not exceed 0.15 pounds of hydrocarbons per 1,000 gallons of gasoline transferred. Exhibit 1 contains a list of the certified components by manufacturer and model number. Exhibit 2 contains the performance standards and specifications and maintenance instructions for verifying the compliance of the gasoline dispensing facilities (GDF) at which the Phil-Tite System is installed. Exhibit 3 contains the manufacturing specifications of the Phil-Tite System. Exhibit 4 outlines the test procedure **Pressure Integrity of Drop Tube/Drain Valve Assembly**. Exhibit 5 outlines the test procedure **Static Torque of Rotatable Phase I Adaptors**.

IT IS FURTHER ORDERED that compliance with the applicable certification requirements, rules and regulations of the Division of Measurement Standards of the Department of Food and Agriculture, the Office of the State Fire Marshal and the Division of Occupational Safety and Health of the Department of Industrial Relations is made a condition of this certification.

IT IS FURTHER ORDERED that any alteration in the equipment parts, design, installation or operation of the system certified hereby is prohibited and deemed inconsistent with this certification unless the alteration has been approved by the undersigned.

IT IS FURTHER ORDERED that each Phil-Tite System component listed in Exhibit 1, Figure 1A, shall be clearly identified by a permanent identification showing the manufacturer's name and model number.

IT IS FURTHER ORDERED that the certified Phil-Tite system shall be installed and maintained in accordance with the manufacturers recommended installation and maintenance instructions contained in this Executive Order. A copy of this Executive Order shall be maintained at each GDF where a certified Phil-Tite system is installed.

IT IS FURTHER ORDERED that the certified Phil-Tite system and/or components contained herein shall be warranted, in writing, for at least one year from the date of installation, to the ultimate purchaser and each subsequent purchaser within the warranty period. The warranty shall specify that the vapor recovery system is designed, built and equipped so as to conform at the time of original sale and installation with the applicable performance standards and performance specifications and is free from defects in materials and workmanship which could cause the vapor recovery system to fail. Copies of the manufacturer's warranty for the system and/or components shall be made available to the GDF owner/operator and a warranty tag shall be affixed as required in the Certification Procedure.

IT IS FURTHER ORDERED that the system, as installed, shall comply with the procedures and performance standards which the test installation was required to meet during certification testing. If, in the judgment of the Executive Officer, a significant fraction of installations fail to meet the specifications of this certification, the certification may be subject to modification or revocation.

IT IS FURTHER ORDERED that each Pressure/Vacuum Vent Valve (P/V Vent Valve), Spill Containment Bucket Drain Valve and Rotatable Adaptor shall be 100 percent performance tested at the factory, and shall comply with the requirements specified in Exhibit 3.

IT IS FURTHER ORDERED that the owner/operator of an installed Phil-Tite System shall successfully performance test each installation within 60-days of installation in accordance with **TP-201.3 Determination of 2 Inch H_2O Static Pressure Performance of Vapor Recovery Systems of Dispensing Facilities,** Exhibit 4 **Pressure Integrity of Drop Tube/Drain Valve Assembly**, and Exhibit 5 **Static Torque of Rotatable Phase I Adaptors**. Performance testing shall be successfully conducted at least once every 3 years following installation. Shorter time periods may be specified in accordance with local district rules and regulations. Notification of testing, and submittal of test results, shall be done in accordance with local district rules and pursuant to the policies established by that district.

IT IS FURTHER ORDERED that the certification of the Phil-Tite Phase I vapor recovery system is valid through June 30, 2005.

Executed at Sacramento, California, this 19th day of June, 2001.

Michael P. Kenny
Executive Officer

Attachments:
Exhibit 1 Phil-Tite Phase I Vapor Recovery System Equipment List
Exhibit 2 Installation, Maintenance and Compliance Specifications
Exhibit 3 Manufacturers Performance Standards and Specifications
Exhibit 4 Pressure Integrity of Drop Tube/Drain Valve Assembly
Exhibit 5 Static Torque of Rotatable Phase I Adaptors

Executive Order VR-101-A

Exhibit 1

Phil-Tite Phase I Vapor Recovery System Equipment List

Component Name	Manufacturer	Model Number
Spill Containment Bucket	Phil-Tite Phil-Tite Phil-Tite	85000 (Product) 85000-MS (Product) 85001-NV (Vapor)
Debris Bucket	Phil-Tite Phil-Tite	PP 1005 TB (Product) PP 1005 TBP (Vapor)
Rotatable Adaptors	Phil-Tite Phil-Tite	SWF-100-B (Product) SWV-101-B (Vapor)
Drop Tube	OPW EBW Emco Wheaton	61-T (various lengths) 782-204 (various lengths) A0020 (various lengths)
Dust Caps	Morrison Brothers Morrison Brothers	305C (Product) 323C (Vapor)
Pressure/Vacuum Vent Valve	Husky	4885 2-Inch Threaded
Extractor Fitting	Universal OPW EBW Emco Wheaton	V421 Series 233 Series 3XX Series A0079 Series
Ball Float Vent Valve	Universal OPW	Model 37 (various lengths) 53 VML (various lengths)
Installation and Removal Tool Kit for Rotatable Adaptors and Spill Containment Buckets	Phil-Tite	T-7043

Executive Order VR-101-A

Exhibit 2

Installation, Maintenance and Compliance Specifications

This exhibit contains the specifications for the proper installation and maintenance of the system by which compliance of the Gasoline Dispensing Facility is to be determined.

General Specifications

1. The Phil-Tite System shall be installed and maintained according to the manufacturer's specifications and demonstrate compliance with the Certification and Test Procedures **Determination of 2 Inch H_2O Static Pressure Performance of Vapor Recovery Systems of Dispensing Facilities (TP-201.3), Pressure Integrity of Drop Tube/Drain Valve Assembly (Exhibit 4)** and **Static Torque of Rotatable Phase I Adaptors (Exhibit 5).** Testing shall be successfully conducted within 60 days of installation and at least once every three years thereafter unless otherwise specified by the local district.

2. During all Phase I deliveries there shall be at least one vapor recovery connection between the cargo tank vapor recovery connection and the underground storage tank associated with each delivery.

Pressure/Vacuum Vent Valves For Storage Tank Vent Pipes

1. Vent pipes <u>may</u> be manifolded to produce a single vent outlet on which a single Pressure/Vacuum (P/V) Vent Valve is installed.

2. A maximum of 3 Pressure/Vacuum Vent Valves shall be used on any single GDF.

3. Vent pipe manifolds shall be constructed of galvanized-steel or an equivalent material that has been listed for use with gasoline. If a material other than galvanized steel is used the GDF operator shall provide a manufacturers listing demonstrating that the material is compatible for use with gasoline. An example of a vent pipe manifold, constructed of galvanized steel, is shown in Figure 3C. This example reflects only one allowable configuration (i.e., tee may be located at either left, center or right side, and more or fewer vent pipes may be manifolded together.)

4. The vent pipe manifold shall be installed at a height not less than 12 feet above the grade used for gasoline cargo tank delivery operations and shall conform to all applicable fire regulations.

5. Each P/V Vent Valve shall have permanently affixed to it a yellow or gold label with black lettering stating the positive and negative pressure settings specified below:

   Positive pressure setting: 3.0 ± 0.5 inches H_2O
   Negative pressure setting: 8.0 ± 2.0 inches H_2O

Rotatable Product and Vapor Recovery Adaptors

1. Rotatable product and vapor recovery adaptors, designed to prevent loosening or over-tightening of the adaptor on the riser pipe shall be installed in accordance with the manufacturer's recommended installation.

2. Rotatable product and vapor recovery adaptors shall maintain a minimum 360-degree rotation and average static torque not to exceed 108 pound-inch (9 pound-foot) when tested as specified in Exhibit 5.

3. The vapor adaptor poppet shall not leak when closed. The absence of vapor leaks may be verified with the use of commercial liquid leak detection solution, or by bagging, when the vapor containment space of the underground storage tank is subjected to a non-zero gauge pressure. (Note: leak detection solution will detect leaks only when positive gauge pressure exists).

Vapor Recovery and Product Adaptor Dust Caps

1. Dust caps shall be installed on all Phase I tank adaptors.

Drop Tube and Drain Valve

1. The Drop Tube and Drain Valve (Drop Tube/Drain Valve Assembly) is designed to drain liquid directly into the drop tube and is therefore isolated from the underground storage tank ullage. The leak rate of the Drop Tube/Drain Valve Assembly shall be determined by using the test method specified in Exhibit 4.

Figure 2A

Facility Compliance Specifications

Component	Test Method	Standard or Specification
Drop Tube/Drain Valve Assembly	Exhibit 4	2.00 inches H_2O at 0.17 CFH
Rotatable Phase I Adaptors	Exhibit 5	Minimum, 360-degree rotation Maximum, 108 pound-inch average static torque
UST, P/V Vent Valve, Fittings, Adaptors, and Connections	TP-201.3	2.00 inches H_2O - 5 minutes
Pressure/Vacuum Vent Valve	TP-201.2B Appendix 1	Positive Pressure: 3.0 ±0.5 inches H_2O Negative Pressure: 8.0 ±2.0 inches H_2O Leakrate: ≤ 0.05 CFH at +2.0 inches H_2O ≤ 0.21 CFH at –4.0 inches H_2O

Figure 2B

Maintenance Instructions For Phil-Tite System Components

Component	Maintenance
Product Spill Containment Bucket	Semi-Annually: Clean entire bucket and remove drain valve. Inspect all seals and replace components as needed. Upon completion, make sure bucket, valve, handle, and filter are properly aligned and adjusted.
Vapor Spill Containment Bucket	Routinely clean and inspect bucket quarterly.
Rotatable Vapor and Product Adaptors	Not Field Serviceable
Pressure/Vacuum Vent Valve	Annually inspect the P/V Vent for foreign objects without removing the P/V Vent from the vent pipe by using the following procedure: 1. Remove the screws that hold the top cover on. 2. Remove any debris that might be sitting inside the lower cover. 3. Check the drain holes in the lower cover for blockage. 4. The two (2) screens should not be removed. 5. Reinstall the top cover and retaining screws. 6. Tighten the screws firmly.

Each gasoline dispensing facility operator/owner shall keep a maintenance log on-site.

Executive Order VR-101-A

Exhibit 3

Manufacturers Performance Standards and Specifications

The performance standards and specifications contained in this Exhibit shall establish the minimum requirements by which vapor recovery components shall be manufactured, warranted, and offered for sale. These specifications shall verify the minimum parameters by which CARB shall determine compliance with certification.

Pressure/Vacuum Vent Valves For Storage Tank Vent Pipes

1. Each Pressure/Vacuum Vent Valve (P/V Vent Valve) shall be 100 percent performance tested at the factory. Each P/V vent valve shall be shipped with a card or label stating the performance specifications listed below, and a statement that the valve was tested to, and met, these specifications.

    a. The pressure settings for the P/V Vent
    Positive pressure setting of 3.0 ± 0.5 inches H_2O.
    Negative pressure setting of 8.0 ± 2.0 inches H_2O.

    b. The leak rate for each P/V Vent Valve, including connections, does not exceed:
    0.05 CFH at 2.0 inches H_2O.
    0.21 CFH at –4.0 inches H_2O.

2. Each P/V Vent Valve shall have permanently affixed to it a yellow or gold label with black lettering listing the positive and negative pressure settings specified above.

Spill Containment Bucket and Drain Valves

1. Spill containment buckets and all internal components contained within a spill containment bucket shall be compatible with any and all fuel blends in common use in California, including seasonal changes, and approved for use as specified in Title 13, CCR, section 2260, et seq.

2. Each Spill Containment Bucket Drain Valve shall be 100 percent performance tested at the factory. Each Spill Containment Bucket shall have affixed to it a card or label stating the performance specifications listed below, and a statement that the valve was tested to, and met, the following specification.

    a. The leak rate for the Spill Containment Bucket Drain Valve meets or exceeds the following specification: 2.00 inches H_2O at 0.17 CFH

Rotatable Product and Vapor Recovery Adaptors

1. The rotatable product and vapor recovery adaptors shall not leak.

2. Rotatable product and vapor recovery adaptors shall be capable of rotating at least 360 degrees when used in conjunction with any product or vapor recovery elbow used to connect to cargo tanks.

3. The vapor recovery adaptor cam and groove shall be manufactured in accordance with the standard described in Commercial Item Description, CID A-A-59326.

4. The rotatable product adaptor cam and groove shall be manufactured in accordance with the cam and groove standard specified by CARB as shown in Figure 3P.

5. Each rotatable product and vapor recovery adaptor shall be 100 percent performance tested at the factory. Each adaptor shall have affixed to it a card or label stating the performance specification listed below, and a statement that the adaptor was tested to, and met, the following specification.

    a. The average static torque for the rotatable adaptor meets or exceeds the following specification: maximum 108 pound-inch average static torque

Product and Vapor Recovery Adaptor Dust Caps

1. Dust caps shall not leak when installed on vapor recovery or product adaptors. Dust caps shall be manufactured to ensure maximum compatibility with the cam and groove standards for rotatable adaptors shown in Figure 3A.

Figure 3A

Manufacturers Component Standards or Specifications

Component	Test Method	Standard or Specification
Drop Tube/Drain Valve Assembly	Exhibit 4	2.00 inches H_2O at 0.17 CFH
Drain Valve Assembly Only	Exhibit 4 or equivalent	2.00 inches H_2O at 0.17 CFH
Rotatable Phase I Adaptors	Exhibit 5	Minimum, 360-degree rotation Maximum, 108 pound-inch average static torque
Rotatable Vapor Recovery Adaptor	Micrometer	Cam and Groove Standard CID A-A-59326
Rotatable Product Adaptor	Micrometer	Cam and Groove Standard CARB Standard (Figure 3P)
UST, Fittings and Connections	TP-201.3	2.00 inches H_2O - 5 minutes
Pressure/Vacuum Vent Valve	TP-201.2B Appendix 1	Positive Pressure: 3.0 ±0.5 inches H_2O Negative Pressure: 8.0 ±2.0 inches H_2O Leakrate: ≤ 0.05 CFH at +2.0 inches H_2O ≤ 0.21 CFH at –4.0 inches H_2O

Figure 3A

Typical Drop Tube Placement Using Phil-Tite Spill Containment Bucket

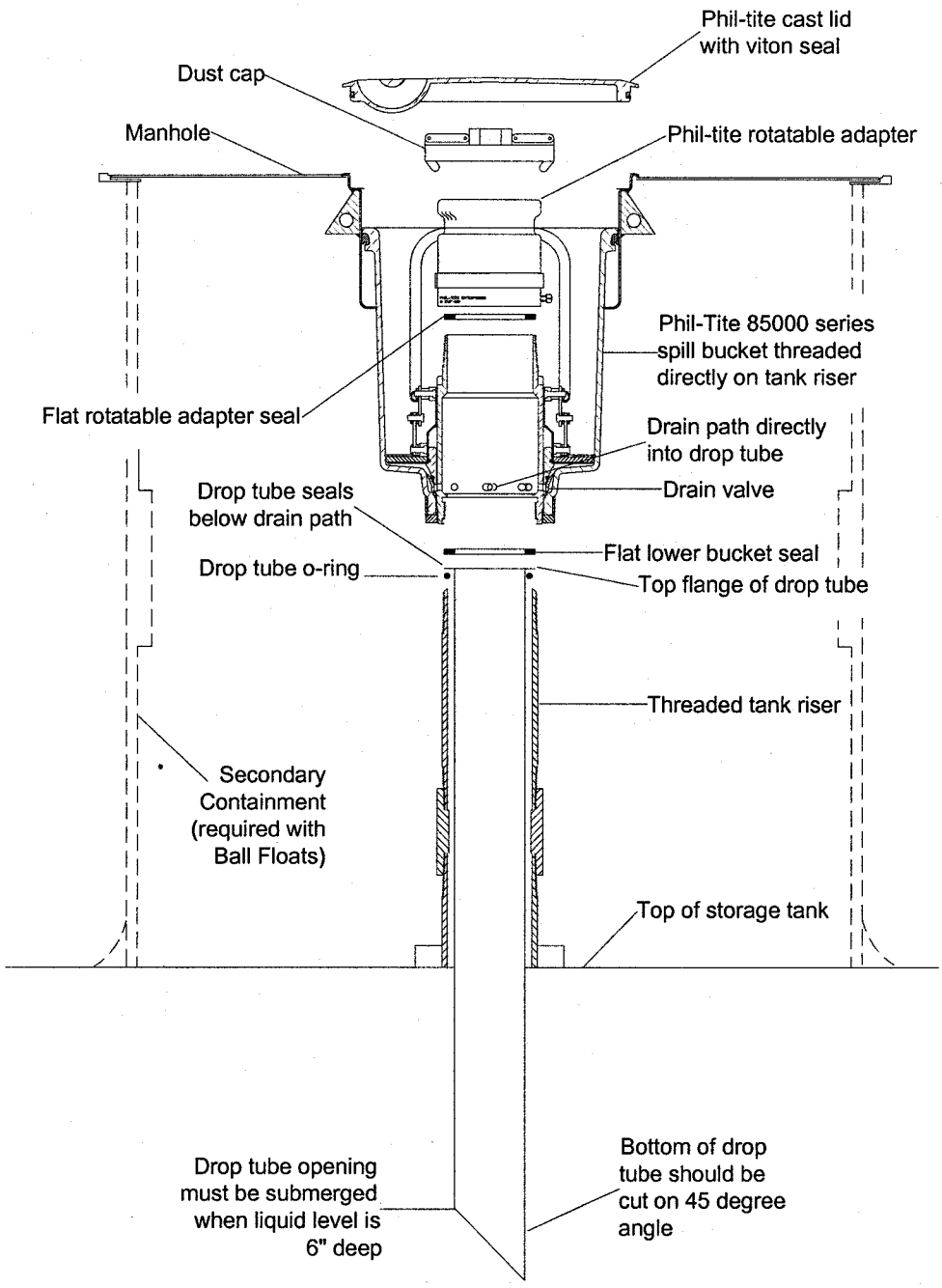

Figure 3B

Typical Vapor Installation Using Phil-Tite Spill Containment Bucket

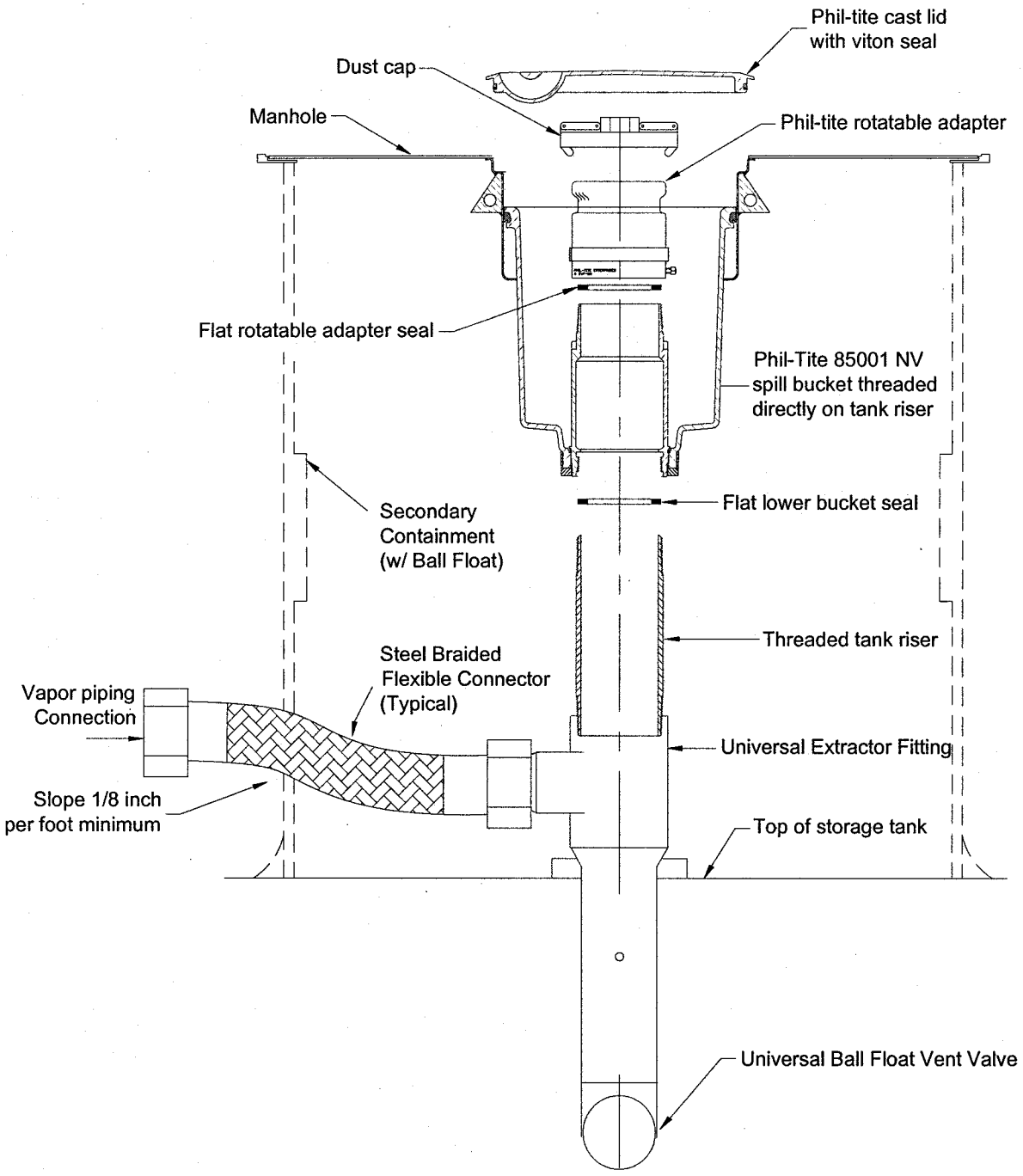

Figure 3C

Typical Vent Pipe Manifold

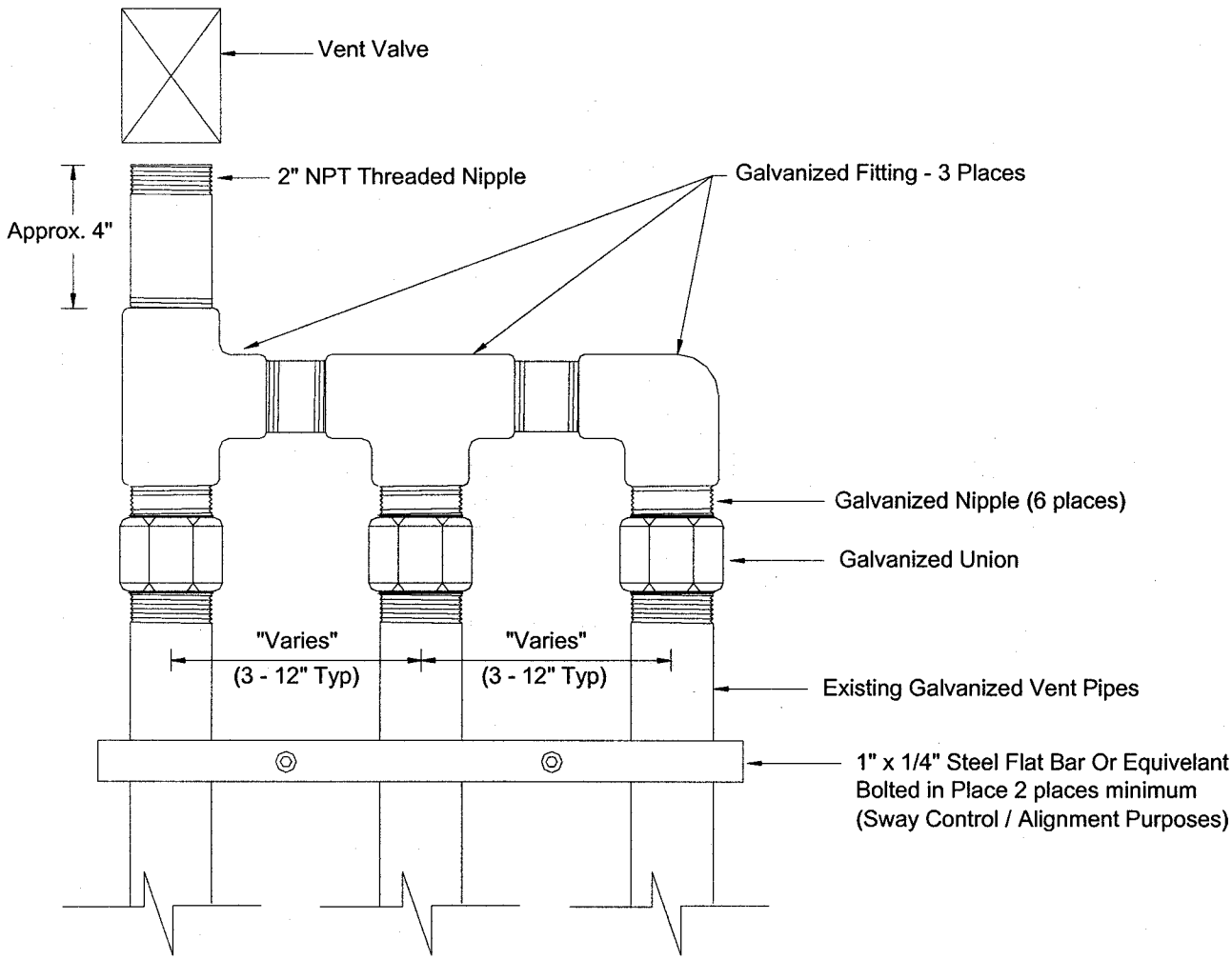

Note: This figure represents one instance where three vent pipes have been manifolded into one single outlet. However, a maximum of three Husky Model 4885 Threaded Pressure/Vacuum Vent Valves may be used on a single Gasoline Dispensing Facility.

Figure 3D

Phil-Tite Removal and Installation Kit For Rotatable Adaptors and Spill Containment Buckets

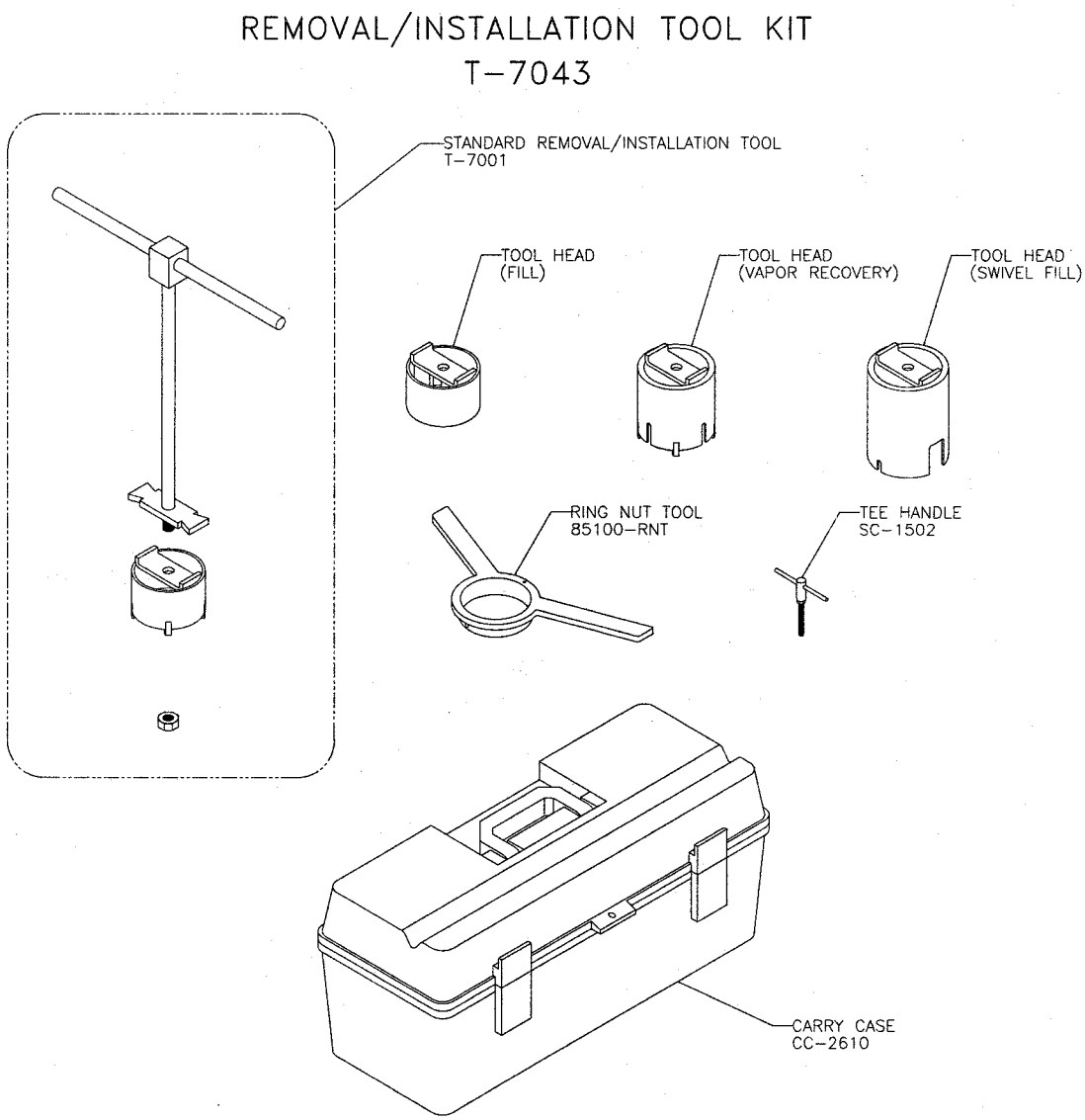

Figure 3E

Phil-Tite 85000 and 85000-MS Product Spill Container and Drain Valve Assembly

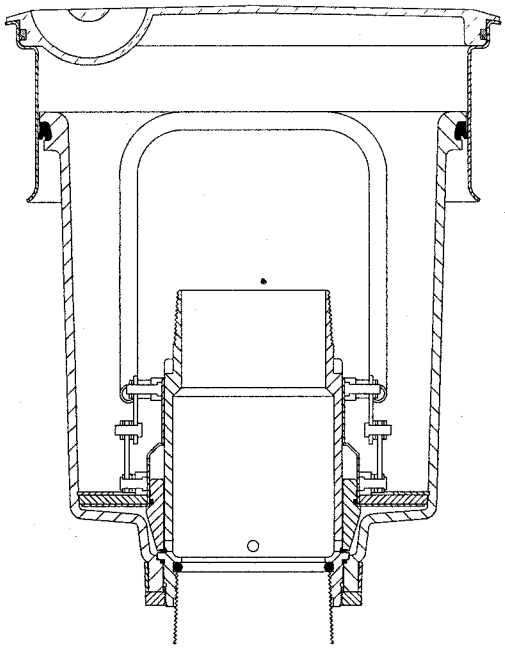

INSTALLATION INSTRUCTIONS:
Cut and fit tank riser to terminate approximately 20" below finish grade. Use coupler and factory nipple to finish riser height to terminate 13-3/4" below finish grade. Next, measure and cut drop tube on a bias (minimum 2" from tank bottom - maximum 6" from bottom) and install tank bottom protector if needed. Install drop tube with proper seals. Install Product bucket and torque to approximately 50 ft. lbs. **(using Phil-Tite Enterprises' tool kit - part #T-7043).**

Next install swivel adaptor **using Phil-Tite Enterprises' tool kit - part #T-7043 (available in our catalog)** and torque to approximately 30 ft. lbs. Tighten setscrews to secure swivel.

The use of any unapproved tools, or over tightening bucket or swivel, will void any and all applied warranties.

MAINTENANCE INSTRUCTIONS:
Semi-Annually: Clean entire bucket and remove Drain Valve Assembly. Inspect all seals and replace components as needed. Upon completion, make sure bucket, valve, handle, and filter are properly aligned and adjusted.

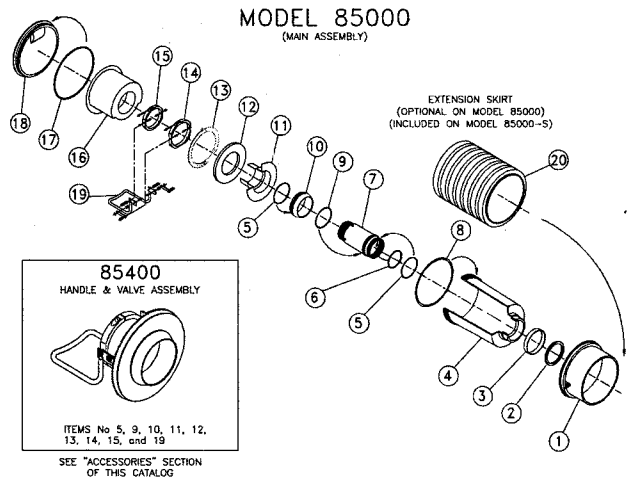

ITEM	PART No	DESCRIPTION	REQ'D
1	85010	SLEEVE	1
2	85019	FLANGE NUT	1
3	85018	COMPRESSION RING	1
4	85065	BUCKET	1
5	85035	RISER TUBE O-RING (OUTER) & SHUT OFF COLLAR O-RING (UPPER)	2
6	85039	RISER TUBE O-RING (INNER)	1
7	85020	RISER TUBE	1
8	85036-N	BUCKET O-RING	1
9	85038-1	SHUT OFF COLLAR O-RING (LOWER)	1
10	85021	SHUT OFF COLLAR	1
11	85032	BELLOW & SCREEN	1
12	UF8005	FOAM FILTER	1
13	85031	BELLOW & SCREEN RETAINING RING	1
14	85050	CLAMP (LOWER)	1
15	85040	CLAMP (UPPER)	1
16	PP-1005-TB	BUCKET INSERT	1
17	SC-1513V-N	LID O-RING	1
18	85011	CAST LID	1
19	85023	BAIL HANDLE	1
20	85029	EXTENSION SKIRT (OPTIONAL)	1

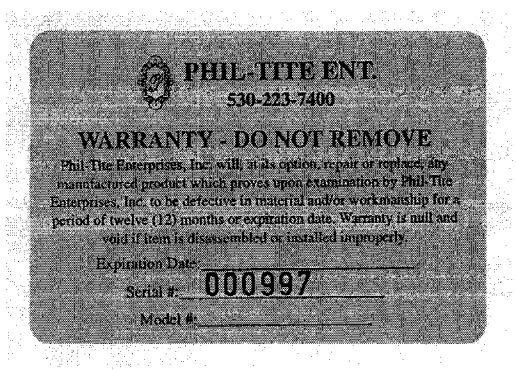

Component Warranty Tag. Placed on outside of spill container, near top, just below upper lip.

Figure 3F

Phil-Tite 85001-NV Vapor Recovery Spill Container and Inner Assembly

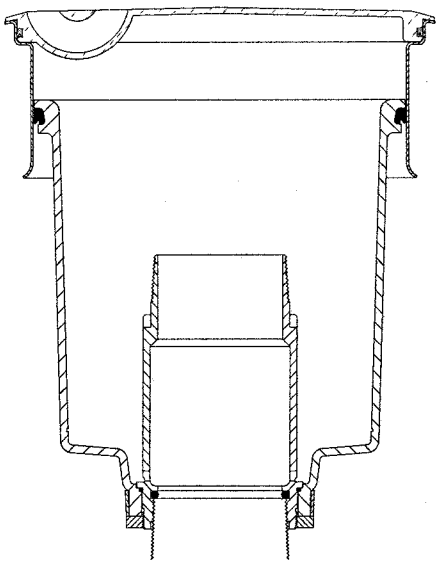

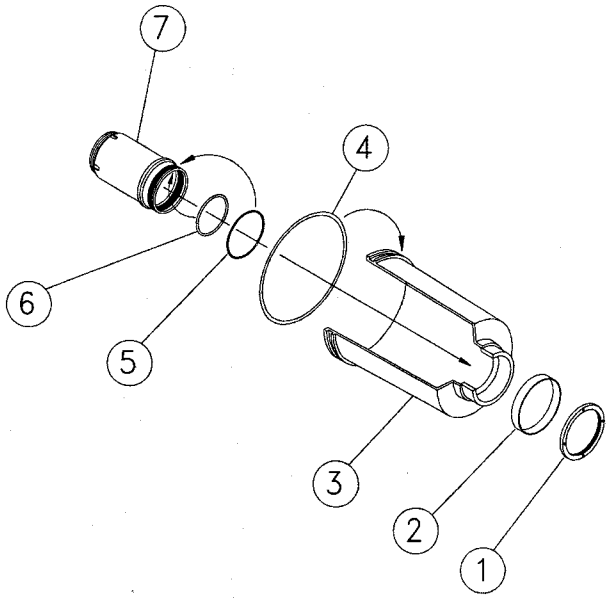

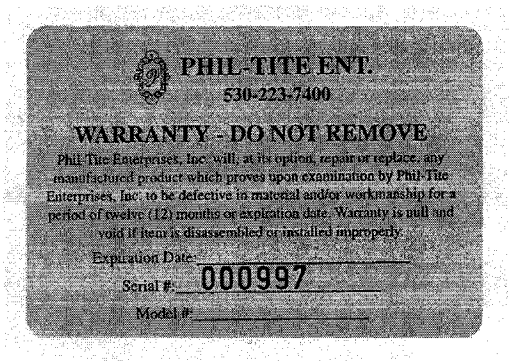

Component Warranty Tag. Placed on outside of spill container, near top, just below upper lip.

INSTALLATION INSTRUCTIONS:
Cut and fit tank riser to terminate approximately 20" below finish grade. Use coupler and factory nipple to finish riser height to terminate 13-3/4" below finish grade. Next, measure and cut drop tube on a bias (minimum 2" from tank bottom - maximum 6" from bottom) and install tank bottom protector if needed. Install drop tube with proper seals. Install Product bucket and torque to approximately 50 ft. lbs. **(using Phil-Tite Enterprises' tool kit - part #T-7043).**

Next install swivel adaptor **using Phil-Tite Enterprises' tool kit - part #T-7043 (available in our catalog)** and torque to approximately 30 ft. lbs. Tighten setscrews to secure swivel.

The use of any unapproved tools, or over tightening bucket or swivel, will void any and all applied warranties.

MAINTENANCE INSTRUCTIONS:
Routinely clean and inspect bucket quarterly.

ITEM	PART No	DESCRIPTION	REQ'D
1	85019	FLANGE NUT	1
2	85018	COMPRESSION RING	1
3	85065	INNER COLLECTOR BUCKET	1
4	85036-N	BUCKET O-RING	1
5	85035	RISER TUBE O-RING (OUTER)	1
6	85039	RISER TUBE FLAT SEAL (INNER)	1
7	85020-V	RISER TUBE (VAPOR REC)	1

Figure 3G

Phil-Tite 14" Cast Iron Lid With Viton Seal

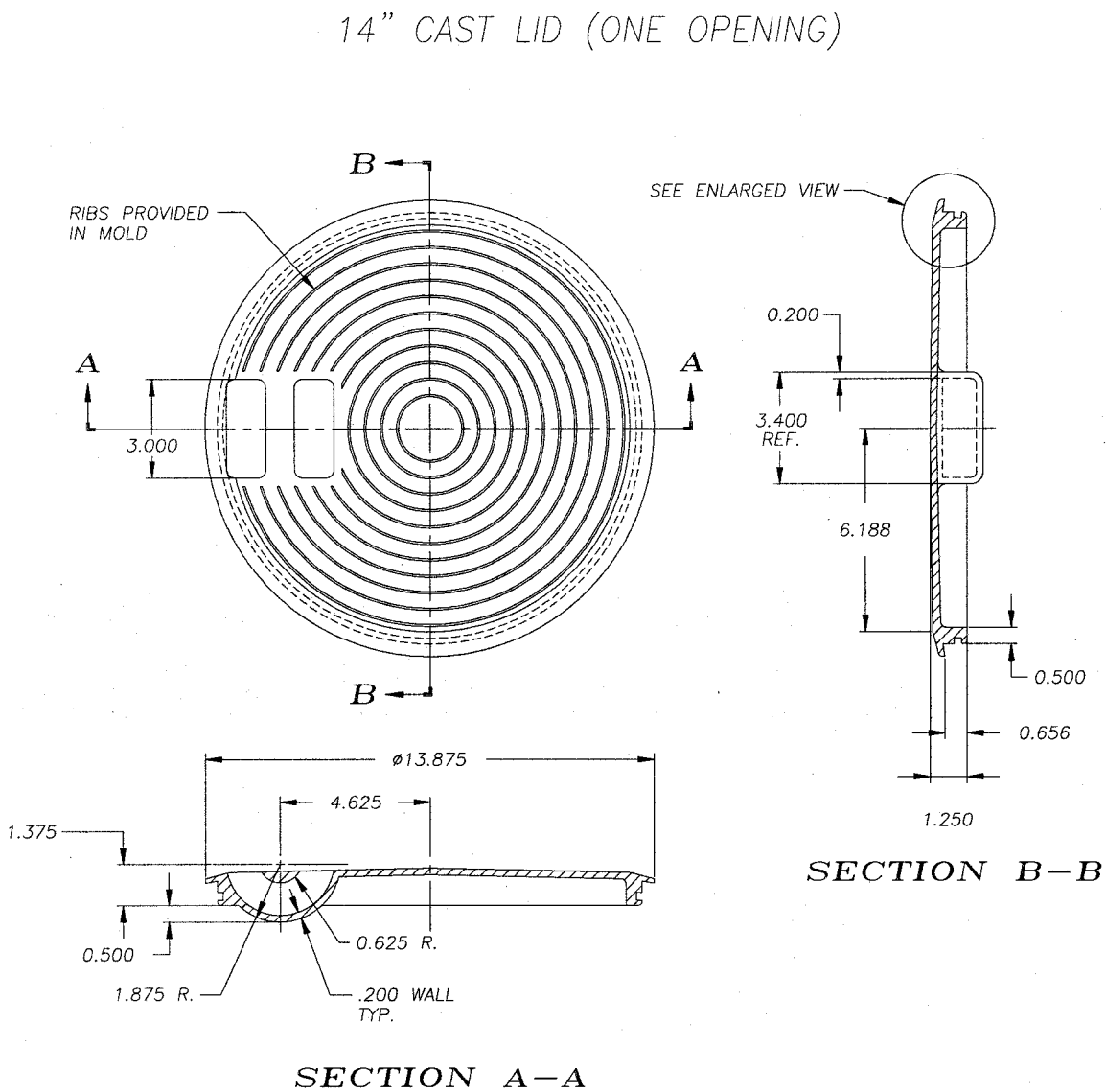

Figure 3H

Phil-Tite Debris Bucket
Part Number PP 1005 TB (Product)
Part Number PP 1005 TBP (Vapor)

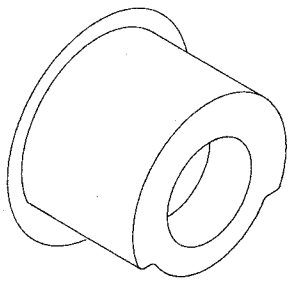

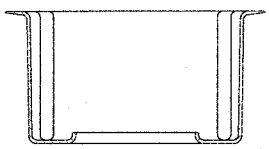

Debris Bucket

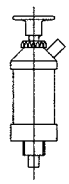

Hand Pump
(installd in vapor
debris bucket only)

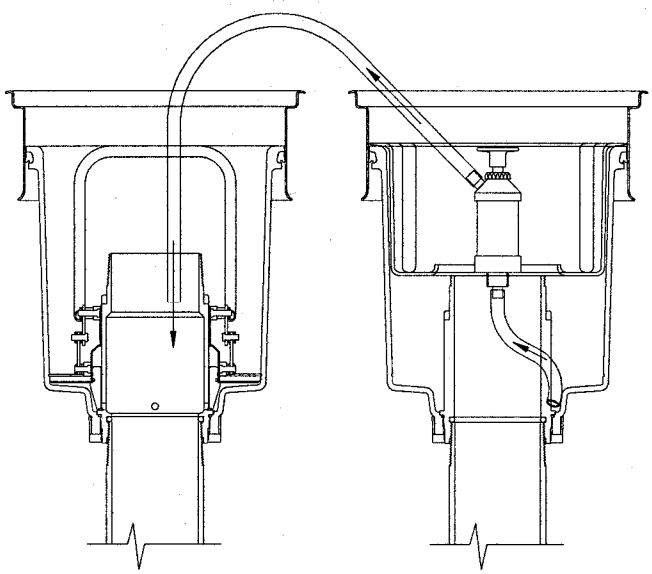

Hand Pump Operation

Figure 3I

Phil-Tite SWF-100-B Product Swivel Adaptor

INSTALLATION INSTRUCTIONS:
Cut and fit tank riser to terminate approximately 20" below finish grade. Use coupler and factory nipple to finish riser height to terminate 13-3/4" below finish grade. Next, measure and cut drop tube on a bias (minimum 2" from tank bottom - maximum 6" from bottom) and install tank bottom protector if needed. Install drop tube with proper seals. Install Product bucket and torque to approximately 50 ft. lbs. **(using Phil-Tite Enterprises' tool kit - part #T-7043).**

Next install swivel adaptor **using Phil-Tite Enterprises' tool kit - part #T-7043 (available in our catalog)** and torque to approximately 30 ft. lbs. Tighten setscrews to secure swivel.

The use of any unapproved tools, or over tightening bucket or swivel, will void any and all applied warranties.

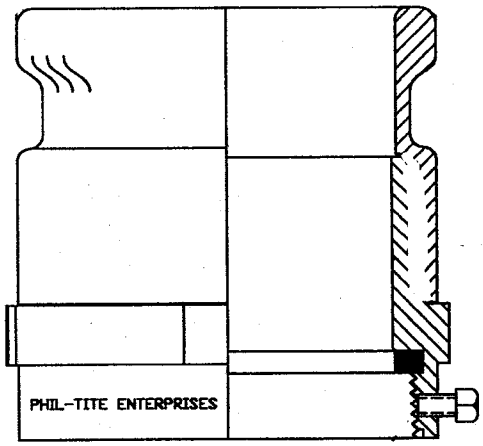

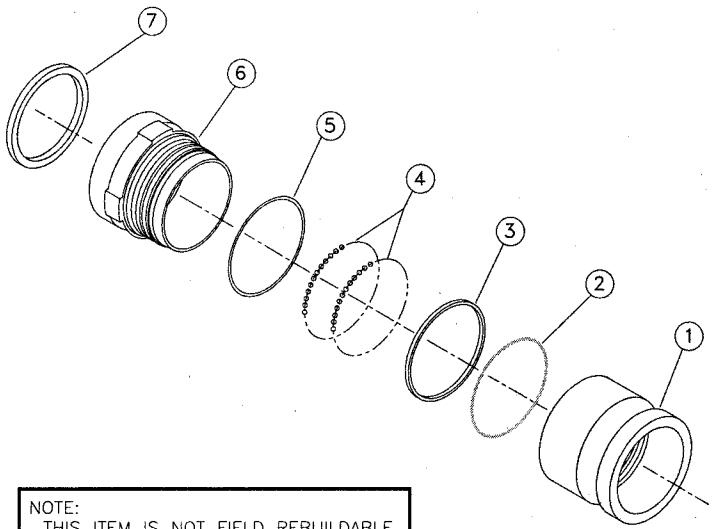

NOTE:
THIS ITEM IS NOT FIELD REBUILDABLE

ITEM	DESCRIPTION	REQ'D
1	SWIVEL TOP (FILL)	1
2	TEFLON TENSION RING	1
3	URETHANE WIPER SEAL	1
4	BALL BEARINGS (72 EACH RACE)	2
5	VITON O-RING	1
6	SWIVEL BASE (FILL)	1
7	BUNA GASKET	1

Phil-Tite Enterprises, Inc.
3732 Electro Way
Redding, CA 96002
Phone - 530-223-7400
Fax - 530-223-7418

WARRANTY CARD

This product is warranted by Phil-Tite Enterprises, Inc. against defective material and workmanship for 1 (one) year from installation date. We will repair/replace, as we deem necessary, product that has been verified defective by a representative of our company. Any damage caused by either freight or wrongful installation are not covered under this warranty. This warranty does not cover normal wear, or force majeure - caused by fire, flood, earthquake, explosion, war, or acts of God. Seals and O-rings are not a warranty item. Warranty is null and void if a) item is disassembled, b) item is installed improperly, or c) warranty label has been tampered with or is removed from product.

Expiration Date:

Serial Number:

Model Number: Mfg. Number:

This card must be returned to manufacturer for warranty to be honored

Figure 3J

Phil-Tite SWV-101B Vapor Recovery Swivel Adaptor

INSTALLATION INSTRUCTIONS:
Cut and fit tank riser to terminate approximately 20" below finish grade. Use coupler and factory nipple to finish riser height to terminate 13-3/4" below finish grade. Next, measure and cut drop tube on a bias (minimum 2" from tank bottom - maximum 6" from bottom) and install tank bottom protector if needed. Install drop tube with proper seals. Install Product bucket and torque to approximately 50 ft. lbs. **(using Phil-Tite Enterprises' tool kit - part #T-7043).**

Next install swivel adaptor **using Phil-Tite Enterprises' tool kit - part #T-7043 (available in our catalog)** and torque to approximately 30 ft. lbs. Tighten setscrews to secure swivel.

The use of any unapproved tools, or over tightening bucket or swivel, will void any and all applied warranties.

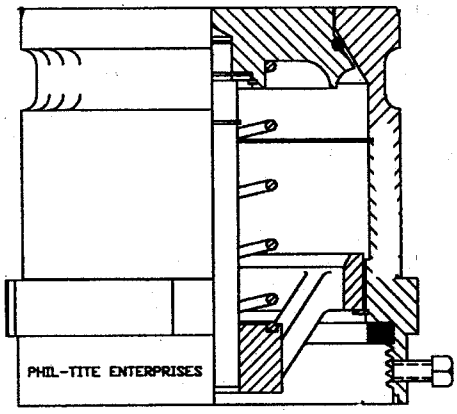

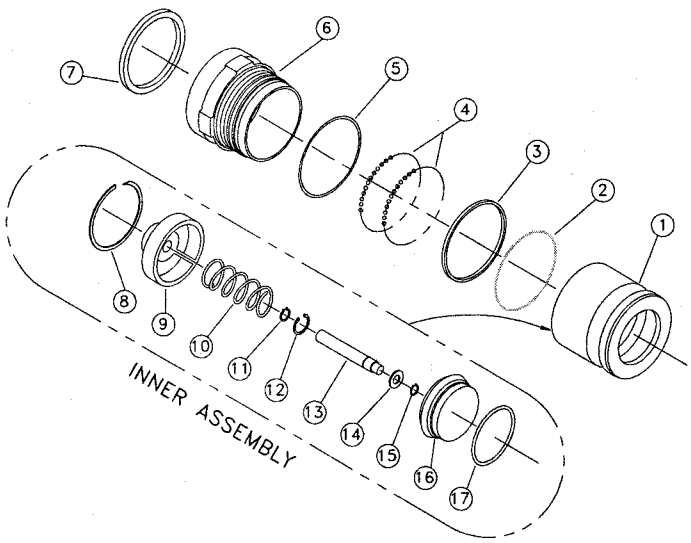

ITEM	DESCRIPTION	REQ'D
1	SWIVEL TOP (VAPOR REC.)	1
2	TEFLON TENSION RING	1
3	URETHANE WIPER SEAL	1
4	BALL BEARINGS (72 EACH RACE)	2
5	VITON O-RING	1
6	SWIVEL BASE (VAPOR REC.)	1
7	BUNA GASKET	1
8	SNAP RING (INT.)	1
9	SPIDER	1
10	SPRING	1
11	SAFETY SNAP RING (EXT.)	1
12	SNAP RING (INT.)	1
13	SHAFT	1
14	FLATWASHER	1
15	SNAP RING (EXT.)	1
16	POPPIT	1
17	VITON O-RING	1

NOTE:
THIS ITEM IS NOT FIELD REBUILDABLE

Phil-Tite Enterprises, Inc.
3732 Electro Way
Redding, CA 96002
Phone - 530-223-7400
Fax - 530-223-7418

WARRANTY CARD

This product is warranted by Phil-Tite Enterprises, Inc. against defective material and workmanship for 1 (one) year from installation date. We will repair/replace, as we deem necessary, product that has been verified defective by a representative of our company. Any damage caused by either freight or wrongful installation are not covered under this warranty. This warranty does not cover normal wear, or force majeure - caused by fire, flood, earthquake, explosion, war, or acts of God. Seals and O-rings are not a warranty item. Warranty is null and void if a) item is disassembled, b) item is installed improperly, or c) warranty label has been tampered with or is removed from product.

Expiration Date:

Serial Number:

Model Number: Mfg. Number:

This card must be returned to manufacturer for warranty to be honored

Figure 3K

Morrison Brothers 323C Vapor Recovery Adaptor Cap

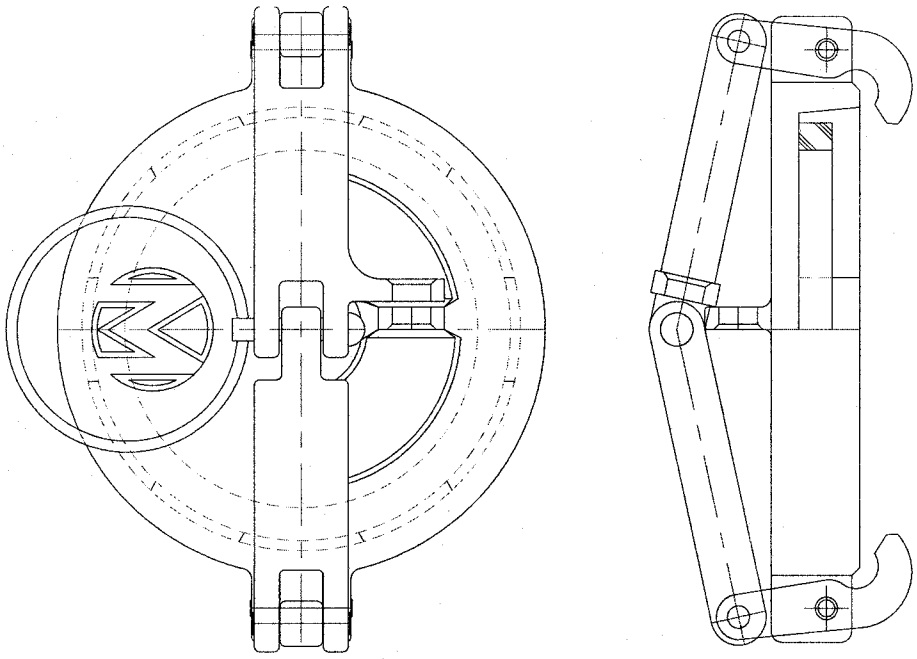

WARRANTY—All Morrison products are thoroughly tested before shipment and only material found to be defective in manufacture will be replaced. Claims must be made within one year from the date of invoice. Morrison Bros. Co. will not allow claims for labor or consequential damage resulting from purchase, installation, or misapplication of the product.

MORRISON BROS. CO.
24th and Elm Street
P.O. Box 238
Dubuque, IA 52001

Figure 3L

Morrison Brothers 305C Product Adaptor Cap

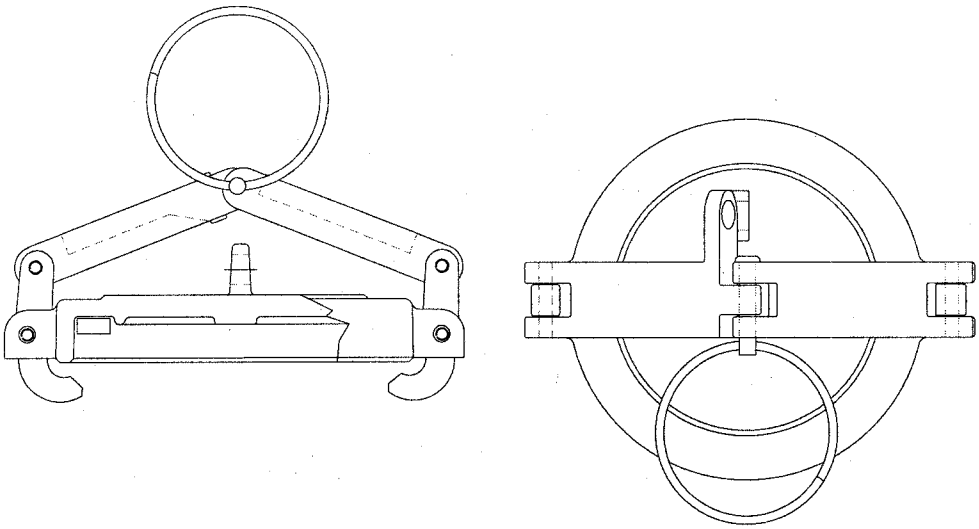

WARRANTY—All Morrison products are thoroughly tested before shipment and only material found to be defective in manufacture will be replaced. Claims must be made within one year from the date of invoice. Morrison Bros. Co. will not allow claims for labor or consequential damage resulting from purchase, installation, or misapplication of the product.

MORRISON BROS. CO.
24th and Elm Street
P.O. Box 238
Dubuque, IA 52001

Figure 3M

Husky Model 4885 2-Inch Threaded Pressure/Vacuum Vent Valve

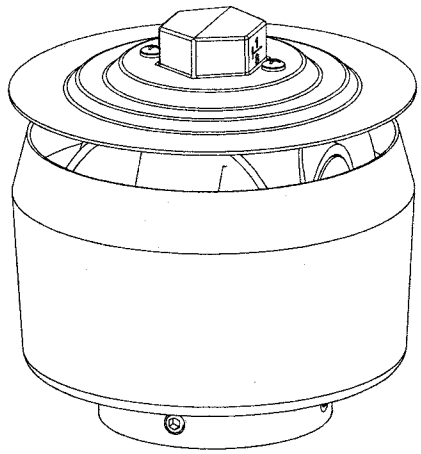

Newer model 4885 has top hex used for installation. Earlier model 4885, without top hex is permissible.

PRESSURE/VACUUM VENT MODEL 4885
INSTALLATION AND MAINTENANCE INSTRUCTIONS

INSTALLATION

The P/V Vent is designed to fit on top of a 2" vent pipe. Remove the P/V Vent from the carton and visually inspect for any shipping damage.

MAINTENANCE

Annually inspect the P/V Vent valve for foreign objects without removing the P/V Vent valve from the vent pipe by using the following procedure:

1. Remove the screws that holds the top cover on.
2. Remove any debris that might be sitting inside the lower cover.
3. Check the drain holes in the lower cover for blockage.
4. The two (2) screens should not be removed.
5. Reinstall the top cover and retaining screws.
6. Tighten the screws firmly.

NOTE: DO NOT ALTER OR COVER THE P/V VENT

HUSKY CORPORATION • 2325 HUSKY WAY • PACIFIC, MO 63069
www.husky.com PHONE: 800-325-3558

009841-3 06/11/01

Warranty

Husky Corporation will, at its option, repair, replace, or credit the purchase price of any Husky manufactured product which proves upon examination by Husky, to be defective in material and/or workmanship within FIFTEEN (15) MONTHS from the date of shipment by Husky if the original purchaser properly returns a warranty registration card, otherwise, within FIFTEEN (15) MONTHS from the date of shipment for any Husky Inverted Swivel, within EIGHTEEN (18) MONTHS from the date of shipment for any Husky Pressure Vacuum Vent or Model 4860 Hi-Flo Swivel and within ONE (1) YEAR from the date of shipment by Husky for any other Husky manufactured product, except as otherwise provided herein.

The warranty period on repaired or replacement vapor recovery nozzles is only for the remainder of the warranty period of the defective nozzle. Buyer must return the products to Husky, transportation charges prepaid. This Warranty excludes the replaceable bellows, bellows spring assembly, spout assembly and scuff guard, unless (i) damage is obvious when the product is removed from shipping carton and (ii) the defective product is returned to Husky prior to use. This Warranty does not apply to equipment or parts which have been installed improperly, damaged by misuse, improper operation or maintenance, or which are altered or repaired in any way other than by Husky.

The Warranty provisions contained herein apply ONLY to original purchasers who use the equipment for commercial or industrial purposes. There are no other warranties of MERCHANTABILITY, FITNESS FOR A PARTICULAR PURPOSE, OR OTHERWISE, and any other such warranties are hereby specifically disclaimed.

Husky assumes NO LIABILITY for labor charges or other costs incurred by Buyer incidental to the service, adjustment, repair, return, removal or replacement of products. HUSKY ASSUMES NO LIABILITY FOR ANY INCIDENTAL, CONSEQUENTIAL, OR OTHER DAMAGES UNDER ANY WARRANTY, EXPRESS OR IMPLIED, AND ALL SUCH LIABILTY IS HEREBY EXPRESSLY EXCLUDED.

Husky reserves the right to change or improve the design of any Husky fuel dispensing equipment without assuming any obligations to modify any fuel dispensing equipment previously manufactured.

Figure 3N

Universal Ball Float Vent Valve Model Number 37

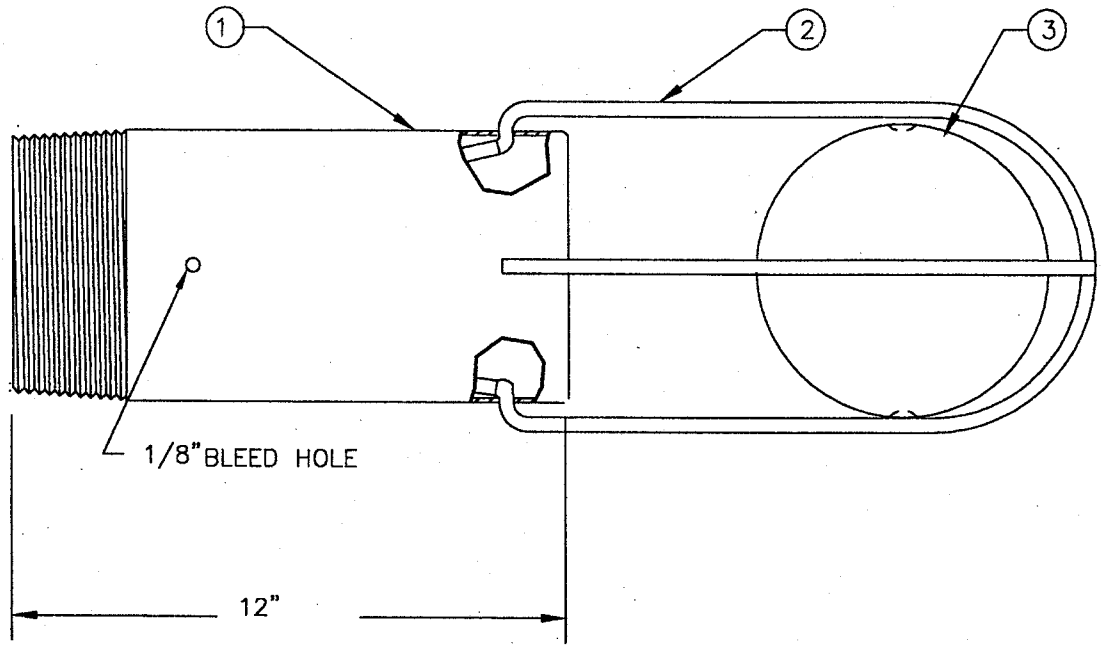

WARRANTY

All ***UNIVERSAL*** products are guaranteed to be free from defects in materials and workmanship. All products are thoroughly tested before shipment and guaranteed to the extent of replacing only products found to be defective in manufacture. We cannot, however, allow claims for labor or consequential damage resulting from purchase, installation or misapplication of our products.

Our responsibility ceases when products are accepted by transportation carriers. All goods are at the risk of the purchaser after they have been delivered by us to the carrier and receipt obtained from same (in good order).

The right is reserved to make changes in pattern, design or materials when deemed necessary, without prior notice. Products which have become obsolete by reason of design change or discontinued as a manufactured item may not be returned for credit.

THIS WARRANTY IS IN LIEU OF ALL OTHER WARRANTIES, EXPRESS OR IMPLIED, AND SPECIFICALLY THE WARRANTIES OF MERCHANTABILITY AND FITNESS FOR A PARTICULAR PURPOSE.

UNIVERSAL products should be used in compliance with applicable federal, state and local laws and regulations. Product choice should be based on physical specifications and limitations and compatibility with the environment and material to be handled. ***UNIVERSAL MAKES NO WARRANTY OF FITNESS FOR A PARTICULAR USE.***

Figure 3O

OPW Model 53 VML-0120 Ball Float Vent Valve

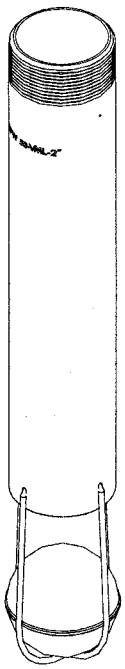

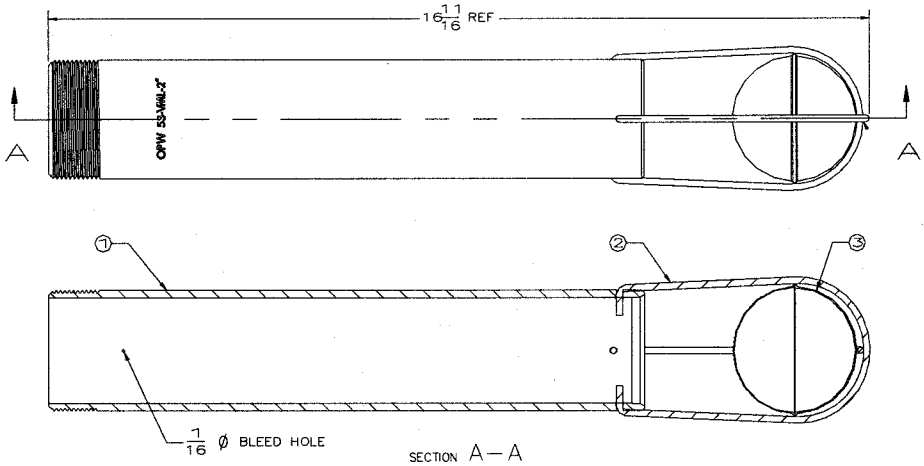

OPW Product Warranty

OPW warrants that products sold by it are free from defects in materials and workmanship for a period of one year from the date of shipment by OPW. As the exclusive remedy under this limited warranty, OPW will at its sole discretion, repair, replace, or issue credit for future orders for any product that may prove defective within the one year period. This warranty shall not apply to any product that has been altered in any way, which has been repaired by any party other than a service representative authorized by OPW, or when failure is due to misuse, conditions of use, or improper installation or maintenance. OPW shall in no instance have any liability whatsoever for special, incidental or consequential damages to any party and shall have no liability for the cost of labor, freight, excavation, clean up, downtime, removal, reinstallation, loss of profit, or any other cost or charges in excess of the amount of the original invoice for the products.

THIS WARRANTY IS IN LIEU OF ALL OTHER WARRANTIES, EXPRESS OR IMPLIED, AND SPECIFICALLY THE WARRANTIES OF MERCHANTABILITY AND FITNESS FOR A PARTICULAR PURPOSE. THERE ARE NO WARRANTIES WHICH EXTEND BEYOND THE DESCRIPTION ON THE FACE HEREOF.

OPW

Copyright, 2000- OPW Fueling Components Inc., Cincinnati, OH

IN ACCORDANCE WITH CARB CP201 SECTION 9.2.3:

WARRANTY TAGS SHALL BE REMOVED ONLY BY THE OWNER/OPERATOR OF THE VAPOR RECOVERY EQUIPMENT

- OPW guarantees that all products are free from defects in materials and workmanship for a period of one (1) year from date of manufacture
- The manufacture date is stamped on the product. A month and year denote the start date for warranty. Example: 02 00, warranty is for one year from February 2000
- All OPW products are inspected and tested at the OPW manufacturing facility before shipping.
- This product is tested and certified to meet the appropriate performance standard found in CARB procedure CP201 and all applicable CARB test procedures.

For all other questions or inquiries please contact your local OPW distributor. Distributors are located on the OPW web site at: ***www.opw-fc.com***

Copyright, 2000- OPW Fueling Components Inc., Cincinnati, OH

Figure 3P

CARB Product Adaptor Cam and Groove Standard

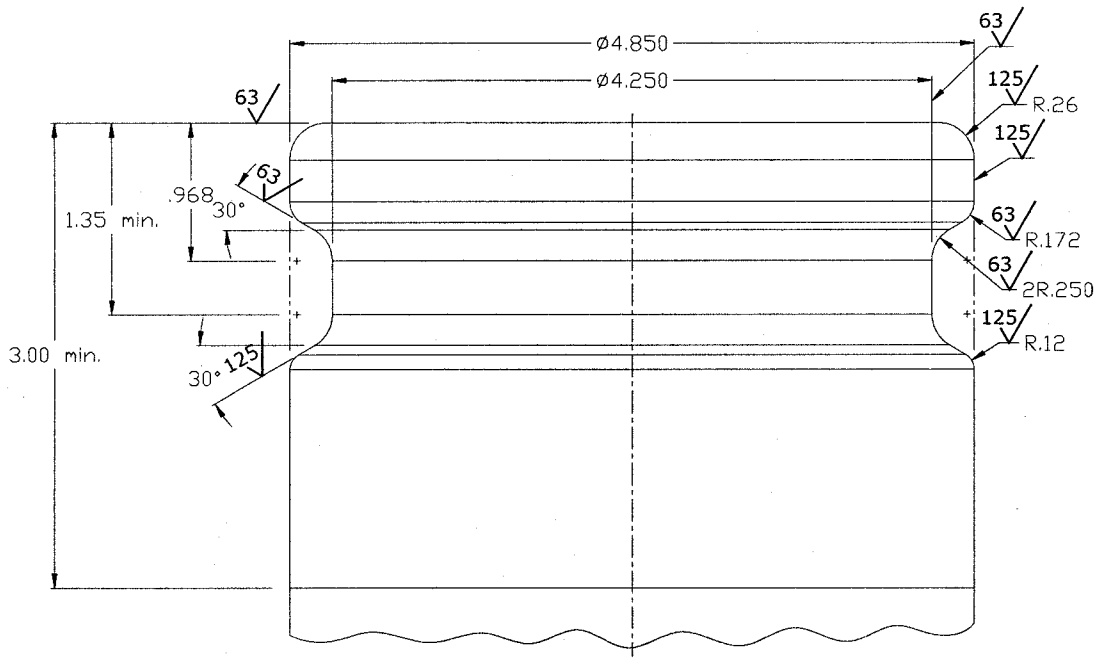

UNLESS OTHERWISE SPECIFIED
DIMENSIONS ARE IN INCHES
TOLERANCES ON DECIMALS
.XXX ± .005
.XX ± .01
ANGLES ± 0.5°

Executive Order VR-101-A

Exhibit 4

Pressure Integrity Of Drop Tube/Drain Valve Assembly

Definitions common to all certification and test procedures are in:

D-200 Definitions for Vapor Recovery Procedures

For the purpose of this procedure, the term "CARB" refers to the California Air Resources Board, and the term "Executive Officer" refers to the CARB Executive Officer, or his or her authorized representative or designate.

1. PURPOSE AND APPLICABILITY

1.1 The purpose of this procedure is to quantify the pressure integrity of a Drop Tube and Drain Valve seal when a drop tube is installed below a Spill Containment Bucket drain path as shown in Figure 1. This procedure determines compliance with the performance standard(s) for the maximum allowable leakrate for the Spill Containment Bucket Drain Valve as defined in CP-201 and verifies the zero leak decay limit for a drop tube seal (Drop Tube/Drain Valve Assembly).

1.2 This procedure is not applicable to installations that have drop tube overfill protection devices installed.

2. PRINCIPLE AND SUMMARY OF TEST PROCEDURE

2.1 A compatible product cap is modified to allow the introduction of nitrogen into a Phase I drop tube. A pressure-measuring device is connected to the modified cap. If the resulting measured nitrogen flowrate necessary to maintain a steady-state pressure of 2.00 inches H_2O is less than, or equal to, the maximum allowable leakrate for the Spill Containment Drain Valve, the assembly is verified to be in compliance.

2.2 If the introduction of nitrogen, at a flowrate equal to the maximum allowable leakrate does not result in a steady state pressure that meets, or exceeds, the limits specified in CP-201, the Phase I product adaptor shall be inspected and tested. Any leaks attributable to the Phase I product adaptor shall be corrected and the test repeated to ensure the measured pressure versus flowrate is attributable only to the Drop Tube/Drain Valve Assembly.

2.3 If the introduction of nitrogen, at a flowrate equal to the maximum allowable leakrate does not result in a steady state pressure that meets, or exceeds, the limits specified in CP-201 following verification of the Phase I adaptor integrity, the drop tube sealing mechanism shall be inspected and verified for proper seating. Any leaks attributable to the drop tube sealing mechanism shall be corrected and the test repeated to ensure the measured pressure versus flowrate is attributable only to the Spill Containment Bucket Drain Valve.

3. BIASES AND INTERFERENCES

3.1 Missing or defective gaskets on the Phase I product adaptor, or a loose adaptor, may bias the results towards noncompliance. This bias is eliminated by testing the Phase I product adaptor for leaks prior to final determination of the compliance status of the Drop Tube/Drain Valve Assembly.

3.2 Product levels less than four (4) inches above the highest opening at the bottom of the submerged drop tube may bias the test toward noncompliance.

3.3 Leaks in the test equipment will bias the results toward noncompliance. Prior to conducting the test, this bias is eliminated by conducting a leak check of the test equipment. During the test, this bias is eliminated by using leak detection solution to verify the absence of leaks in the test equipment.

4. SENSITIVITY, RANGE, AND PRECISION

4.1 The measurable leakrate is dependent upon the range of the flowmeter used for the test. The recommended flowmeter range specified in Section 5.1 provides sufficient precision at the maximum allowable leakrate defined in CP-201.

4.2 The sensitivity of the pressure measuring device is 0.01 inches H_2O for electronic pressure measuring devices and 0.05 inches H_2O for mechanical pressure gauges.

5. EQUIPMENT

5.1 Pressure Introduction Assembly. Use a product cap compatible with the Phase I product adaptor. The cap shall be equipped with a pressure tap and flowmeter capable of measuring flowrates equal to the maximum allowable leakrate. The maximum allowable full-scale range for the flowmeter shall be 1.00 CFH. The flowmeter shall be calibrated for use with nitrogen. As a safety precaution, the hose used to feed nitrogen into the assembly shall be steel braided, or a separate grounding strap may be used. An example of a complete Pressure Introduction Assembly is shown in Figure 2. An example of a Product Cap Test Assembly is shown in Figure 3.

5.2 Pressure Measuring Device. Use a pressure-measuring device to monitor the pressure in the drop tube.

5.2.1 If an electronic pressure-measuring device is used, the maximum fullscale range of the device shall be 10 inches H_2O. The minimum accuracy shall be 0.5 percent and the pressure measuring device shall be readable to the nearest 0.01 inches H_2O.

5.2.2 If a mechanical pressure-measuring device is used, the maximum fullscale range shall be 5 inches H_2O. The minimum accuracy shall be 1.0 percent and the minimum graduations shall be 0.05 inches H_2O. The minimum diameter of the pressure gauge face shall be 4 inches.

Figure 1

Drop Tube/Drain Valve Assembly

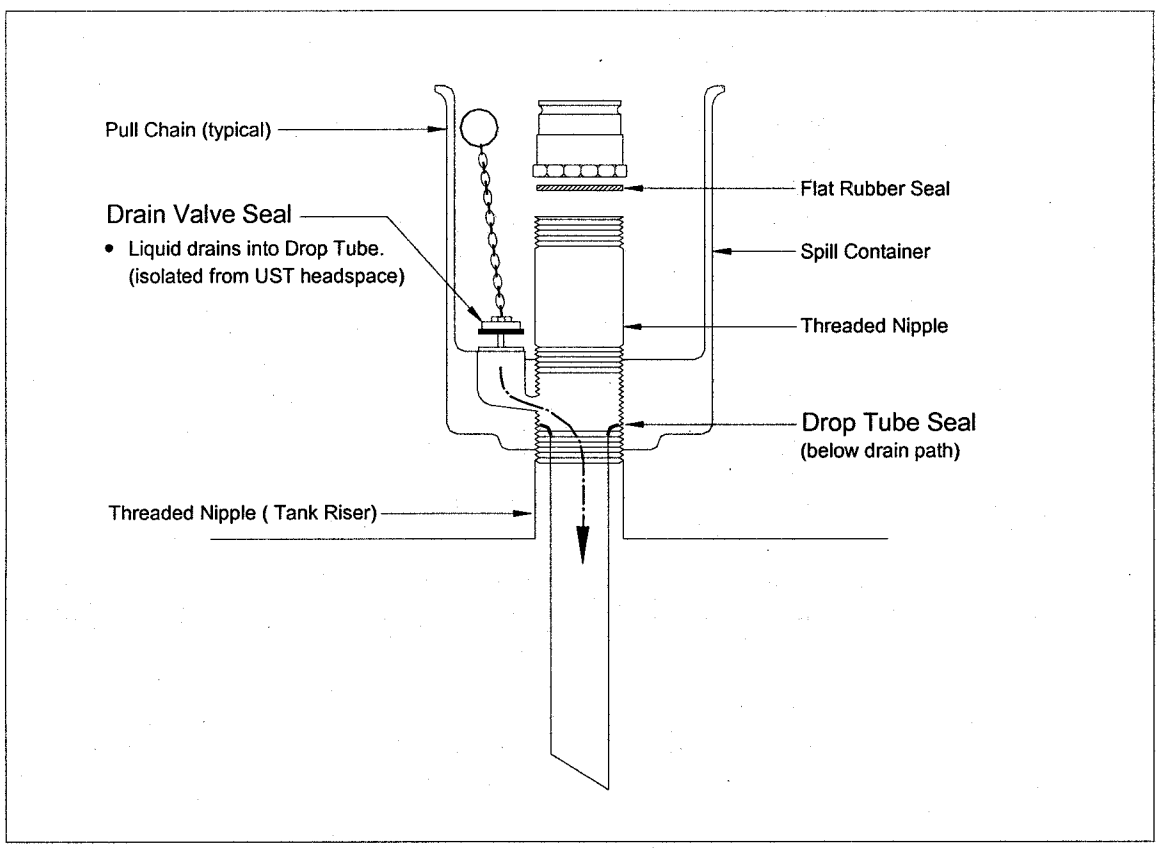

5.3 Nitrogen. Use commercial grade gaseous nitrogen in a high-pressure cylinder, equipped with a two-stage pressure regulator and a one psig pressure relief valve.

5.4 Stopwatch. Use a stopwatch accurate to within 0.2 seconds to time the duration of the test.

5.5 Leak Detection Solution. Any commercial liquid solution designed to detect vapor leaks may be used to verify the pressure integrity of the Phase I product adaptor during this test.

5.6 Vapor Poppet Pressure Relief Assembly. Use an assembly to open the Phase I vapor poppet during testing. This will ensure that the underground storage tank (UST) ullage and liquid surface is at zero gauge pressure. An example of a Vapor Poppet Pressure Relief Assembly is shown in Figure 3.

5.7 Traffic Cones. Use traffic cones to encircle the area containing the Phase I spill containment buckets while the test is being conducted.

5.8 Tank Gauging Stick. Use a tank gauging stick of sufficient length to verify that the UST liquid level is at least four (4) inches above the highest opening at the bottom of the submerged drop tube. The tank gauging stick shall be equipped with a non-sparking "L" bracket at the end.

Figure 2
Pressure Introduction Assembly

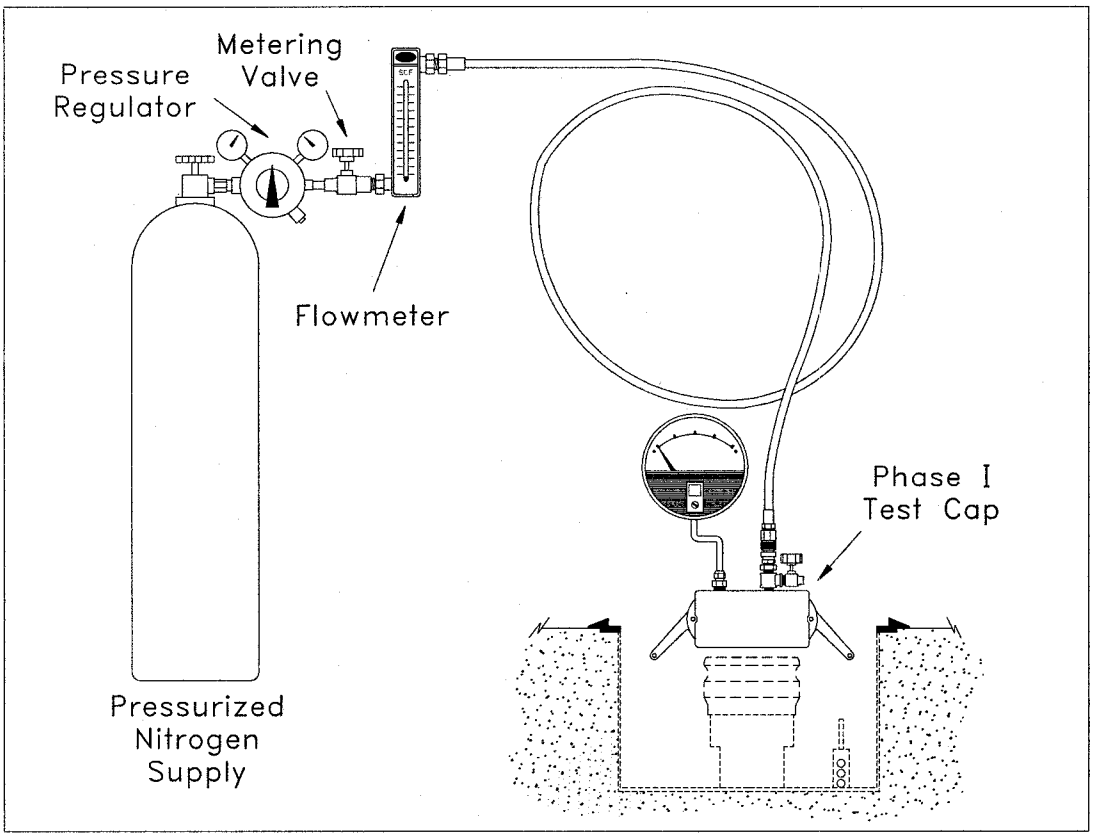

7. PRE-TEST PROCEDURES

The flowmeter and pressure-measuring device shall be calibrated within the 180 days prior to conducting the test. The flowmeter(s) shall be calibrated for use with nitrogen. Calibrations shall be conducted in accordance with EPA or CARB protocols. **CARB calibration methodology for flow meters are contained in Appendix D of Air Monitoring Quality Assurance, Volume VI, Standard Operating Procedures for Stationary Source Emission Monitoring and Testing, January 1979.**

6.2 Place the traffic cones around the perimeter of the Phase I Spill Containment Buckets, allowing sufficient space to safely conduct the test.

6.3 Remove the lids of the Phase I Spill Containment Buckets. Visually determine that the drop tube is installed below the Spill Containment Bucket and that the drain path allows liquid to drain directly into the drop tube.

Figure 3
Product Cap Test Assembly

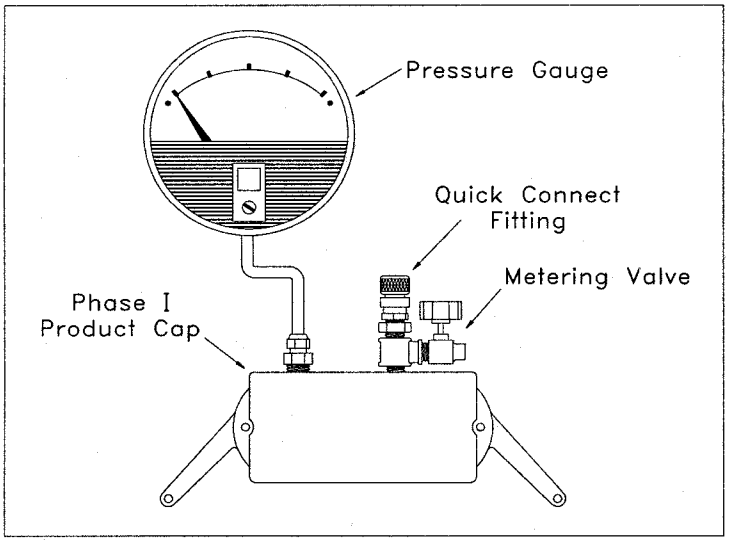

6.4 Inspect the Phase I product adaptor to ensure that the gasket is intact and that the adaptor is securely attached to the Phase I product stem.

6.5 Verify that the liquid level in the storage tank is at least four (4) inches above the highest opening at the bottom of the submerged drop tube. This may be accomplished by using a tank gauging stick equipped with a non-sparking "L" bracket on the end.

Figure 4
Vapor Poppet Pressure Relief Assembly

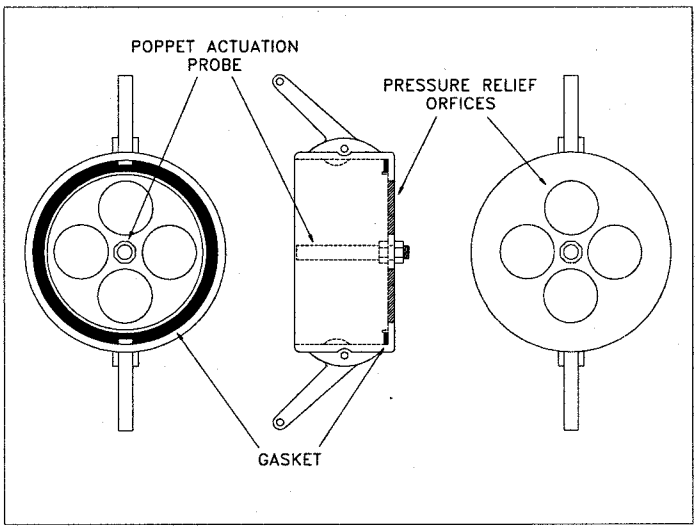

7. TEST PROCEDURE

7.1 Connect the Pressure Introduction Assembly to the Phase I product adaptor as shown in Figure 1. Connect the nitrogen supply line to the inlet of the flowmeter.

7.2 Connect the Vapor Poppet Pressure Relief Assembly to the Phase I vapor poppet to bring the UST headspace to atmospheric pressure.

7.3 With no vehicle refueling occurring, open the nitrogen supply and adjust the nitrogen flowrate to at least three times the maximum allowable leakrate specified in CP-201, and start the stopwatch. Use leak detection solution on the Pressure Introduction Assembly and verify that the test equipment does not leak at any of the connections.

7.4 Wait until the pressure measuring device records a pressure between 2.00 and 2.20 inches H_2O.

7.4.1 If the pressure does not reach at least 2.00 inches H_2O within 90 seconds, the Drop Tube/Drain Valve Assembly does not comply with the maximum allowable leakrate.

7.4.2 If the pressure reaches at least 2.00 inches H_2O, reduce the introduction of nitrogen to the allowable leakrate specified in CP-201. Wait until the pressure reaches steady state conditions for at least ten (10) seconds and record both the nitrogen flowrate and the steady state pressure. If the steady state pressure is less than 2.00 inches H_2O, the Drop Tube/Drain Valve Assembly does not comply with the maximum allowable leakrate.

7.4.2.1.1 In the case of a Drop Tube/Drain Valve Assembly not reaching the minimum specified pressure, use a soap solution on the rotatable adaptor to ensure that the rotation mechanism or the adaptor seal is not leaking.

7.4.2.1.2 In the case of a Drop Tube/Drain Valve Assembly not reaching the minimum specified pressure following verification of the rotatable adaptor mechanism, ensure that the drop tube seal is properly tightened according to the manufacturers recommended installation instructions.

8. POST-TEST PROCEDURES

8.1 Remove the Pressure Introduction Assembly and the Vapor Poppet Pressure Relief Assembly from the Phase I connections. Replace the caps on the appropriate Phase I adaptors, and the lids on the appropriate Spill Containment Buckets.

8.2 Remove the traffic cones from the Phase I area.

8.3 If the steady-state pressure, at a nitrogen flowrate rate equal to the allowable leakrate, was not equal to or greater than 2.00 inches H_2O, Equation 9-1 may be used to determine the leakrate at 2.00 inches H_2O.

9. CALCULATING RESULTS

9.1 If the flowrate of Nitrogen was at the upper limit of the flowmeter and the measured pressure never reached 2.00 inches H_20, but was greater than 0.0 inches H_2O, the actual leakrate at a pressure of 2.00 inches H_2O shall be calculated as follows:

$$Q_{2.00} = (2.00)^{1/2}\left[\frac{Q_{actual}}{(P_{actual})^{1/2}}\right] \qquad \textbf{Equation 9 – 1}$$

Where:

$Q_{2.00}$ = The leakrate of the drop tube assembly at 2.00 inches H_2O, cubic feet per hour

Q_{actual} = The actual introduction rate of nitrogen, cubic feet per hour

P_{actual} = The actual measured steady-state pressure at Q_{actual}, inches H_2O

2.00 = Pressure, inches H_2O

10. REPORTING RESULTS

10.1 Report the results of the quantification of the leakrate through the Drop Tube/Drain Valve Assembly as shown on Form 1. Districts may require the use of alternate Drop Tube/Drain Valve Assembly data sheets provided they include the same parameters identified on Form 1.

11. ALTERNATE PROCEDURES

11.1 This procedure shall be conducted as specified. Modifications to this test procedure shall not be used to determine compliance unless prior written approval has been obtained from the CARB Executive Officer, pursuant to Section 14 of Certification Procedure CP-201.

Form 1

Field Data Sheet

Pressure Integrity Of Drop Tube/Drain Valve Assembly

Facility:	Test Date:	Tester(s):
Address:	City:	Zip Code:
Phase I System Type:	Phase II System Type:	
Date of Last Flowmeter Calibration:	Date of Last Pressure Device Calibration:	

Test Results

Product Grade	Nitrogen Flowrate (CFH)	Pressure (inches H_20)	Make/Model Spill Containment Bucket	Make/Model Rotatable Product Adaptor	Make/Model Rotatable Vapor Adaptor

Comments:

Executive Order VR-101-A

Exhibit 5

Static Torque of Rotatable Phase I Adaptors

Definitions common to all certification and test procedures are in:

D-200 Definitions for Vapor Recovery Procedures

For the purpose of this procedure, the term "CARB" refers to the California Air Resources Board, and the term "Executive Officer" refers to the CARB Executive Officer, or his or her authorized representative or designate.

1. PURPOSE AND APPLICABILITY

1.1 The purpose of this procedure is to quantify the amount of static torque required to start the rotation of a rotatable Phase I adaptor. This procedure determines compliance with the performance standard specified by CARB. This procedure may also be used to verify that a Phase I adaptor rotates at least 360 degrees.

2. PRINCIPLE AND SUMMARY OF TEST PROCEDURE

2.1 A compatible dust cap is installed on a rotatable Phase I adaptor. A Torque Test Tool is then installed on the dust cap and three static torque measurements are taken. If the resulting average static torque is less than, or equal to, the maximum allowable torque specified by CARB, the adaptor is verified to be in compliance. If the adaptor complies with the maximum static torque, a test is conducted to verify that the adaptor rotates a minimum of 360 degrees.

3. BIASES AND INTERFERENCES

3.1 Missing or defective gaskets in the dust cap may bias the results towards compliance as a dust cap may slip on the rotatable adaptor prior to the adaptor rotating. This bias is eliminated by ensuring that the dust cap seal is securely in place and does not show signs of excessive wear or damage.

3.2 Gasoline or other lubricants on the sealing surface of the rotatable adaptor or the dust cap seal can cause the dust cap to slip and may bias the results towards compliance. This bias is eliminated by ensuring that the sealing surface of the rotatable adaptor and dust cap is clean, dry and free of lubricants.

3.3 A new adaptor or one which has not been rotated for some time may have a high initial torque.

4. SENSITIVITY, RANGE, AND PRECISION

4.1 The measurable static torque is dependent upon the range of the Torque Wrench used for the test. The recommended Torque Wrench range specified in Section 5.1 provides sufficient precision at the maximum allowable static torque.

5. EQUIPMENT

5.1 Torque Wrench. Use a compatible Torque Wrench to measure the static torque of the rotatable vapor recovery adaptor.

5.1.1 The minimum full-scale range of the Torque Wrench shall be 144 pound-inches (12 pound-foot) with minimum accuracy of 1.0 percent.

Figure 1
Phil-Tite Torque Test Tool

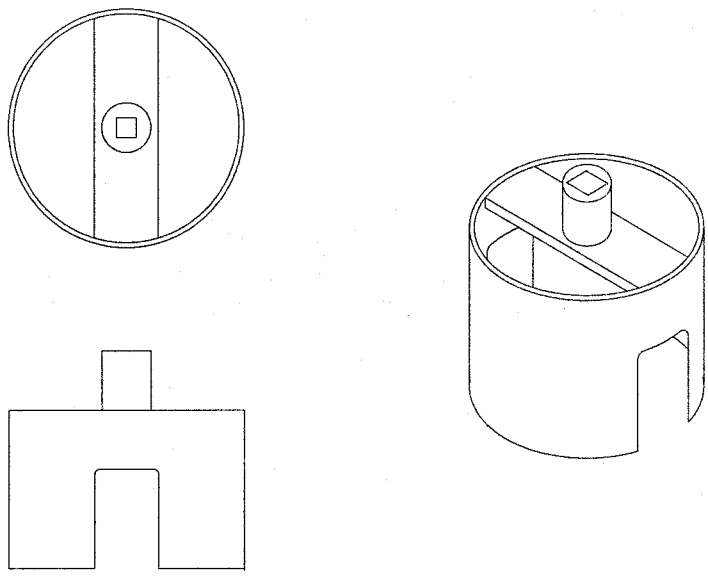

5.2 Static Torque Test Assembly. Use a compatible dust cap and rotatable adaptor Torque Test Tool, Phil-Tite Part Number 6004 or equivalent. A depiction of the Phil-Tite Torque Test Tool is shown in Figure 1. An example of a complete Static Torque Test Assembly is shown in Figure 2.

5.3 Traffic Cones. Use traffic cones to encircle the Phase I area while the test is being conducted.

5.4 Socket Extension. If required to conduct testing, use a compatible socket extension that does not exceed 12 inches in length.

Figure 2
Static Torque Test Assembly

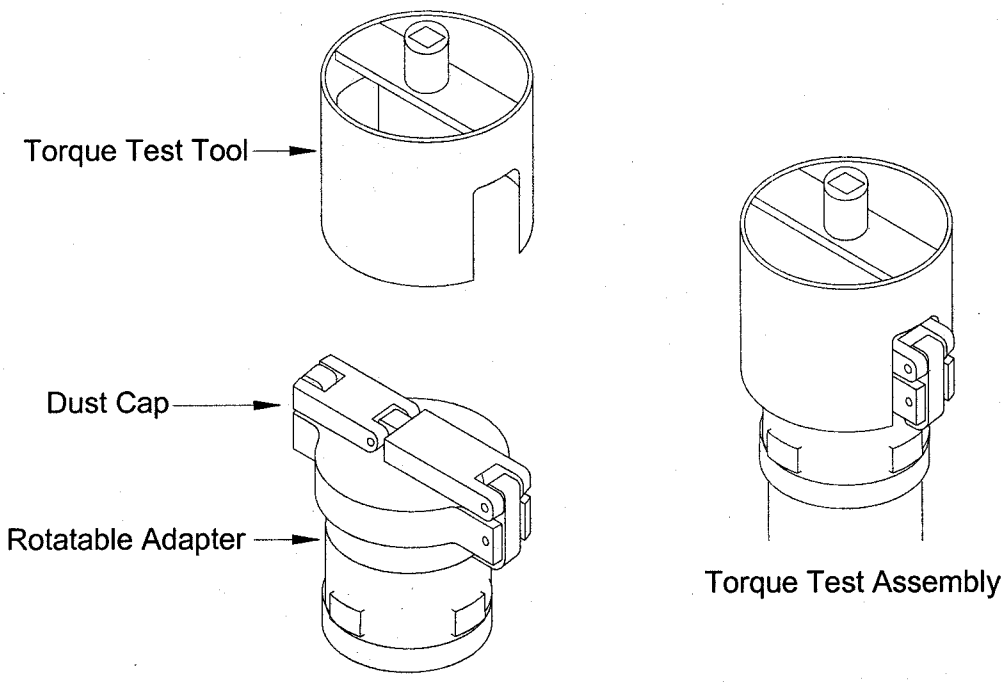

6. PRE-TEST PROCEDURES

6.1 Place the traffic cones around the perimeter of the Phase I spill containment buckets, allowing sufficient space to safely conduct the test.

6.2 Remove the lids of the Phase I spill containment buckets. Visually determine that the adaptors are of the rotatable design.

6.3 Inspect the dust caps to ensure that the caps and gaskets are intact and do not show signs of excessive wear or damage.

6.4 Inspect the rotatable adaptors. If the adaptors are wet or covered with a lubricant, wipe the adaptors clean to ensure maximum friction between the dust cap and the adaptor seal surface.

7. TEST PROCEDURE

7.1 Install the dust cap on the Phase I rotatable adaptor.

7.2 Install the Torque Test Tool on the dust cap as shown in Figure 2.

7.3 Install the Torque Wrench into the Torque Test Tool. If the spill containment bucket is too deep to allow connection of the Torque Wrench, use a compatible socket extension to reach into the bucket to the Torque Test Tool. The socket extension shall not exceed 12 inches in length.

7.4 Place one hand on top of the Torque Wrench, directly above the center of the Torque Test Tool to keep the wrench level when applying pressure. Gently apply an even, steady pressure to the Torque Wrench while observing the adaptor for rotation. Once the adaptor begins to rotate, record the measured static torque on the data sheet.

7.5 Repeat section 7.5 two additional times for each adaptor tested.

7.6 Verification of rotation. This test is conducted following a successful static torque test. Place a ratchet with socket extension (or equivalent) into the Torque Test Tool, or equivalent. Rotate the adaptor a minimum 360 degrees using the socket wrench. Note: do **not** use the torque wrench to check for 360-degree rotation.

8. POST-TEST PROCEDURES

8.1 Remove the Torque Test Assembly and replace the appropriate lids on each of the Spill Containment Buckets.

8.2 Remove the traffic cones from the Phase I area.

8.3 Calculate the arithmetic average of the three tests for each adaptor tested and record on the data sheet.

9. REPORTING RESULTS

9.1 Report the station, adaptor, rotation, and static torque measurements on the data sheet as shown on Form 1. Districts may require the use of alternate data sheets provided they include the same parameters identified on Form 1.

10. ALTERNATE PROCEDURES

10.1 This procedure shall be conducted as specified. Modifications to this test procedure shall not be used to determine compliance unless prior written approval has been obtained from the CARB Executive Officer, pursuant to Section 14 of Certification Procedure CP-201.

Form 1
Static Torque and Rotation Determination of Phase I Adaptors

Test Company:	**Conducted By:**
Test Date:	**Facility Name:**
Facility Address:	**City:**

Measurement Units: (circle one): pound-inches pound-foot

Vapor Adaptor 1	Vapor Adaptor 2	Vapor Adaptor 3	Vapor Adaptor 4
Brand:	**Brand:**	**Brand:**	**Brand:**
Model:	**Model:**	**Model:**	**Model:**
Prod. Grade:	**Prod. Grade:**	**Prod. Grade:**	**Prod. Grade:**
Torque 1:	Torque 1:	Torque 1:	Torque 1:
Torque 2:	Torque 2:	Torque 2:	Torque 2:
Torque 3:	Torque 3:	Torque 3:	Torque 3:
Average:	**Average:**	**Average:**	**Average:**
360° Rotation Yes ☐ No ☐	360° Rotation Yes ☐ No ☐	360° Rotation Yes ☐ No ☐	360° Rotation Yes ☐ No ☐

Product Adaptor 1	Product Adaptor 2	Product Adaptor 3	Product Adaptor 4
Brand:	**Brand:**	**Brand:**	**Brand:**
Model:	**Model:**	**Model:**	**Model:**
Prod. Grade:	**Prod. Grade:**	**Prod. Grade:**	**Prod. Grade:**
Torque 1:	Torque 1:	Torque 1:	Torque 1:
Torque 2:	Torque 2:	Torque 2:	Torque 2:
Torque 3:	Torque 3:	Torque 3:	Torque 3:
Average:	**Average:**	**Average:**	**Average:**
360° Rotation Yes ☐ No ☐	360° Rotation Yes ☐ No ☐	360° Rotation Yes ☐ No ☐	360° Rotation Yes ☐ No ☐

Comments: _____

_____