California Environmental Protection Agency

Air Resources Board

ARB Approved

Installation, Operation and Maintenance Manual

For the Phil-Tite Phase I EVR Vapor Recovery System

Approved: June 19, 2001
Amended: July 12, 2002
Amended: September 16, 2003
Amended: April 27, 2004
Amended: June 30, 2005
Amended: May 17, 2006
Amended: June 29, 2006

NOTICE:

The **ARB Approved Installation, Operation and Maintenance Manual for the Phil-Tite Phase I EVR System** describes the tools and methods required to install the Phil-Tite Phase I EVR System. Unless specified otherwise, only technicians that are trained and certified by Phil-Tite (i.e. Phil-Tite Certified Technicians) are able to perform installation, maintenance or repairs of components manufactured by Phil-Tite or the warranty will be void. A list of Phil-Tite Certified Technicians can be viewed at http://www.phil-tite.com/index.html.

To schedule a training class, Phil-Tite can be contacted at the following:

Stan Brodecki, Allan Busch, or Steve Langlie
Enhanced Vapor Recovery Systems
Franklin Fueling Systems
Phone: 800-225-9787
Email: brodecki@franklinfueling.com
busch@franklinfueling.com
langlie@franklinfueling.com

It is the responsibility of each Phil-Tite Certified Technician to be familiar with the current requirements of state, federal and local codes for installation and repair of gasoline dispensing equipment. It is also the responsibility of the Phil-Tite Certified Technician to be aware of all necessary safety precautions and site safety requirements to assure a safe and trouble free installation.

Summary of Maintenance Activities Required of the Phil-Tite Phase 1 Vapor Recovery System[1]

Component	Interval	Maintenance To Be Performed
Pressure/Vacuum Vent Valve Husky Model 4885	Annual	1. Remove screws that hold top cover on. 2. Remove any debris that might be sitting inside the lower cover. 3. Check the drain holes in the lower cover for blockage. 4. Do not remove the two (2) screens. 5. Reinstall the top cover and retaining screws. 6. Tighten the screws firmly.
Spill Container Drain Valve Phil-Tite "All Models with Drain Valves"	Every 3 years following startup	1. Remove standing liquid prior to testing (note: remove standing liquid following each fuel delivery). 2. Remove any debris or accumulated dirt from container. 3. Test the drain valve using ARB procedure TP-201.1C or TP-201.1D as applicable. 4. If the drain valve passes testing, no further maintenance is necessary. If the drain valve fails testing, continue with steps 5 through 12. 5. Remove the snap-ring and foam filter from the inside of container. Inspect the foam filter, ensure that it is not torn or damaged. Replace if necessary. 6. With the snap ring and foam filter removed, loosen the allen screw in the top clamp and remove the valve assembly by pulling up on the valve handle. 7. Remove the O-ring from the bottom of the container and inspect for cuts or damage. Replace if necessary. 8. Inspect the boot-screen assembly and ensure there are no cracks or cuts. If the boot-screen assembly requires replacement, loosen the allen screw on the bottom clamp and separate clamp-handle assembly from boot screen assembly. 9. Inspect the O-ring on the shut off collar for cuts or damage. Replace if necessary. 10. Reassemble the drain valve in reverse order. Ensure that the valve assembly is properly adjusted so that the assembly moves up and down freely without binding. **NOTE:** The bail handle must snap into place when moved into the closed position. 11. Test the drain valve using ARB procedure TP-201.1C or TP-201.D as applicable. If a failure still persists, remove the container and inspect the flat lower seal between the riser and spill container. Replace if necessary. 12. Reinstall the container using the installation instructions provided and test the drain valve using ARB procedure TP-201.1C or TP-201-1D as applicable.

[1] **These maintenance requirements shall not circumvent use of the manufacturer's installation and maintenance instructions. Maintenance contractors or owner/operators shall refer to the manufacturers complete installation and maintenance instructions found herein to ensure that all maintenance and torque requirements are met.**

Summary of Maintenance Activities Required of the Phil-Tite Phase 1 Vapor Recovery System[1]

Dust Caps "All Models"	Annual	Visually inspect the seal in cap and replace if damaged or missing.
Vapor Recovery Adaptor Phil-Tite SWV-101-B	Annual	The Phil-Tite rotatable adaptors are not field serviceable with the exception of the vapor poppet or vapor poppet seal found on the SWV-101-B. 1. Depress the vapor poppet and release. Ensure that the poppet returns to the closed position. This will verify that the spring mechanism is working properly. 2. Test the poppet seal by applying a soap solution to the poppet while the underground storage tank is under a positive gauge pressure of at least 2.00 inches W.C. If the facility continuously operates under vacuum, a bag test may be used. Place a clear plastic bag over the adaptor and make sure it is sealed to the sides of the adaptor. 3. If no bubbles appear at the poppet area under positive pressure or the bag test shows no signs of the bag collapsing, no further maintenance is required. If bubbles appear around the poppet seal or the bag collapsed onto the adaptor, continue with steps 3 through 10 to repair the poppet seal. 4. Remove the SWV-101-B adaptor from the spill container riser using an installation tool (Phil-Tite Tool Kit #T-7043-1) 5. Using a screwdriver, hook the snap ring on the inside of the adaptor and remove. 6. After removing the snap ring, remove the brass spider, spring and vapor poppet through the bottom of the adaptor. 7. With the vapor poppet removed inspect the poppet and poppet seal for cuts, tears or damage. Replace if necessary. 8. Reassemble the vapor poppet spring and brass spider in the reverse order from which they were removed. 9. Replace the snap ring and actuate the poppet by hand, making sure the assembly is secure and actuates properly. 10. Reinstall and properly torque the SWV-101-B using the provided installation and maintenance instructions. 11. Re-test the poppet seal as described in step 1 and 2.

[1] **These maintenance requirements shall not circumvent use of the manufacturer's installation and maintenance instructions. Maintenance contractors or owner/operators shall refer to the manufacturers complete installation and maintenance instructions found herein to ensure that all maintenance and torque requirements are met.**

Summary of Maintenance Activities Required of the Phil-Tite Phase 1 Vapor Recovery System[1]

Ball Floats OPW"-53VML, 30MV	Every 3 years following startup	Visually inspect the valve for damage, contamination, corrosion, freedom of movement of the ball float and check the bleeder orifice for proper airflow. Replace if damaged or corroded.
Universal Valve Model 37 Series	Every 3 years following startup	Inspect the Model 37 to ensure proper operation. Check to ensure that the ball moves freely within the cage and that the bleed hole allows free airflow.
Drop Tubes OPW 61T	Annual	Visually inspect Drop Tube to see if it is installed and ensure that the bottom of tube is within 6 inches of the bottom of tank. Test the drop tube seal with ARB procedure TP-201.1C or TP-201.1D as applicable. If the drop tube seal passes testing, no further maintenance is required. If the drop tube seal fails testing, replace the drop tube seal with OPW P/N: H11931M for 4" tubes. Re-test the drop tube seal with ARB procedure TP-201.1C or TP-201.1D as applicable.
Drop Tube Overfill Prevention Device OPW 61SO-PT	Annual	Annually, inspect the flapper in the 61-SO-PT to see that it is open by looking down the drop tube opening. Test the 61-SO-PT seals with ARB procedure TP-201.1D. If the drop tube passes testing, no further maintenance is required. If the drop tube fails testing, replace the drop tube seal with Phil-Tite 85039-DT. Re-test the 61-SO-PT with ARB procedure TP-201.1D. If this does not correct the leak the 61-SO-PT needs to be replaced.
Tank Gauge Components Morrison Brothers 305 series Ever-Tite 4097 series Veeder-Root 312020-952	Annual	Visually inspect cap to see that it is not missing any seals and is properly installed.

[1] **These maintenance requirements shall not circumvent use of the manufacturer's installation and maintenance instructions. Maintenance contractors or owner/operators shall refer to the manufacturers complete installation and maintenance instructions found herein to ensure that all maintenance and torque requirements are met.**

Phil-Tite Enterprises

Phase I EVR Equipment Installation Check List

Installing Products per CARB Executive Order VR-101- (G)

Date: _____

Site Location:*(name)* _____ Installing Contractor:*(name*

_____

Address _____ Address _____

City/State_____City/State_____

Contact/Phone _____Contact/Phone _____

Tank Number:_____ Product:_____ Capacity:_____

Tank Number:_____ Product:_____ Capacity:_____

Tank Number:_____ Product:_____ Capacity:_____

Installing Technician: *(name)* _____ Signature: _____

Technician Certification Number:_____

Yes/No	Initials

1. Is all of the installed equipment for Phase I EVR listed in CARB Executive Order (E.O.) VR-101-G?

Note: All Phase I EVR installed equipment must be listed in E.O. VR-101- G. See attached Exhibit 1 Listing Checklist, and mark/check off each item installed.

Yes/No	Initials

2. Have all tank risers been cut to the correct lengths and correctly installed into the tank bungs using an approved pipe dope?

Yes/No	Initials
Yes/No	Initials

3. Do all tank risers that have a gasket/seal cap and/or spill collector have an M/F 4X4 Riser Adaptor installed?

   a. Are all M/F 4X4 Riser Adaptors installed onto tank risers using approved pipe dope and torque to _____ ft. lbs.?

Yes/No	Initials

4. Has the sealant (epoxy) been allowed to cure 4 to 6 hours before installation?

Yes/No	Initials

5. Fill Riser – Is the Drop Tube installed (under the spill collector) using Phil-Tite Special 'O' Ring (85039-DT) with the flared end on top of the M/F 4X4 Riser Adaptor?

Note: Phil-Tite's 61SO-PT drop tube with mechanical overfill prevention valve must be cut to the correct length and the upper end flared using Flaring Tool T-6100-FT before installing into the tank riser.

Phil-Tite Enterprises
Phase I EVR Equipment Installation Check List (con't.)
Installing Products per CARB Executive Order VR-101- (G)

Yes/No	Initials

6. Are the Spill Collectors installed onto the M/F 4X4 riser adaptors using approved anti- seize compound or silicon spray and torque to _____ ft. lbs.?

Yes/No	Initials

7. Are the Fill and Vapor Swivel Adaptors installed onto the spill collector risers using an approved anti-seizing compound or spray silicon and torque to_____ ft. lbs.?

Yes/No	Initials
Yes/No	Initials

8. Pressure Vacuum Vent Valve – Is there an EVR P/V Vent valve installed on the top of each (gasoline) vent pipe (a maximum of three EVR P/V valves per GDF) or manifold?

   a. P/V vent valve(s) torque to _____ ft. lbs.

Yes/No	Initials
Yes/No	Initials

9. Tank Gauge Port Cap and Adaptor – If installed,

   a. Has an M/F 4X4 Riser Adaptor been installed onto the tank gauge riser using an approved pipe dope and torque to _____ ft. lbs.?

   b. Is the Tank Gauge Adaptor installed onto the M/F/ 4X4 riser adaptor using an approved anti-seize compound and torque to _____ ft. lbs.?

Yes/No	Initials
Yes/No	Initials
Yes/No	Initials

10. Ball Float Valve and Extractor Assembly – If installed,

    a. Is the extractor installed into the tank bung using an approved pipe dope and torque to _____ ft. lbs.?

    b. Is the correct size Ball Float assembly installed into the extractor cage using an approved pipe dope and torque to _____ ft. lbs.?

    c. Is the Ball Float and Cage assembly installed into the tank extractor and torque to _____ ft. lbs.?

Phil-Tite Phase I Vapor Recovery System Equipment List
Exhibit 1 Listing Checklist

On line below, write out what configuration you used. Follow the legend below for each series spill container (*e.g. you would write out:* **85100-1F-15** *if you had a 85000-1 series, 15 gallon replacement product spill container.)*

Configuration used: _____

Equipment	**Manufacturer/Model Number**
Spill Container	☐Phil-Tite 85000 series ☐Phil-Tite 85000-1 series

85000 and 85000-1 series legend:
85*W*0*X*-*YYY*-*ZZZ* (85000 series)
85*W*0*X*-1*YYY*-*ZZZ* (85000-1 series)

W represented by:
☐ 0 = preassembled spill container assembly
☐ 1 = replacement spill container

X represented by:
☐ 0 = product spill container
☐ 1 = vapor spill container

YYY represented by:
☐ 15 = 15-gallon capacity
☐ EXT = external for sump configuration (not available for 85000-1 series)
☐ NV = Vapor (replacement spill container)
☐ F = Product (replacement spill container)
☐ S = Stainless Steel (SS) Sleeve
☐ GS = Stainless Steel (SS) Sleeve and Gravel Shield

ZZZ represented by:
☐ 15 = 15-gallon capacity
☐ EXT = external for sump configuration (not available for 85000-1 series)
☐ NV = Vapor (replacement spill container)
☐ F = Product (replacement spill container)
☐ S = Stainless Steel (SS) Sleeve
☐ GS = Stainless Steel (SS) Sleeve and Gravel Shield

Spill Container Lid	☐Phil-Tite 85011 (not required with sump configuration lid)
Sump Configuration Lid[1]	☐Fibre-Lite FL-36 inch

[1] Component optional for vapor recovery system configuration; other requirements may apply.

Exhibit 1 Listing Checklist (con't.)

Debris Bucket	☐Phil-Tite PP-1005 TB (product) (required) ☐Phil-Tite PP-1005 TBP (vapor) (not required)
Product Adaptor **Vapor Adaptor** **Riser Adaptor**	☐Phil-Tite SWF-100-B ☐Phil-Tite SWV-101-B ☐Phil-Tite M/F4X4
Riser Support Bracket	☐Phil-Tite M-1600
Dust Cap	☐Morrison Brothers 323C-0100ACEVR (vapor) ☐Morrison Brothers 305C-0100ACEVR (product) ☐OPW 1711T-EVR (vapor) ☐OPW 634TT-EVR (product)
Pressure/Vacuum Vent Valve	☐Husky 4885
Tank Gauge Port Components	☐Ever-Tite 4097AGBR (threaded adaptor) ☐Ever-Tite 4097AGMBRNL (adaptor) ☐Ever-Tite 4097MBR (double handle cap) ☐Veeder-Root 312020-952 (cap & adaptor) ☐Morrison Brothers 305XPA1100AKEVR (cap and adaptor kit) ☐Morrison Brothers 305-0200AAEVR (replacement adaptor) ☐Morrison Brothers 305XP-110ACEVR (replacement cap)
Extractor[1]	☐Universal V421 ☐OPW 233
Ball Float Vent Valve[1]	☐Universal 37 ☐OPW 53VML ☐OPW 30MV
Drop Tube Overfill Prevention Device[1]	☐Phil-Tite 61SO-PT
Drop Tube[1]	☐OPW 61-T (various lengths)
Riser Offset[1]	☐Phil-Tite M-6050
Double Fill[1]	☐Phil-Tite (configuration only)
Sump Configuration[1]	☐Phil-Tite 85000-EXT-CA2
Tank Bottom Protector[1]	☐Phil-Tite TBP-3516

[1] Component optional for vapor recovery system configuration; other requirements may apply.

Exhibit 1 Listing Checklist (con't.)

Table 1
Components Exempt from Identification Requirements

Component Name	Manufacturer	Model Number
Drop Tube	OPW	61-T Straight Drop Tube
Ball Float	Universal	Model 37
Tank Gauge Port Components	Ever-Tite/Veeder-Root	4097 AGBR, AGMBRNL, MBR
	Morrison Brothers	305XPA1100AKEVR (cap and adaptor kit) 305-0200AAEVR (replacement adaptor) 305XP-1100ACEVR (replacement cap)
Riser Adaptor	Phil-Tite	M/F4X4
Riser Offset	Phil-Tite	M-6050
Riser Support Bracket	Phil-Tite	M-1600

The components in Table 2 may not be installed as a new or replacement part on or after September 1, 2002. These components, if installed prior to September 1, 2002, may be used for the remainder of their useful life.

Table 2

Component Name	Manufacturer	Model Number
Drop Tube	EBW	782-204 (various lengths)
	Emco Wheaton	A0020 (various lengths)
Extractor Fitting	EBW	3XX Series
	Emco Wheaton	A0079 Series

Exhibit 1 Listing Checklist (con't.)

Torque Values for 85000 and 85000-1 Series Spill Containers

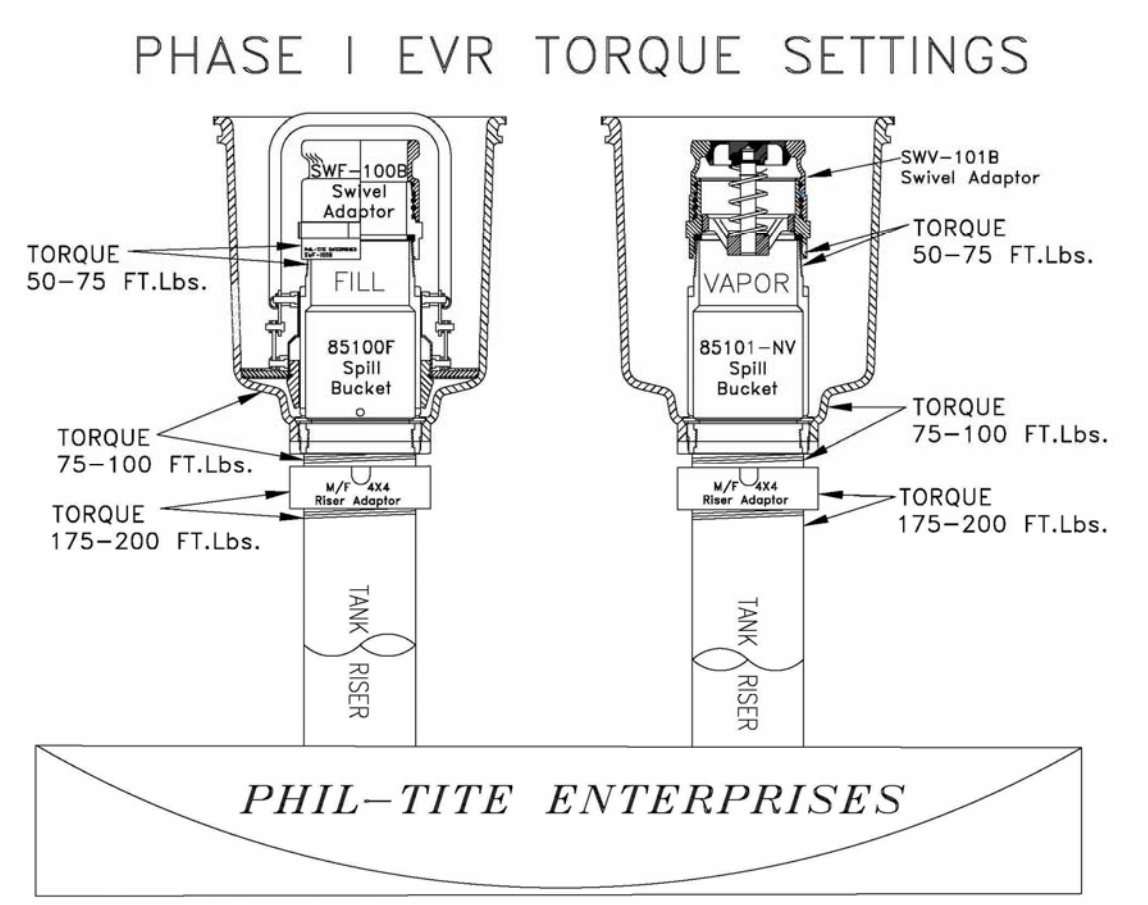

Phil-Tite Phase 1 Vapor Recovery System
Installation, Operation and Maintenance Manual

Table of Contents

Equipment	Manufacturer/Model Number		Figure	Page
Typical Installation (Product Side)			**A-1**	**14**
Typical Installation (Vapor Side)			**A-2**	**15**
Spill Container	Phil-Tite 85000 series and 85000-1 series		**B-1**	**16**
Phil-Tite 85011 Spill Container Lid			**B-2**	**18**
Debris Bucket	Phil-Tite	PP-1005 TB (product)(required)	**B-3**	**19**
	Phil-Tite	PP-1005 TBP (vapor)(optional)		
Product Adaptor	Phil-Tite	SWF-100-B	**C-1**	**20**
Vapor Adaptor	Phil-Tite	SWV-101-B	**C-1**	**20**
Riser Adaptor	Phil-Tite	M/F 4X4	**D-1**	**22**

85000 and 85000-1 series legend:
85*W*0*X*-*YYY*-*ZZZ* (85000 series)
85*W*0*X*-1*YYY*-*ZZZ* (85000-1 series)

W represented by:
0 = preassembled spill container assembly
1 = replacement spill container

X represented by:
0 = product spill container
1 = vapor spill container

YYY represented by:
15 = 15-gallon capacity
EXT = external for sump configuration (not available for 85000-1 series)
NV = Vapor (replacement spill container)
F = Product (replacement spill container)
S = Stainless Steel (SS) Sleeve
GS = Stainless Steel (SS) Sleeve and Gravel Shield

ZZZ represented by:
15 = 15-gallon capacity
EXT = external for sump configuration (not available for 85000-1 series)
NV = Vapor (replacement spill container)
GS = Stainless Steel (SS) Sleeve and Gravel Shield

Table of Contents

Equipment	Manufacturer/Model Number		Figure	Page
Dust Cap	Morrison Brothers	323C-0100ACEVR (vapor)	**E-1**	**23**
	Morrison Brothers	305C-0100ACEVR (product)	**E-1**	**23**
	OPW	1711T-EVR (vapor)	**E-2**	**24**
	OPW	634TT-EVR (product)	**E-2**	**24**
Pressure/Vacuum Vent Valve				
	Husky 4885		**F-1**	**25**
Tank Gauge Port Components				
	Ever-Tite 4097AGBR (threaded adaptor)		**G-1**	**26**
	Ever-Tite 4097AGMBRNL (adaptor)		**G-1**	**26**
	Ever-Tite 4097MBR (double handled cap)		**G-1**	**26**
	Veeder-Root 312020-952 (cap & adaptor)		**G-2**	**27**
	Morrison Brothers	305XPA1100AKEVR (cap and adaptor kit)	**G-3**	**28**
	Morrison Brothers	305-0200AAEVR (replacement adaptor)	**G-3**	**28**
	Morrison Brothers	305XP-110ACEVR (replacement cap)	**G-3**	**28**
Extractor[1]	Universal	V421	**H-1**	**29**
	OPW	233	**H-2**	**30**
Ball Float[1]	Universal	37	**H-1**	**29**
	OPW	53VML	**H-2**	**30**
	OPW	30MV	**H-2**	**30**
Drop Tube[1]	OPW	61-T Straight Drop Tube	**I-1**	**32**
Drop Tube Overfill Prevention Device[1]				
	Phil-Tite	61SO-PT	**I-2**	**33**
Riser Offset[1]	Phil-Tite	M-6050	**J-1**	**46**
Riser Support Bracket	Phil-Tite	M-1600	**K-1**	**47**
Double Fill[1]	Phil-Tite	(configuration only)	**L-1**	**48**
Sump Configuration[1]	Phil-Tite	85000-EXT-CA2	**L-2**	**49**

[1] Component optional for vapor recovery system configuration; other requirements may apply.

Figure A-1

Typical Product Side Installation Using Phil-Tite System

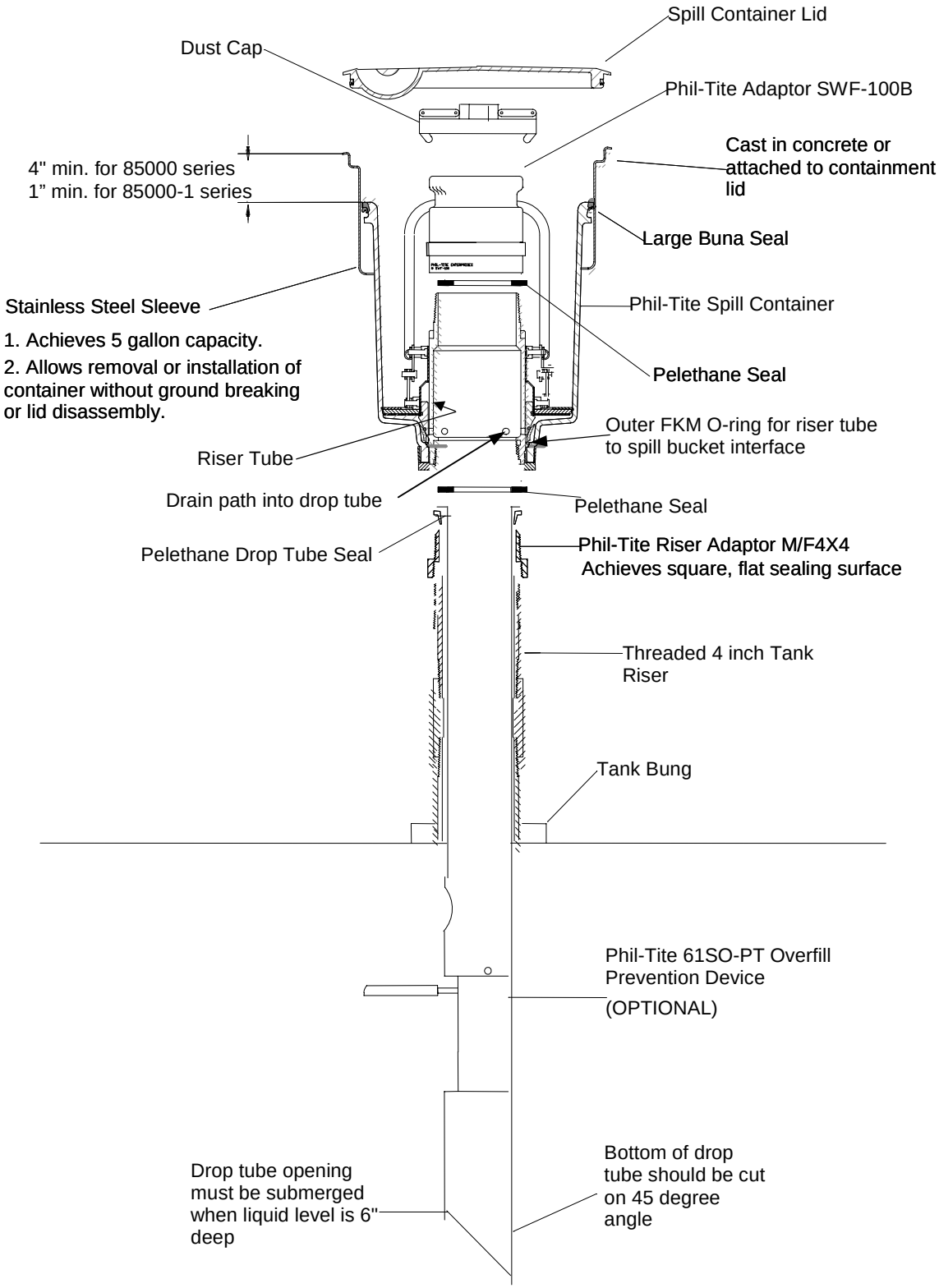

Figure A-2

Typical Vapor Recovery Side Installation Using Phil-Tite System

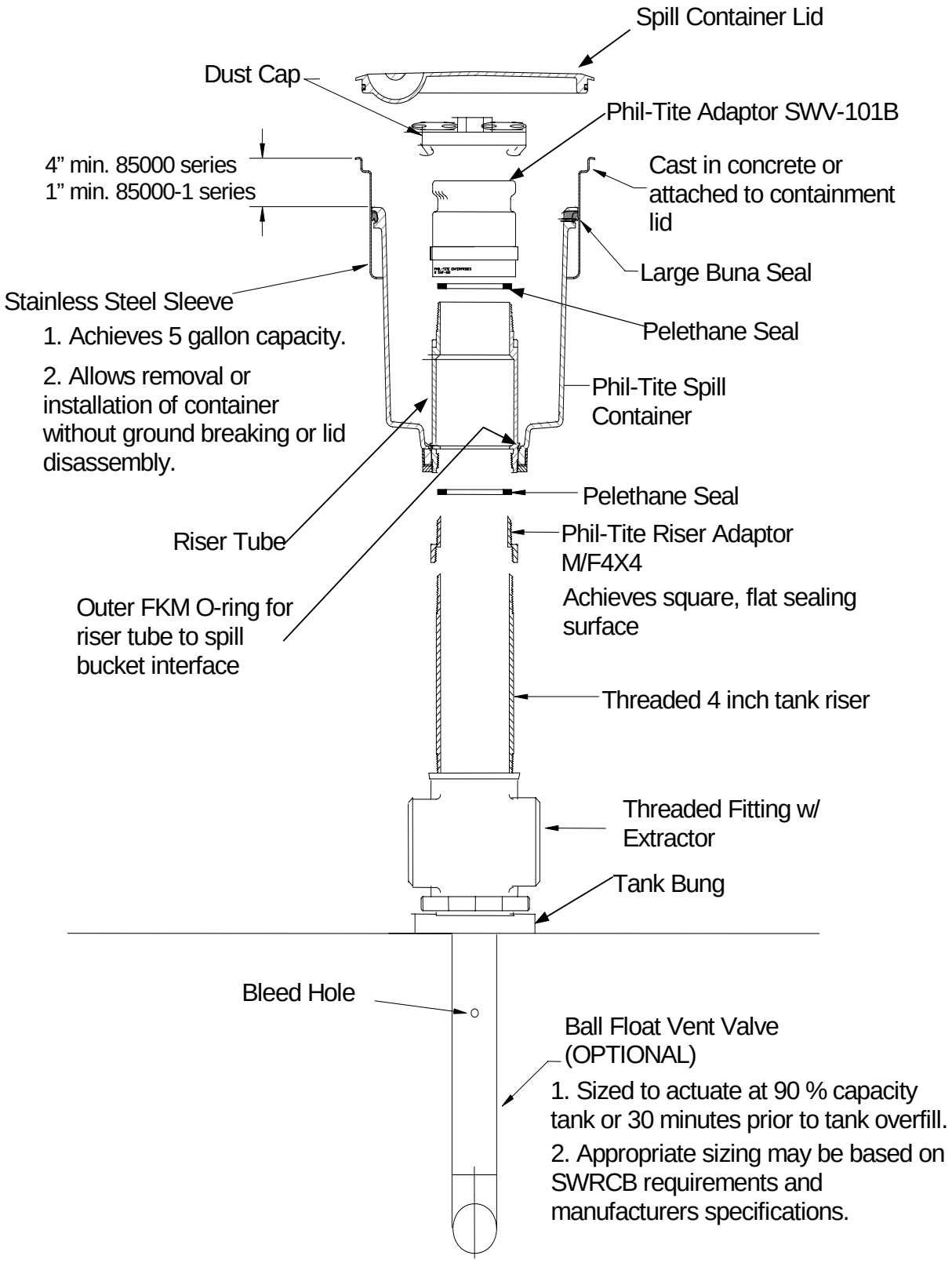

Figure B-1

Phil-Tite 85000 series and 85000-1 series Product and Vapor Spill Containers

Product

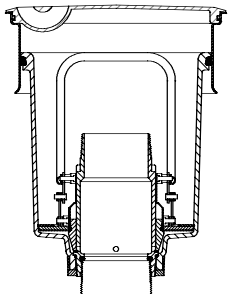

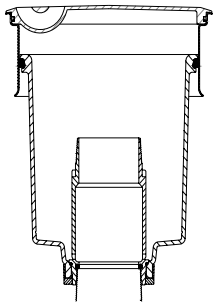

Vapor

PHIL-TITE - SPILL CONTAINERS

Phil-Tite Spill Containers are designed to provide easy installation or removal of the spill container without the need for timely excavation, or disassembly of secondary containment covers. Phil-Tite's drain valves provide fast and complete removal of excess liquid spilled during a gasoline delivery operation while maintaining a vapor tight, reliable seal that eliminates leaks into the environment.

INSTALLATION INSTRUCTIONS:

1) Ensure there is adequate clearance to provide at least **4"** for the 85000 series, or **1"** for the 85000-1 series) between the top of the Spill Container and the top of the stainless steel sleeve once final installation is complete. Be sure to include the distance required of the Phil-Tite Model M/F4X4 Riser Adaptor (installed below the container).

2) Inspect the container ensuring that the flat lower seal is in place and properly oriented for sealing with the M/F4X4 Riser Adaptor.

3) Inspect the inner foam filter located inside the container. The filter should be resting on the bottom, secured by the snap ring.

4) Move the handle back and forth making sure that the assembly rises when moved to the open position and compresses when closed. The bail handle should move freely with no binding and snap into place when moved to the closed position.

5) NOTE: DO NOT USE ANY TYPE OF THREAD SEALING COMPOUND FOR SPILL CONTAINER INSTALLATION! Apply an even coat of Silicon based spray to the larger, outer seal of the container and the inside of the stainless steel sleeve to ease insertion. By hand, thread the container onto the M/F4X4 Riser Adaptor taking care not to cross thread. Phil-Tite Spill Containers create an optimum, leak free seal when properly tightened to the M/F4X4 Riser Adaptor as described in item #6.

6) Using an approved installation tool (Phil-Tite #T-7043-1 Tool Kit) and torque wrench, tighten the Spill Container onto the M/F4X4 Riser Adaptor and torque to a value between **75 and 100 ft. lbs.**

7) Ensure there is at least **4"** for the 85000 Series, or **1"** for the 85000-1 Series) between the top of the container and top of the stainless steel sleeve. Install a rotatable adaptor and dust cap.

8) Test the drain valve using ARB procedure TP-201.1C or TP-201.1D.

THE USE OF UNAPPROVED TOOLS, OR IMPROPERLY TORQUING OF THE SPILL CONTAINER WILL VOID ANY AND ALL APPLIED WARRANTIES.

MAINTENANCE INSTRUCTIONS
(Every 3 years following startup)

1) Remove standing liquid prior to testing (note: remove standing liquid following each fuel delivery)

2) Remove any debris or accumulated dirt from the container.

3) Test the drain valve using ARB procedure TP-201.1C or TP-201.1D

4) If the drain valve passes testing, no further maintenance is necessary. If the drain valve fails testing, continue with steps 5 through 12.

5) Remove the snap-ring and foam filter from the inside of container. Inspect the foam filter, ensure that it is not torn or damaged. Replace if necessary.

6) With the snap ring and foam filter removed, loosen the allen screw in the top clamp and remove the valve assembly by pulling up on the valve handle.

7) Remove the 'O' Ring from the bottom of the container and inspect for cuts, or damage. Replace if necessary.

8) Inspect the boot-screen assembly and ensure there are no cracks cuts. If the boot-screen assembly requires replacement, loosen the allen screw on the bottom clamp and separate clamp-handle assembly form the boot screen assembly.

9) Inspect the O-ring on the shut-off collar for cuts or damage. Replace if necessary.

10) Reassemble the drain valve in reverse order. Ensure that the valve assembly is properly adjusted so that the assembly moves up and down freely without binding. NOTE: The bail handle must snap into place when moved into the closed position.

11) Test the drain valve using ARB test procedure TP-201.1C or TP-201.1D. If a failure still persists, remove the container and inspect the flat lower seal between the Riser Adaptor and spill container. Replace if necessary.

12) Reinstall the container using the installation instructions provided and test the drain valve assembly using ARB test procedure TP-201.1C or TP-201.1D.

SPECIFICATION:
Leak Rate less than or equal to 0.17CFH at 2 inches W.C.

Warranty cards for Phil-Tite 85000 and 85000-1 series Spill Containers

Phil-Tite Enterprises, Inc.
3732 Electro Way
Redding, CA 96002
Phone - 530-223-7400
Fax - 530-223-7418

WARRANTY

This product is warranted by Phil-Tite Enterprises, Inc. against defective material and workmanship for 1 (one) year from installation date. We will repair/replace, as we deem necessary, product that has been verified defective by a representative of our company. Any damage caused by either freight or wrongful installation are not covered under this warranty. This warranty does not cover normal wear, or force majeure - caused by fire, flood, earthquake, explosion, war, or acts of God. Seals and O-rings are not a warranty item. Warranty is null and void if a) item is disassembled, b) item is installed improperly, or c) warranty label has been tampered with or is removed from product.

Expiration Date:_____

Serial Number:_____

Model Number:_____

Mfg. Number:_____

TO BE FILLED OUT BY INSTALLER AT THE TIME OF INSTALLATION

This Card MUST be returned for Warranty to be honored

Date of Installation:_____

Installation Company:_____

Address:_____

Telephone: ( )_____

Facility Name:_____

Address:_____

Please detach here, fill out completely, and promptly mail back to Phil-Tite Enterprises.

Place Stamp Here

Phil-Tite Enterprises, Inc.
3732 Electro Way
Redding, CA 96002

OWNERS COPY
TO BE RETAINED ON-SITE WITH FACILITY OWNER

Phil-Tite Enterprises, Inc.
3732 Electro Way
Redding, CA 96002
Phone - 530-223-7400
Fax - 530-223-7418

WARRANTY

This product is warranted by Phil-Tite Enterprises, Inc. against defective material and workmanship for 1 (one) year from installation date. We will repair/replace, as we deem necessary, product that has been verified defective by a representative of our company. Any damage caused by either freight or wrongful installation are not covered under this warranty. This warranty does not cover normal wear, or force majeure - caused by fire, flood, earthquake, explosion, war, or acts of God. Seals and O-rings are not a warranty item. Warranty is null and void if a) item is disassembled, b) item is installed improperly, or c) warranty label has been tampered with or is removed from product.

TO BE FILLED OUT BY INSTALLER AT THE TIME OF INSTALLATION

Expiration Date:_____

Serial Number:_____

Model Number:_____

Mfg. Number:_____

NOTE: Return Warranty registration card must be returned for Warranty to honored.

Date of Installation:_____

Installation Company:_____

Address:_____

_____

Telephone: ( )_____

Figure B-2

Phil-Tite 85011 Spill Container Lid

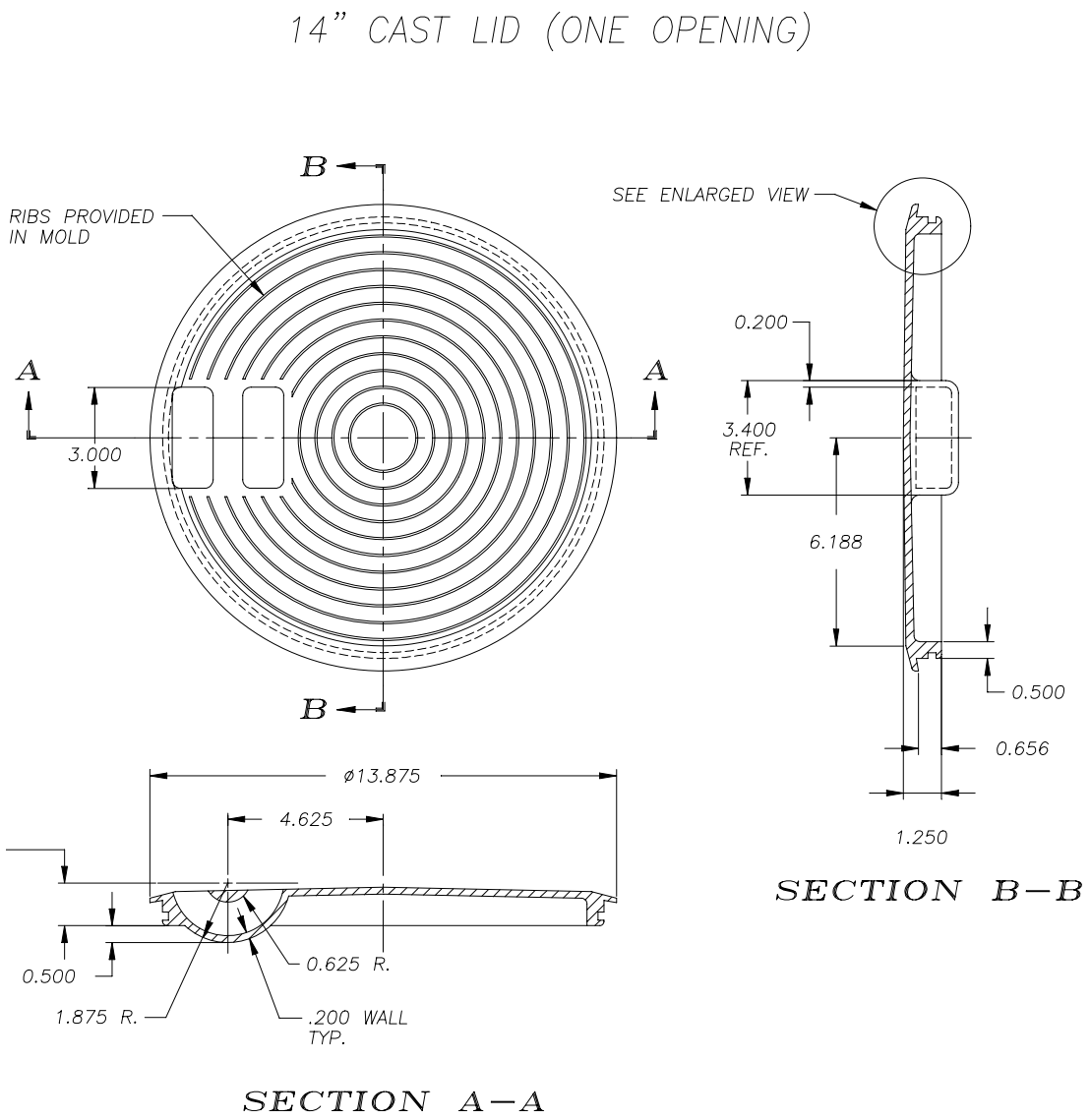

Figure B-3

Phil-Tite Debris Bucket
Part Number PP 1005 TB (Product) (required)
Part Number PP 1005 TBP (Vapor) (optional)
Phil-Tite Hand Pump EP-400-VB (optional)

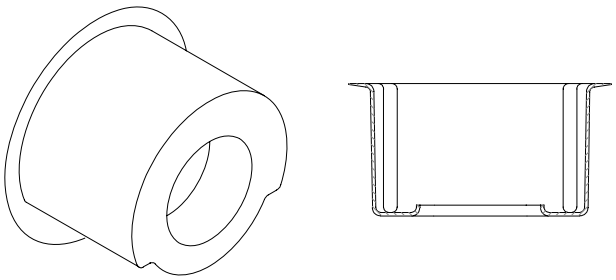

Debris Bucket

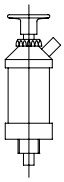

Hand Pump

(For use with vap
debris bucket onl

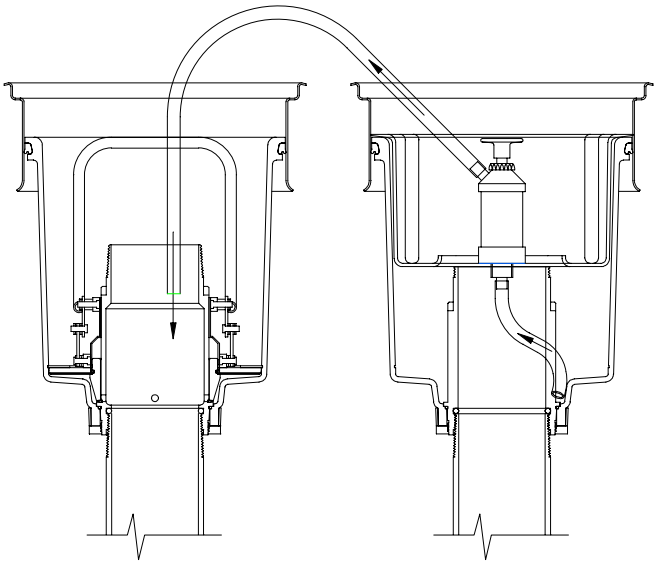

Hand Pump Operation

Figure C-1

Phil-Tite SWF-100-B Rotatable Product Adaptor and Phil-Tite SWV-101B Rotatable Vapor Adaptor

Product

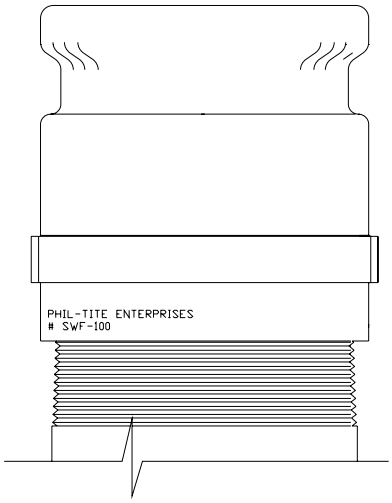

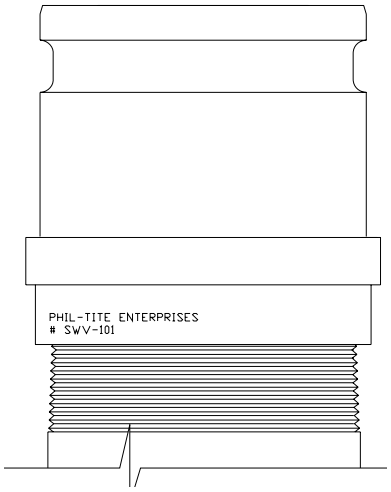

Vapor

PHIL-TITE ROTATABLE ADAPTORS

Phil-Tite Rotatable Adaptors are designed to produce a free turning, 360 degree rotation of a fuel delivery elbow which prevents the adaptors from loosening or overtightening on the spill container riser which prevents leaks into the environment.

INSTALLATION INSTRUCTIONS:

1) Remove the adaptor from the box and inspect for shipping damage. Ensure that the adaptor seal is in place and is free from damage or defects. SWV-101-B Only, ensure that the vapor poppet opens and closes freely by actuating the poppet by hand.

2) DO NOT USE ANY TYPE OF THREAD SEALANT ON THE ADAPTOR OR IT'S MATING THREADS! Phil-Tite adaptors are designed to create a leak free seal when properly tightened as described in item #4.

3) By hand, thread the adaptor onto the spill container riser taking care not to cross thread.

4) Using a torque wrench and an adaptor installation tool (Phil-Tite Tool Kit #T-7043-1), tighten to a torque value between the range of 50 and 75 ft. lbs.

5) Once properly tightened, install a compatible dust cap. The adaptors are ready for operation.

THE USE OF UNAPPROVED TOOLS, OR IMPROPERLY TORQUING OF THE SPILL CONTAINER WILL VOID ANY AND ALL APPLIED WARRANTIES.

PLEASE CONTACT PHIL-TITE ENTERPRISES FOR A SCHEDULE OF "HOW-TO" CLASSES OFFERED FOR THE INSTALLATION OR REPAIR OF ALL PHIL-TITE PRODUCTS.

Specifications: 360-degree rotation
Static Torque less than or equal to 108 lb-inches

MAINTENANCE INSTRUCTIONS:
(annually)

The Phil-Tite rotatable adaptors are not field serviceable with the exception of the vapor poppet or poppet components found on the SWV-101-B Rotatable Vapor Recovery Adaptor.

1) Depress the vapor poppet and release. Ensure that the poppet returns to the closed position. This will verify that the spring mechanism is working properly.
2) Test the poppet seal by applying a soap solution to the poppet while the underground storage tank is under a positive gauge pressure of at least 2.00 inches W.C.
If the facility continuously operates under vacuum, a bag test may be used. Place a clear plastic bag over the adaptor and make sure it is tightly sealed to the sides of the adaptor.
3) If no bubbles appear at the poppet area under positive pressure or the bag test shows no signs of the bag collapsing, no further maintenance is required. If bubbles appear around the poppet seal or the bag collapsed, continue with steps 3 through 10 to repair the poppet or poppet seal.
4) Remove the SWV-101-B adaptor from the spill container riser using an installation tool (Phil-Tite Tool Kit #T-7043-1).
5) Using a screwdriver, hook the snap ring on the inside of the adaptor and remove.
6) After removing the snap ring, remove the brass spider, spring and vapor poppet through the bottom of the adaptor.
7) With the vapor poppet removed inspect the poppet and poppet seal for cuts, tears or damage. Replace if necessary.
8) Reassemble the vapor poppet spring and brass spider in the reverse order from which they were removed.
9) Replace the snap ring and actuate the poppet by hand, making sure the assembly moves freely and closes when released.
10) Reinstall and properly torque the SWV-101-B using the provided installation and maintenance instructions.
11) Re-test the poppet seal as described in steps 1 in 2.

Warranty cards for Phil-Tite Rotatable Adaptors

Phil-Tite Enterprises, Inc.
3732 Electro Way
Redding, CA 96002
Phone - 530-223-7400
Fax - 530-223-7418

WARRANTY

This product is warranted by Phil-Tite Enterprises, Inc. against defective material and workmanship for 1 (one) year from installation date. We will repair/replace, as we deem necessary, product that has been verified defective by a representative of our company. Any damage caused by either freight or wrongful installation are not covered under this warranty. This warranty does not cover normal wear, or force majeure - caused by fire, flood, earthquake, explosion, war, or acts of God. Seals and O-rings are not a warranty item. Warranty is null and void if a) item is disassembled, b) item is installed improperly, or c) warranty label has been tampered with or is removed from product.

Expiration Date:_____

Serial Number:_____

Model Number:_____

Mfg. Number:_____

TO BE FILLED OUT BY INSTALLER AT THE TIME OF INSTALLATION

This Card MUST be returned for Warranty to be honored

Date of Installation:_____

Installation Company:_____

Address:_____

Telephone: ( )_____

Facility Name:_____

Address:_____

Please detach here, fill out completely, and promptly mail back to Phil-Tite Enterprises.

Place Stamp Here

Phil-Tite Enterprises, Inc.
3732 Electro Way
Redding, CA 96002

OWNERS COPY
TO BE RETAINED ON-SITE WITH FACILITY OWNER

Phil-Tite Enterprises, Inc.
3732 Electro Way
Redding, CA 96002
Phone - 530-223-7400
Fax - 530-223-7418

WARRANTY

This product is warranted by Phil-Tite Enterprises, Inc. against defective material and workmanship for 1 (one) year from installation date. We will repair/replace, as we deem necessary, product that has been verified defective by a representative of our company. Any damage caused by either freight or wrongful installation are not covered under this warranty. This warranty does not cover normal wear, or force majeure - caused by fire, flood, earthquake, explosion, war, or acts of God. Seals and O-rings are not a warranty item. Warranty is null and void if a) item is disassembled, b) item is installed improperly, or c) warranty label has been tampered with or is removed from product.

TO BE FILLED OUT BY INSTALLER AT THE TIME OF INSTALLATION

Expiration Date:_____

Serial Number:_____

Model Number:_____

Mfg. Number:_____

NOTE: Return Warranty registration card must be returned for Warranty to honored.

Date of Installation:_____

Installation Company:_____

Address:_____

Telephone: ( )_____

Figure D-1

Phil-Tite Model M/F4X4 Riser Adaptor

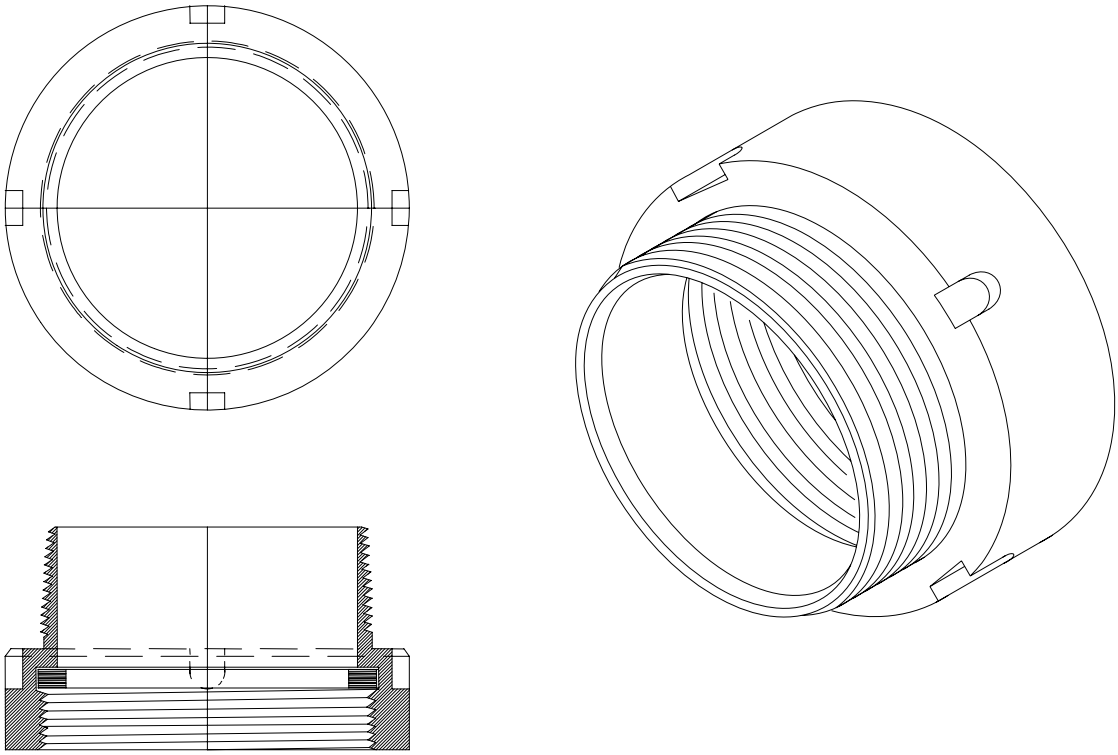

PHIL-TITE M/F4X4 RISER ADAPTOR

The Phil-Tite M/F4X4 Riser Adaptor is designed to provide a flat, true sealing surface for the installation of a gasket sealed, threaded component such as a Spill Container, Threaded Adaptor or storage tank gauging device.

INSTALLATION:

1. If installing a Spill Container on the M/F4X4, determine the final riser height required to meet finished grade and then subtract 1-3/4" to include the M/F4X4 Riser Adaptor. For all other components, determine the desired final riser height including the M/F4X4. Cut and thread the riser pipe to the appropriate height.

2. Apply a gasoline resistant, non-hardening thread sealant to the threads of the riser pipe ***only.*** By hand, thread the M/F4X4 onto the riser pipe.

3. Using an approved Installation Tool (Phil-Tite T-7043-1 Tool Kit), tighten the M/F4X4 onto the riser to a torque value between **150 and 175 Foot-Pounds**.

4. If installing a drop tube at the product fill riser, install the provided drop tube gasket under the drop tube flange and insert the tube into the tank.

5. Install a Spill Container, threaded adaptor or tank gauging equipment onto the Riser Adaptor ensuring that it is installed in conjunction with the ***Manufacturers Recommended Installation Instructions.***

WARNING! THE USE OF UNAPPROVED TOOLS OR IMPROPER INSTALLATION WILL VOID ANY AND ALL APPLIED WARRANTIES.

Figure E-1

Morrison Brothers Adaptor Dust Caps
323C-0100ACEVR (vapor adaptor dust cap)
305C-0100ACEVR (product adaptor dust cap)

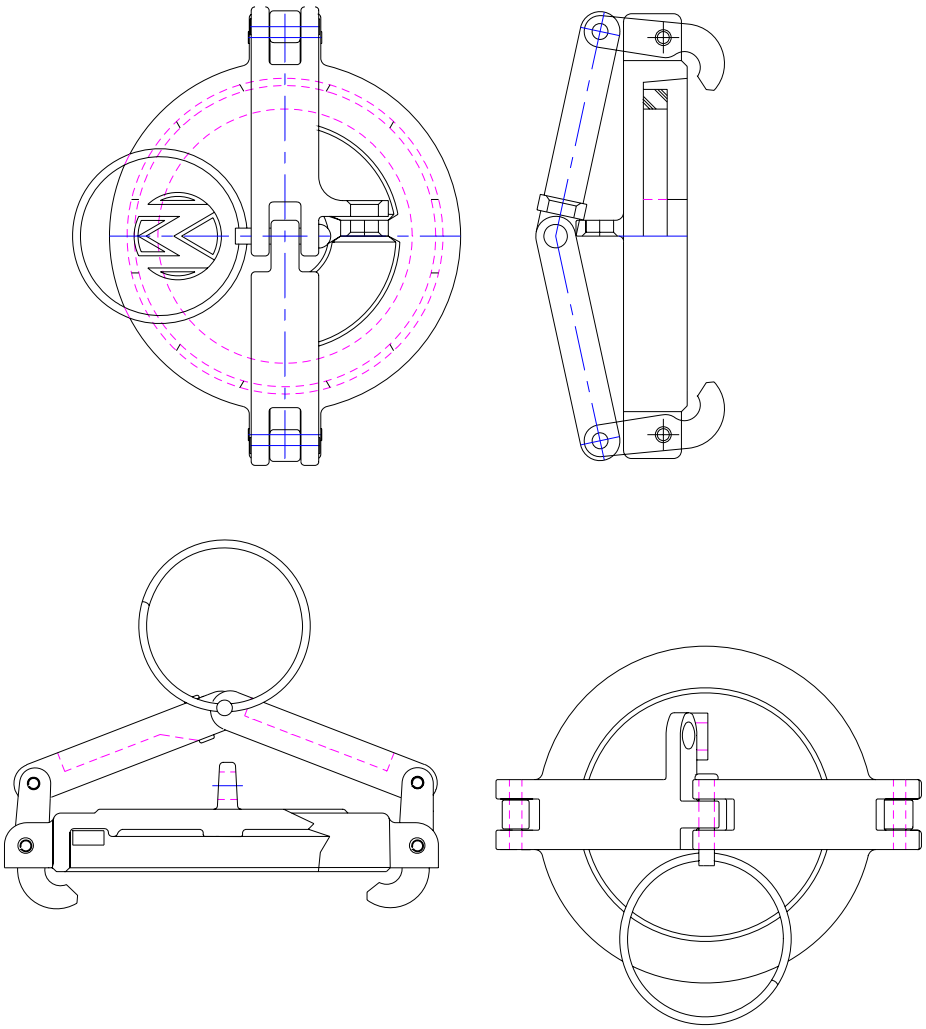

Morrison Bros. Co.
24th & Elm St.
Dubuque, IA 52001

WARRANTY CARD

All Morrison products are thoroughly tested before shipment and only material found to be defective in manufacture will be replaced. Claims must be made within one year from the date of installation, and Morrison Bros. Co. will not allow claims for labor or consequential damage resulting from purchase, installation, or misapplication of the product.

Expiration Date:

TO BE FILLED OUT BY
INSTALLER/MAINTENANCE PERSON

Name of Maintenance Service Company:

_____

Address:

_____

_____

_____

Date of Install:

Figure E-2

OPW 634TT-EVR and 1711T-EVR Dust Caps

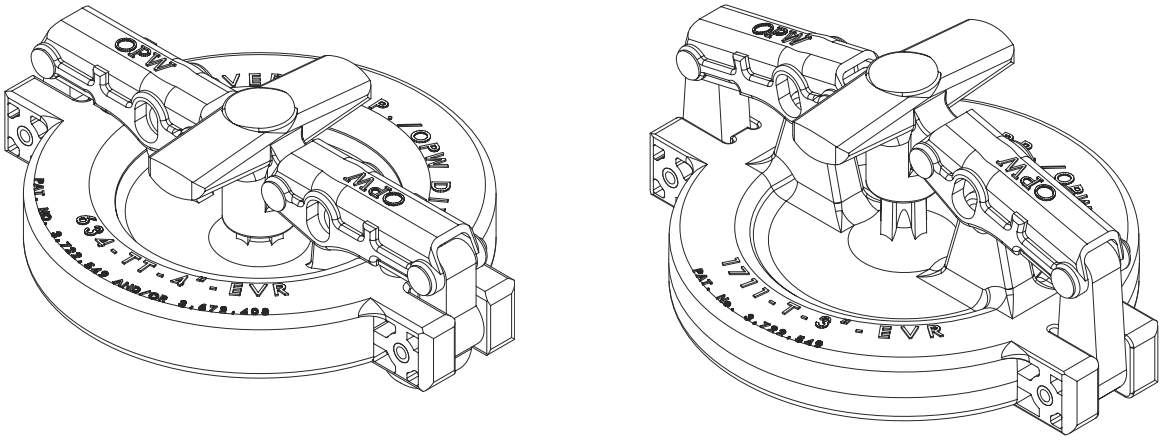

Operation and Maintenance:

Annually inspect seal for nicks, tears or deformations. If required replace with OPW P/N: H15005M for 634TT and H10886M for 1711T.

Standard Product Warranty

OPW warrants that products sold by it are free from defects in materials and workmanship for a period of one year from the date of manufacture by OPW (ECO products two years from date of manufacture.) Proof of purchase may be required. As the exclusive remedy under this limited warranty, OPW, will at its sole discretion, repair, replace, or issue credit for future orders for any product that may prove defective within the one year date of manufacture period (repairs, replacements, or credits may be subject to prorated warranty for remainder of the original warranty period, complete proper warranty claim documentation required.) This warranty shall not apply to any product that has been altered in any way, which has been repaired by any party other than a service representative authorized by OPW, or when failure is due to misuse, or improper installation or maintenance. OPW shall have no liability whatsoever for special, incidental or consequential damages to any party, and shall have no liability for the cost of labor, freight, excavation, clean up, downtime, removal, reinstallation, loss of profit, or any other cost or charges.

For any product certified to California 2001 standards, OPW warrants that product sold by it are free from defects in material and workmanship for a period of one year from date of manufacture or one year from date of registration of installation not to exceed 15 months from date of manufacture by OPW.

THIS WARRANTY IS IN LIEU OF ALL OTHER WARRANTIES, EXPRESS OR IMPLIED, AND SPECIFICALLY THE WARRANTIES OF MERCHANTABILITY AND FITNESS FOR A PARTICULAR PURPOSE. THERE ARE NO WARRANTIES, WHICH EXTEND BEYOND THE DESCRIPTION ON THE FACE HEREOF.

OPW
A DOVER COMPANY

P.O. Box 405003 * Cincinnati, Ohio 45240-5003
1-800-422-2525 Domestically
513-870-3315 Internationally
www.opw-fc.com

Figure F-1
Husky Model 4885 2-Inch Threaded Pressure/Vacuum Vent Valve

PRESSURE/VACUUM VENT MODEL 4885 INSTALLATION AND MAINTENANCE INSTRUCTIONS

INSTALLATION

The P/V Vent is designed to fit on top of a 2" vent pipe. Remove the P/V Vent from the carton and visually inspect for any shipping damage.

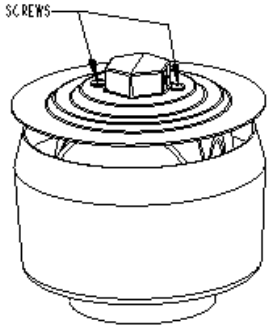

Model 4885 Thread-On P/V Vent

Apply fuel resistant pipe sealant to the threads on the 2" vent stack. Screw the P/V Vent onto the vent stack and tighten to a range of 20 to 50 ft-lbs with a suitable wrench. DO NOT OVER-TIGHTEN. Periodic maintenance is recommended (see below).

MAINTENANCE

Annually inspect the P/V Vent valve for foreign objects without removing the P/V Vent valve from the vent pipe by using the following procedure:

1. Remove the screws that hold the top cover on.
2. Remove any debris that might be sitting inside the lower cover.
3. Check the drain holes in the lower cover for blockage.
4. The two (2) screens should not be removed.
5. Reinstall the top cover and retaining screws.
6. Tighten the screws firmly.

NOTE: DO NOT ALTER OR COVER THE P/V VENT

TESTING CRITERIA

Leak rate: Pressure = 0.05 CFH at 2" WC,
Vacuum = 0.21 CFH at -4" WC.

Cracking Pressure: 2 ½" to 3 ½" WC, Vacuum = -6" to -10" WC.
Per ARB procedure TP-201.1E or the applicable ARB Executive Order.

HUSKY CORPORATION • 2325 HUSKY WAY • PACIFIC, MO 63069
www.husky.com **PHONE: 800-325-3558**

009041 – 6 9/19/03
(REVERSE SIDE IS 009063)

PRESSURE VACUUM VENT WARRANTY INFORMATION

Husky Corporation will, at its option, repair, replace, or credit the purchase price of any Husky manufactured Pressure Vacuum Vent which proves upon examination by Husky, to be defective in material and/or workmanship within EIGHTEEN (18) MONTHS from the date of shipment for any Husky Pressure Vacuum Vent, except as otherwise provided herein. For all other Husky manufactured product, see Husky Form No. PS2002-Term (4/15/02) at www. husky.com.

The warranty period on repaired or replacement product is only for the remainder of the warranty period. Buyer must return the products to Husky, transportation charges prepaid. This Warranty does not apply to equipment or parts which have been installed improperly, damaged by misuse, improper operation or maintenance, or which are altered or repaired in any way other than by Husky.

The Warranty provisions contained herein apply ONLY to original purchasers and subsequent commercial purchasers within the warranty period who use the equipment for commercial or industrial purposes. THERE ARE NO OTHER WARRANTIES OF MERCHANTABILITY, FITNESS FOR A PARTICULAR PURPOSE, OR OTHERWISE, AND ANY OTHER SUCH WARRANTIES ARE HEREBY SPECIFICALLY DISCLAIMED.

Husky assumes NO LIABILITY for labor charges or other costs incurred by Buyer incidental to the service, adjustment, repair, return, removal or replacement of products. HUSKY ASSUMES NO LIABILITY FOR ANY INCIDENTAL, CONSEQUENTIAL, OR OTHER DAMAGES UNDER ANY WARRANTY, EXPRESS OR IMPLIED, AND ALL SUCH LIABILTY IS HEREBY EXPRESSLY EXCLUDED.

Husky reserves the right to change or improve the design of any Husky fuel dispensing equipment without assuming any obligations to modify any fuel dispensing equipment previously manufactured.

HUSKY CORPORATION • 2325 HUSKY WAY • PACIFIC, MO 63069
www.husky.com **PHONE: 800-325-3558**

009063– 0 6/5/02

Figure G-1

Ever-Tite Tank Gauge Port Components

Ever-Tite #4097AGBR Adaptor with Hex Base

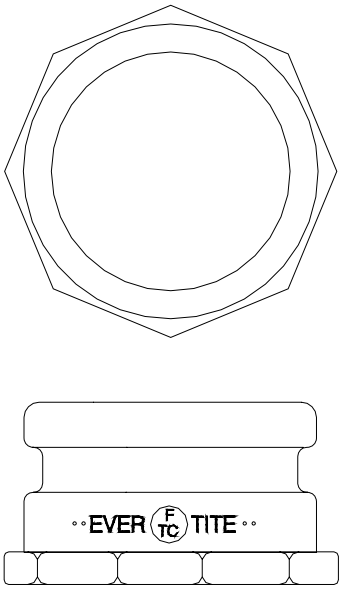

Ever-Tite #4097AGMBRNL Adaptor

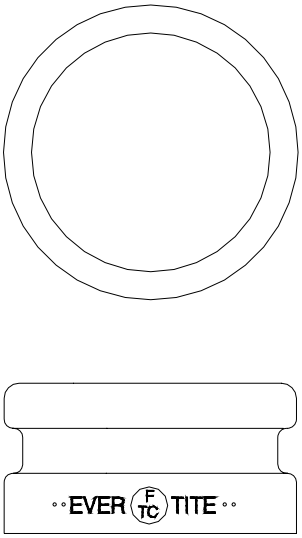

Ever-Tite #4097MBR Cap

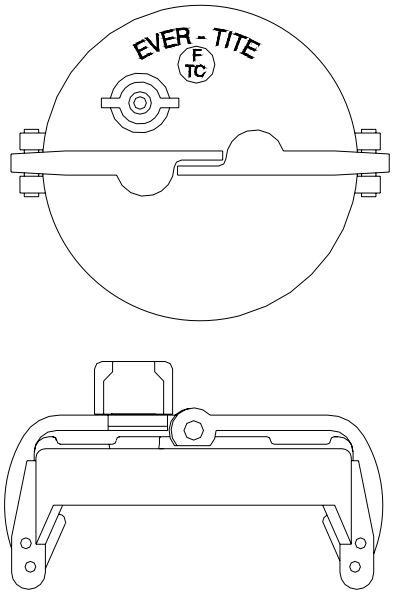

Installation Instructions

1. Thread by hand to avoid cross threading.

2. Tighten adaptor to 75 to 100 foot-pounds torque.

Warranty
The Company warrants its goods to be free from defects in material and workmanship as represented in our catalogs or applicable drawings and specifications agreed to by us at the time of acceptance of the order by Ever-Tite Coupling Products. Our obligation under this warranty shall be limited to repairing or replenishing any parts which shall, within one (1) year after shipment to the original purchaser, be demonstrated to be defective. This warranty is expressly in lieu of all other warranties, express or implied, including the warranties of merchantability and fitness. No person, firm or corporation is authorized to assume for us any other liability in connection with the sale of these goods.

Figure G-2

Veeder-Root P/N 312020-952 Tank Gauge Port Cap and Adaptor

Original Identification Method

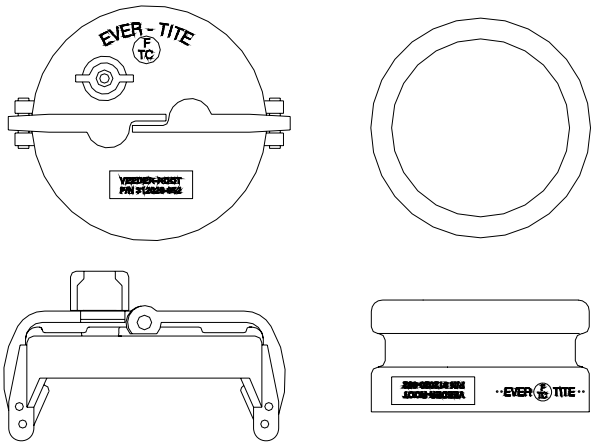

New Identification Method

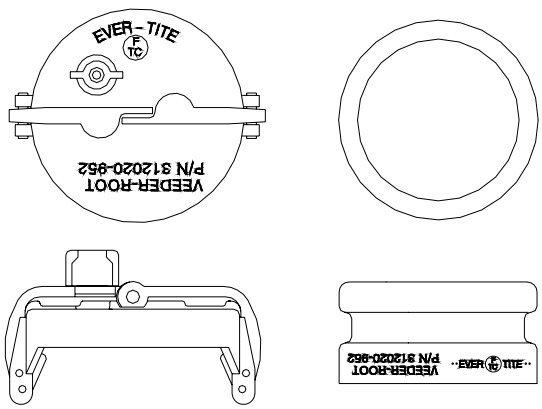

Installation Instructions

Install a CARB approved machined adaptor onto the riser. Apply a gasoline-resistant, non-hardening thread sealant to the threads of the riser adaptor only. Next screw the ring from the Veeder-Root kit (P/N 312020-952) onto the riser adaptor by hand until the gasket contacts the sealing surface. Then use a torque wrench attached to an appropriate strap wrench (K-D Specialty tools nylon strap oil filter wrench P/N 3149, or equivalent) and tighten the ring to 35 - 45 ft-lbs. Loosen the cord grip nut and push the cable through the cap and cord grip, then clamp the cap onto the ring.

Warranty

We warrant that this product will be free from defects in materials and workmanship for a period of 1 year from the date of installation or 24 months from the date of invoice, whichever occurs first. During the warranty period, we or our representative will repair or replace the product, if determined by us to be defective, at the location where the product is in use and at no charge to the purchaser.

We shall not be responsible for any expenses incurred by the user.

This warranty applies only when the product is installed in accordance with Veeder-Root's specifications, and a Warranty Registration and Checkout Form has been filed with Veeder-Root by an Authorized Veeder-Root Distributor. This warranty will not apply to any product which has been subjected to misuse, negligence or accident; or misapplied; or used in violation of product manuals, instructions or warnings; or modified or repaired by unauthorized persons; or improperly installed.

Figure G-3

Morrison Brothers Tank Gauge Port Components
305XPA & 305XPA1100AKEVR (cap and adaptor kit)
305 & 305-0200AAEVR (replacement adaptor)
305XP & 305XP-110ACEVR (replacement cap)

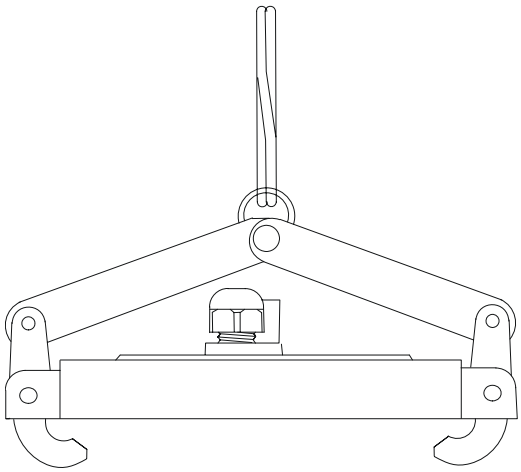

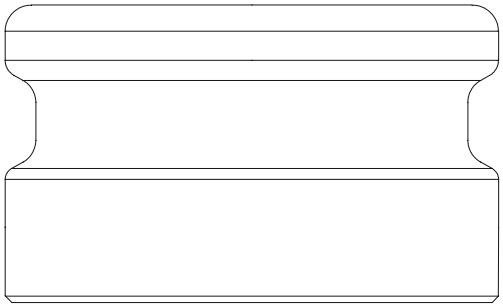

305XP Cap

Installation Instructions –

1. Apply a fuel resistant, non-hardening, anti-seize sealant (not adhesive) to cable connector threads. Follow manufacturer's instructions for installation of monitoring system.
2. Set cap on adapter
3. Push down on lever arms.

305 Adapter

Installation Instructions –

1. Apply a fuel resistant, non-hardening, anti-seize sealant (not adhesive) to body threads.
2. Thread body on to riser pipe. Torque to 23-26 ft.-lb.

Morrison Bros. Co.
24th & Elm St.
Dubuque, IA 52001

WARRANTY CARD

All Morrison products are thoroughly tested before shipment and only material found to be defective in manufacture will be replaced. Claims must be made within one year from the date of installation, and Morrison Bros. Co. will not allow claims for labor or consequential damage resulting from purchase, installation, or misapplication of the product.

Expiration Date: _____

Item No: _____

This card must be returned to manufacturer for warranty to be honored.

TO BE FILLED OUT BY
INSTALLER/MAINTENANCE PERSON

Name of Maintenance Service Company:
_____

Address:
_____

_____

Date of Install: _____

Name and Location of Install:
_____

_____

Figure H-1

Universal Model Number 37 Series Ball Float Vent Valve
And Model V421 Series Extractor Fitting

Installation Instruction for Model 37 Series Float Vent Valve and Model V421 Extractor Fitting

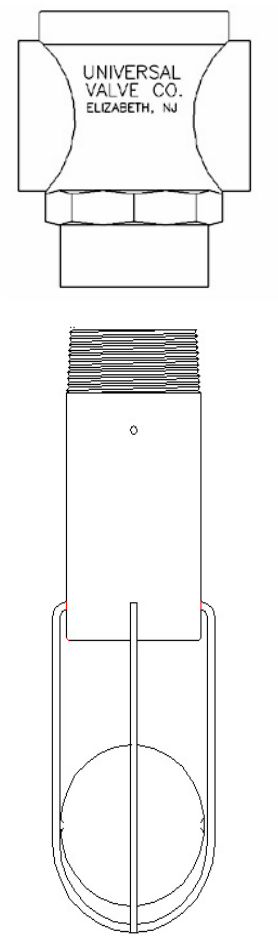

1. **Apply a non-hardening, gasoline resistant, pipe compound to the threads of Model 37 before installing the unit into the cage assembly of the Universal Model V421 Extractor Fitting. Tighten the Model 37 into the cage assembly to a torque of approximately 45 ft.-lbs.**

2. **Apply a non-hardening, gasoline resistant, pipe compound to the threads of the cage assembly to facilitate removal at a later date. Install the cage assembly into the Model V421 to a torque of approximately 45 ft-lbs. Use caution when installing the cage assembly into the Model V421. Do not over tighten. Make sure the ball moves freely.**

3. **Apply a non-hardening, gasoline resistant, pipe compound to the threads of the Extractor Fitting and hand tighten the assembly into the tank bung. Tighten the Extractor Assembly into the tank to a torque of approximately 150 ft.-lbs.**

<u>Maintenance</u>

Every 3 following startup, inspect the Model 37 to ensure proper operation. Check to ensure that the ball moves freely within the cage and that the bleed hole allows free airflow.

WARNING! This product is only to be used on gravity drop systems. DO NOT use this product if the tank is being filled by means of a pump.

Universal Valve Co., Inc.
478 Schiller Street
Elizabeth, NJ 07206
Phone: (800) 223 –0742
Fax: (908) 351-0369

©Copyright 2002 Universal Valve Co., Inc.

Figure H-2

OPW Model 53VML / 30MV Series Ball Float Vent Valves and 233 Series Extractor

OPW Installation and Maintenance Instructions

53VML / 30MV SERIES BALL FLOATS AND 233 SERIES EXTRACTOR ASSEMBLIES

IMPORTANT: Please read these warnings and use the assembly instructions completely and carefully before starting. Failure to do so may cause product failure, or result in environmental contamination due to liquid leakage into the soil, creating hazardous spill conditions.

IMPORTANT: Check to make sure the unit is intact and undamaged and all parts have been supplied. Never substitute parts for those supplied. Doing so may cause product failure and void warranty.

WARNING-DANGER: Using electrically operated equipment near gasoline or gasoline vapors may resultin a fire or explosion, causing personal injury and property damage. Be sure that the working area is free from such hazards, and always use proper precautions.
NOTE: At all times when product is in the storage tank keep the riser pipe capped, so the vapors cannot escape into the environment.

Notice: OPW products must be used in compliance with applicable federal, state, and local laws and regulations. Product selection should be based on physical specifications and limitations and compatibility with the environment and material to be handled. All illustrations and specifications in this literature are based on the latest production information available at the time of publication. Prices, materials, and specification are subject to change at any time, and models may be discontinued at any time, in either case, without notice or obligation.

WARNING: OPW Overfill Warning Systems should only be used on submerged pumping systems, and not with suction pump systems. OPW Overfill Warning Systems should only be used on gravity drop systems. DO NOT use where Pump Off Unloading is used

IMPORTANT: Installing the incorrect length OPW 53VML or 30MV Ball Float Vent Valve for your specific application may result in delivery flow restriction at tank levels exceeding requirements established by the U.S. EPA. Always consult the appropriate tank charts and determine the specifics of your tank installation to determine the appropriate length OPW 53VML or 30MV to be installed. The illustration and instructions on the back of this sheet are intended to serve as a guide in this determination.

Field Installation Instructions

1. Apply a non-hardening, gasoline resistant pipe compound on the ball float nipple threads. Install the extractor cage-assembly onto the ball float nipple. Torques for, 3"NPT thread, 125 ft-lbs min. to 200 ft-lbs max, 2"NPT thread, 100 ft-lbs min. to 150 ft-lbs max. **DO NOT USE TEFLON TAPE**
2. Thread the 233 Series OPW Extractor Fitting into the tank bung fitting. Torque for, 4"NPT thread, 125" ft-lbs min. to 250 ft-lbs max. Thread the Ball Float and cage assembly into the 233 extractor fitting using the OPW 89 Extractor Wrench. Torque for, 3 3/ 4-8 thread, 75 ft-lbs min. to 150 ft-lbs max.
3. Make sure Ball Float moves freely, full stroke, without binding.
4. **Preventative Maintenance** - Every three years, remove and inspect the valve for damage, contamination, corrosion, freedom of movement of the ball float, and check the bleeder orifice for proper airflow. Replace if damaged or corroded.

Important: Leave these instructions with Station Operator.

Standard Product Warranty: OPW warrants that products sold by it are free from defects in materials and workmanship for a period of one year from the date of manufacture by OPW (ECO products two years from date of manufacture.) Proof of purchase may be required. As the exclusive remedy under this limited warranty, OPW, will at its sole discretion, repair, replace, or issue credit for future orders for any product that may prove defective within the one year date of manufacture period (repairs, replacements, or credits may be subject to prorated warranty for remainder of the original warranty period, complete proper warranty claim documentation required.) This warranty shall not apply to any product that has been altered in any way, which has been repaired by any party other than a service representative authorized by OPW, or when failure is due to misuse, or improper installation or maintenance. OPW shall have no liability whatsoever for special, incidental or consequential damages to any party, and shall have no liability for the cost of labor, freight, excavation, clean up, downtime, removal, reinstallation, loss of profit, or any other cost or charges.

For any product certified to California 2001 standards, OPW warrants that product sold by it are free from defects in material and workmanship for a period of one year from date of manufacture or one year from date of registration of installation not to exceed 15 months from date of manufacture by OPW.

THIS WARRANTY IS IN LIEU OF ALL OTHER WARRANTIES, EXPRESS OR IMPLIED, AND SPECIFICALLY THE WARRANTIES OF MERCHANTABILITY AND FITNESS FOR A PARTICULAR PURPOSE. THERE ARE NO WARRANTIES, WHICH EXTEND BEYOND THE DESCRIPTION ON THE FACE HEREOF.

IMPORTANT: The figures in this installation and maintenance instruction may contain vapor recovery equipment (including model numbers) that is not certified by the California Air Resources Board (CARB) for a specific Phase I Vapor Recovery System. Please refer to Exhibit 1 of the appropriate CARB Phase I Executive Order for a list of certified Phase I Vapor Recovery System Equipment.

Specifying OPW 53VML AND 30MV Ball Float Vent Valves

IMPORTANT: Dimensions are for installations without Overfill Prevention Drop Tubes. See Drop Tube installation for reference on those installations.

Specifying the Proper Length 53VML Series Ball Float

Step 1: Determine Dimension "X": Consult the tank chart (provided by the tank manufacturer) to determine the distance that corresponds to 10% of the total tank capacity

Step 2: Determine Dimension "Y": Measure the dimension from the inside top of the tank to the top of the 4" threaded tank "bung" fitting.

Step 3: Add measurements "X" and "Y". Then subtract 1/4"and round up to the nearest length ball float.

Specifying the Proper Length 30MV Series Ball Float

Step 1: Determine Dimension "X": Consult the tank chart (provided by the tank manufacturer) to determine the distance that corresponds to 308 gallons.

Step 2: Determine Dimension "Y": Measure the dimension from the inside top of the tank to the top of the 4" threaded tank "bung" fitting.

Step 3: Add measurements "X" and "Y". Then subtract 1/4 " and round up to the nearest length ball float.

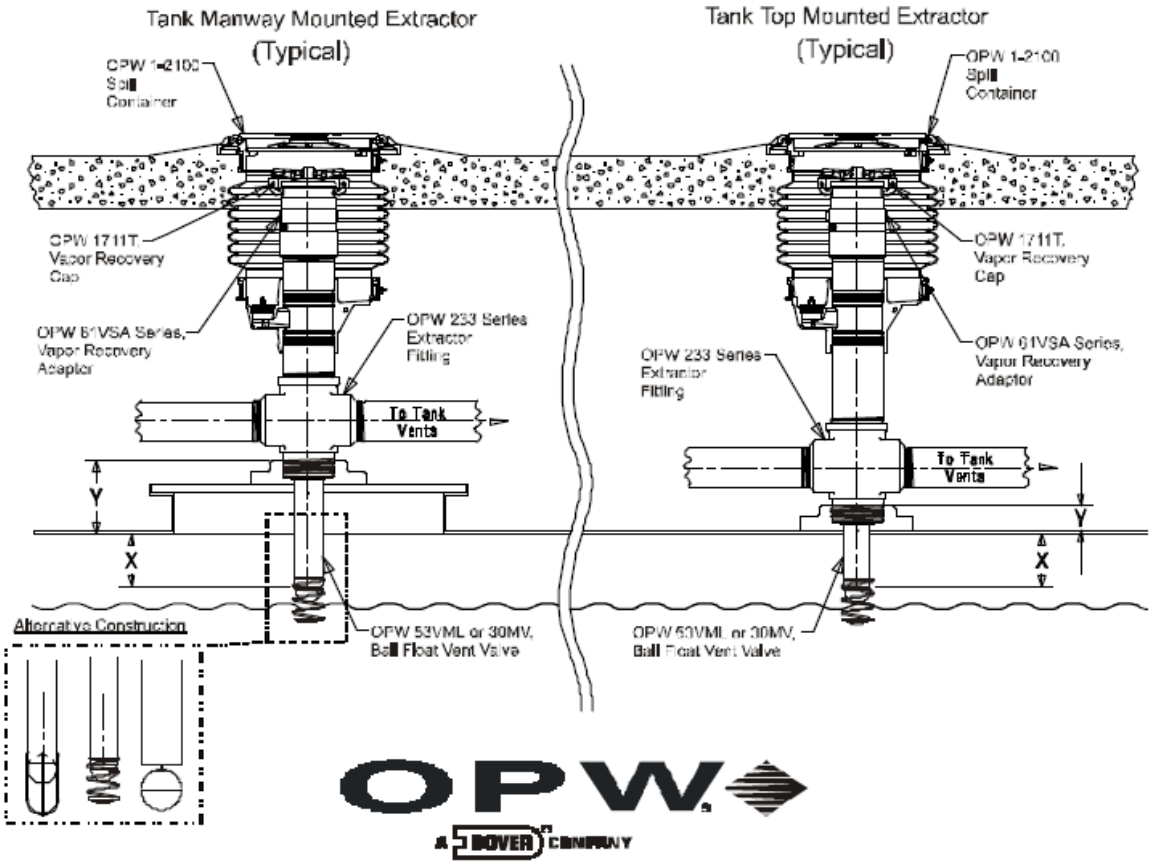

P.O. Box 405003 * Cincinnati, Ohio 45240-5003
1-800-422-2525 Domestically
513-870-3315 Internationally
www.opw-fc.com

Copyright, 2003- OPW Fueling Components Inc., Cincinnati, OH
Printed in U.S.A. p/n H14111PA (9/03)

FIGURE I-1
Phil-Tite Phase I EVR
OPW 61T Drop Tube

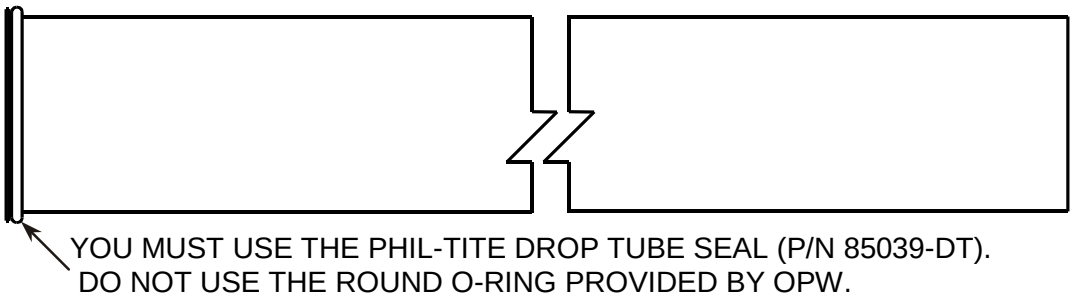

Installation Instructions

1. Cut the tube to a length so that it is not more than 6” from the bottom of the tank or per local codes or requirements. Saw off the excess tube at a 45-degree angle and file off any sharp burrs.

Operation and Maintenance:

Annually: Test the drop tube seal with ARB procedure TP-201.1C or TP-201.1D. If the drop tube seal passes testing, no further maintenance is required. If the drop tube seal fails testing, replace the drop tube seal with Phil-Tite Drop Tube Seal (P/N 85039-DT) for 4” Tubes. Re-test the drop tube seal with ARB procedure TP-201.1C or TP-201.1D.

Standard Product Warranty

OPW warrants that products sold by it are free from defects in materials and workmanship for a period of one year from the date of manufacture by OPW (ECO products two years from date of manufacture.) Proof of purchase may be required. As the exclusive remedy under this limited warranty, OPW, will at its sole discretion, repair, replace, or issue credit for future orders for any product that may prove defective within the one year date of manufacture period (repairs, replacements, or credits may be subject to prorated warranty for remainder of the original warranty period, complete proper warranty claim documentation required.) This warranty shall not apply to any product that has been altered in any way, which has been repaired by any party other than a service representative authorized by OPW, or when failure is due to misuse, or improper installation or maintenance. OPW shall have no liability whatsoever for special, incidental or consequential damages to any party, and shall have no liability for the cost of labor, freight, excavation, clean up, downtime, removal, reinstallation, loss of profit, or any other cost or charges.

For any product certified to California 2001 standards, OPW warrants that product sold by it are free from defects in material and workmanship for a period of one year from date of manufacture or one year from date of registration of installation not to exceed 15 months from date of manufacture by OPW.

THIS WARRANTY IS IN LIEU OF ALL OTHER WARRANTIES, EXPRESS OR IMPLIED, AND SPECIFICALLY THE WARRANTIES OF MERCHANTABILITY AND FITNESS FOR A PARTICULAR PURPOSE. THERE ARE NO WARRANTIES, WHICH EXTEND BEYOND THE DESCRIPTION ON THE FACE HEREOF.

OPW
A DOVER COMPANY

Figure I-2

PHIL-TITE ENTERPRISES

June 2005

Installation, Operation & Maintenance

FOR

PHILTITE 61SO - PT - DROP TUBE with MECHANICAL OVERFILL PREVENTION VALVE

IMPORTANT: Please read these assembly and installation instructions completely and carefully before starting.

THESE INSTRUCTIONS ARE VERY DIFFERENT FROM OTHER MANUFACTURERS INSTRUCTIONS AND REQUIRE THE UPPER DROP TUBE SECTION TO BE FLARED

GENERAL INSTRUCTIONS

The Phil-Tite 61SO-PT Overfill Prevention Valve and drop tube is designed for tight fill connections, gravity drop applications only, and to provide positive shut-off of product delivery before an overfill condition occurs without intervention from the transport driver (per EPA and State requirements). The valve features a sealed float pivot and a threaded lower tube connection with a maximum vapor leak rate of 0.17CFH @ 2” H20 or less in accordance with CARB TP-201.1C or D. The 61SO-PT Overfill Prevention Valve and Drop Tube is installed

below the spill collector in the UST in place of a standard straight drop tube.

During a delivery the main 61SO-PT valve closes when the liquid level is at 95% from the top of the tank. A small bypass valve remains open to allow the delivery hose to drain at 3-5 gallons per minute. If the delivery truck valve is not closed after initial shut-off (95%), and the liquid level reaches 98% the bypass valve will close and will restrict all fuel deliveries.

The 61SO-PT models are designed to be installed with a PHIL-TITE Spill Container, and M/F 4 X 4 riser adaptor using Phil-Tite installation instructions, work sheet, torque adapters and Flaring Tool (T-6100-FT).

IMPORTANT

Read these assembly and installation instructions completely and carefully prior to starting. Check to make sure you have the special seal (85039-DT) and a package of JB KWIK. Do not use any substitutes for these items. The use of substitute parts may cause product failure.

Failure to follow these instructions may cause improper product operation or premature failures which may permit storage tank overfill. An overfilled storage tank may create hazardous conditions and/or environmental contamination.

CAUTION

Do not remove elastic band from around the float until instructed to do so. Damage to the valve assembly may result.

WARNING

Failure to properly connect delivery hose and elbow, and/or disconnecting a liquid filled delivery hose or elbow will result in a hazardous spill, which may result in personal injury, property damage, fire, explosion, and water and soil pollution.

- Make sure all connections, including the hose and elbow connections between the storage tank and transport are securely coupled. Prefer the use of rotatable Fill and Vapor adaptors.
- Make sure the lip seal and/or all gaskets in the delivery elbows and adaptors are properly in place to prevent spills.
- Do not make a delivery using damaged or missing parts, which prevent tight connections.

Normal Operation of the over-fill valve: A Hose ”Kick” and reduced flow signal that the tank has reached 95% full. Fuel flow is reduce to 5gpm through a bypass valve. Close the transport delivery valve(s) and drain hose into tank before disconnecting any hose fitting. If delivery is not stopped and the liquid rises above 98% of tank capacity the bypass valve will close completely shutting off all flow into the UST.

Overfilled Tank: The inability to drain the hose or failure of the hose to drain after closing the delivery valve(s) signals an overfilled tank. Do Not Disconnect any delivery hose fittings until the liquid level in the tank has been lowered to allow the hose to drain into the tank. Attention: In the event you are splashed with fuel, remove all wetted clothing immediately. Do not go into an enclosed area and stay away from any and all ignition sources.

IMPORTANT

Determine if the underground storage tank is equipped with a ball float vent valve. In all systems, the shut-off point of the 61SO - PT must be reached before the ball float reduces flow to ensure proper overfill valve operation. See State Water Resources Control Board Local Guidance Letter-150-1.

TOOLS NEEDED FOR INSTALLATION AND ASSEMBLY: See Photo below.

1. ¾”X20’ Tape measure
2. High-Tension Hacksaw, with fine tooth (24-32 teeth/inch) blade or equivalent.
3. Fine teeth half round file
4. Phil-Tite Flaring Tool Assy. (T-6100-FT)
5. ¼” Ratchet with 3” extension
6. 3/16”X1/4” & 5/16”X1/4” Hex with socket adaptor
7. Small common screwdriver
8. Fine Tip Marking pen or pencil

WARNING

Using electrically operated equipment near gasoline or gasoline vapors may result in fire or explosion, causing personal injury and property damage. Check to assure the working area is free from such hazards, and always use proper precautions.

61SO - PT – Drop Tube Preassemble Instructions

Tank Riser
Install the previously measured, cut and threaded fill riser into the tank fill opening using the spill collector installation instructions. Apply pipe dope to the riser NPT male threads. Pipe dope is to be non-hardening, gasoline resistant pipe thread seal compound. Correctly torque the tank riser to ensure a vapor and liquid tight fit.

Install the M/F 4X4 riser adapter using the M/F 4X4 Installation Instructions onto the top of the 4” riser and correctly torque the adapter using the Phil-Tite special tool adaptor (T-7102 Orange).

IMPORTANT

Dry Fit the Fill Spill Container Assembly

Install the fill spill container onto the M/F 4”X4” riser adaptor that is installed onto the 4” riser to tank top. Measure the distance from the top of the spill collector to finish grade (approximately 4 ½”). This is to verify the 4” riser to the tank

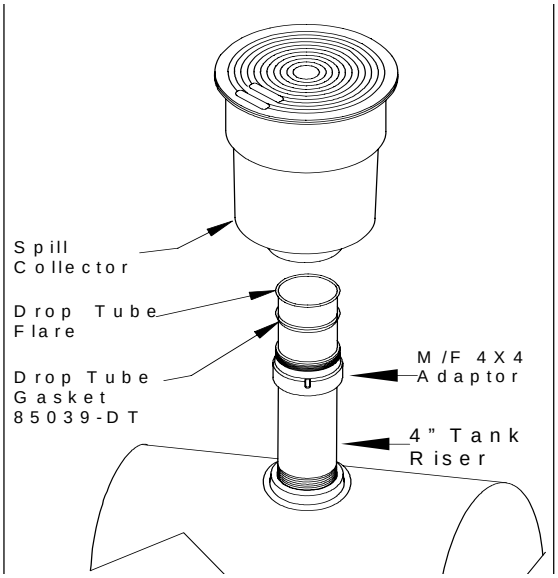

has been cut to the appropriate length. (See diagram this page.)

A change in the fill riser length after cutting the drop tube could affect the operation of the mechanical overfill valve.

To determine the correct lengths to cut the upper and lower sections of the drop tube for installation; use the work sheet that follows.

Phil-Tite Enterprises

Date: _____

61SO – PT – (X) Mechanical Overfill Prevention Valve and Drop Tube

Measurement Work Sheet to Determine the Drop Tube Lengths

Site Location: *(name)* _____ Installing Contractor: *(name)* _____

Address _____ Address _____

City/State_____City/State_____

Contact/Phone _____Contact/Phone _____

Tank Number:_____ Product:_____ Tank Type: _____

Tank Manufacture:_____ Tank Capacity _____
(From Mfg. tank chart)

Tank Diameter *(from Mfg. tank chart)* _____inches

<u>STEP 1</u> Determine the distance in inches the 61SO-PT- XX mechanical overfill valve must be set below the top of the tank for it to close when the tank reaches 95% capacity.

Using the manufactures tank chart, find the tank total capacity in gallons. Multiply this number by 95%.

Total tank capacity in gallons ( ) **X** (0.95) = _____ gallons

Using the manufacturer tank chart, convert the 95% capacity in gallons to inches = _____inches

Use TABLE 1 to calculate the correct distance.

<u>TABLE 1</u>

Primary Tank Diameter in (inches) …….. ( )

Subtract the 95% Liquid level converted to <u>inches</u> ……... -- (_____)

This results is the distance in inches below the top of the tank to the tank's 95% liquid level in inches …….....… = ( )

Subtract 2" inches (*from the above figure)* ……..... _____ — 2.00

This is "the distance" that the 61SO-PT overfill valve must be set below the top of the tank for the overfill valve to operate correctly when the tank reaches 95% capacity: ..... **= ( ) ***

*** Transfer this number to <u>Step 3</u> and <u>Table 2</u> for determining the <u>UPPER DROP TUBE LENGTH</u>.**

STEP 2 Determine the total height of the Fill *(product)* riser height with the M/F 4X4 riser adapter installed. See **Figure 1**, Measurement **"A"** *(Note: Both the fill riser and M/F 4X4 adapter must be installed and correctly torqued.)*

To determine the fill riser height, ***(M/F 4X4 riser adapter must be installed)*** take a tape measure and measure from **inside** the installed riser, *(hook the tape on the end of the riser or on the inside top of tank)* and measure from the bottom end of the riser to the top of the M/F 4X4 threaded adapter installed on top of the riser.
This is measurement **"A"** (_____) inches

STEP 2a To determine the total drop tube length, take the tape measure and measure from inside the riser from the bottom of the tank to the top of the M/F 4X4 riser adapter.

This is Measurement **"B"**(_____) inches ***(See Figure 1)***

STEP 3 Determining the **Upper Drop Tube Length** above the mechanical overfill prevention valve.

Use the final results in inches determined in Step 1

(_____) and **ADD** it to measurement **"A"**

from Step 2 (_____) **See Table 2**.

TABLE 2	
The final results from **Step 1**	(_____)
Measurement **"A" Step 2** ADD **+**	(_____)
UPPER DROP TUBE LENGTH	**= (_____)**

This is the exact length the top section of the aluminum drop tube should be above the mechanical overfill prevention valve for this tank installation.

NOTE: If this UST has a manway and the fill riser is installed in the top of the manway you must add the height of the manway to your riser length "A" for the over fill valve to be set the correct distance below the top of the tank.

See the Flaring Tool instructions for cutting and flaring the drop tube.

Note: To determine if an 8' foot drop tube can be used, take the Upper Drop Tube Length, and ADD 102". If this figure is greater than your Total Drop Tube Length, you can use an **8'** foot drop tube assembly.

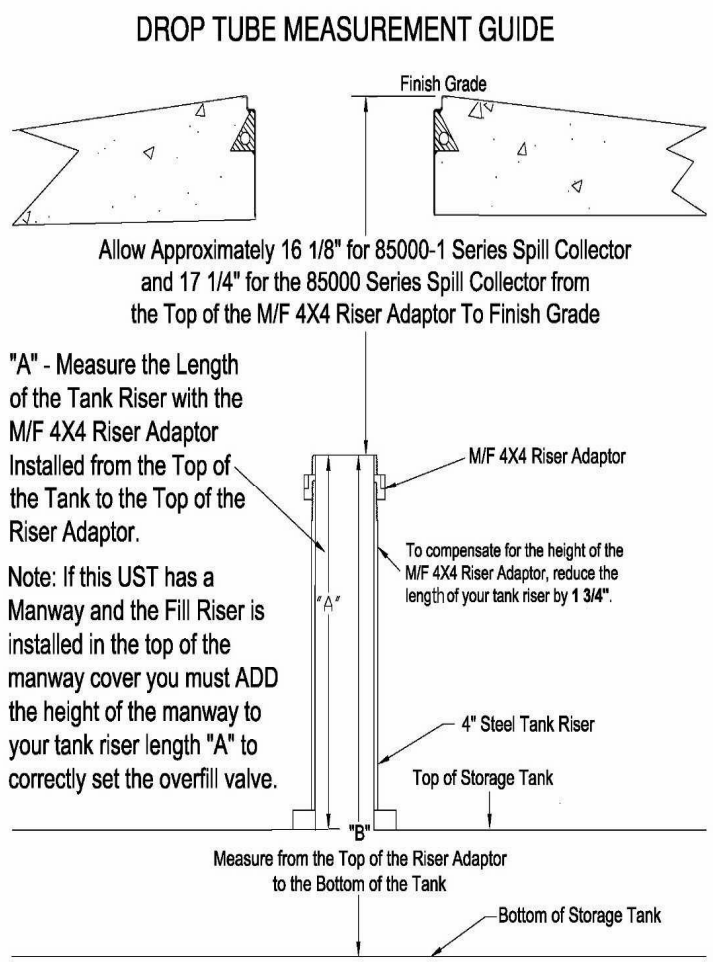

Figure 1

Step 4 Determining the total length of the drop tube. After flaring the upper drop tube section take the results of measurement **"B"** in **Step 2a (_____)**, and subtract 6 or less inches = (_____). Starting at the flare end (upper section) measure the entire length of the drop tube from the top down to the bottom and mark this measurement near the bottom portion of the drop tube. This will be your cut line for the bottom portion of the drop tube. ***See Table 3***

TABLE 3	
Measurement **"B"** from **Step 2a**	( )
Less 6" or local regulatory amount **--**	(_____)
TOTAL DROP TUBE LENGTH	**= ( )**

*Hint: Use 5 7/8" inches in lieu of 6" to ensure you do not Exceed **6"**. To make a perfect straight cut follow the Flaring tool instructions using the flaring tool cutter to make this cut. Place the marked cut line right on the cutting blade and make your cut.*

STEP 5: MARKING FINAL CUT MARKS

Upper Drop Tube Length

Mark the upper tube length with the dimension found in Step 3 Table 2 from the Drop Tube work sheet. Measure the upper section of the drop tube with a tape measure from where it connects to the mechanical over-fill valve to the dimension from Table 2 "Upper Drop Tube Length". Mark the drop tube using a black fine point marker (Sharpie) or pencil. This will be the length of the top section of the drop tube after flaring. See Step 5 Photos below.

Rough Cut Length

Measure 2" to 2 1/2" further from the Upper Drop Tube Length and mark the drop tube using a black fine point marker (Sharpie). This will be your rough cut mark. See Step 5, Photo 2.

STEP 5 Photos – Marking the Upper Drop Tube length and the rough cut mark

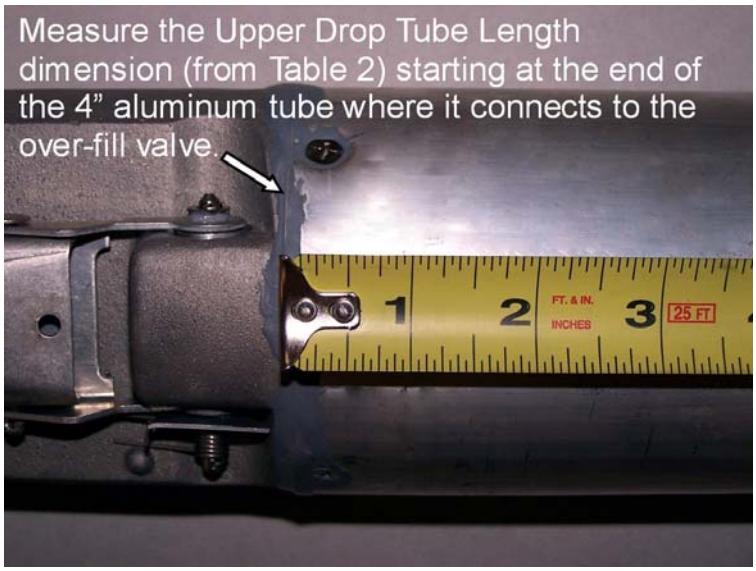

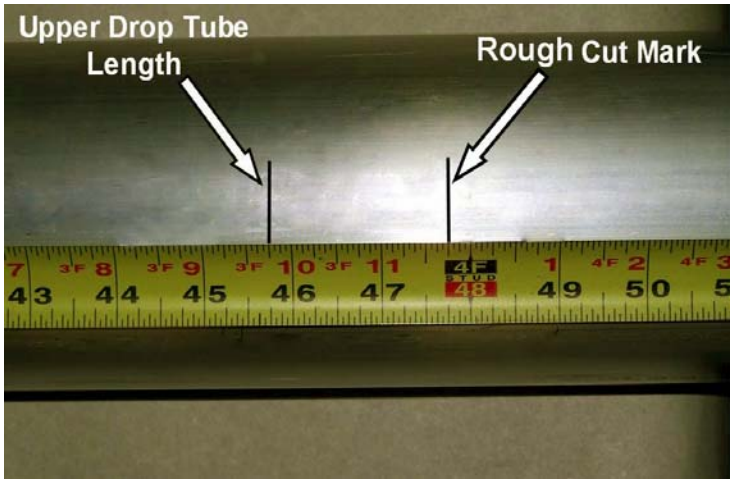

STEP 6: REMOVE EXCESS UPPER DROP TUBE – Rough Cut

Using a Hack Saw or SawsAll, saw through the Upper drop tube on the rough cut mark. This cut does not have to be straight . See Step 6 Photos.

CAUTION -DO NOT use a pipe or tubing cutter to cut the upper drop tube, this may damage the tube, causing it to be out of round.

STEP 6: Photo – Performing the rough cut.

STEP 7: INSTALL THE DRIVE RING

Position the Drive Ring with the alignment markings facing forward on the upper drop tube length mark, marked in Step 5. There should be approximately 2" inches of excess upper drop tube beyond the Drive Ring. See 2 next photos.

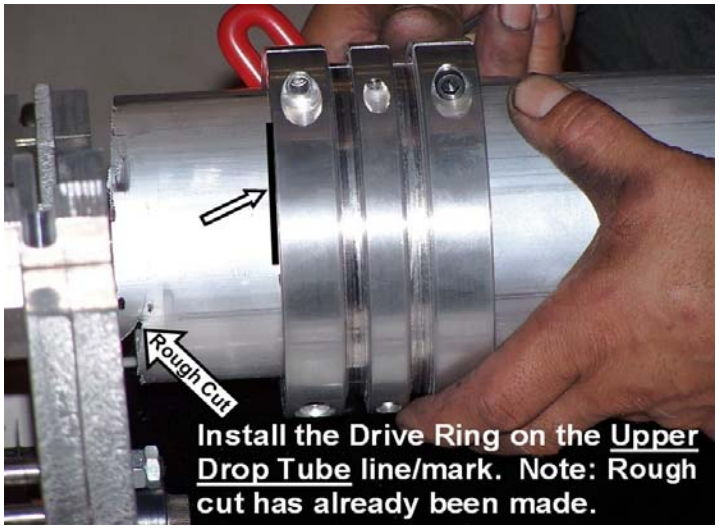

STEP 7 Cont.

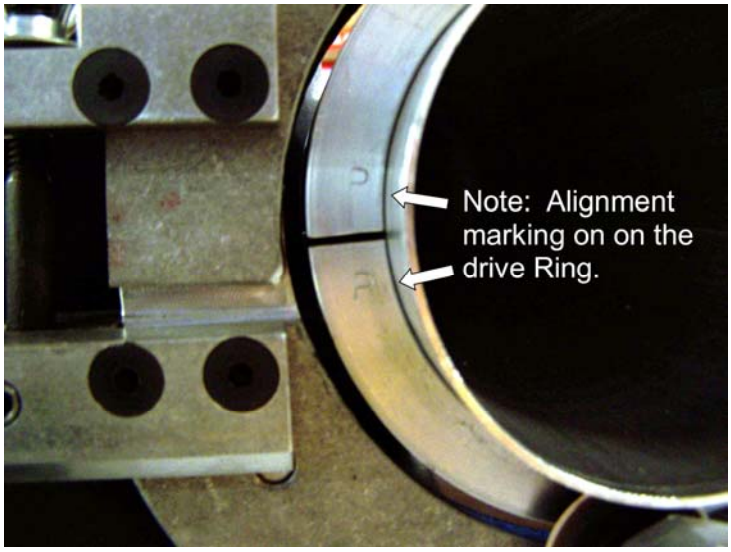

STEP 8: TIGHTEN THE DRIVE RING

Alternately Tighten the Drive Ring **4** Hex Screws. Check that the drive ring is still on the mark made for the drop tube Upper Drop Tube Length found in Step 3. See photo below:

STEP 9: POSITION THE DRIVE RING IN THE FLARING TOOL

Position the Upper Drop Tube with the Drive Ring into the Flaring Tool. See Photo Below:

STEP 10: SECURING THE DRIVE RING IN THE FLARING TOOL

Use the wing nut to tighten the Drive Wheel into the drive ring groove just enough to create a light tension between the drive wheel and drive ring (**do not over tighten**). See Photo below:

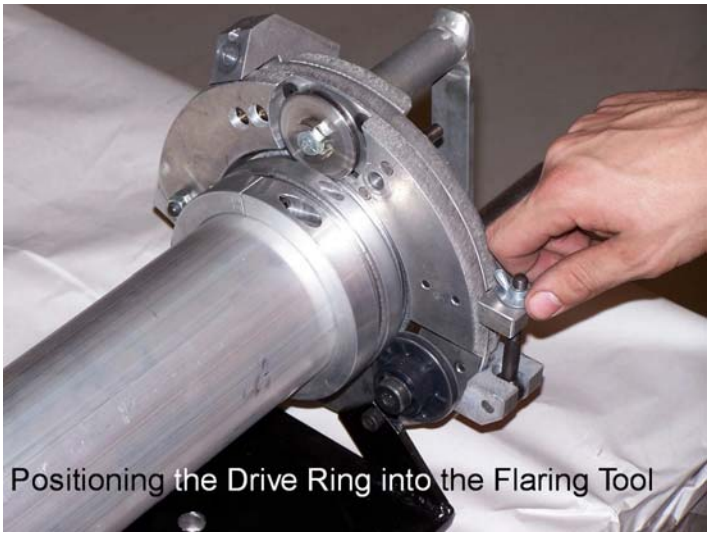

STEP 11: PERFORMING the PRECISION CUT

Apply light hand pressure on the cutter handle and rotate the drop tube to cut the proper dimension. **Do not apply excessive pressure.** Should the drop tube not turn, tighten the thumb-screw tension until the handle drives the drive ring.

After the drop tube is cut there should be 1/4" of an inch of material remaining. See Photo below.

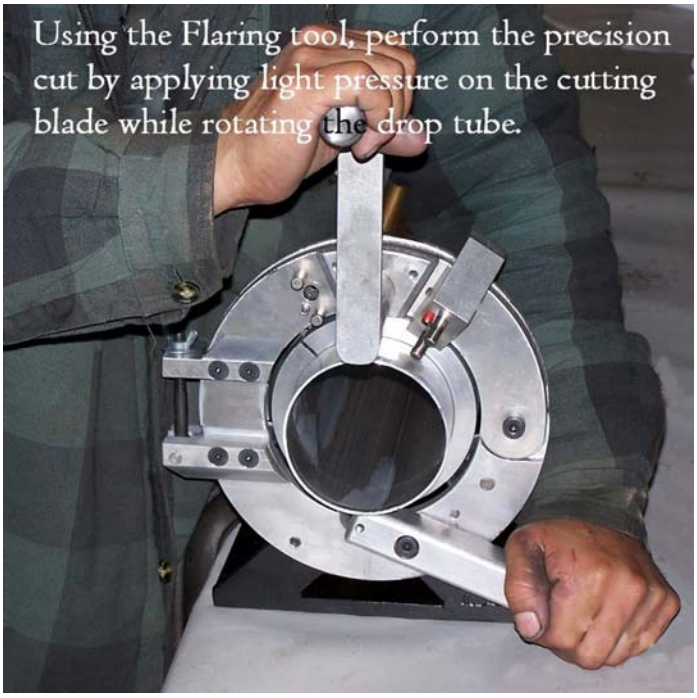

You are now ready to start performing the flare.

STEP 12: FIRST FLARING ROLLER POSITION
The first position for the flaring roller is in the 0 – 45 degrees position. Use the long hex screw to connect the flaring roller to the flaring tool. See Photos Below for correct position.

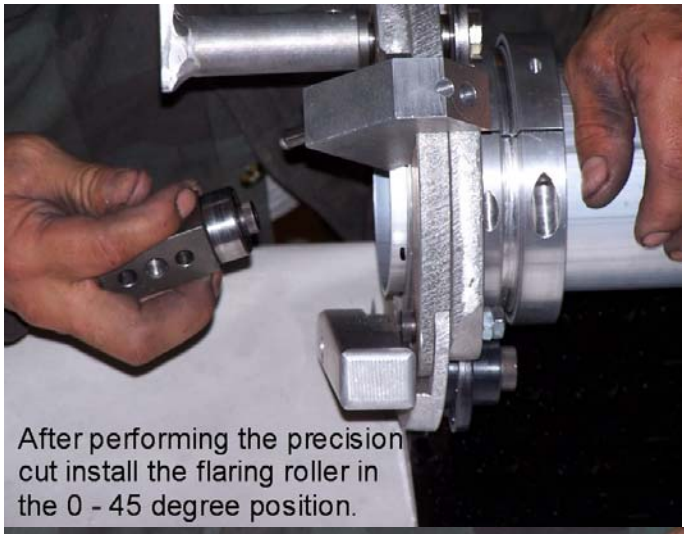

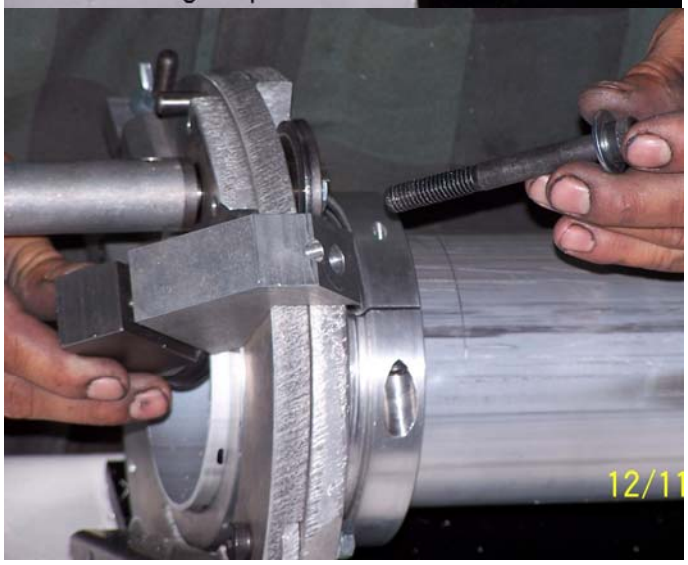

STEP 13: PERFORMING O – 45 DEGREE FLARE
Turn the long hex screw until it is snug. While turning the Flaring Tool Handle, slowly tighten the long hex screw applying continual pressure until a 45 degree flare is made. The hex screw will bottom out and become tight. When this happens stop turning the long hex screw, the first half of the flare is complete. Remove the long hex screw and Flaring roller.

STEP 14: 45 – 90 DEGREE FLARING POSITION
Install the flaring roller in the 45 – 90 degree position using the short hex screw. See photo below.

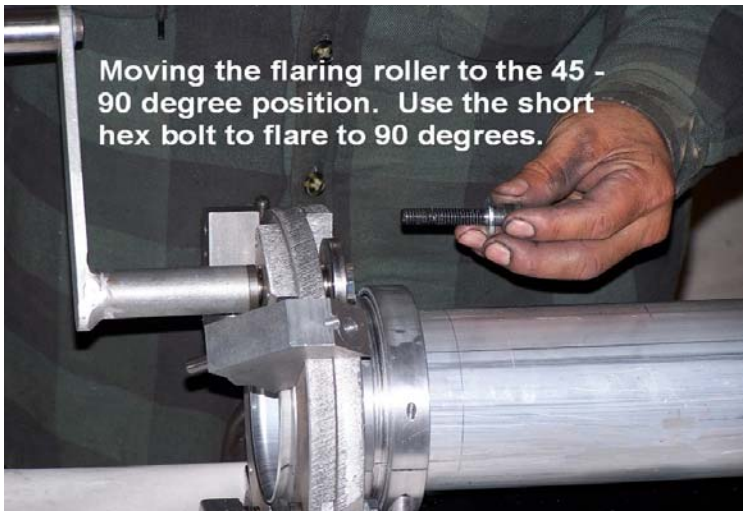

STEP 15: PERFORMING - 45 – 90 DEGREE FLARE
Turn the short hex screw until it is snug. While turning the Flaring Tool Handle, slowly tighten the short hex screw applying continual pressure until the 90 degree flare is completed. The short hex screw will bottom out and become tight. When this happens, stop turning the short hex screw, the 90 degree flare is complete. Remove the short hex screw and Flaring roller. See photo below.

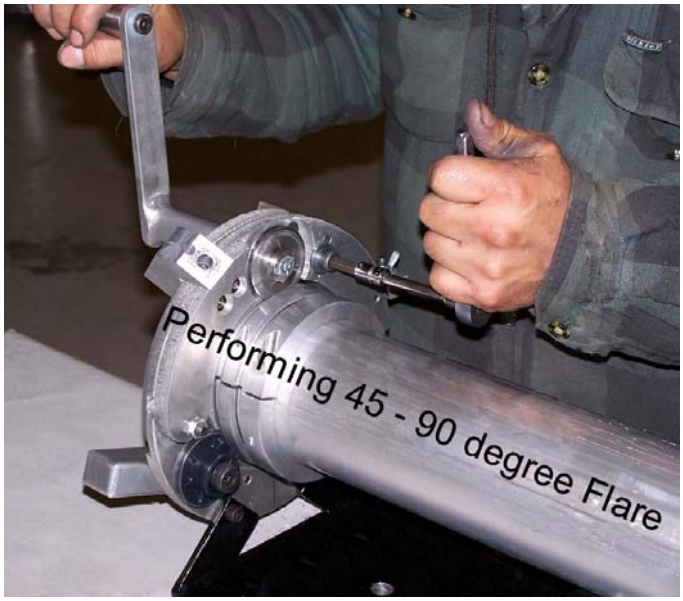

STEP 16: FLARE COMPLETED

After the flaring procedure is completed, there should be smooth, flat 90-degree flare. Remove the flaring roller from the flare tool and the drive ring from the drop tube. See Photo below.

STEP 17: CHECK YOUR FLARE MEASUREMENT

Measure the upper drop tube for the correct length. The Upper Drop tube mark should be at the base of the flare. See Photo Below.

STEP 18: INSTALLING THE DROP TUBE SEAL

Install the Phil-Tite Special Designed Drop Tube "O" Ring Seal (**85039-DT**) onto the drop tube with the flat side up against the drop tube flare. See Photo Below.

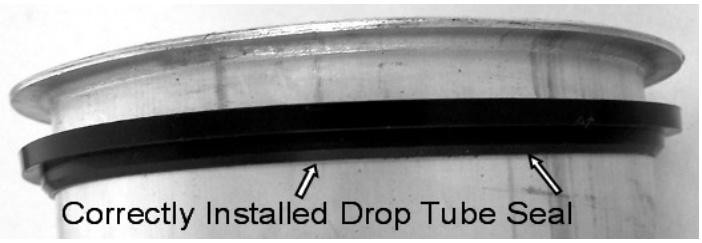

STEP 19: INSTALLING LOWER DROP TUBE ASSEMBLY

If a vise is used, clamp on the valve body casting only to avoid damage to the float. Mix the two-part JB Kwik provided until the color is uniform. Using a mixing stick, **generously apply J-B Kwik to the first 6 male threads on the valve body** as shown in figure 10. Make sure coverage is completely around the threads, and work the sealant down into the thread profile. Quickly thread the lower tube onto the valve body. Tighten the tube securely by hand or with a strap wrench. Remove excess sealant and smooth sealant bead with water moistened mixing stick.

Important: Allow sealant (J-B Kwik) to cure for 4- 6 hours before installing into tank.

Figure 10

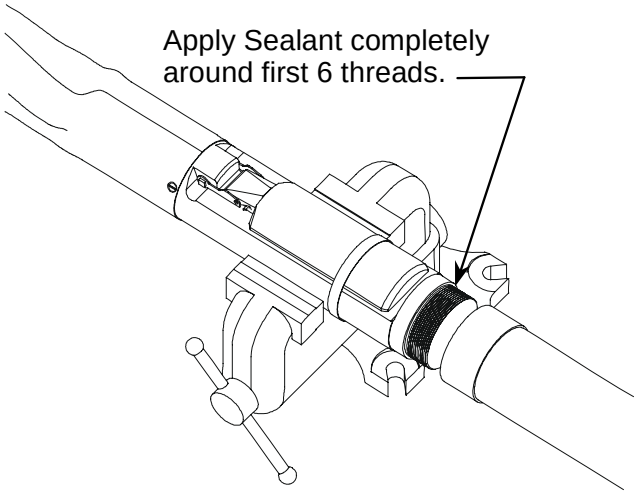

Note: After the sealant (JB Kwik) has cured and before installing the drop tube into the tank, a pressure test can be performed on the valve to check for vapor tightness. Seal off both ends of the tube with inflatable plumber's plugs. Apply a maximum 10" W.C. (1/3 PSI) air pressure. If pressure does not hold and a leak can be located with soap solution, do not install the valve. Send the valve back to PHIL-TITE for warranty evaluation.

Caution: Do not over-pressurize. Excess pressure can damage the valve.

STEP 20: CUTTING LOWER END OF DROP TUBE

Measuring from the underside of the inlet tube flange, mark the overall length of the drop tube a distance of (B) minus 6" or as per local codes or requirements. Determine dimension (B) from the Drop Tube Measurement Worksheet taken in Step 3, Figure 1 (Top of the PHIL-TITE M/F 4 X 4 Riser Adaptor to the bottom of the tank). Saw/Cut off the excess tube and file off any sharp burrs.

Optional: Install the PHIL-TITE Tank Bottom Protector on the lower tube (Refer to Installation instructions supplied with the Tank Bottom Protector).

STEP 21: PREPARE TANK RISER FOR OVERFILL VALVE INSERTION

IMPORTANT: Inspect the riser pipe for any foreign material. Over spray from tank relining or any internal burrs inside of pipe must be removed prior to installation. Failure to have an unobstructed riser pipe may prevent proper installation or operation of the valve. Thoroughly clean top of riser pipe.

Important: Before installing the drop tube, allow the sealant to cure for 4 - 6 hours.

STEP 22: REMOVE ELASTIC BAND

Remove the elastic band securing the float to the valve body. The float will move into an outward position.

STEP 23: INSTALL DROP TUBE

Make sure the special drop tube “O” Ring (85039-DT) is installed correctly. Hold the float down against the valve body and slowly insert the drop tube into the riser pipe. Do not force the valve into the riser pipe. If any obstruction or foreign matter interferes with smooth insertion of the valve, the riser pipe must be cleared.

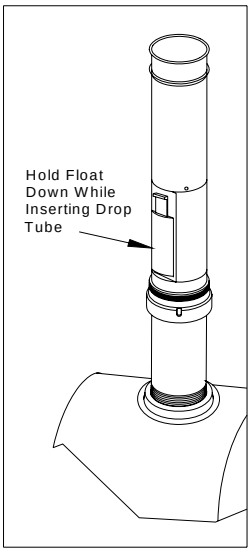

WARNING

Failure to follow the assembly and installation instructions or use of excessive force to insert the 61SO - PT will <u>VOID THE WARRANTY</u>!

STEP 24: CHECK INSTALLATION

Insert the drop tube all the way into the tank until the flange and gasket seat onto the top of the Phil-Tite M/F 4 X 4 Riser Adapter. The float will swing out into the operating position as it passes into the tank.
Make sure that the float is aligned along the length of the tank. The length of the tank can easily be determined by locating other manholes or pump boxes that are installed around other tank fittings. Look into the drop tube and align the deflector with the length of the tank. **<u>CAUTION:</u>** No obstruction in the tank can be within 13" from the center of the riser pipe or the valve may not operate properly.

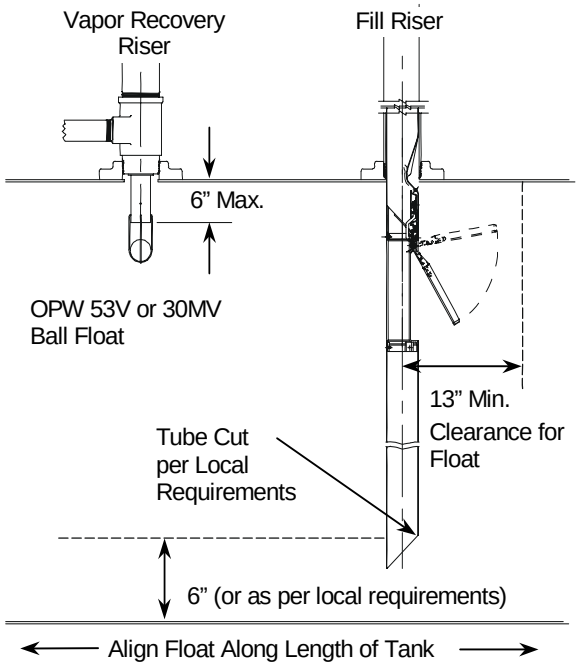

Figure 25

STEP 25: FINAL INSTALLATION

Install a PHIL-TITE Fill Spill Container according to the manufacturer’s installation instructions. Ensure that the drop tube does not rotate while tightening the Spill Container by observing the position of the deflector. Install a PHIL-TITE Rotatable swivel adaptor and tighten according to the manufacturer’s installation instructions.

STEP 26: INSTALL WARNING PLATE

Slide the tie wrap over the warning plate ears and position warning plate against riser pipe approximately 1" below the adaptor. Tighten the tie wrap securely. The valve is now fully installed and in operating position.

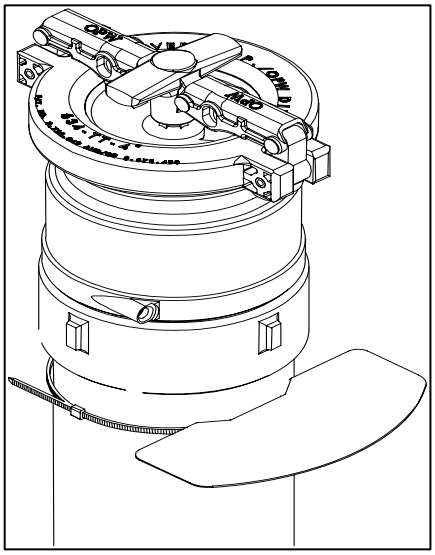

Figure 26

STEP 27: VALVE REMOVAL

The Over-fill prevention valve can be removed from the tank by removing the PHIL-TITE Swivel Adaptor and Spill Container. Reinstall per the above instructions.

Step 28: Electronic Liquid Level Monitoring

If an electronic level monitor is installed, it must be calibrated to match the top of the 61SO-PT valve body, correlated to the 95% tank level dimension used during assembly.

PREVENTATIVE MAINTENANCE

Annually, inspect the Phil-Tite 61SO-PT by looking down the drop tube opening and ensure that the over-fill valve is open and installed inside. Inspect for any foreign objects inside the drop tube. None are allowed. Check to see if any over-fill conditions have occurred since the last inspection. If an over-fill has occurred did the over-fill valve perform correctly?

<u>CAUTION:</u> Do not insert any foreign object into drop tube if flapper is in the closed position. For example a tank level measuring stick. This will damage the valve and void the Warranty. ALWAYS check the valve position before "sticking" the tank. If valve is in the closed position the tank is either over filled and you need to wait until the liquid level goes down or the 61SO- PT is damaged and needs to be replaced.

Phil-Tite 61SO- PT Performance

Specifications:

This Overfill Prevention Valve was manufactured by OPW and has been tested by OPW to meet the following specifications: "The maximum leak rate does not exceed 0.17 CFH at 2.00" W.C. when tested in accordance with CARB TP-201.1C or D.

Important: Leave these installation instructions and maintenance procedures with the station operator.

Warranty card for Phil-Tite 61SO-PT Drop Tube with Overfill Prevention

Please detach here, fill out completely, and promptly mail back to manufacturer.

Phil-Tite Enterprises, Inc.
3732 Electro Way
Redding, CA 96002
Phone - 530-223-7400
Fax - 530-223-7418

WARRANTY CARD

This product is warranted by Phil-Tite Enterprises, Inc. against defective material and workmanship for 1 (one) year from installation date. We will repair/replace, as we deem necessary, product that has been verified defective by a representative of our company. Any damage caused by either freight or wrongful installation are not covered under this warranty. This warranty does not cover normal wear, or force majeure - caused by fire, flood, earthquake, explosion, war, or acts of God. Seals and O-rings are not a warranty item. Warranty is null and void if a) item is disassembled, b) item is installed improperly, or c) warranty label has been tampered with or is removed from product.

Expiration Date: _____

Serial Number: _____

Model Number: _____ Mfg. Number: _____

This card must be returned to manufacturer for warranty to be honored

TO BE FILLED OUT BY INSTALLER/MAINTENANCE PERSON

Name of Maintenance/Service Company:

_____

Address:

_____

_____

Date of Install: _____

Name and Location of Install:

_____

_____

_____

_____

Figure J-1

Phil-Tite Model M-6050 Vapor Recovery Riser Offset

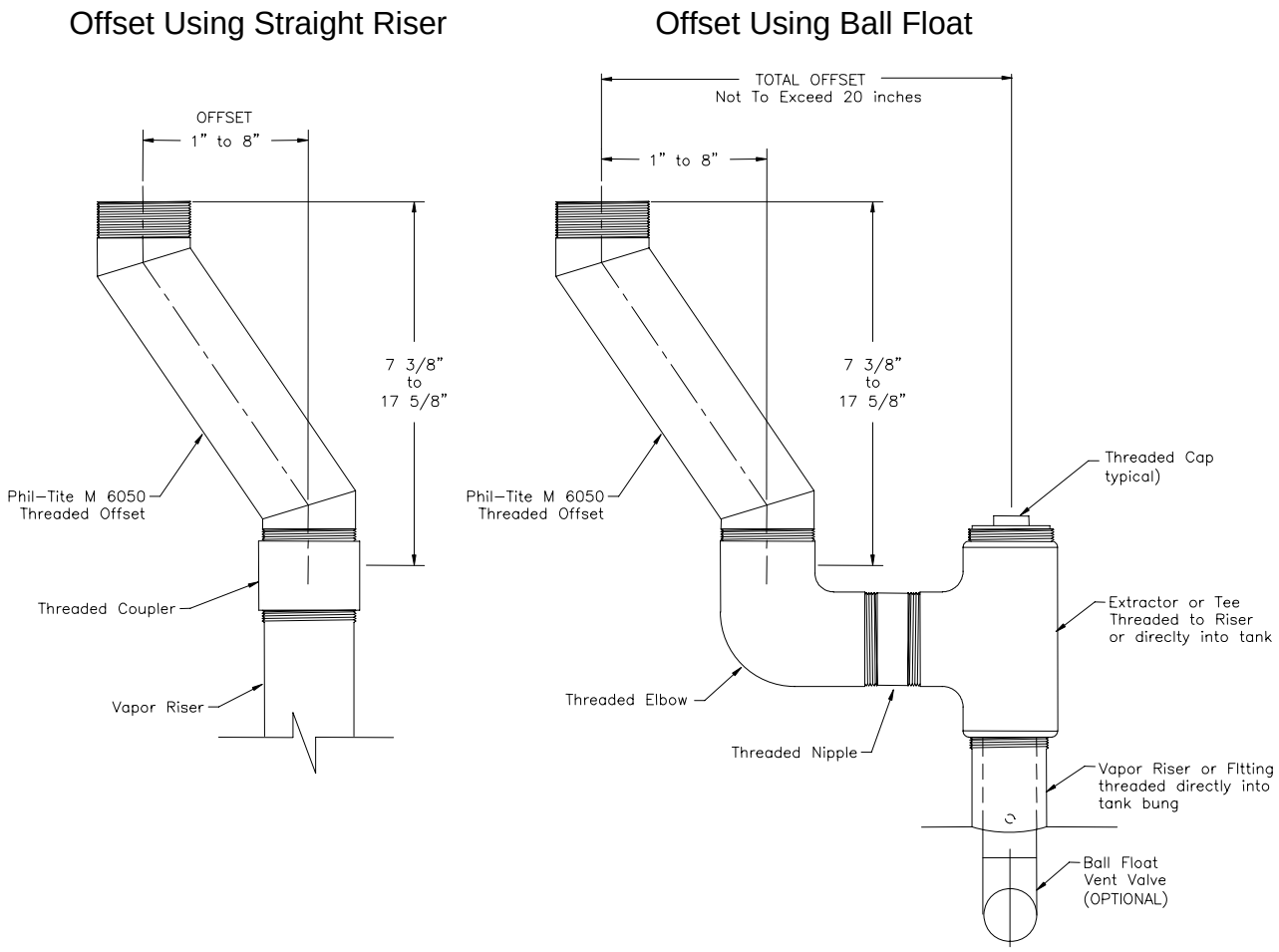

Phil-Tite M-6050 Vapor Riser Offset

INSTALLATION:

(1) On the underground storage tank, measure the tank bungs from center to center and then subtract 16 inches from that measurement. The result will match the size of the M-6050 Vapor Riser Offset required which also includes additional space for connections or fittings.

Example: If the tank bungs measure out to 22 inches center to center and you subtract 16 inches, you will have a maximum size, 6-inch M-6050 Vapor Riser Offset for your application.

(2) Apply a gasoline resistant, non-hardening thread sealant to the TANK END ONLY of the M-6050 using the sealant manufacturers recommended instructions. The use of sealant on the spill container end varies by manufacturer.

(3) By hand, thread the M-6050 into the pipe coupler or threaded fitting depending on your configuration (see figures). By hand, thread the entire assembly onto the underground storage tank.

Note: If a Ball Float Vent Valve is to be installed, you must use a threaded connection to allow the installation and removal of the Ball Float Vent Valve.

(4) Tighten the M-6050 and threaded fittings to a torque value between the range of 150 and 200 Ft-lbs.

Figure K-1

Phil-Tite Model M-1600 Riser Support Bracket

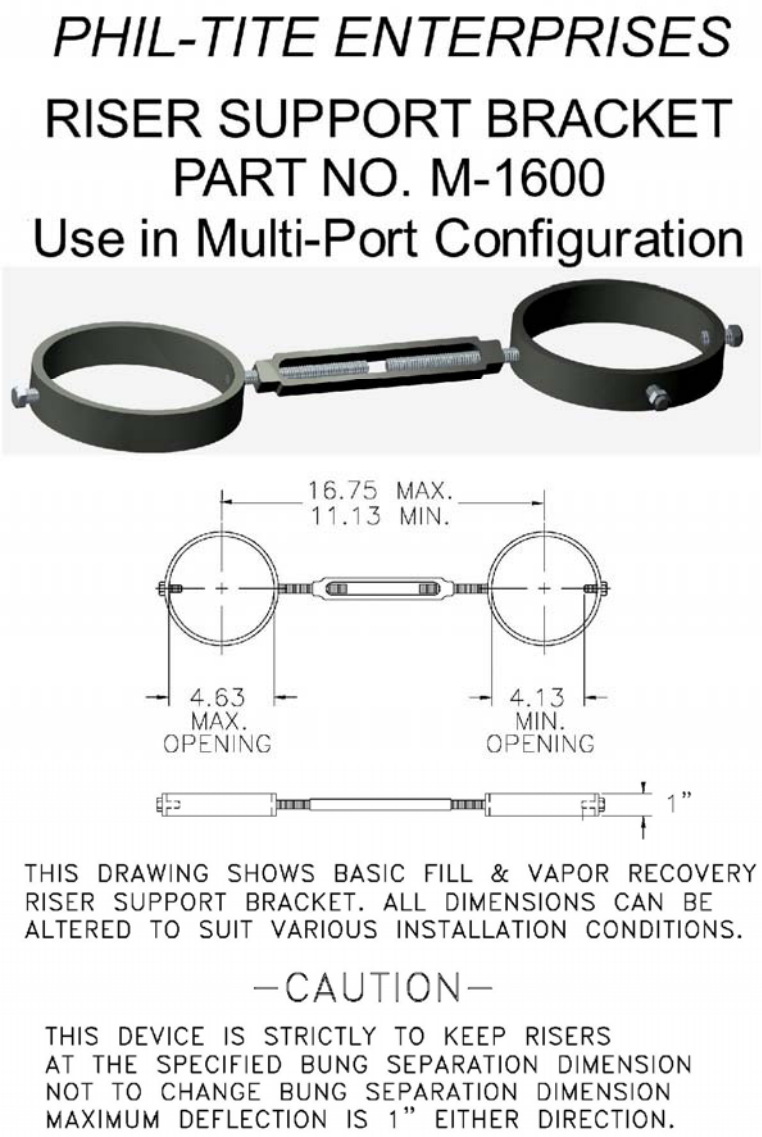

Figure L-1

Typical Phil-Tite Double Fill Configuration

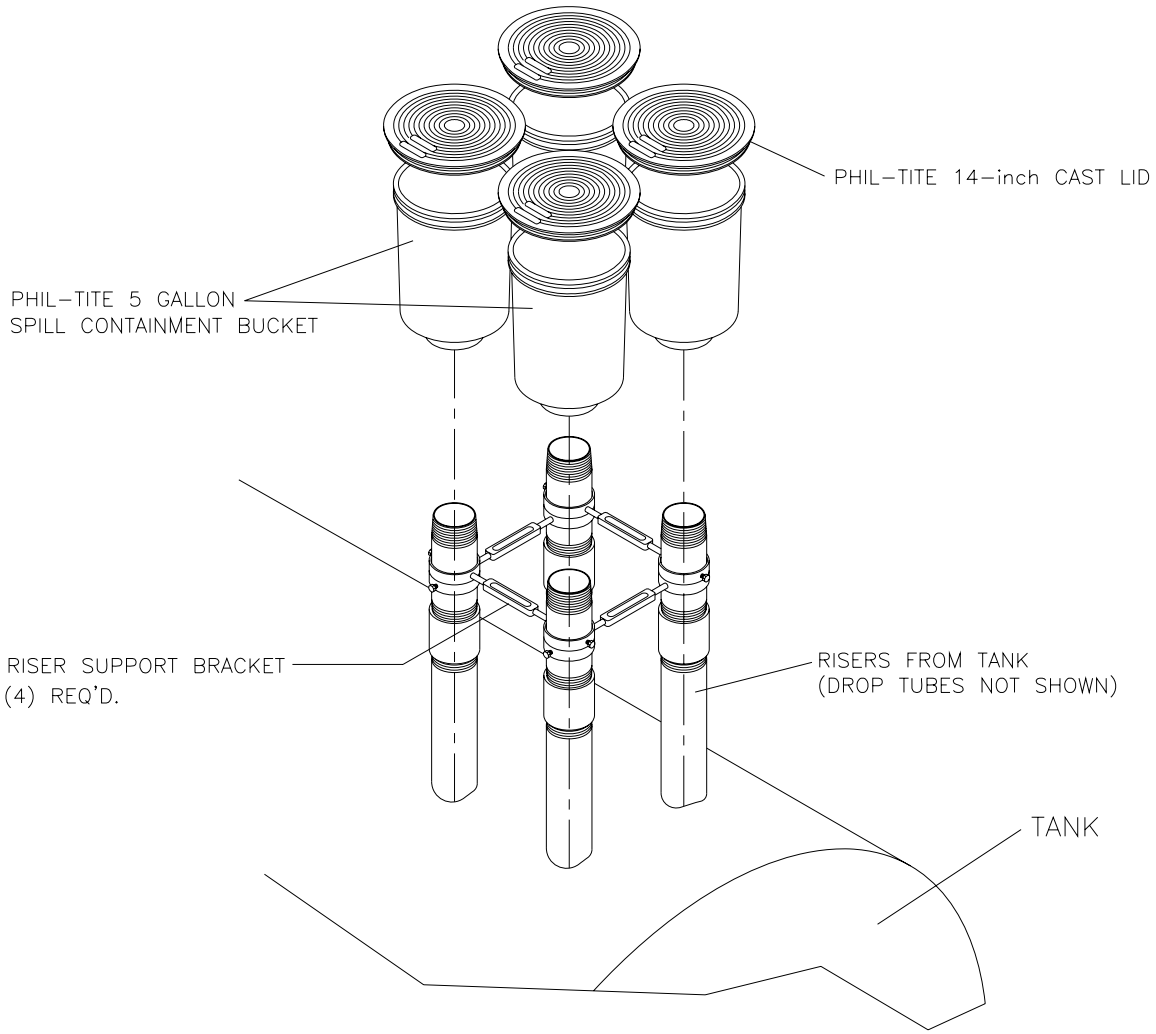

Figure L-2

Phil-Tite 85000-EXT-CA2 Sump Configuration
Using Fiberlite FL 36-inch diameter Raised Composite Cover

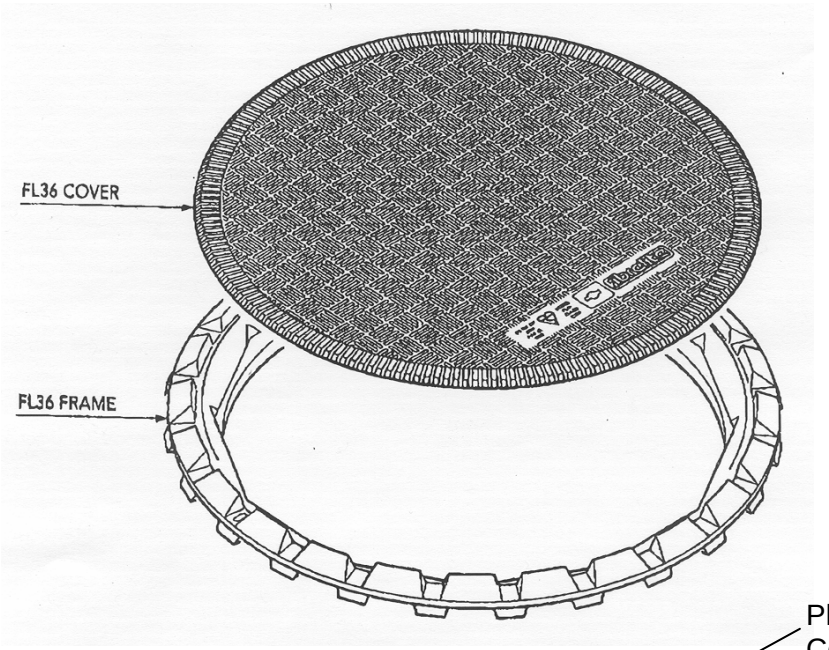

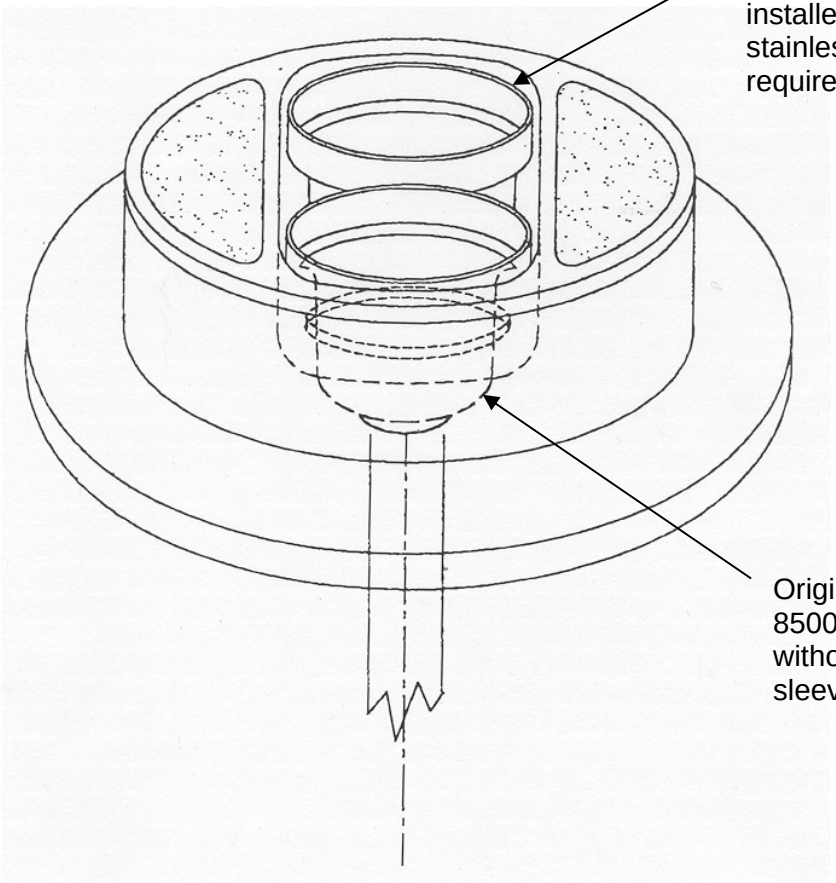

Phil-Tite 85000-EXT Spill Container with permanently installed nylon ring (no stainless steel sleeve required).

Original Phil-Tite 85000 Spill Containers without stainless steel sleeves.