California Environmental Protection Agency

Air Resources Board

ARB Approved

Installation, Operation, and Maintenance Manual For the OPW Phase I Vapor Recovery System

Approved: September 26, 2002
Amended: September 15, 2003
Amended: January 9, 2004
Amended: April 27, 2004
Amended: October 15, 2004

Summary of Guidelines for Maintenance Activities Required of the OPW Phase I Vapor Recovery System [1]

Component	Interval	Maintenance To Be Performed
Pressure/Vacuum Vent Valve OPW 623V	Annual	Upper Screen 1. Remove vent top by depressing tabs on side of valve. Screen will slip up and out of valve. 2. Clean or replace filter screen as necessary and reinstall. 3. Reinstall vent top by reinserting into the body. Be sure the tabs are inside the valve body and then rotate top until the tabs snap into place. Lower Screen 1. Remove valve assembly from pipe adaptor 2. Lift the filter screen out and clean or replace as necessary. 3. Reinstall filter screen in the pipe adaptor. 4. Reinstall valve assembly on pipe adaptor and tighten until it stops.
Husky 4885	Annual	1. Remove screws that hold top cover on. 2. Remove any debris that might be sitting inside the lower cover. 3. Check the drain holes in the lower cover for blockage. 4. Do not remove the two (2) screens. 5. Reinstall the top cover and retaining screws. 6. Tighten the screws firmly.
Spill Containers and Drain Valves OPW/POMECO "All Models"	Annual and after each delivery	After each delivery, the operator must remove any standing fuel from the container. Annually, clean the interior of the container and drain valve. Annually, remove accumulated dirt and grit. If the drain valve becomes clogged, remove the valve, soak in water, and use high-pressure air to clean. If valve is removed, reinstall to its proper position and perform CARB TP-201.1C or TP-201.1D
Dust Caps OPW "All Models"	Annual	Visually inspect the seal in cap and replace if damaged or missing.
Product Adaptor OPW 61SALP	Annual	Visually inspect the adaptor for large dents, cracks, or deformations.

[1] **These maintenance requirements shall not circumvent use of the manufacturer's installation and maintenance instructions. Maintenance contractors or owner/operators shall refer to the manufacturers complete installation and maintenance instructions found herein for the OPW Phase I System to ensure that all maintenance and torque requirements are met.**

Summary of Guidelines for Maintenance Activities Required of the OPW Phase I Vapor Recovery System [1]

Vapor Adaptor OPW 61VSA	Annual	Visually inspect the adaptor for large dents, cracks, or deformations. Check the vapor poppet for damage and ensure that the poppet seats evenly with the adaptor. Clean out any foreign objects from the vapor poppet's seal and seal surface if necessary. Test the poppet seal by applying a soap solution to the poppet while the underground storage tank is under a positive gauge pressure of at least 2.00 inches W.C and inspect for the presence of bubbles. If the facility continuously operates under vacuum, a bag test may be used by sealing a clear plastic bag to the adaptor's sides. If no bubbles appear at the poppet under positive pressure or the bag test shows no signs of the bag collapsing, no further maintenance is required. If bubbles appeared around the poppet seal or the bag collapsed, replace the poppet components and re-test.
Extractor Assembly OPW 233	None	No maintenance is required for this product.
Ball Floats OPW "All Models"	3 years	Visually inspect the valve for damage, contamination, corrosion, freedom of movement of the ball float, and check the bleeder orifice for proper airflow. Replace if damaged or corroded.
Jack Screw Kit OPW 61JSK-4410 OPW 61JSK-44CB OPW 61JSK-4400-EVR	Annual	Visually inspect the Jack Screw for proper alignment and installation.
Face Seal Adaptor OPW FSA-400 OPW FSA-400-S	None	No maintenance is required for this product.
Drop Tubes OPW 61T	Annual	Visually inspect Drop Tube to see if it is installed and ensure that the bottom of tube is within 6 inches of the bottom of tank. Test the drop tube seal with ARB procedure TP-201.1C or TP-201.1D as applicable. If the drop tube seal passes testing, no further maintenance is required. If the drop tube seal fails testing, replace the drop tube seal with OPW P/N: H11931M for 4" Tubes. Re-test the drop tube seal with ARB procedure TP-201.1C or TP-201.1D as applicable.

[1] **These maintenance requirements shall not circumvent use of the manufacturer's installation and maintenance instructions. Maintenance contractors or owner/operators shall refer to the manufacturers complete installation and maintenance instructions found herein for the OPW Phase I System to ensure that all maintenance and torque requirements are met.**

Summary of Guidelines for Maintenance Activities Required of the OPW Phase I Vapor Recovery System [1]

Drop Tube Overfill Prevention Device OPW 61SO	Annual	Annually, inspect the flapper in the 61SO to see that it is open by looking down the drop tube opening. Test the 61SO seals with ARB procedure TP-201.1D. If the drop tube passes testing, no further maintenance is required. If the drop tube fails testing, replace the drop tube seal with OPW P/N: H11931M. Re-test the 61SO with ARB procedure TP-201.1D. If this does not correct the leak the 61SO needs to be replaced.
Tank Bottom Protector OPW/POMECO 6111-1400	None	No maintenance is required for this product.
Tank Gauge Port Components Morrison Brothers 305 Ever-Tite 4097 Veeder-Root 312020-952	Annual	Visually inspect cap to see that it is not missing any seals and is properly installed.

[1] **These maintenance requirements shall not circumvent use of the manufacturer's installation and maintenance instructions. Maintenance contractors or owner/operators shall refer to the manufacturers complete installation and maintenance instructions found herein for the OPW Phase I System to ensure that all maintenance and torque requirements are met.**

OPW
EVR Phase I Equipment
Installation Check List
(Revised 08/25/04)

Site Identification Information

Site Address:

_____

_____

_____

Installing Company: _____

Technician's Name **(Print Clearly)**: _____

Technician's Signature: _____

Date of Installation: _____

OPW
EVR Phase I Equipment
Installation Check List
(Revised 08/25/04)

Components Installed

OPW 500 Series EVR Fill Spill Containment Bucket	Yes ___	No___
OPW 500 Series EVR Vapor Spill Containment Bucket	Yes ___	No___
OPW 2100 Series EVR Fill Spill Containment Bucket	Yes ___	No___
OPW 2100 Series EVR Vapor Spill Containment Bucket	Yes ___	No___
OPW FSA-400, or FSA-400-S Threaded Riser Adaptor (Face Seal Adaptor)		
On Fill Riser (Required)	Yes ___	No ___
On Tank Probe Riser (Required)	Yes ___	No ___
On Vapor Riser (Optional)	Yes ___	No ___
OPW 61SO 400 EVR Series Overfill Prevention Valve	Yes ___	No ___
OPW 61T Series Straight Drop Tube	Yes ___	No ___
OPW 61JSK Jack Screw Assembly		
61JSK-4410 (Use with composite base spill bucket)	Yes ___	No ___
61JSK-44CB (Use with cast iron base spill bucket)	Yes ___	No ___
OPW 61VSA Vapor Swivel Adaptor	Yes ___	No ___
OPW 61SALP Fill Swivel Adaptor	Yes ___	No ___
OPW 634TT Top Seal EVR Fill Cap	Yes ___	No ___
OPW 1711T Top Seal EVR Vapor Cap	Yes ___	No ___
OPW 634LPC Low Profile Top Seal EVR Fill Cap	Yes ___	No ___
OPW 1711LPV Low Profile Top Seal EVR Vapor Cap	Yes ___	No ___
OPW 623 Pressure Vacuum Vent	Yes ___	No ___
OPW 233 Extractor	Yes ___	No ___
OPW 53VML Ball Float Vent Valve	Yes ___	No ___
OPW 30MV Ball Float Vent Valve	Yes ___	No ___

Installation Acknowledgment

Installed OPW FSA-400 (-S) Threaded Riser Adaptor (Face Seal Adaptor) on fill riser and tightened to _____ ft. lb.

Thread sealant compound used_____

Installed OPW FSA-400 (-S) Threaded Riser Adaptor (Face Seal Adaptor) on tank probe riser and tightened to _____ ft. lb.

Thread sealant compound used_____

Optional

Installed OPW FSA-400 (-S) Threaded Riser Adaptor (Face Seal Adaptor) on vapor riser and tightened to _____ ft. lb.

Thread sealant compound used_____

Installed OPW 2100 Series ____ or 500 Series ___ Fill spill containment bucket onto FSA-400 attached to fill riser and tightened to _____ ft. lb.

Thread sealant compound used_____

Installed OPW 2100 Series ____ or 500 Series ____ vapor spill containment bucket onto vapor riser and tightened to _____ ft. lb.

Thread sealant compound used_____

Assembled 61SO-400C-EVR Series overfill prevention valve

Used OPW supplied epoxy Yes ___ No ___

Applied epoxy: To upper 1" inside of top tube, under cinch head bolts and lock washers, on threads of valve body at lower tube connection.

Yes ___ No ___

Allowed epoxy to cure for 24 hours before exposure to fuel or vapor

Yes ___ No ___

Installed OPW 61SO 400C-EVR Series overfill prevention valve into fill spill containment bucket.

Yes ___ No ___

Alternative to 61SO

Installed OPW 61T Straight Drop Tube into fill spill containment bucket. Yes ___ No ___

Installed OPW 61JSK Jack Screw assembly on top of 61SO 400C-EVR Series overfill prevention valve or on top of 61T Series Straight Drop Tube. Yes ___ No ___

Lock-Tite applied to screws Yes ___ No ___

Screws tightened to _____ ft. lb.

Installed faced off 4" NPT pipe nipple in fill spill containment bucket and tightened nipple to _____ ft. lb.

Thread sealant compound used _____

Tool used to install nipple _____

Installed faced off 4" NPT pipe nipple in vapor spill containment bucket and tightened nipple to _____ ft. lb.

Thread sealant compound used _____

Tool used to install nipple _____

Installed OPW 61 SALP Fill Swivel Adaptor onto faced off 4" NPT pipe nipple in fill spill containment bucket and tightened fill adaptor to _____ ft. lb.

Thread sealant compound used _____

Tool used to install nipple _____

Installed OPW 61 VSA Vapor Swivel Adaptor onto faced off 4" NPT pipe nipple in vapor spill containment bucket and tightened vapor adaptor to _____ ft. lb.

Thread sealant compound used _____

Tool used to install nipple _____

OPW 61 SA-Tool used to install OPW components Yes ___ No ___

Table of Content

OPW Installation, Operating and Maintenance Manual

Equipment	Manufacturer/Model Number	Figure	Page
Typical Installation (Product Side)		**A-1**	**1**
Typical Installation (Vapor Side)		**A-2**	**2**
Typical OPW/POMECO Double Fill Configuration		**A-3**	**3**
Spill Containers and Covers	OPW TTT-21WWWX-YZZZ TTT indicates spill bucket material/cover type: (not required with sump configuration lid) 1 = Aluminum 1C = Cast iron 1SC = Sealable aluminum cover with an expandable seal. WWW Indicates bucket size: 00 = 5-gallon 15 = 15-gallon 00E = 7.5-gallon (deep bucket model) X indicates bucket base type: C = Cast Iron No letter indicates composite base Y indicates drain valve or plug ZZZ indicates special configuration EVR = Standard SH = Self supporting container without ring and cover	**B-1**	**4**
	Pomeco 5XX XX indicates spill bucket material/cover type 11 = Composite base, bolt down cover 21 = Composite base, roto-lock cover 61 = Cast iron base, bolt down cover 71 = Cast iron base, roto-lock cover	**B-1**	**4**
Sump Configuration Lid [1]	Fibrelite FL-36 inch	**B-2**	**7**
Replacement Drain Valve Kit	OPW 1DK-2100	**C-1**	**8**

[1] Component optional for vapor recovery; may be required by other applicable regulations.

Dust Caps	OPW	634TT-EVR (product)	**D-1**	**10**
	OPW	1711T-EVR (vapor)	**D-1**	
	OPW	634LPC (product)	**D-2**	**11**
	OPW	1711LPC (vapor)	**D-2**	
Product Adaptor	OPW	61SALP-EVR	**E-1**	**14**
Vapor Adaptor	OPW	61VSA-EVR	**F-1**	**14**
Extractor Assembly[1]	OPW	233	**G-1**	**16**
Ball Float Vent Valve[2]	OPW	53VML	**G-1**	**16**
	OPW	30MV		
Jack Screw Kit	OPW	61JSK-4410	**H-1**	**18**
	OPW	61JSK-44CB		
	OPW	61JSK-4400-EVR	**H-2**	**24**
Face Seal Adaptor	OPW	FSA-400	**H-3**	**28**
	OPW	FSA-400-S	**H-3**	
Drop Tube	OPW	61T (various lengths)	**H-4**	**29**
Drop Tube Overfill Prevention Device[1]	OPW	61SO-XXXC-EVR Where XXX = 400, 410, 412, 420 or 440	**J-1**	**30**
Double Fill	(Configuration Only)		**K-1**	**38**
Tank Bottom Protector[1]	OPW/Pomeco 6111-1400		**L-1**	**42**
Pressure/Vacuum Vent Valve	Husky	Model 4885, 2-Inch Threaded	**M-1**	**44**
	OPW	623V, 2-Inch and 3-Inch Threaded	**M-2**	**45**
Tank Gauge Port Adaptor and Cap	Morrison Brothers 305XPA1100AKEVR (cap and adaptor kit)		**N-1**	**48**
	Morrison Brothers 305-0200AAEVR (replacement adaptor)			
	Morrison Brothers 305XP-110ACEVR (replacement cap)			
	Ever-Tite 4097AGBR Adaptor		**N-2**	**49**
	Ever-Tite 4097AGMBRNL Adaptor			
	Ever-Tite 4097MBR Cap			
	Veeder-Root 312020-952 (cap & adaptor)		**N-3**	**50**

[1] Component optional for vapor recovery; may be required by other applicable regulations.
[2] The 53VML and 30MV includes both the 2” and 3” models.

Typical Product Installation Using OPW System

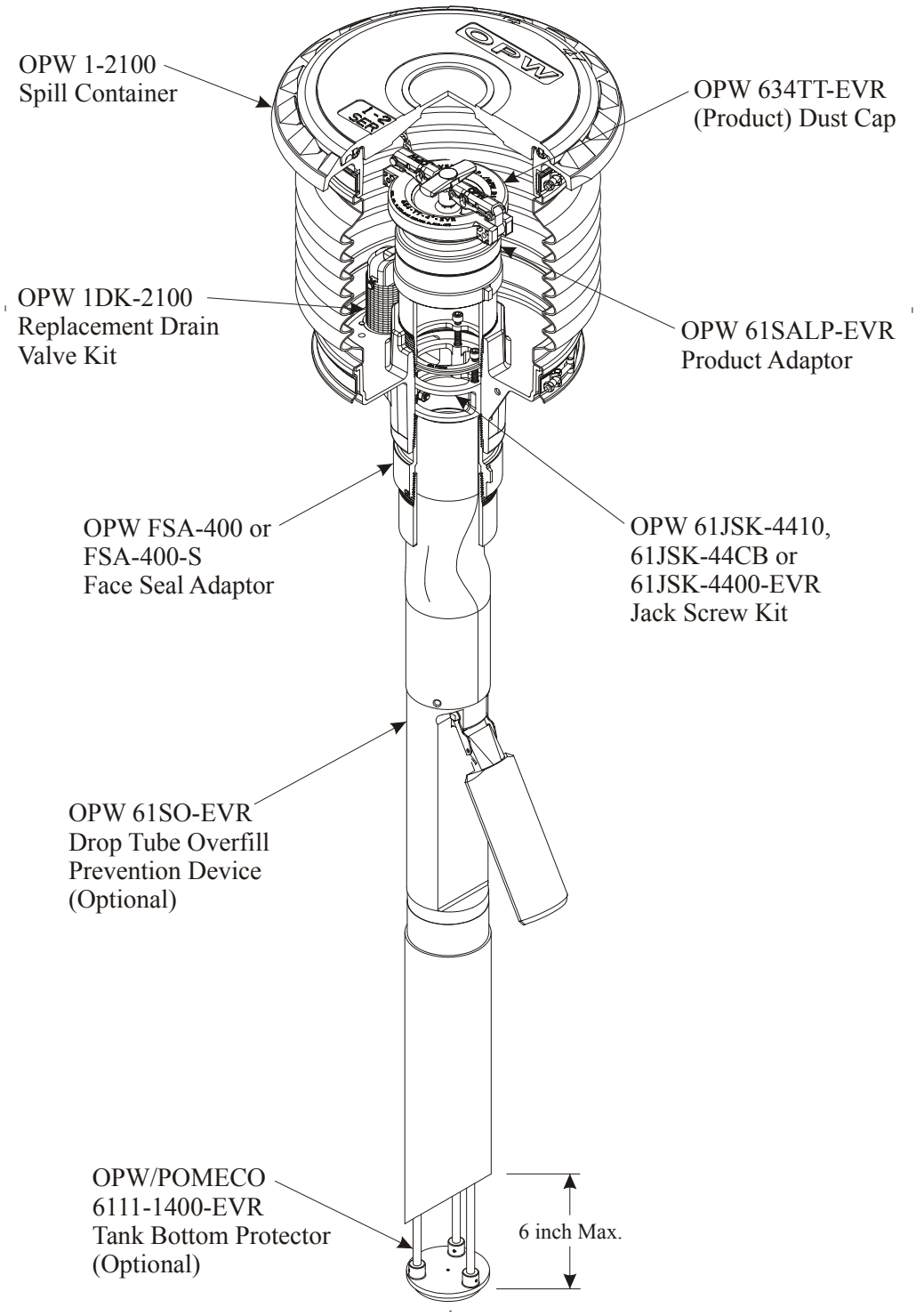

Figure A-2

Typical Vapor Installation Using OPW System

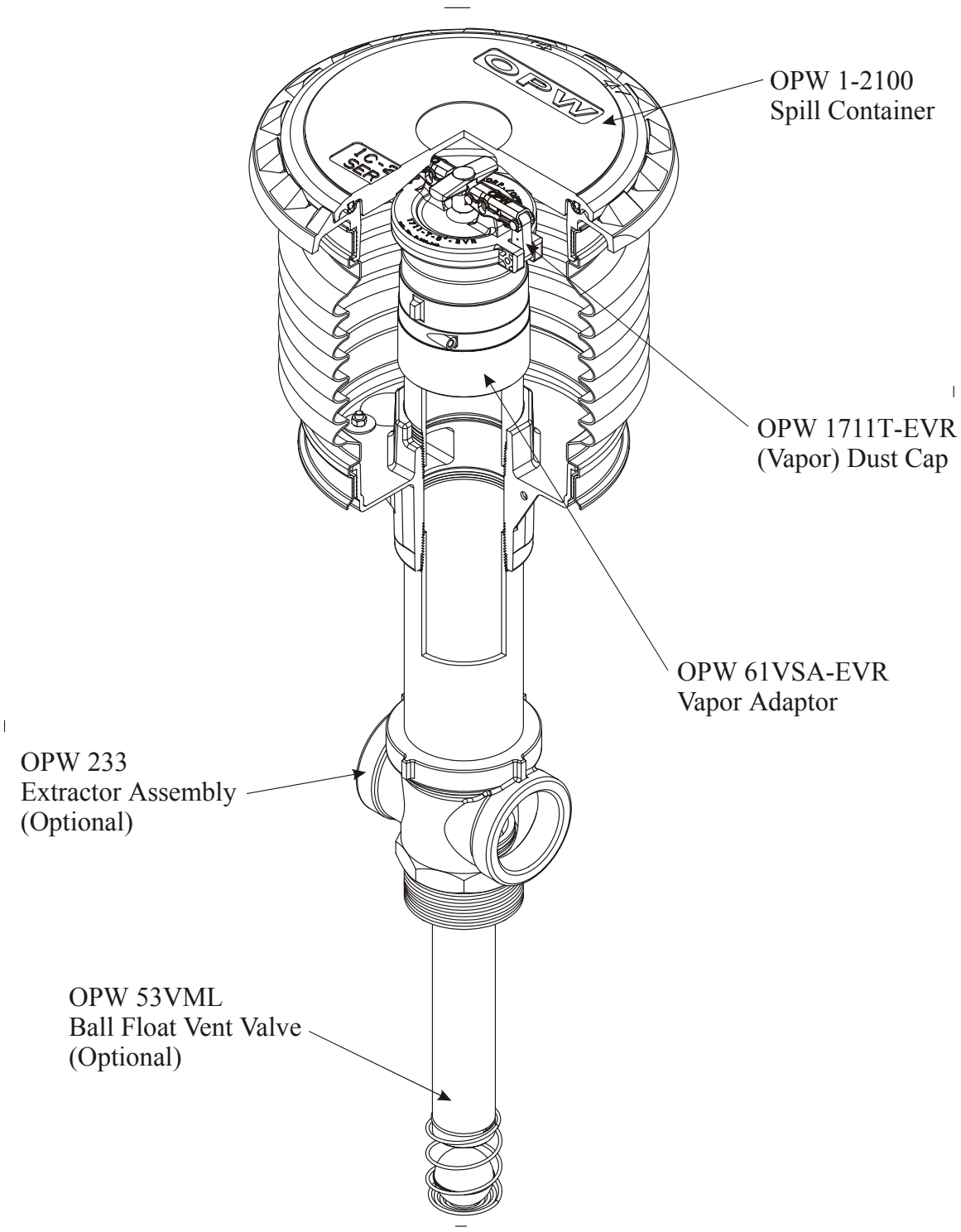

Figure A-3

Typical OPW/POMECO Double Fill Configuration

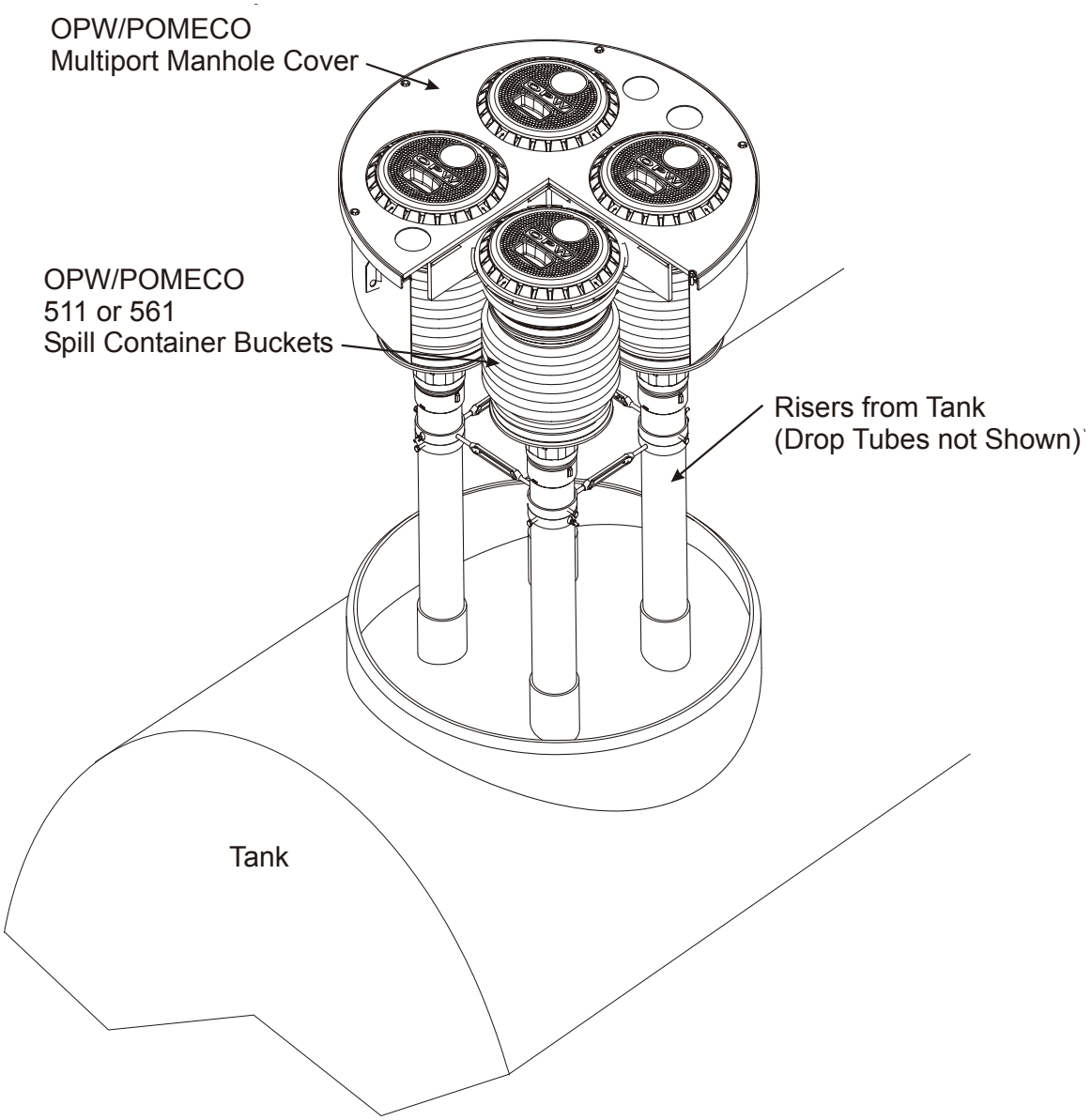

Figure B-1

OPW Installation and Maintenance Instructions

OPW 1-2100 Series Thread-On Grade Level Spill Containers

IMPORTANT: Please read these warnings and use the assembly instructions completely and carefully before starting. Failure to do so may cause product failure, or result in environmental contamination due to liquid leakage into the soil, creating hazardous spill conditions.

IMPORTANT: The OPW 1-2100 Spill Container is pre-assembled for your convenience and ease of installation. Check to make sure the unit is intact and undamaged and all parts have been supplied. Never substitute parts for those supplied. Doing so may cause product failure.

WARNING-DANGER: Using electrically operated equipment near gasoline or gasoline vapors may result in a fire or explosion, causing personal injury and property damage. Be sure that the working area is free from such hazards, and always use proper precautions.
NOTE: At all times when product is in the storage tank keep the riser pipe capped, so the vapors cannot escape into the environment.

Notice: OPW products must be used in compliance with applicable federal, state, and local laws and regulations. Product selection should be based on physical specifications and limitations and compatibility with the environment and material to be handled. All illustrations and specifications in this literature are based on the latest production information available at the time of publication. Prices, materials, and specification are subject to change at any time, and models may be discontinued at any time, in either case, without notice or obligation.

Standard Product Warranty

OPW warrants that products sold by it are free from defects in materials and workmanship for a period of one year from the date of manufacture by OPW (ECO products two years from date of manufacture.) Proof of purchase may be required. As the exclusive remedy under this limited warranty, OPW, will at its sole discretion, repair, replace, or issue credit for future orders for any product that may prove defective within the one year date of manufacture period (repairs, replacements, or credits may be subject to prorated warranty for remainder of the original warranty period, complete proper warranty claim documentation required.) This warranty shall not apply to any product that has been altered in any way, which has been repaired by any party other than a service representative authorized by OPW, or when failure is due to misuse, or improper installation or maintenance. OPW shall have no liability whatsoever for special, incidental or consequential damages to any party, and shall have no liability for the cost of labor, freight, excavation, clean up, downtime, removal, reinstallation, loss of profit, or any other cost or charges.

For any product certified to California 2001 standards, OPW warrants that product sold by it are free from defects in material and workmanship for a period of one year from date of manufacture or one year from date of registration of installation not to exceed 15 months from date of manufacture by OPW.

THIS WARRANTY IS IN LIEU OF ALL OTHER WARRANTIES, EXPRESS OR IMPLIED, AND SPECIFICALLY THE WARRANTIES OF MERCHANTABILITY AND FITNESS FOR A PARTICULAR PURPOSE. THERE ARE NO WARRANTIES, WHICH EXTEND BEYOND THE DESCRIPTION ON THE FACE HEREOF.

In California it is prohibit to use spill container drain valves on spill containers that are exclusively used for vapor return risers. Install only 1-2100 Series Thread-On spill containers models equipped with a drain plug.

1-2100 Series Performance Specifications:

This Spill Container drain valve has been manufactured and tested to the following California specifications: Leak Rate to be less than or equal to 0.17 CFH @ 2.0 " W.C.

Torques Specification:
Spill Container 4" NPT, 125 ft-lbs minimum to 250 ft-lbs maximum.

4" Nipple, 4" NPT, 125 ft-lbs minimum to 250 ft-lbs maximum.

Drain Valve clamps, 5/16-18 UN thread, 11.5 ft-lbs minimum to 13.5 ft-lbs maximum.

OPW NO. 1-2100 SERIES GRADE LEVEL SPILL CONTAINER INSTALLATION INSTRUCTIONS:

Step1.
Per California SB-989, all metal must be protected from direct contact with the elements. Coat stainless steel band clamps with the following approved coatings. OPW SL-1100, 3M Underseal 08883 or Polyguard Mastic CA-9. Only the threaded hardware needs to be coated in the field.

Step 2: (See Figure 1 & 2)
Set riser pipe. "L" is the distance between the top of the riser pipe and finish grade.

Model Series	"L" Dimension
1-2100, 5 Gallon	L=15" (38cm)
1-2100E, 7.5 Gallon (Deep Bellows Model)	L=21" (53cm)
1-2115, 15 Gallon	L=20" (51cm)

Note:
For Cast Iron base, subtract 1-1/2" from Dimension "L".
If using OPW FSA-400, add 3-1/4" to Dimension "L".
If using OPW FSA-400-S, add 1-3/4 to Dimension "L".
NOTE: FSA-400-S will only work with Cast Iron Base.

Step 3:
Deburr and thoroughly clean riser pipe. Apply pipe dope to riser threads. Pipe dope to be a non-hardening, gasoline resistant pipe thread seal compound.

Step 4:
Install OPW FSA-400 Face Seal Adapter onto riser using the OPW 61SA-TOOL. Torque to 125 ft-lbs min. to 250 ft-lbs max.(4" NPT). Apply pipe dope to FSA-400. Pipe dope to be a non-hardening, gasoline resistant pipe thread seal compound.

Step 5:
Install spill container by rotating the mounting ring until hand tight.
NOTE: Do not attempt to completely tighten the container by using the mounting ring

Step 6:
Finish tightening the spill container with the OPW 61SA-TOOL. Torque to 125 ft-lbs min. to 250 ft. Lbs. max. (4" NPT)

Step 7: (See Figure 2)
Apply pipe dope to nipple and install. Pipe dope to be a non-hardening, gasoline resistant pipe thread seal compound. Use only factory made nipples. Nipples must be cut square and deburred. Torque to 125 ft-lbs min. to 250 ft-lbs max. (4" NPT). Torque value is based on rotation at the center of pipe. For standard cover models install adaptor and dust cap. For sealable cover (1SC) models, install a standard 4" pipe cap to support adjustment system. (Adaptor and dust cap must be installed in sealable cover (SC) models after concrete has dried.
Note: Nipple length is determined by measuring from the bottom of the threaded portion of the base to the bottom of the cover. Then subtract 2" for clearance, height of adaptor and height of cap. Range of nipple lengths that can be used in all of the OPW spill containers: 4" minimum to 14" maximum.

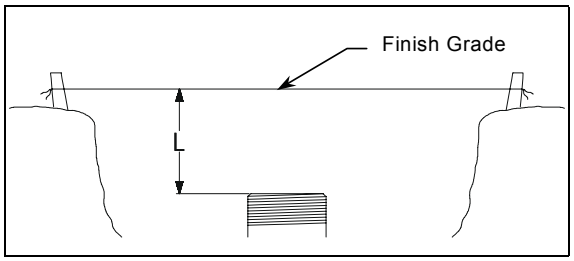

Figure 1

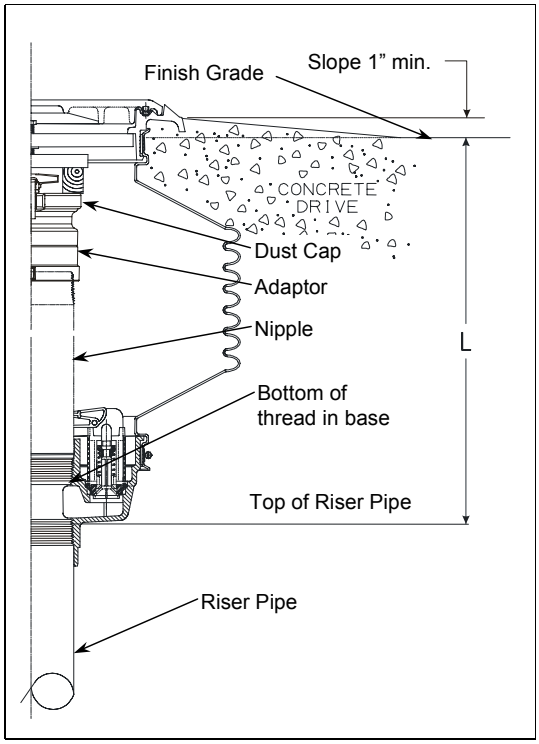

Figure 2

Step 8: (See Figure 3 & 4)
Install adjusting system beneath tabs on mounting ring. See Figure 3 for standard cover models. See Figure 4 for sealable cover models. Add shims as needed and adjust with screw. (Shims must be cut to size for sealable cover models.) The height can be increased up to 1" (2.5cm).
Note: The adjustment should not be more than 1" from the initial length of the unit.

Step 9:
Upon preliminary installation perform the California Test Procedures TP-201.1C or equivalent. Their Test Procedures will check the seals between the drain valve, nipple and rotatable adapter. To test the spill containers base and bellows fill the container with water. A drop in the water level of 1/16" or greater after one hour means that a leak exists. To determine where the leak is, look for a steady stream of bubbles coming from one of the joints or water leaking on the outside of the bucket. **NOTE:** Do not drain the water into the UST after the test is complete. Water must be disposed of per local requirements for hazardous waste. If the leak cannot be corrected the spill container should be replaced with another.

Step 10: (See Figure 2)
Before pouring concrete, place plastic over the cover and mounting ring protecting them from concrete splash. Double check that the unit is level and at proper grade height. Pour concrete per figure 2. Ramp or dome the concrete away from the mounting ring. There should be a minimum of 1" slope to finish grade. The concrete surface should start at the bottom edge of the watershed slots and tapered down to grade level.
NOTE: Do not stand on spill container before concrete sets up.
Remove plastic from cover after concrete has dried. Remove adjustment system. Adaptor and tight fill cap can now be installed in sealable cover models.
Re-test the spill containers for leaks as described in step 9, after the concrete has set up.

Operation and Maintenance:

After each fuel delivery, the operator must remove any standing fuel from the container. Fuel can be removed by actuating the drain valve or with a gasoline absorbing disposable towel.
Annually: Inspect and clean the interior of the spill container and drain valve screen. Remove accumulated dirt and grit. If the drain valve screen becomes clogged, remove the valve, soak in water and use high-pressure air to clean. Reinstall the drain valve to its proper position and test the valve per California Test Procedure TP-201.1C or equivalent. If problems persist, replace the drain valve with P/N 1DK-2100-EVR (specified torque 11.5 ft-lbs min to 13.5 ft-lbs max, 5/16-18 UN thread). The sealable cover (1SC) adjustment nut is set at the factory, but due to environmental conditions it may be necessary to adjust it to either improve sealing or ease cover removal.

Important: Leave these instructions with Station Operator.

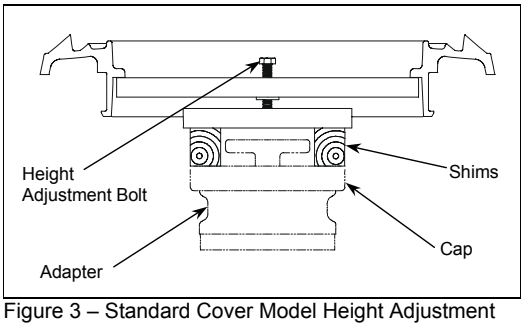

Figure 3 – Standard Cover Model Height Adjustment

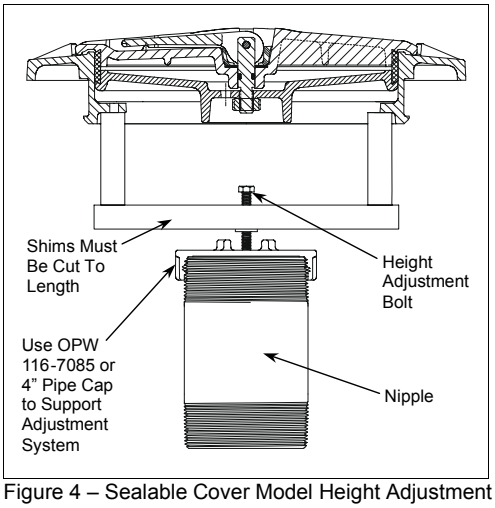

Figure 4 – Sealable Cover Model Height Adjustment

P.O. Box 405003 * Cincinnati, Ohio 45240-5003
1-800-422-2525 Domestically
513-870-3315 Internationally
www.opw-fc.com

Copyright, 2003 - OPW Fueling Components Inc.,
Cincinnati, OH
Printed in U.S.A. p/n H12295PA – 7/03

Figure B-2

Fiberlite FL 36-inch Diameter Sump Configuration Lid

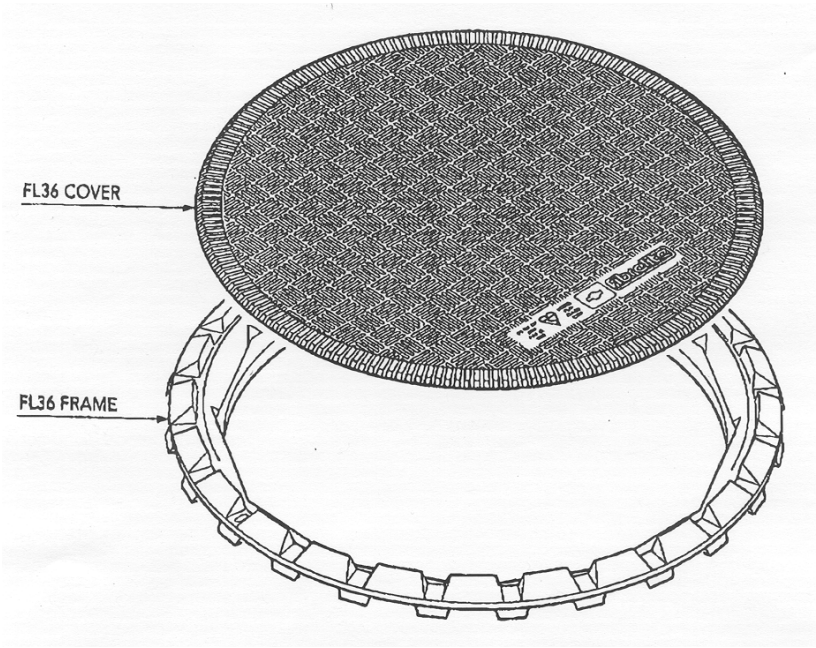

Figure C-1

OPW Installation and Maintenance Instructions

OPW 1DK-2100 EVR Replacement Drain Valve

IMPORTANT: Please read these warnings and use the assembly instructions completely and carefully before starting. Failure to do so may cause product failure, or result in environmental contamination due to liquid leakage into the soil, creating hazardous spill conditions.

IMPORTANT: Check to make sure the unit is intact and undamaged and all parts have been supplied. Never substitute parts for those supplied. Doing so may cause product failure and void warranty.

WARNING-DANGER: Using electrically operated equipment near gasoline or gasoline vapors may result in a fire or explosion, causing personal injury and property damage. Be sure that the working area is free from such hazards, and always use proper precautions.
NOTE: At all times when product is in the storage tank keep the riser pipe capped, so the vapors cannot escape into the environment.

The OPW 1DK is an optional drain valve replacement kit for the OPW 1 Spill containers series. It is designed to return incidental spillage of liquid back to the underground storage tank.

HOW TO INSTALL

1. Remove and discard existing drain valve and O-ring.
2. Clean any dirt or debris from the sealing surface where the new drain valve will be installed.
3. Apply any common grease or light oil to the new supplied O-ring. Assemble the O-ring into the spill container base.
4. Insert the 1DK into the spill container O-ring. Be sure that the drain valve seats flush with the floor of the spill container base.
5. The pull lever of the 1DK MUST be positioned halfway between the riser pipe nipple and the spill container bellows. Rotate the drain valve until that position is attained.
6. Secure the 1DK by installing the provided retaining clips and nuts. Tighten the nuts to a torque of 11.5 ft-lbs min. to 13.5 ft-lbs max.
7. The drain valve is now installed and ready for testing.

HOW TO TEST

Upon preliminary installation perform the California Test Procedures TP-201.1C or equivalent. Their Test Procedures will check the seals between the drain valve, nipple and rotatable adapter. To test the spill containers base and bellows fill the container with water. A drop in the water level of 1/16" or more after one hour means that a leak exists. To determine where the leak is, look for a steady stream of bubbles coming from one of the joints. **NOTE:** Do not drain the water into the UST after the test is complete. Water must be disposed of per local requirements for hazardous waste.

If a leak is observed in the Test Procedure, check to see that the drain valve poppet is sealing properly. To do this, lift up the drain valve pull chain several times to actuate the poppet. This will ensure that the drain valve poppet is seating properly. If this doesn't correct the leak remove the 1DK valve and inspect the O-ring for nicks or tears, replace if needed, also clean the sealing surfaces of the spill container base that the 1DK valve and O-ring are installed into. Reinstall 1DK valve and repeat test.

If spill container passes the Test Procedure but does not hold water then there is a leak in the bucket and will need to be replaced.

Alternative Construction

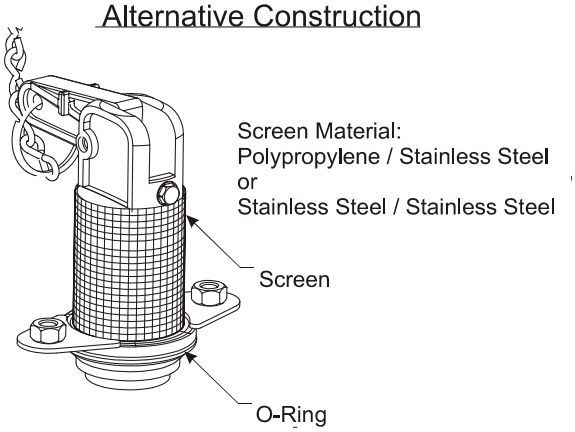

1DK-2100 EVR Replacement Drain Valve Performance Specifications:

This Spill Container drain valve has been manufactured and tested to the following California specifications: Leak Rate to be less than or equal to 0.17 CFH @ 2.0 " W.C.

Operation and Maintenance:

To open, pull drain valve chain up and hold open until liquid is drained. To close, release chain.

Annually: Inspect and clean the interior of the spill container and drain valve screen. Remove accumulated dirt and grit. Test the drain valve using CARB procedure TP-201.1C or TP-201.1D. If the drain valve passes testing no further maintenances required. If the drain valve fail testing, remove the valve, soak in water and use high-pressure air, if needed, to clean. Reinstall the drain valve to its proper position and test the valve with CARB procedure TP-201.1C or TP-201.1D.

Important: Leave these instructions with Station Operator.

Notice: OPW products must be used in compliance with applicable federal, state, and local laws and regulations. Product selection should be based on physical specifications and limitations and compatibility with the environment and material to be handled. OPW makes no warranty of fitness for a particular use. All illustrations and specifications in this literature are based on the latest production information available at the time of publication. Prices, materials, and specification are subject to change at any time, and models may be discontinued at any time, in either case, without notice or obligation.

Standard Product Warranty

OPW warrants that products sold by it are free from defects in materials and workmanship for a period of one year from the date of manufacture by OPW (ECO products two years from date of manufacture.) Proof of purchase may be required. As the exclusive remedy under this limited warranty, OPW, will at its sole discretion, repair, replace, or issue credit for future orders for any product that may prove defective within the one year date of manufacture period (repairs, replacements, or credits may be subject to prorated warranty for remainder of the original warranty period, complete proper warranty claim documentation required.) This warranty shall not apply to any product that has been altered in any way, which has been repaired by any party other than a service representative authorized by OPW, or when failure is due to misuse, or improper installation or maintenance. OPW shall have no liability whatsoever for special, incidental or consequential damages to any party, and shall have no liability for the cost of labor, freight, excavation, clean up, downtime, removal, reinstallation, loss of profit, or any other cost or charges.

For any product certified to California 2001 standards, OPW warrants that product sold by it are free from defects in material and workmanship for a period of one year from date of manufacture or one year from date of registration of installation not to exceed 15 months from date of manufacture by OPW.

THIS WARRANTY IS IN LIEU OF ALL OTHER WARRANTIES, EXPRESS OR IMPLIED, AND SPECIFICALLY THE WARRANTIES OF MERCHANTABILITY AND FITNESS FOR A PARTICULAR PURPOSE. THERE ARE NO WARRANTIES, WHICH EXTEND BEYOND THE DESCRIPTION ON THE FACE HEREOF.

OPW
A DOVER COMPANY

P.O. Box 405003 * Cincinnati, Ohio 45240-5003
1-800-422-2525 Domestically
513-870-3315 Internationally
www.opw-fc.com

Copyright, 2003– OPW Fueling Components Inc., Cincinnati, OH
Printed in U.S.A. p/n H11471PA – 9/03

Figure D-1

OPW 634TT-EVR and 1711T-EVR Dust Caps

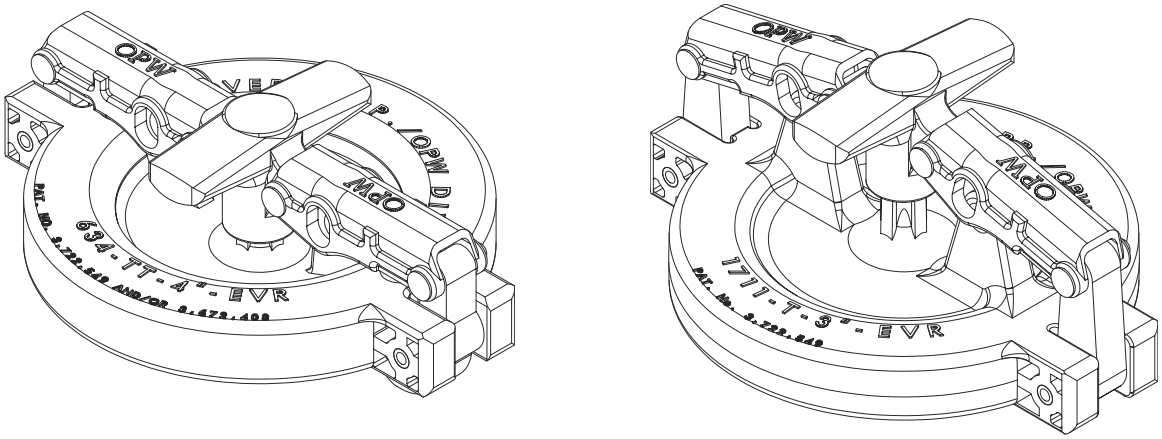

Operation and Maintenance:
Annually inspect seal for nicks, tears or deformations. If required replace with OPW P/N: H15005M for 634TT and H10886M for 1711T.

Standard Product Warranty

OPW warrants that products sold by it are free from defects in materials and workmanship for a period of one year from the date of manufacture by OPW (ECO products two years from date of manufacture.) Proof of purchase may be required. As the exclusive remedy under this limited warranty, OPW, will at its sole discretion, repair, replace, or issue credit for future orders for any product that may prove defective within the one year date of manufacture period (repairs, replacements, or credits may be subject to prorated warranty for remainder of the original warranty period, complete proper warranty claim documentation required.) This warranty shall not apply to any product that has been altered in any way, which has been repaired by any party other than a service representative authorized by OPW, or when failure is due to misuse, or improper installation or maintenance. OPW shall have no liability whatsoever for special, incidental or consequential damages to any party, and shall have no liability for the cost of labor, freight, excavation, clean up, downtime, removal, reinstallation, loss of profit, or any other cost or charges.

For any product certified to California 2001 standards, OPW warrants that product sold by it are free from defects in material and workmanship for a period of one year from date of manufacture or one year from date of registration of installation not to exceed 15 months from date of manufacture by OPW.

THIS WARRANTY IS IN LIEU OF ALL OTHER WARRANTIES, EXPRESS OR IMPLIED, AND SPECIFICALLY THE WARRANTIES OF MERCHANTABILITY AND FITNESS FOR A PARTICULAR PURPOSE. THERE ARE NO WARRANTIES, WHICH EXTEND BEYOND THE DESCRIPTION ON THE FACE HEREOF.

OPW
A DOVER COMPANY

P.O. Box 405003 * Cincinnati, Ohio 45240-5003
1-800-422-2525 Domestically
513-870-3315 Internationally
www.opw-fc.com

Figure D-2

OPW 634LPC and 1711LPC Dust Caps

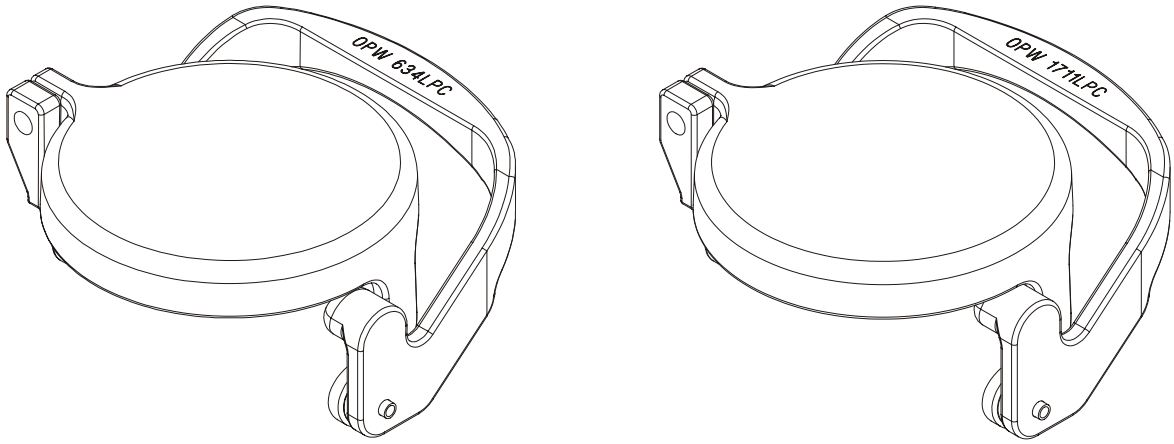

Operation and Maintenance:
Annually inspect seal for nicks, tears or deformations. If required replace with OPW P/N: H15005M.

Standard Product Warranty

OPW warrants that products sold by it are free from defects in materials and workmanship for a period of one year from the date of manufacture by OPW (ECO products two years from date of manufacture.) Proof of purchase may be required. As the exclusive remedy under this limited warranty, OPW, will at its sole discretion, repair, replace, or issue credit for future orders for any product that may prove defective within the one year date of manufacture period (repairs, replacements, or credits may be subject to prorated warranty for remainder of the original warranty period, complete proper warranty claim documentation required.) This warranty shall not apply to any product that has been altered in any way, which has been repaired by any party other than a service representative authorized by OPW, or when failure is due to misuse, or improper installation or maintenance. OPW shall have no liability whatsoever for special, incidental or consequential damages to any party, and shall have no liability for the cost of labor, freight, excavation, clean up, downtime, removal, reinstallation, loss of profit, or any other cost or charges.

For any product certified to California 2001 standards, OPW warrants that product sold by it are free from defects in material and workmanship for a period of one year from date of manufacture or one year from date of registration of installation not to exceed 15 months from date of manufacture by OPW.

THIS WARRANTY IS IN LIEU OF ALL OTHER WARRANTIES, EXPRESS OR IMPLIED, AND SPECIFICALLY THE WARRANTIES OF MERCHANTABILITY AND FITNESS FOR A PARTICULAR PURPOSE. THERE ARE NO WARRANTIES, WHICH EXTEND BEYOND THE DESCRIPTION ON THE FACE HEREOF.

OPW
A DOVER COMPANY

P.O. Box 405003 * Cincinnati, Ohio 45240-5003
1-800-422-2525 Domestically
513-870-3315 Internationally
www.opw-fc.com

Figure E-1

OPW Installation and Maintenance Instructions

OPW 61SALP EVR (Low Profile) Rotatable Product Adaptors

IMPORTANT: Please read these warnings and use the assembly instructions completely and carefully before starting. Failure to do so may cause product failure, or result in environmental contamination due to liquid leakage into the soil, creating hazardous spill conditions.

IMPORTANT: Check to make sure the unit is intact and undamaged and all parts have been supplied. Never substitute parts for those supplied. Doing so may cause product failure.

WARNING-DANGER: Using electrically operated equipment near gasoline or gasoline vapors may result in a fire or explosion, causing personal injury and property damage. Be sure that the working area is free from such hazards, and always use proper precautions.
NOTE: At all times when product is in the storage tank keep the riser pipe capped, so the vapors cannot escape into the environment.

Notice: OPW products must be used in compliance with applicable federal, state, and local laws and regulations. Product selection should be based on physical specifications and limitations and compatibility with the environment and material to be handled. All illustrations and specifications in this literature are based on the latest production information available at the time of publication. Prices, materials, and specification are subject to change at any time, and models may be discontinued at any time, in either case, without notice or obligation.

Standard Product Warranty

OPW warrants that products sold by it are free from defects in materials and workmanship for a period of one year from the date of manufacture by OPW (ECO products two years from date of manufacture.) Proof of purchase may be required. As the exclusive remedy under this limited warranty, OPW, will at its sole discretion, repair, replace, or issue credit for future orders for any product that may prove defective within the one year date of manufacture period (repairs, replacements, or credits may be subject to prorated warranty for remainder of the original warranty period, complete proper warranty claim documentation required.) This warranty shall not apply to any product that has been altered in any way, which has been repaired by any party other than a service representative authorized by OPW, or when failure is due to misuse, or improper installation or maintenance. OPW shall have no liability whatsoever for special, incidental or consequential damages to any party, and shall have no liability for the cost of labor, freight, excavation, clean up, downtime, removal, reinstallation, loss of profit, or any other cost or charges.

For any product certified to California 2001 standards, OPW warrants that product sold by it are free from defects in material and workmanship for a period of one year from date of manufacture or one year from date of registration of installation not to exceed 15 months from date of manufacture by OPW.

THIS WARRANTY IS IN LIEU OF ALL OTHER WARRANTIES, EXPRESS OR IMPLIED, AND SPECIFICALLY THE WARRANTIES OF MERCHANTABILITY AND FITNESS FOR A PARTICULAR PURPOSE. THERE ARE NO WARRANTIES, WHICH EXTEND BEYOND THE DESCRIPTION ON THE FACE HEREOF.

61SALP Performance Specifications:
This Rotatable Adaptor has been manufactured and tested to the following California Specifications: Rotatable 360°, Static Torque maximum 108 inch-lbs.

Preventative Maintenance:
Annually, inspect the adaptor for large dents, cracks or deformation. Replace if necessary. The rotation mechanism is not field serviceable.

Replacement Parts:
Nipple sealing gasket OPW P/N: H09039M.

Torque Specification:
Adapter, 4" NPSM, 90 ft-lbs minimum to 110 ft-lbs maximum.

Important: Leave these Installation Instructions with the Station Operator.

61SALP EVR Rotatable Product Adaptor
INSTALLATION INSTRUCTIONS

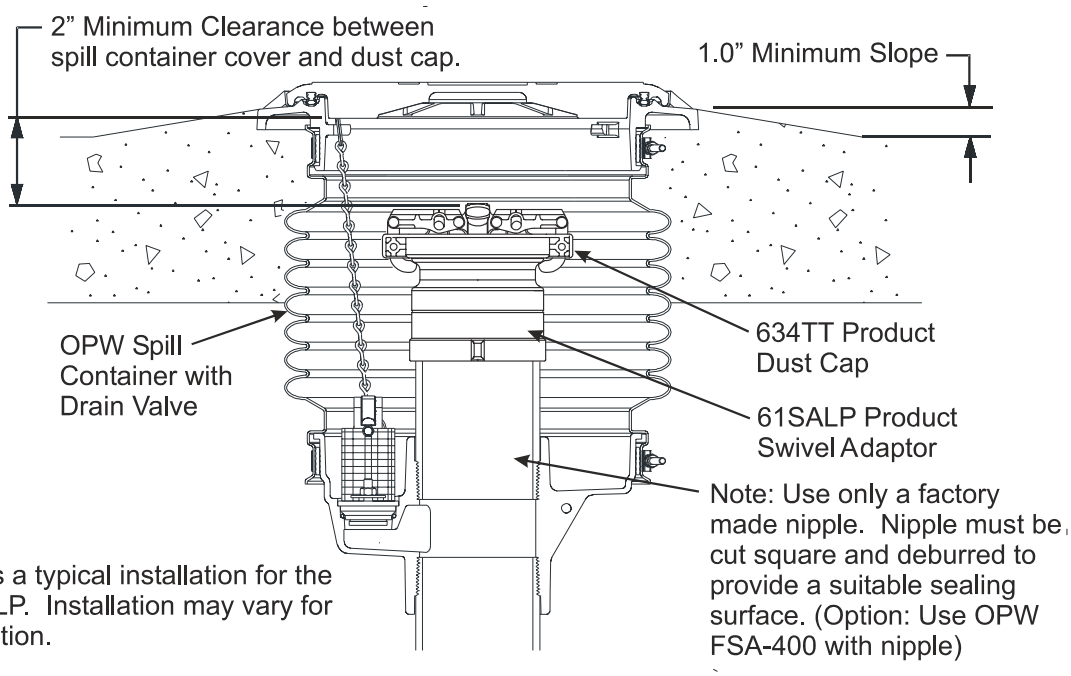

Note: This is a typical installation for the OPW 61SALP. Installation may vary for your application.

Step 1
The riser nipple in the spill container must be cut square and deburred. See drawing note for the correct distance between the top of the nipple and finished grade. (Optional: Use a OPW FSA-400 Face Seal Adapter with nipple. Add 3-1/4” to distance from top of nipple to finish grade).

Step 2 (Optional)
Apply pipe dope to the nipple. Pipe dope to be non-hardening, gasoline resistant pipe thread seal compound.

Step 3
Tighten the Rotatable Adaptor onto the nipple with a torque of 90 ft-lbs min. to 110 ft-lbs max this will be enough torque to seat and seal the gasket. Use an OPW 61SA-TOOL to install rotatable adaptor.

A DOVER COMPANY

P.O. Box 405003 * Cincinnati, Ohio 45240-5003
1-800-422-2525 Domestically
513-870-3315 Internationally
www.opw-fc.com

Copyright, 2004 - OPW Fueling Components Inc., Cincinnati, OH
Printed in U.S.A. p/n H12712PA- 8/04

Figure F-1

OPW Installation and Maintenance Instructions

OPW 61VSA EVR Poppetted Rotatable Vapor Recovery Adaptor

IMPORTANT: Please read these warnings and use the assembly instructions completely and carefully before starting. Failure to do so may cause product failure, or result in environmental contamination due to liquid leakage into the soil, creating hazardous spill conditions.

IMPORTANT: Check to make sure the unit is intact and undamaged and all parts have been supplied. Never substitute parts for those supplied. Doing so may cause product failure.

WARNING-DANGER: Using electrically operated equipment near gasoline or gasoline vapors may result in a fire or explosion, causing personal injury and property damage. Be sure that the working area is free from such hazards, and always use proper precautions.
NOTE: At all times when product is in the storage tank keep the riser pipe capped, so the vapors cannot escape into the environment.

Notice: OPW products must be used in compliance with applicable federal, state, and local laws and regulations. Product selection should be based on physical specifications and limitations and compatibility with the environment and material to be handled. All illustrations and specifications in this literature are based on the latest production information available at the time of publication. Prices, materials, and specification are subject to change at any time, and models may be discontinued at any time, in either case, without notice or obligation.

Standard Product Warranty

OPW warrants that products sold by it are free from defects in materials and workmanship for a period of one year from the date of manufacture by OPW (ECO products two years from date of manufacture.) Proof of purchase may be required. As the exclusive remedy under this limited warranty, OPW, will at its sole discretion, repair, replace, or issue credit for future orders for any product that may prove defective within the one year date of manufacture period (repairs, replacements, or credits may be subject to prorated warranty for remainder of the original warranty period, complete proper warranty claim documentation required.) This warranty shall not apply to any product that has been altered in any way, which has been repaired by any party other than a service representative authorized by OPW, or when failure is due to misuse, or improper installation or maintenance. OPW shall have no liability whatsoever for special, incidental or consequential damages to any party, and shall have no liability for the cost of labor, freight, excavation, clean up, downtime, removal, reinstallation, loss of profit, or any other cost or charges.

For any product certified to California 2001 standards, OPW warrants that product sold by it are free from defects in material and workmanship for a period of one year from date of manufacture or one year from date of registration of installation not to exceed 15 months from date of manufacture by OPW.

THIS WARRANTY IS IN LIEU OF ALL OTHER WARRANTIES, EXPRESS OR IMPLIED, AND SPECIFICALLY THE WARRANTIES OF MERCHANTABILITY AND FITNESS FOR A PARTICULAR PURPOSE. THERE ARE NO WARRANTIES, WHICH EXTEND BEYOND THE DESCRIPTION ON THE FACE HEREOF.

61VSA Performance Specifications:
This Rotatable Adaptor has been manufactured and tested to the following California specifications: Rotatable 360°, Static torque of 108 inch-lbs.

Preventative Maintenance:
Annually, inspect the adaptor for large dents, cracks or deformation. Replace if necessary. The rotation mechanism is not field serviceable.

Check the vapor poppet for damage and ensure that the poppet seats evenly with the adaptor. Clean out any foreign objects from the vapor poppet's seal and seal surface if necessary. Test the poppet seal by applying a soap solution to the poppet while the underground storage tank is under a positive gauge pressure of at least 2.00 inches W.C and inspect for the presence of bubbles. If the facility continuously operates under vacuum, a bag test may be used by sealing a clear plastic bag to the adaptor's sides. If no bubbles appear at the poppet under positive pressure or the bag test shows no signs of the bag collapsing, no further maintenance is required. If bubbles appeared around the poppet seal or the bag collapsed, replace the poppet components and re-test

Replacement Parts:
Nipple sealing gasket OPW P/N: H09039M.
Vapor Poppet Kit OPW P/N: 61VSA-Kit

Torque Specification:
Adaptor, 4" NPSM, 90 ft-lbs minimum to 110 ft-lbs maximum.

Important: Leave these Installation Instructions with the Station Operator.

OPW 61VSA EVR Series Poppetted Rotatable Vapor Adaptor
INSTALLATION INSTRUCTIONS

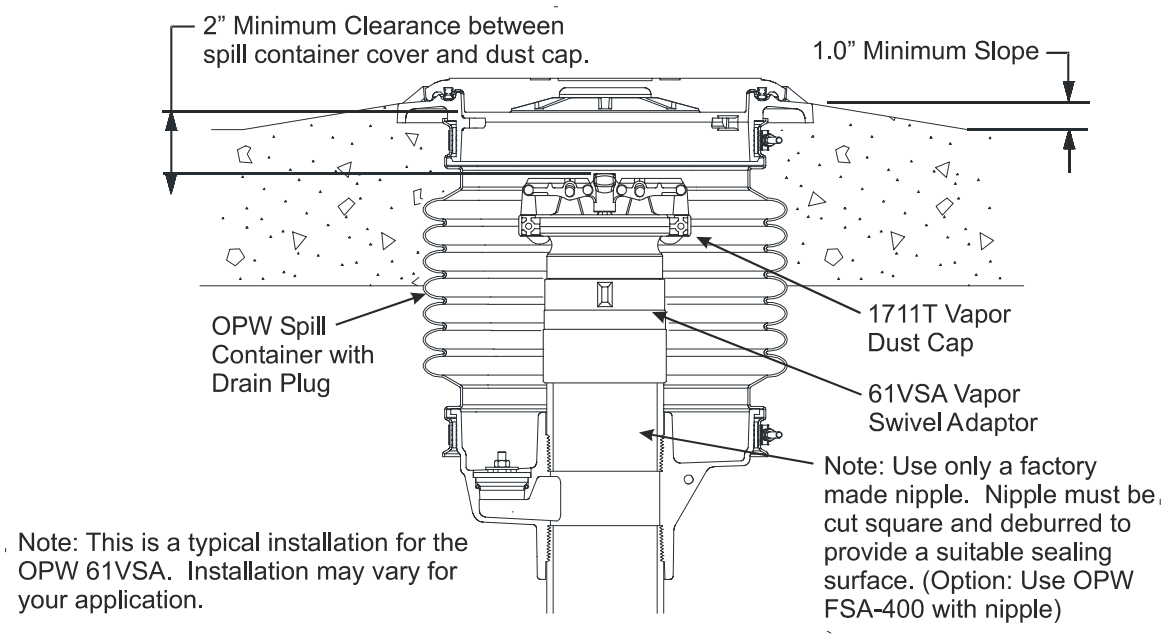

Step 1
The riser nipple in the spill container must be cut square and deburred. See drawing note for the correct distance between the top of the nipple and finished grade. (Optional: Use an OPW FSA-400 Face Seal Adaptor with nipple. Add 3-1/4” to distance from top of nipple to finish grade).

Step 2 (Optional)
Apply pipe dope to the nipple. Pipe dope to be non-hardening, gasoline resistant pipe thread seal compound.

Step 3
Tighten the Rotatable Adaptor onto the nipple with a torque of 90 ft-lbs min. to 110 ft-lbs max, this will be enough torque to seat and seal the gasket. Use a 61SA-TOOL to install rotatable adaptor.

OPW
A DOVER COMPANY

P.O. Box 405003 * Cincinnati, Ohio 45240-5003
1-800-422-2525 Domestically
513-870-3315 Internationally
www.opw-fc.com

Copyright, 2004- OPW Fueling Components Inc., Cincinnati, OH
Printed in U.S.A. p/n H14656PA- 08/04

Figure G-1

OPW Installation and Maintenance Instructions

53VML / 30MV SERIES BALL FLOATS AND 233 SERIES EXTRACTOR ASSEMBLIES

IMPORTANT: Please read these warnings and use the assembly instructions completely and carefully before starting. Failure to do so may cause product failure, or result in environmental contamination due to liquid leakage into the soil, creating hazardous spill conditions.

IMPORTANT: Check to make sure the unit is intact and undamaged and all parts have been supplied. Never substitute parts for those supplied. Doing so may cause product failure and void warranty.

WARNING-DANGER: Using electrically operated equipment near gasoline or gasoline vapors may result in a fire or explosion, causing personal injury and property damage. Be sure that the working area is free from such hazards, and always use proper precautions.
NOTE: At all times when product is in the storage tank keep the riser pipe capped, so the vapors cannot escape into the environment.

Notice: OPW products must be used in compliance with applicable federal, state, and local laws and regulations. Product selection should be based on physical specifications and limitations and compatibility with the environment and material to be handled. All illustrations and specifications in this literature are based on the latest production information available at the time of publication. Prices, materials, and specification are subject to change at any time, and models may be discontinued at any time, in either case, without notice or obligation.

WARNING: OPW Overfill Warning Systems should only be used on submerged pumping systems, and not with suction pump systems. OPW Overfill Warning Systems should only be used on gravity drop systems. DO NOT use where Pump Off Unloading is used

IMPORTANT: Installing the incorrect length OPW 53VML or 30MV Ball Float Vent Valve for your specific application may result in delivery flow restriction at tank levels exceeding requirements established by the U.S. EPA. Always consult the appropriate tank charts and determine the specifics of your tank installation to determine the appropriate length OPW 53VML or 30MV to be installed. The illustration and instructions on the back of this sheet are intended to serve as a guide in this determination.

Field Installation Instructions

1. Apply a non-hardening, gasoline resistant pipe compound on the ball float nipple threads. Install the extractor cage-assembly onto the ball float nipple. Torques for, 3"NPT thread, 125 ft-lbs min. to 200 ft-lbs max, 2"NPT thread, 100 ft-lbs min. to 150 ft-lbs max. **DO NOT USE TEFLON TAPE**
2. Thread the 233 Series OPW Extractor Fitting into the tank bung fitting. Torque for, 4"NPT thread, 125" ft-lbs min. to 250 ft-lbs max. Thread the Ball Float and cage assembly into the 233 extractor fitting using the OPW 89 Extractor Wrench. Torque for, 3 3/4-8 thread, 75 ft-lbs min. to 150 ft-lbs max.
3. Make sure Ball Float moves freely, full stroke, without binding.
4. **Preventative Maintenance** - Every three years, remove and inspect the valve for damage, contamination, corrosion, freedom of movement of the ball float, and check the bleeder orifice for proper airflow. Replace if damaged or corroded.

Important: Leave these instructions with Station Operator.

Standard Product Warranty: OPW warrants that products sold by it are free from defects in materials and workmanship for a period of one year from the date of manufacture by OPW (ECO products two years from date of manufacture.) Proof of purchase may be required. As the exclusive remedy under this limited warranty, OPW, will at its sole discretion, repair, replace, or issue credit for future orders for any product that may prove defective within the one year date of manufacture period (repairs, replacements, or credits may be subject to prorated warranty for remainder of the original warranty period, complete proper warranty claim documentation required.) This warranty shall not apply to any product that has been altered in any way, which has been repaired by any party other than a service representative authorized by OPW, or when failure is due to misuse, or improper installation or maintenance. OPW shall have no liability whatsoever for special, incidental or consequential damages to any party, and shall have no liability for the cost of labor, freight, excavation, clean up, downtime, removal, reinstallation, loss of profit, or any other cost or charges.

For any product certified to California 2001 standards, OPW warrants that product sold by it are free from defects in material and workmanship for a period of one year from date of manufacture or one year from date of registration of installation not to exceed 15 months from date of manufacture by OPW.

THIS WARRANTY IS IN LIEU OF ALL OTHER WARRANTIES, EXPRESS OR IMPLIED, AND SPECIFICALLY THE WARRANTIES OF MERCHANTABILITY AND FITNESS FOR A PARTICULAR PURPOSE. THERE ARE NO WARRANTIES, WHICH EXTEND BEYOND THE DESCRIPTION ON THE FACE HEREOF.

IMPORTANT: The figures in this installation and maintenance instruction may contain vapor recovery equipment (including model numbers) that is not certified by the California Air Resources Board (CARB) for a specific Phase I Vapor Recovery System. Please refer to Exhibit 1 of the appropriate CARB Phase I Executive Order for a list of certified Phase I Vapor Recovery System Equipment.

Specifying OPW 53VML AND 30MV Ball Float Vent Valves

IMPORTANT: Dimensions are for installations without Overfill Prevention Drop Tubes. See Drop Tube installation for reference on those installations.

Specifying the Proper Length 53VML Series Ball Float

Step 1: Determine Dimension "X": Consult the tank chart (provided by the tank manufacturer) to determine the distance that corresponds to 10% of the total tank capacity

Step 2: Determine Dimension "Y": Measure the dimension from the inside top of the tank to the top of the 4" threaded tank "bung" fitting.

Step 3: Add measurements "X" and "Y". Then subtract 1/4"and round up to the nearest length ball float.

Specifying the Proper Length 30MV Series Ball Float

Step 1: Determine Dimension "X": Consult the tank chart (provided by the tank manufacturer) to determine the distance that corresponds to 308 gallons.

Step 2: Determine Dimension "Y": Measure the dimension from the inside top of the tank to the top of the 4" threaded tank "bung" fitting.

Step 3: Add measurements "X" and "Y". Then subtract 1/4 " and round up to the nearest length ball float.

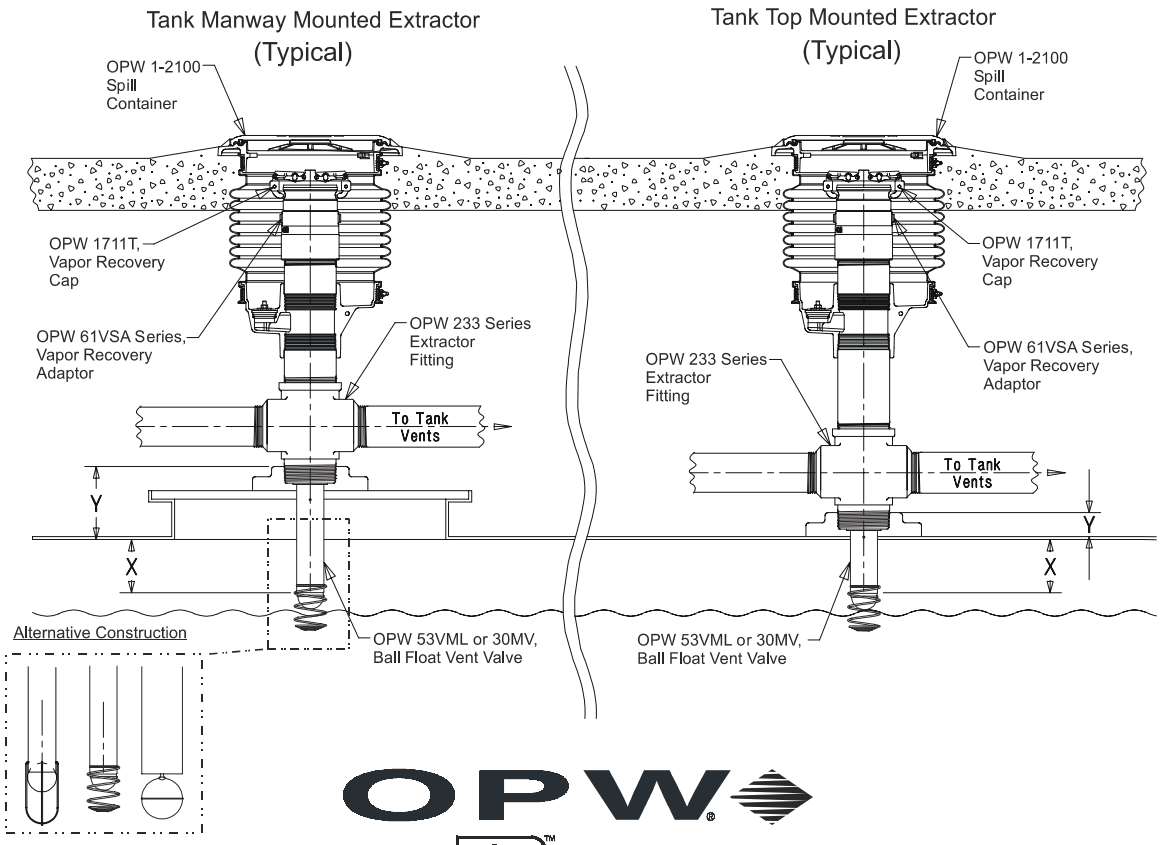

A DOVER COMPANY

P.O. Box 405003 * Cincinnati, Ohio 45240-5003
1-800-422-2525 Domestically
513-870-3315 Internationally
www.opw-fc.com

Copyright, 2003- OPW Fueling Components Inc., Cincinnati, OH
Printed in U.S.A. p/n H14111PA (9/ 03)

Figure H-1

OPW Installation and Maintenance Instructions

OPW 61JSK-4410 and 61JSK-44CB Jack Screw Kit

IMPORTANT: Please read these warnings and assembly instructions completely and carefully before starting. Failure to do so may cause product failure, or result in environmental contamination due to liquid leakage into the soil, creating hazardous spill conditions.

IMPORTANT: Check to make sure the product is intact and undamaged and all parts have been supplied. Never substitute parts for those supplied. Doing so may cause product failure.

WARNING-DANGER: Using electrically operated equipment near gasoline or gasoline vapors may result in a fire or explosion, causing personal injury and property damage. Be sure that the working area is free from such hazards, and always use proper precautions.
NOTE: At all times when product is in the storage tank keep the riser pipe capped, so the vapors cannot escape into the environment.

Notice: OPW products must be used in compliance with applicable federal, state, and local laws and regulations. Product selection should be based on physical specifications and limitations and compatibility with the environment and material to be handled. All illustrations and specifications in this literature are based on the latest production information available at the time of publication. Prices, materials, and specification are subject to change at any time, and models may be discontinued at any time, in either case, without notice or obligation.

Standard Product Warranty

OPW warrants that products sold by it are free from defects in materials and workmanship for a period of one year from the date of manufacture by OPW (ECO products two years from date of manufacture.) Proof of purchase may be required. As the exclusive remedy under this limited warranty, OPW, will at its sole discretion, repair, replace, or issue credit for future orders for any product that may prove defective within the one year date of manufacture period (repairs, replacements, or credits may be subject to prorated warranty for remainder of the original warranty period, complete proper warranty claim documentation required.) This warranty shall not apply to any product that has been altered in any way, which has been repaired by any party other than a service representative authorized by OPW, or when failure is due to misuse, or improper installation or maintenance. OPW shall have no liability whatsoever for special, incidental or consequential damages to any party, and shall have no liability for the cost of labor, freight, excavation, clean up, downtime, removal, reinstallation, loss of profit, or any other cost or charges.

For any product certified to California 2001 standards, OPW warrants that product sold by it are free from defects in material and workmanship for a period of one year from date of manufacture or one year from date of registration of installation not to exceed 15 months from date of manufacture by OPW.

THIS WARRANTY IS IN LIEU OF ALL OTHER WARRANTIES, EXPRESS OR IMPLIED, AND SPECIFICALLY THE WARRANTIES OF MERCHANTABILITY AND FITNESS FOR A PARTICULAR PURPOSE. THERE ARE NO WARRANTIES, WHICH EXTEND BEYOND THE DESCRIPTION ON THE FACE HEREOF.

61JSK Performance Specifications:

This OPW Jack Screw Kit is designed to lock an OPW 61SO Series Overfill Valve or 61T Drop Tube into an OPW 1-2100 (or Multi-Port 500) Series Spill Container Base below the outlet of the drain valve.

Torque Specification:
5/16-18 Screw, 3.5 ft-lbs (42 in-lbs) minimum to 5.0 ft-lbs (60 in-lbs) maximum.

4" Nipple, 125 ft-lbs minimum to 250 ft-lbs maximum.

4” NPT Thread, 125 ft-lbs minimum to 250 ft-lbs maximum.

IMPORTANT: The figures in this installation and maintenance instruction may contain vapor recovery equipment (including model numbers) that is not certified by the California Air Resources Board (CARB) for a specific Phase I Vapor Recovery System. Please refer to Exhibit 1 of the appropriate CARB Phase I Executive Order for a list of certified Phase I Vapor Recovery System Equipment.

OPW 61JSK-4410 JACK SCREW KIT FOR COMPOSITE BASE SPILL CONTAINERS INSTALLATION INSTRUCTIONS:

Figure numbers correspond to step numbers for easy reference.

Step 1

Remove any old or dried pipe dope and metal burrs from top of riser pipe. Apply a gasoline resistant pipe dope on the threads of an OPW FSA-400 Face Seal Adapter and install onto the riser pipe. Torque to 125 ft-lbs min. to 250 ft-lbs max using the OPW 61SA-TOOL.

Step 2:

Install the OPW 1-2100 or POMECO 500 Series Spill Container in accordance with the OPW Installation Instructions supplied with the product.

Step 3: (See Figure 3 & 3A)

Assemble and Install the OPW Drop Tube in accordance with the OPW Installation Instructions supplied with the product.

Step 4: (See Figure 4)

Insert the Jack Screw Lower Cage completely into the spill container base on top of the drop tube flange with the screw pockets facing up.

Step 5: (See Figure 5)

Assemble screws into upper plate with the step facing up. Adjust the screws so that the top plate will be located just below the bottom of the threads in the spill container base when the assembly is inserted into the spill container.

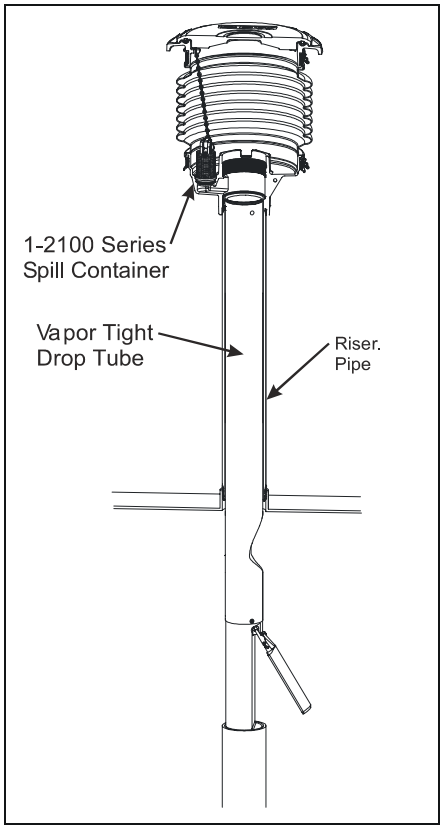

Figure 3a

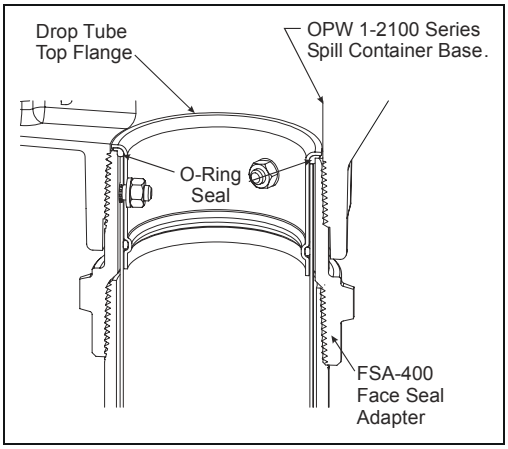

Figure 3

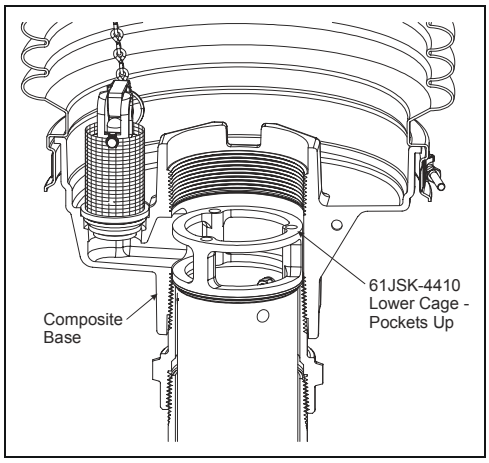

Figure 4

Step 6: (See Figure 5)
Install the Jack Screw Assembly into the spill container base. Make sure the bottoms of the three screws are seated in the pockets on the Jack Screw Lower Cage. Apply the supplied thread locker to the threads above the top plate on all three screws on the Jack Screw Top Assembly.

Step 7:
Apply a gasoline resistant pipe dope on the threads of a 4" nipple. Install the 4" nipple into the spill container and tighten securely. (Recommended torque, 4"NPT, 125 ft-lbs min. to 250 ft-lbs max.)
Note: The top plate should not be in contact with the nipple at this point. If the nipple hits the top plate while being tightened lower the top plate on the Jack Screw below the threads on the spill container.

Step 8: (See Figure 8)
Using a ¼ inch Allen socket, alternately and evenly tighten the three (3) screws on the Jack Screw Assembly until the top plate contacts the bottom of the 4" nipple. Check to make sure the step in the top plate is centered in the nipple. Tighten the three (3) screws evenly and securely with a torque of 3.5 ft-lbs min. to 5.0 ft-lbs max to ensure that the drop tube flange is sealed securely to the Face Seal Adapter.

Step 9: (See figure 9)
Assembly of the Jack Screw Kit is now complete. Proceed to installation of the OPW 61SALP-EVR Rotatable Product Adaptor and OPW 634TT Cap in accordance with the OPW Installation Instructions supplied with the product.

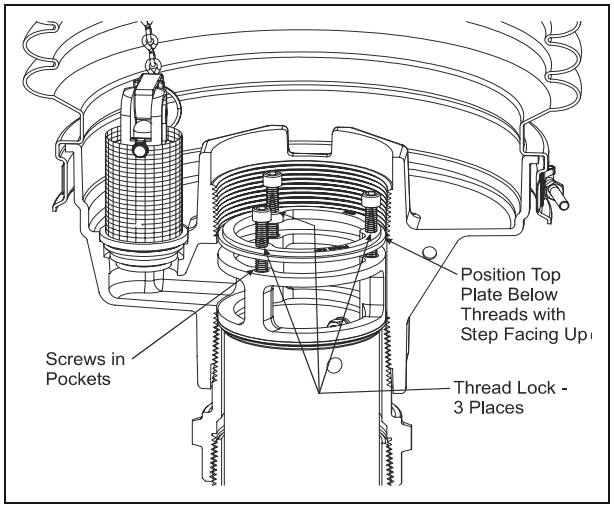

Figure 5

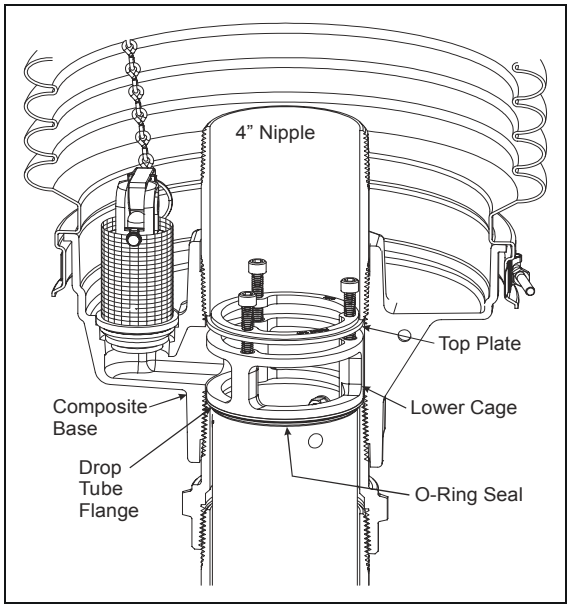

Figure 8

OPW 61JSK-44CB JACK SCREW KIT FOR CAST IRON BASE SPILL CONTAINERS
INSTALLATION INSTRUCTIONS:
Figure numbers correspond to step numbers for easy reference.
Step 1
Remove any old or dried pipe dope and metal burrs from top of riser pipe. Apply a gasoline resistant pipe dope on the threads of an OPW FSA-400 or FSA-400-S Face Seal Adapter and install onto the riser pipe. Torque to 125 ft-lbs min. to 250 ft-lbs max using the OPW 61SA-TOOL.
Note: Only the cast iron base will work with the FSA-400-S (Short Face Seal Adapter).

Step 2:
Install the OPW 1-2100 or POMECO 500 Series Spill Container in accordance with the OPW Installation Instructions supplied with the product.

Step 3: (See Figure 3 & 3A)
Assemble and Install the OPW Drop Tube in accordance with the OPW Installation Instructions supplied with the product.

Step 4: (See Figure 4)
Insert the Jack Screw Lower Plate (plate without threads) completely into the spill container base on top of the drop tube flange with the screw pockets facing up.

Step 5: (See Figure 5)
Assemble screws into upper plate with the step facing up. Adjust the screws so that the top plate will be located just below the bottom of the threads in the spill container base when the assembly is inserted into the spill container.

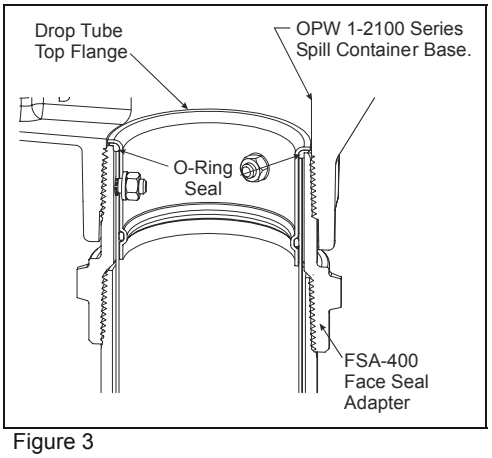

Figure 3

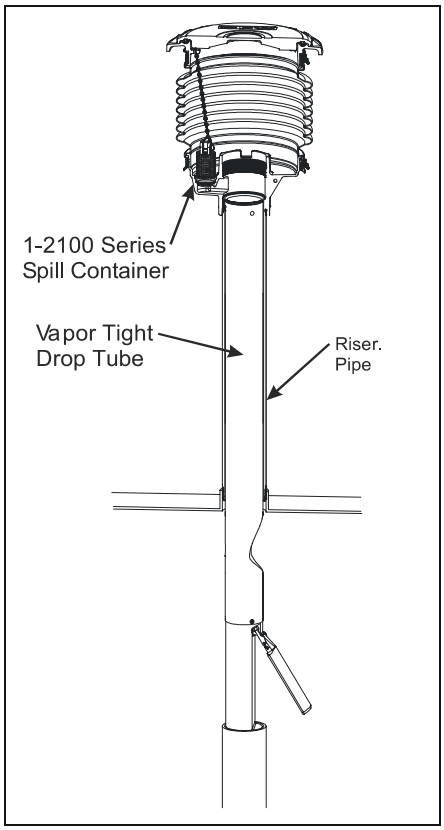

Figure 3a

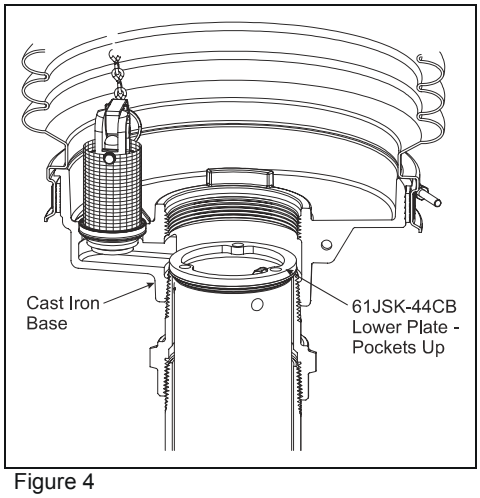

Figure 4

Step 6: (See Figure 5)
Install the Jack Screw Assembly into the spill container base. Make sure the bottoms of the three screws are seated in the pockets on the Jack Screw Lower Plate. Apply the supplied thread locker to the threads above the top plate on all three screws on the Jack Screw Top Assembly.

Step 7:
Apply a gasoline resistant pipe dope on the threads of a 4" nipple. Install the 4" nipple into the spill container and tighten securely. (Recommended torque, 4"NPT, 125 ft-lbs min. to 250 ft-lbs max.)
Note: The top plate should not be in contact with the nipple at this point. If the nipple hits the top plate while being tightened lower the top plate on the Jack Screw below the threads on the spill container.

Step 8: (See Figure 8)
Using a ¼ inch Allen socket, alternately and evenly tighten the three (3) screws on the Jack Screw Assembly until the top plate contacts the bottom of the 4" nipple. Check to make sure the step in the top plate is centered in the nipple. Tighten the three (3) screws evenly and securely with a torque of 3.5 ft-lbs min. to 5.0 ft-lbs max to ensure that the drop tube flange is sealed securely to the Face Seal Adapter.

Step 9: (See figure 9)
Assembly of the Jack Screw Kit is now complete. Proceed to installation of the OPW 61SALP-EVR Rotatable Product Adaptor and OPW 634TT Cap in accordance with the OPW Installation Instructions supplied with the product.

Operation and Maintenance:

If a leak develops at the drop tube, re-torque the (3) screws on the Jack Screw. (Torque value: 3.5 ft-lbs min. to 5.0 ft-lbs max.) If this does not correct the leak, check for burrs, clean the sealing surface on the FSA-400 and replace the o-ring on the drop tube. NOTE: Loctite 242, thread locker, must be reapplied each time the screws are adjusted.

Important: Leave these instructions with Station Operator.

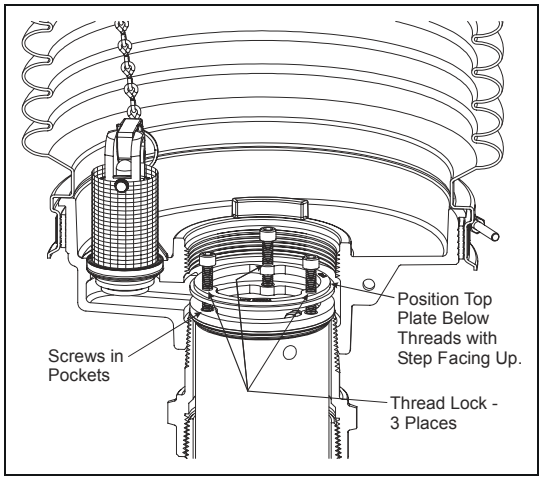

Figure 5

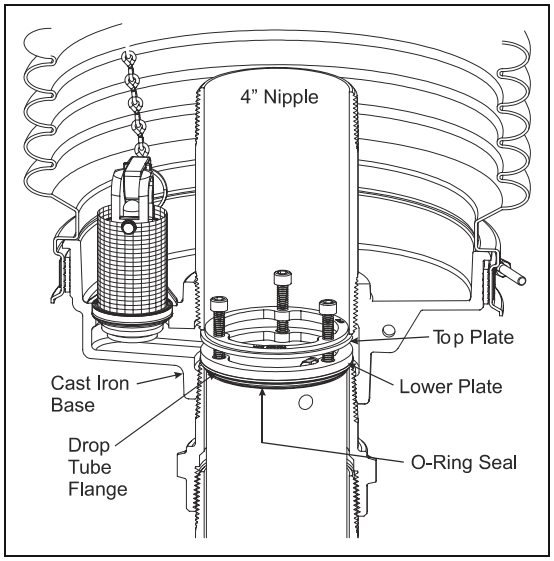

Figure 8

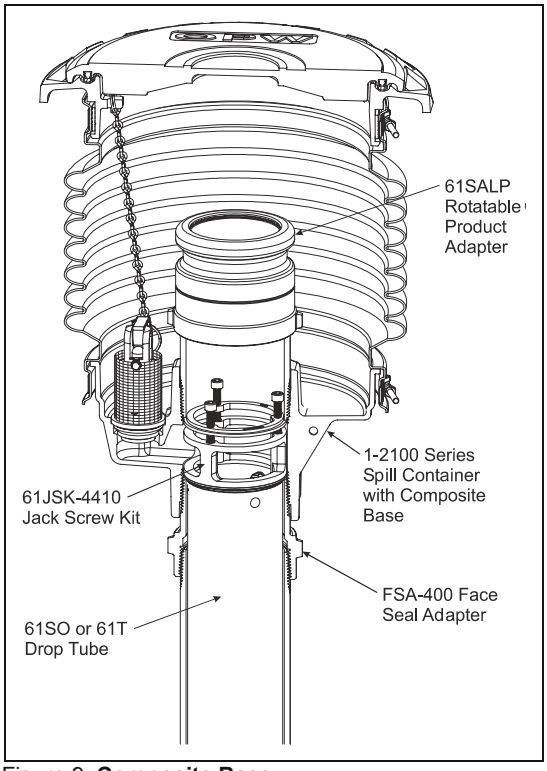

Figure 9 **Composite Base**

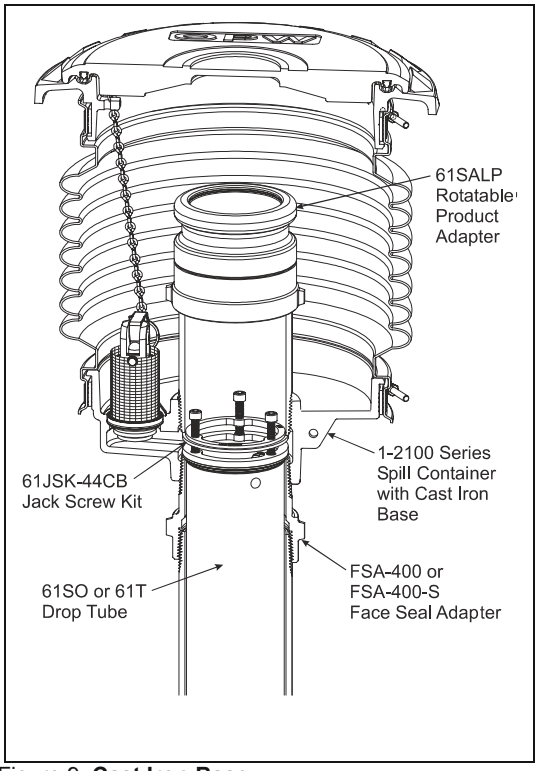

Figure 9 **Cast Iron Base**

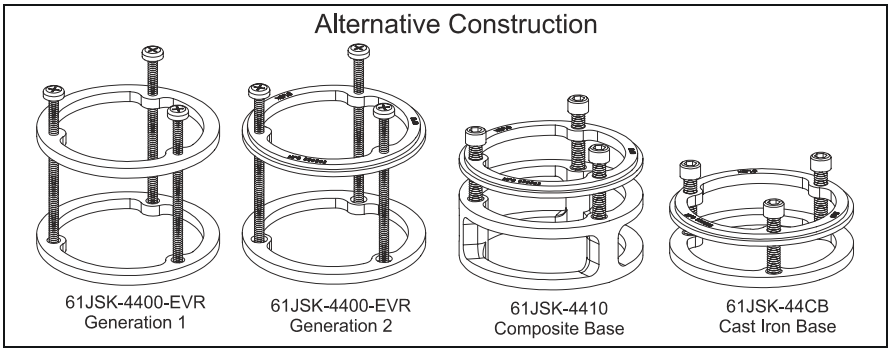

P.O. Box 405003 * Cincinnati, Ohio 45240-5003
1-800-422-2525 Domestically
513-870-3315 Internationally
www.opw-fc.com
Copyright, 2004 - OPW Fueling Components Inc., Cincinnati, OH
Printed in U.S.A. p/n H15289PA – 4/04

Figure H-2

OPW Installation and Maintenance Instructions

OPW 61JSK-4400 Jack Screw Kit

IMPORTANT: Please read these warnings and assembly instructions completely and carefully before starting. Failure to do so may cause product failure, or result in environmental contamination due to liquid leakage into the soil, creating hazardous spill conditions.

IMPORTANT: Check to make sure the product is intact and undamaged and all parts have been supplied. Never substitute parts for those supplied. Doing so may cause product failure.

WARNING-DANGER: Using electrically operated equipment near gasoline or gasoline vapors may result in a fire or explosion, causing personal injury and property damage. Be sure that the working area is free from such hazards, and always use proper precautions.
NOTE: At all times when product is in the storage tank keep the riser pipe capped, so the vapors cannot escape into the environment.

Notice: OPW products must be used in compliance with applicable federal, state, and local laws and regulations. Product selection should be based on physical specifications and limitations and compatibility with the environment and material to be handled. All illustrations and specifications in this literature are based on the latest production information available at the time of publication. Prices, materials, and specification are subject to change at any time, and models may be discontinued at any time, in either case, without notice or obligation.

Standard Product Warranty

OPW warrants that products sold by it are free from defects in materials and workmanship for a period of one year from the date of manufacture by OPW (ECO products two years from date of manufacture.) Proof of purchase may be required. As the exclusive remedy under this limited warranty, OPW, will at its sole discretion, repair, replace, or issue credit for future orders for any product that may prove defective within the one year date of manufacture period (repairs, replacements, or credits may be subject to prorated warranty for remainder of the original warranty period, complete proper warranty claim documentation required.) This warranty shall not apply to any product that has been altered in any way, which has been repaired by any party other than a service representative authorized by OPW, or when failure is due to misuse, or improper installation or maintenance. OPW shall have no liability whatsoever for special, incidental or consequential damages to any party, and shall have no liability for the cost of labor, freight, excavation, clean up, downtime, removal, reinstallation, loss of profit, or any other cost or charges.

For any product certified to California 2001 standards, OPW warrants that product sold by it are free from defects in material and workmanship for a period of one year from date of manufacture or one year from date of registration of installation not to exceed 15 months from date of manufacture by OPW.

THIS WARRANTY IS IN LIEU OF ALL OTHER WARRANTIES, EXPRESS OR IMPLIED, AND SPECIFICALLY THE WARRANTIES OF MERCHANTABILITY AND FITNESS FOR A PARTICULAR PURPOSE. THERE ARE NO WARRANTIES, WHICH EXTEND BEYOND THE DESCRIPTION ON THE FACE HEREOF.

61JSK-4400 Performance Specifications:

This OPW Jack Screw Kit is designed to lock an OPW 61SO-EVR Series Overfill Valve or 61T Drop Tube into an OPW 1-2100-EVR Series Spill Container Base below the outlet of the drain valve.

Torque Specification:
1/4-20 Screw, 3.0 ft-lbs minimum to 4.5 ft-lbs maximum.

4" Nipple, 125 ft-lbs minimum to 250 ft-lbs maximum.

4” NPT Thread, 125 ft-lbs minimum to 250 ft-lbs maximum.

OPW NO. 61JSK-4400 JACK SCREW KIT INSTALLATION INSTRUCTIONS:

Step 1

Remove any old or dried pipe dope and metal burrs from top of riser pipe. Apply a gasoline resistant pipe dope on the threads of an OPW FSA-400 Face Seal Adapter and install onto the riser pipe. Torque to 125 ft-lbs min. to 250 ft-lbs max, 4"NPT using the OPW 61SA-TOOL.

Step 2:

Install the OPW 1-2100-EVR or POMECO 500 Series Spill Container in accordance with the OPW Installation Instructions supplied with the product.

Step 3: (See Figure 2 & 2A)

Assemble and Install the OPW Drop Tube in accordance with the OPW Installation Instructions supplied with the product.

Step 4: (See Figure 3)

Insert the Jack Screw Lower Plate (plate without threads) completely into the spill container base on top of the drop tube flange with the screw pockets facing up.

Step 5: (See Figure 5)

Assemble screws into upper plate. Adjust the screws so that the top plate will be located just below the bottom of the threads in the spill container base when the assembly is inserted into the spill container. Apply the supplied thread sealant to the threads above the top plate on all three screws on the Jack Screw Top Assembly.

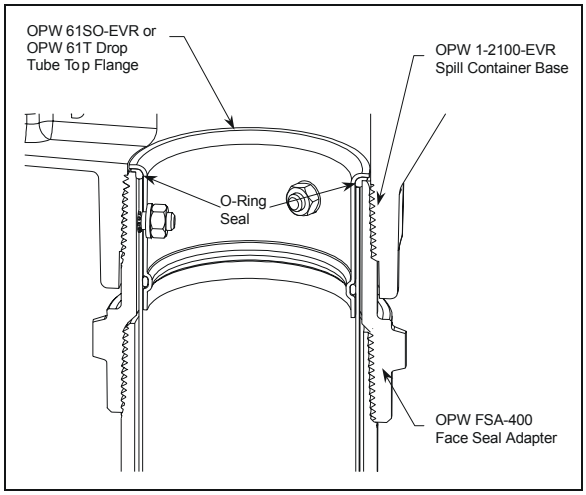

Figure 2

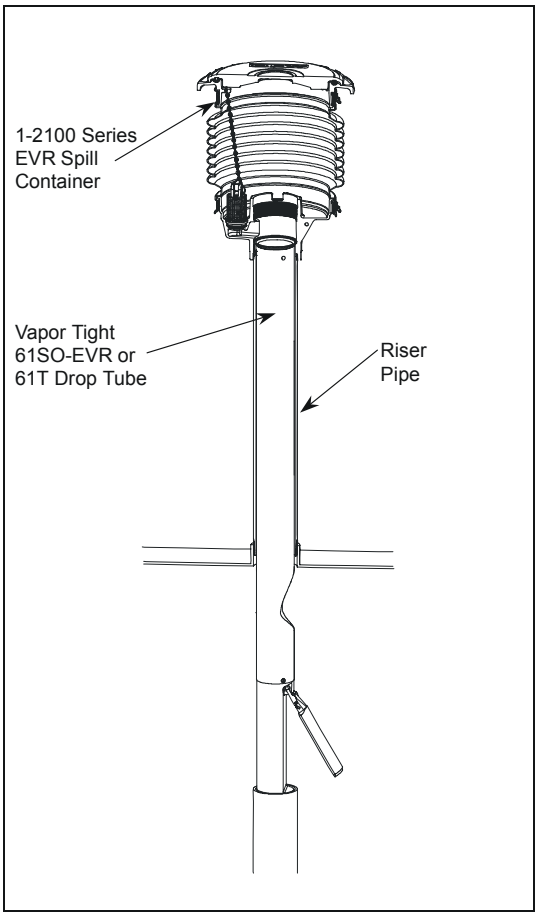

Figure 2a

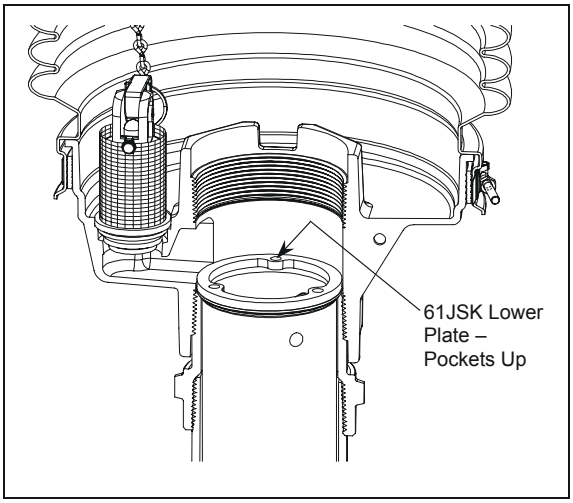

Figure 3

Step 6: (See Figure 5)
Install the Jack Screw Assembly into the spill container base. Make sure the bottoms of the three screws are seated in the pockets on the Jack Screw Lower Plate.

Step 7: (See Figure 6)
Apply a gasoline resistant pipe dope on the threads of a 4" nipple. Install the 4" nipple into the spill container and tighten securely. (Recommended torque, 4"NPT, 125 ft-lbs min. to 250 ft-lbs max.)
Note: The top plate should not be in contact with the nipple at this point. If the nipple hits the top plate while being tightened, remove the nipple, lower the top plate on the jack screw below the threads on the spill container, and then reinstall the nipple.

Step 8: (See Figure 7)
Using a long screwdriver, alternately and evenly tighten the three (3) screws on the Jack Screw Assembly until the Upper Plate contacts the bottom of the 4" nipple. Tighten the three (3) screws evenly and securely with a torque of 3.0 ft-lbs min. to 4.5 ft-lbs max to ensure that the drop tube flange is sealed securely to the riser pipe.

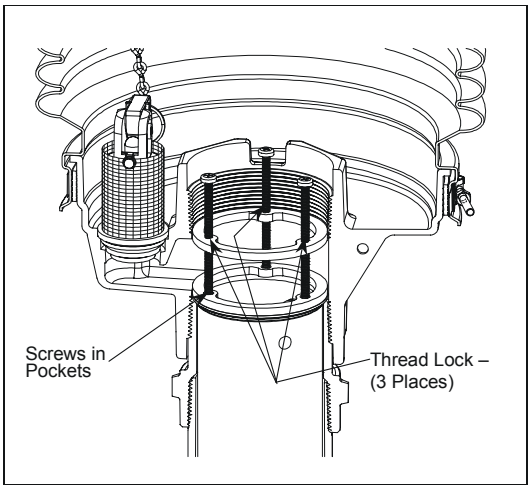

Figure 5

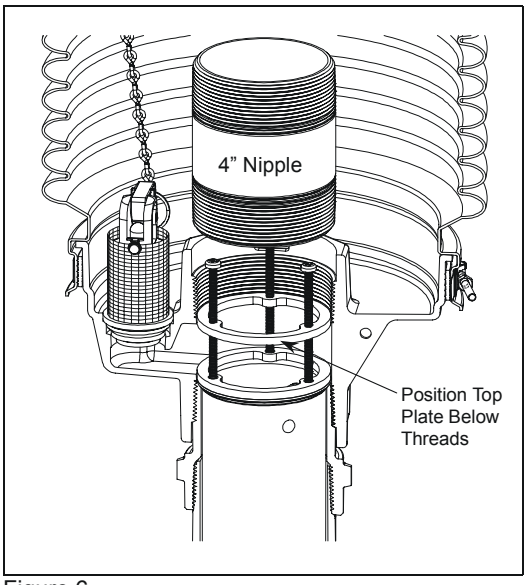

Figure 6

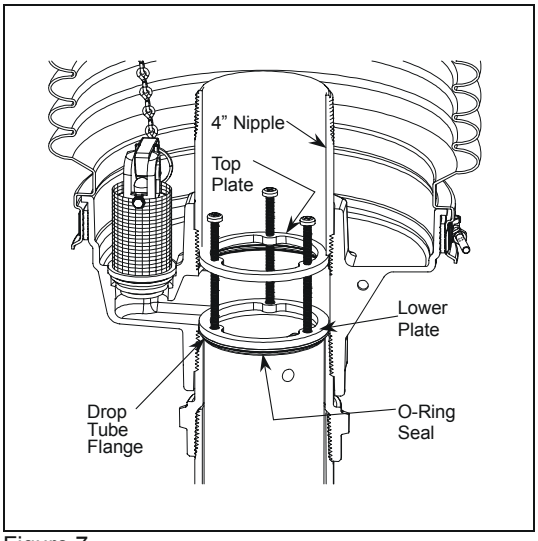

Figure 7

Step 9: (See figure 8)
Assembly of the Jack Screw Kit is now complete. Proceed to installation of the OPW 61SALP-EVR Rotatable Product Adaptor and OPW 634TT Cap in accordance with the OPW Installation Instructions supplied with the product.

Operation and Maintenance:

If a leak develops at the drop tube. Re-torque the (3) screws on the Jack Screw. (Torque value: 3.0 ft-lbs min. to 4.5 ft-lbs max.) If this does not correct the leak, check for burrs, clean the sealing surface on the FSA-400 and replace the o-ring on the drop tube.
NOTE: Loctite 242, thread locker, must be reapplied each time the screws are adjusted.

Important: Leave these instructions with Station Operator.

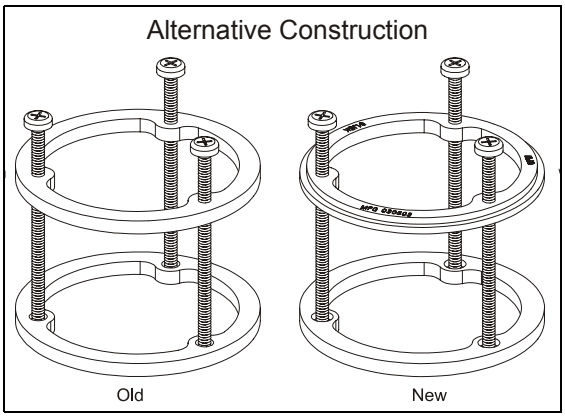

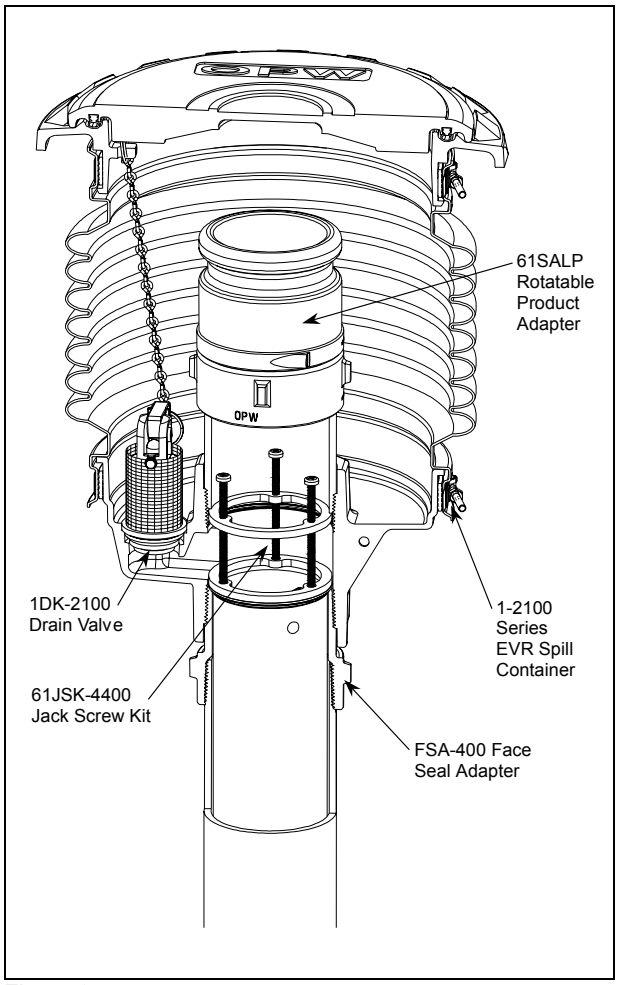

Figure 8

P.O. Box 405003 * Cincinnati, Ohio 45240-5003
1-800-422-2525 Domestically
513-870-3315 Internationally
www.opw-fc.com

Copyright, 2002 - OPW Fueling Components Inc., Cincinnati, OH
Printed in U.S.A. p/n H14727PA – 10/03

Figure H-3

OPW FSA-400 and FSA-400-S Face Seal Adaptor

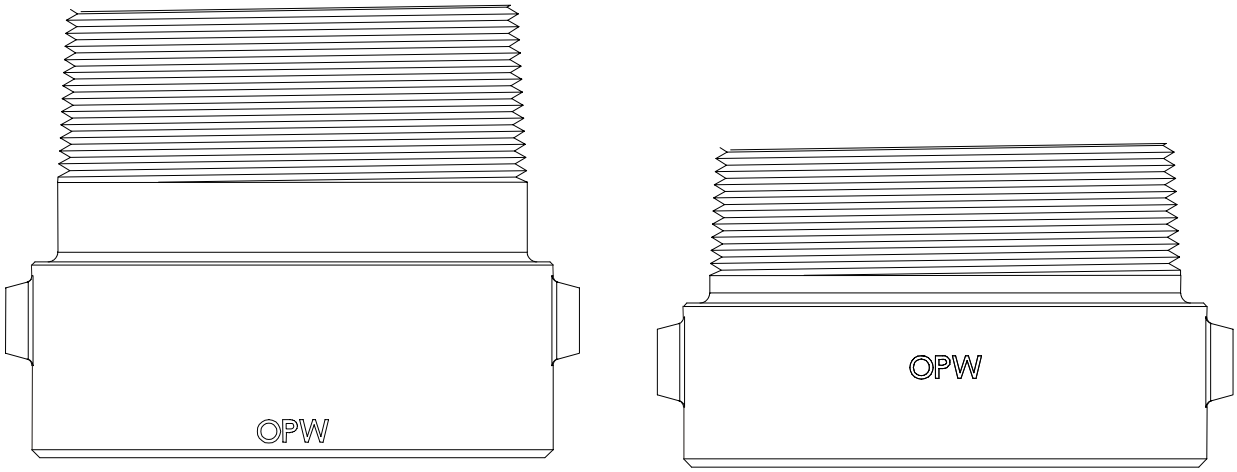

FSA-400 **FSA-400-S**

Operation and Maintenance

1. Apply non-hardening, gasoline-resistant, pipe thread seal compound to the threads.
2. Tighten the FSA-400 or FSA-400-S onto the riser with a torque of 125 ft-lbs minimum to 250 ft-lbs maximum. Use the OPW 61SA-TOOL to install.

Standard Product Warranty

OPW warrants that products sold by it are free from defects in materials and workmanship for a period of one year from the date of manufacture by OPW (ECO products two years from date of manufacture.) Proof of purchase may be required. As the exclusive remedy under this limited warranty, OPW, will at its sole discretion, repair, replace, or issue credit for future orders for any product that may prove defective within the one year date of manufacture period (repairs, replacements, or credits may be subject to prorated warranty for remainder of the original warranty period, complete proper warranty claim documentation required.) This warranty shall not apply to any product that has been altered in any way, which has been repaired by any party other than a service representative authorized by OPW, or when failure is due to misuse, or improper installation or maintenance. OPW shall have no liability whatsoever for special, incidental or consequential damages to any party, and shall have no liability for the cost of labor, freight, excavation, clean up, downtime, removal, reinstallation, loss of profit, or any other cost or charges.

For any product certified to California 2001 standards, OPW warrants that product sold by it are free from defects in material and workmanship for a period of one year from date of manufacture or one year from date of registration of installation not to exceed 15 months from date of manufacture by OPW.

THIS WARRANTY IS IN LIEU OF ALL OTHER WARRANTIES, EXPRESS OR IMPLIED, AND SPECIFICALLY THE WARRANTIES OF MERCHANTABILITY AND FITNESS FOR A PARTICULAR PURPOSE. THERE ARE NO WARRANTIES, WHICH EXTEND BEYOND THE DESCRIPTION ON THE FACE HEREOF.

OPW®

A DOVER™ COMPANY

P.O. Box 405003 * Cincinnati, Ohio 45240-5003
1-800-422-2525 Domestically
513-870-3315 Internationally
www.opw-fc.com

Figure H-4

OPW 61T Drop Tube

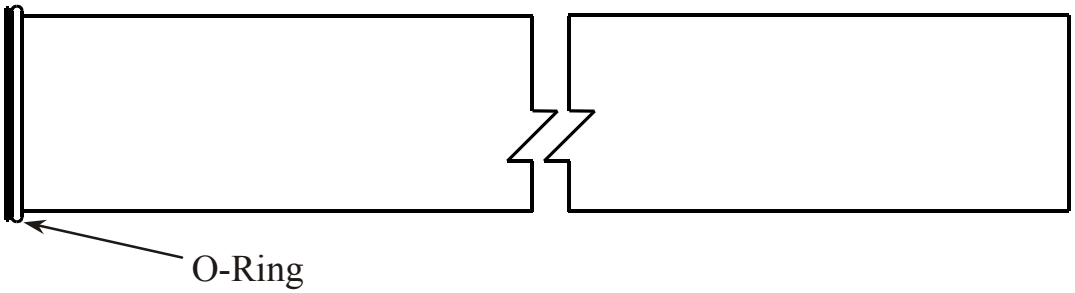

Installation Instructions

1. Cut the tube to a length so that it is not more than 6” from the bottom of the tank or per local codes or requirements. Saw off the excess tube at a 45-degree angle and file off any sharp burrs.

Operation and Maintenance:

Annually: Test the drop tube seal with ARB procedure TP-201.1C or TP-201.1D. If the drop tube seal passes testing, no further maintenance is required. If the drop tube seal fails testing, replace the drop tube seal with OPW P/N: H11931M for 4” Tubes. Re-test the drop tube seal with ARB procedure TP-201.1C or TP-201.1D.

Standard Product Warranty

OPW warrants that products sold by it are free from defects in materials and workmanship for a period of one year from the date of manufacture by OPW (ECO products two years from date of manufacture.) Proof of purchase may be required. As the exclusive remedy under this limited warranty, OPW, will at its sole discretion, repair, replace, or issue credit for future orders for any product that may prove defective within the one year date of manufacture period (repairs, replacements, or credits may be subject to prorated warranty for remainder of the original warranty period, complete proper warranty claim documentation required.) This warranty shall not apply to any product that has been altered in any way, which has been repaired by any party other than a service representative authorized by OPW, or when failure is due to misuse, or improper installation or maintenance. OPW shall have no liability whatsoever for special, incidental or consequential damages to any party, and shall have no liability for the cost of labor, freight, excavation, clean up, downtime, removal, reinstallation, loss of profit, or any other cost or charges.

For any product certified to California 2001 standards, OPW warrants that product sold by it are free from defects in material and workmanship for a period of one year from date of manufacture or one year from date of registration of installation not to exceed 15 months from date of manufacture by OPW.

THIS WARRANTY IS IN LIEU OF ALL OTHER WARRANTIES, EXPRESS OR IMPLIED, AND SPECIFICALLY THE WARRANTIES OF MERCHANTABILITY AND FITNESS FOR A PARTICULAR PURPOSE. THERE ARE NO WARRANTIES, WHICH EXTEND BEYOND THE DESCRIPTION ON THE FACE HEREOF.

OPW
A DOVER COMPANY

P.O. Box 405003 * Cincinnati, Ohio 45240-5003
1-800-422-2525 Domestically
513-870-3315 Internationally www.opw-fc.com

Figure J-1

H14790PA
April 2004

OPW Installation & Maintenance Instructions

ASSEMBLY, INSTALLATION, a nd MAINTENANCE INSTRUCTIONS FOR OPW 61SO-EVR VAPOR TIGHT, OVERFILL PREVENTION VALVES.

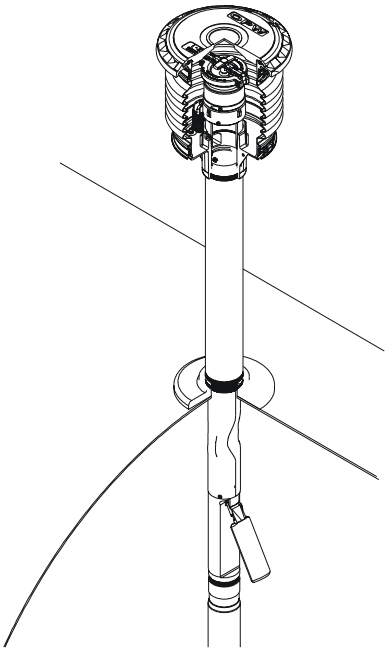

IMPORTANT: Please read these assembly and installation instructions completely and carefully before starting.

Vapor Tight Overfill Prevention Valves

GENERAL INSTRUCTIONS

The OPW 61SO Overfill Prevention Valve is designed for tight fill, gravity drop applications to help prevent accidental or intentional overfilling of underground storage tanks. It is installed in the UST drop tube in place of a standard drop tube.
The main 61SO valve closes when liquid level is at 95% of the top of the tank. A small bypass valve remains open to allow the delivery hose to drain at 3-5 gallons per minute. If the delivery truck valve is not closed after initial shut-off, the bypass valve will close and will restrict all fuel delivery.

The 61SO-EVR models of the 61SO are designed to be installed with the following OPW products: FSA-400 Face Seal Adapter, 1-2100-EVR Series Spill Container or POMECO Multi-port, 61JSK Jack Screw Kit, 61SALP-EVR Series Rotatable Product Adaptor, and 634TT-EVR Series Product Cap.

IMPORTANT
Read these assembly and installation instructions completely and carefully prior to starting. Check to make sure all parts have been provided. Use only the parts supplied; substitution of parts may cause product failure.

Failure to follow instructions may cause improper product operation or premature failure which may permit storage tank overfill. An overfilled storage tank may create hazardous conditions and/or environmental contamination.

CAUTION
Do not remove elastic band from around float until instructed to do so, as damage to valve may result.

WARNING
Failure to properly connect delivery hose and elbow, and/or disconnecting a liquid filled delivery hose or elbow will result in a hazardous spill, which may result in personal injury, property damage, fire, explosion, and water and soil pollution.

* Make sure all connections, including the hose and elbow connections, between storage tank and transport are securely coupled.
* Make sure the lip seal and/or all gaskets in the delivery elbow are properly in place to prevent spills.
* Do not operate with damaged or missing parts, which prevent tight connections.

Normal Operation: A Hose ”Kick” and reduced flow signal that the tank is full. Close transport delivery valve and drain hose into tank before disconnecting any hose fitting.

Overfilled Tank: Failure of the hose to drain after closing the delivery valve signals an overfilled tank. Do Not Disconnect any delivery hose fitting until the liquid level in the tank has been lowered to allow the hose to drain into the tank. Attention: In the event you are splashed, remove all wetted clothing immediately. Do not go into an enclosed area and stay away from ignition sources.

IMPORTANT
Determine if the underground storage tank is equipped with a ball float vent valve similar to the OPW 53VML, as illustrated in Figure 16. In all systems, the shut-off point of the 61SO must be reached before the ball float reduces flow to ensure proper overfill valve operation.

TOOLS NEEDED FOR INSTALLATION AND ASSEMBLY:

1. Drill
2. A sharp 1/8" pilot drill bit
3. A sharp 5/16" drill bit
4. Tape measure
5. Hacksaw or cut-off saw, fine tooth; 24 teeth/inch
6. Fine half round file
7. Screwdriver - Phillips blade
8. ½" Wrench or socket
9. Two-part sealant (Supplied)
10. Torque Wrench

WARNING
Using electrically operated equipment near gasoline or gasoline vapors may result in fire or explosion, causing personal injury and property damage. Check to assure the working area is free from such hazards, and always use proper precautions.

IMPORTANT: The figures in this installation and maintenance instruction may contain vapor recovery equipment (including model numbers) that is not certified by the California Air Resources Board (CARB) for a specific Phase I Vapor Recovery System. Please refer to Exhibit 1 of the appropriate CARB Phase I Executive Order for a list of certified Phase I Vapor Recovery System Equipment.

HOW TO LOCATE THE POSITION OF THE 61SO AT 95% TANK CAPACITY

The length of the upper tube and the placement of the 61S0 valve body determine the shut-off point. Following the standard instructions for the OPW 61SO will provide for initial shutoff at 95%. In all cases, the upper tube length must be a minimum of 6-1/2" plus the length of the riser pipe. All length measurements are in inches.

INSTRUCTIONS

1.) Find tank capacity (in gallons) from tank calibration chart provided by tank manufacturer.

2.) Calculate 95% of capacity.

3.) Locate the 95% volume number on the tank calibration chart.

4.) Find the dipstick number (X) which corresponds to the 95% tank volume. And, find the dipstick number (Y) which corresponds to the 100%volume.

5.) Subtract the dipstick number (X) from the tank diameter (Y) to find the upper tube reference number (Z).
(Y) - (X) = (Z)

6.) Subtract 2" from (Z) to find the upper tube depth (C).
(Z) - 2" = C

7.) Is C less than 6-1/2"?

NO Upper tube length is C plus the distance from the top of the FSA-400 Face Seal Adaptor installed on the riser pipe to the inside, top lip of the storage (A).

Upper Tube Length = C + (A)

YES Upper tube length is 6-1/2" plus the riser pipe measurement (A).

Upper Tube Length = 6-1/2" + (A)

NOTE: You must find the actual tank capacity number that correlates to the 6-1/2" + (A) depth for the station records. This number may also be used for the purposes of calibrating an electronic tank level system.

® Registered T.M. - Owens Corning Fiberglass Corporation

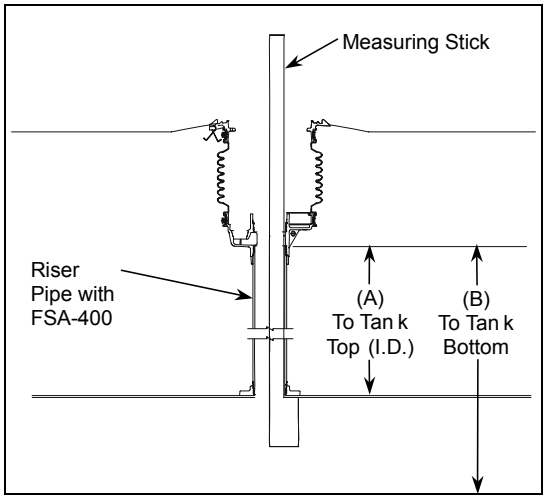

EXAMPLE

1.) For an Owens-Corning Model G-3 Fiberglass® Tank Calibration Chart:
Tank Capacity - 10,000 gal., nominal 9,403 gal.
NOTE: Use actual capacity only

2.) 95% of actual tank capacity = 0.95 x 9403 gal. = 8933 gal.

3.) The closest number which is less than 8933 gal. Is 8910 gal. Choosing the closest number less than 95% of actual capacity ensures that the initial shutoff will occur when the tank is no more than 95% full.

4.) The calibration chart reading of 8910 gal. corresponds to a dipstick measurement of 82".

5.) Dipstick number (X) = 82"
Tank diameter (Y) = 92"
(X) - (Y) = (Z) (92 "- 82" = 10")
(Z) = 10"

6.) (Z) - 2" = C (10" - 2" = 8")
C = 8"

7.) Is 8" less than 6-1/2"?

NO Measure the distance from the top of the FSA-400 Face Seal Adaptor installed on the riser pipe to the inside, top lip of the storage tank and obtain measurement (A).

Upper tube length = C + (A)

ASSEMBLY INSTRUCTIONS

IMPORTANT: Each of the numbered steps in the installation instructions are designed as a CHECK LIST to insure proper installation and trouble free operation of the OPW 61SO Overfill Prevention Valve.

Read and follow these steps carefully, checking them off as you proceed.

Figure numbers correspond to step numbers for easy reference.

STEP 1: MEASURE
Install the OPW FSA-400 Face Seal Adaptor and the 1-2100-EVR Series Thread-on Spill Container on the Fill Riser (Refer to the Installation Instructions Supplied with the 1-2100-EVR Series Spill Container). Insert the 61SO measuring stick through the riser pipe and hook it under the inside of the tank in the lengthwise direction. Mark the measuring stick at the top of the FSA-400 threads inside the base of the spill container bucket just below the drain valve outlet window (See Figure 1 &1A). The top flange on the 61SO will rest on the FSA-400 just below the drain valve outlet, and be locked in place between the FSA-400 and the 4" nipple that is installed in the spill container with the 61JSK Jack Screw Kit (See Figure 1A). (For riser pipe configurations other than that shown, consult installation drawings or use other necessary means to measure Dimension “A”).

Using a tape measure, measure the distance from the top of the FSA-400 in the spill container to the bottom of the tank (Dim. “B”).

IMPORTANT: Inspect the riser pipe for any foreign material. Over spray from tank relining or any internal burrs inside of pipe must be removed prior to installation. Failure to have an unobstructed riser pipe may prevent proper installation and operation of the valve. The 61SO is designed to be installed into schedule 40 riser pipes. The 61SO cannot be installed into schedule 80 riser pipes.

STEP 2: MARK THE TUBE
Use the result from STEP 1 and HOW TO LOCATE THE POSITION OF THE 61SO AT 95% TANK CAPACITY to mark the upper tube. Measure the distance from the point where the upper tube and valve body meets as shown in Figure 2.

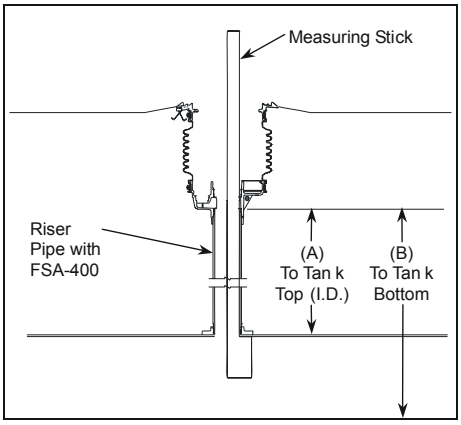

Figure 1

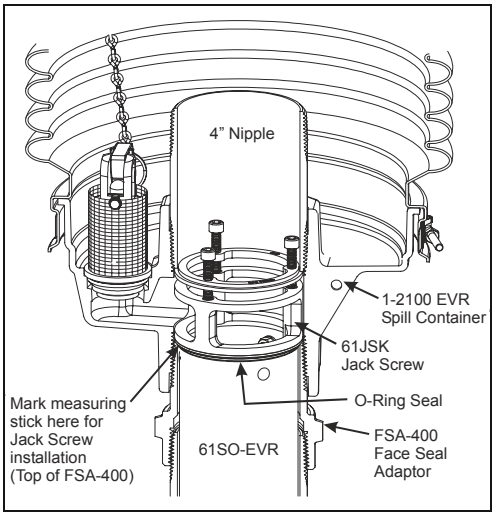

Figure 1A

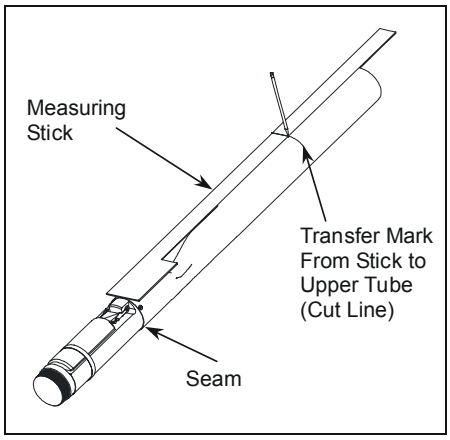

Figure 2

STEP 3: CUT THE UPPER DROP TUBE
Carefully saw through the tube squarely, at the mark made in Step 2. Use a hacksaw with a new fine-tooth blade. Rotating the upper tube as the sawing progresses will minimize run out and ensure a square 90-degree cut. A piece of paper, taped square with the tube or a hose clamp can be use as guides for making a square cut.
CAUTION -DO NOT use a pipe or tubing cutter to cut the upper drop tube, this may damage the tube, causing it to be out of round thereby prohibiting assembly of the unit.

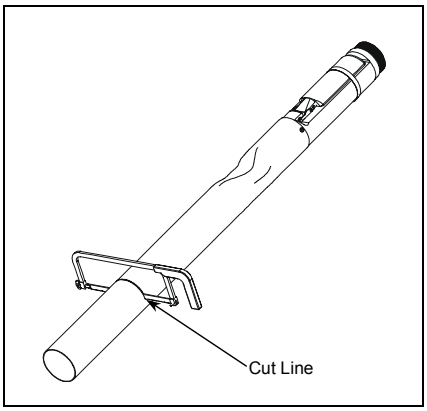

Figure 3

STEP 4: FILE THE DROP TUBE
File the upper tube square, and remove any burrs or rough edges. Make sure the cut is flat and square.

IMPORTANT: Carefully file a **good chamfer** on the inside of the drop tube to provide a lead-in for the o-ring and inlet tube to be installed in step 6.

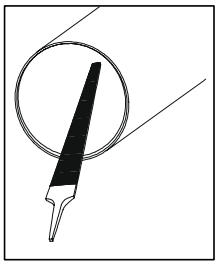
Figure 4

Caution: Failure to properly apply and cure sealant may result in a failure of a pressure decay leak test.

STEP 5: APPLY SEALANT
Prepare sealant by thoroughly mixing 1/3 of each packet together until color is uniform.
Generously apply sealant to the inside diameter of the upper drop tube. Make sure coverage is completely around the tube as shown in Fig. 5.

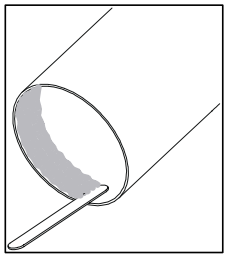
Figure 5

STEP 6: INSTALL INLET TUBE
Install o-ring in the o-ring groove of inlet tube (DO NOT USE GREASE). Insert the inlet tube into the upper tube until it seats against the flange on the upper inlet tube.

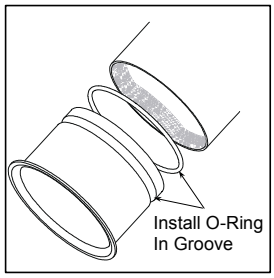

Figure 6

STEP 7: DRILL HOLES
With the inlet tube in place, carefully drill (3) 1/8" diameter pilot holes through the drop tube and inlet tube at three locations at 120 degree intervals around the tube, 1 inch below the flange. Using the pilot holes, drill (3) 5/16" dia. holes through the tubes. Remove the burrs from the drilling operation from the inside of the drop tube assembly with a fine half round file.
IMPORTANT: A 5/16" drill bit must be used. Do not substitute any other size drill bit.

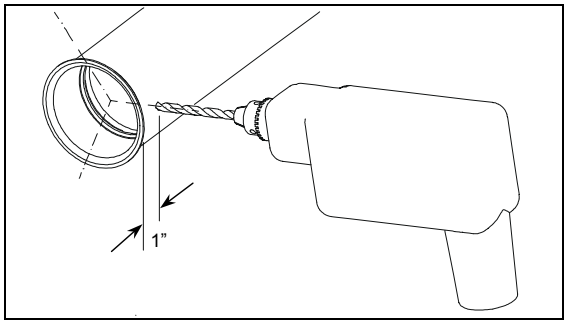

Figure 7

STEP 8: ASSEMBLE AND SEAL CLINCH STUDS
Loosely assemble the three (3) clinch studs, lock washers, and nuts in holes. Do not tighten at this time. Mix up a small amount of sealant. Generously apply sealant underneath each clinch stud head, each nut, and on the outside of the tube around the holes.

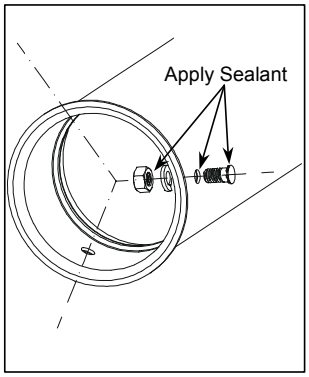

Figure 8

STEP 9: TIGHTEN SELF-CLINCHING STUDS
Tighten clinch studs securely with a ½" wrench. Use only the self-clinching studs that are supplied with the unit. Seating torque is 11.5 ft-lbs min. to 13.5 ft-lbs max. Do not over tighten.
Note: **Failure to properly apply and cure the sealant may result in a failure of a pressure decay leak test.**

STEP 10: LOWER TUBE ASSEMBLY
If a vise is used, clamp on the valve body casting only to avoid damage to the float. Mix the remaining sealant until the color is uniform. Using the mixing stick, **generously apply sealant to the first 6 male threads on the valve body** as shown in figure 10. Make sure coverage is completely around the threads, and work the sealant down into the thread profile. Quickly thread the lower tube onto the valve body. Tighten the tube securely by hand or with a strap wrench. Remove excess sealant and smooth sealant bead with water moistened mixing stick.

Important: Allow sealant (epoxy) to cure for 24 hours before installing into tank.

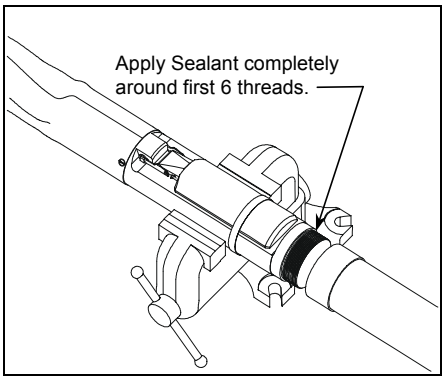

Figure 10

Note: Before installing the valve in the tank, a pressure test can be performed on the valve to check for vapor tightness. Seal off both ends of the tube with inflatable plumber's plugs. Apply a maximum 10" W.C. (1/3 PSI) air pressure. If pressure does not hold and a leak can be located with soap solution, do not install the valve. Send the valve back to OPW for warranty evaluation.
Caution: Do not over-pressure. Excess pressure can damage the valve

STEP 11: CUT LOWER TUBE AT 45° ANGLE
Measuring from the underside of the inlet tube flange, mark the overall length of the drop tube a distance of (B) minus 6" or as per local codes or requirements. Determine dimension (B) from the measurements taken in Step 1, Figure 1 (Top of the FSA-400 below the drain valve outlet in the spill container to the bottom of the tank). Saw off the excess tube at a 45-degree angle and file off any sharp burrs (Refer to Figure 16). Optional: Install the OPW/POMECO Tank Bottom Protector on the lower tube (Refer to Installation instructions supplied with the 6110 Tank Bottom Protector).

STEP 12: PREPARE FILL RISER FOR VALVE INSERTION

IMPORTANT: Inspect the riser pipe for any foreign material. Over spray from tank relining or any internal burrs inside of pipe must be removed prior to installation. Failure to have an unobstructed riser pipe may prevent proper installation or operation of the valve. Thoroughly clean top of riser pipe.

Important: Before installing the valve, allow sealant to cure for 24 hours.

STEP 13: REMOVE ELASTIC BAND
Remove the elastic band securing the float to the valve body. The float will move into an outward position.

STEP 14: INSERT DROP TUBE
Make sure the O-Ring gasket is under the flange of the inlet tube. Hold the float down against the valve body and slowly insert the drop tube overfill valve into the riser pipe. Do not force valve into the riser pipe. If any obstruction or foreign matter interferes with smooth insertion of the valve, the riser pipe must be cleared.

WARNING
Failure to follow the assembly and installation instructions or use of excessive force to insert the OPW 61SO will VOID THE WARRANTY!

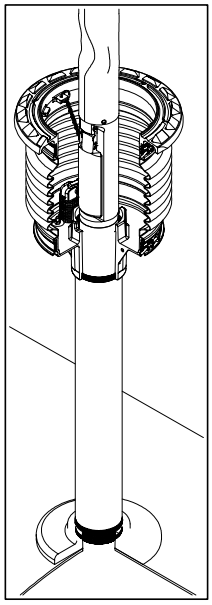
Figure 14

Difficulty in removing the existing fill tube (if there is one) means there may be an obstruction in the riser pipe. Look for burrs, deformations, excess tank lining material or other projections that may interfere with easy insertion of the OPW 61SO. The 61SO is designed for insertion into schedule 40 pipe. If schedule 80 pipe has been

used for the riser, the 61SO can not be installed. If seamed pipe has been used, the internal weld bead may interfere with the OPW 61SO and prevent installation. If the OPW 61SO won't slip in easily DON'T FORCE IT! Damage to the valve may result if excess force is used. Examine the riser pipe carefully; determine the nature of the obstruction; take appropriate steps to remove it.

STEP 15: CHECK INSTALLATION

Insert the drop tube all the way into the tank until the flange and gasket seat onto the top of the FSA-400. The float will swing out into the operating position as it passes into the tank.

Make sure that the float is aligned along the length of the tank. The length of the tank can easily be determined by locating other manholes or pump boxes that are installed around other tank fittings. Look into the drop tube and align the deflector with the length of the tank.

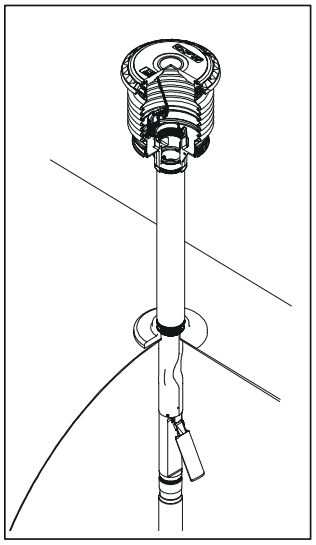

Figure 15

CAUTION: No obstruction in the tank can be within 13" from the center of the riser pipe or the valve may not operate properly.

STEP 16: ALIGN VALVE

Install the OPW 61JSK Jack Screw Kit and a 4" nipple to lock the valve in place. Refer to the Installation Instructions supplied with the Jack Screw Kit. Install the 61SALP-EVR Rotatable Product Adaptor (Refer to Installation Instructions supplied with the 61SALP-EVR.) Make sure that the valve does not rotate while tightening the adaptor by observing the position of the deflector. **The valve must remain aligned along the length of the tank as in Step 15**. Repeat this step as necessary to assure proper valve alignment.

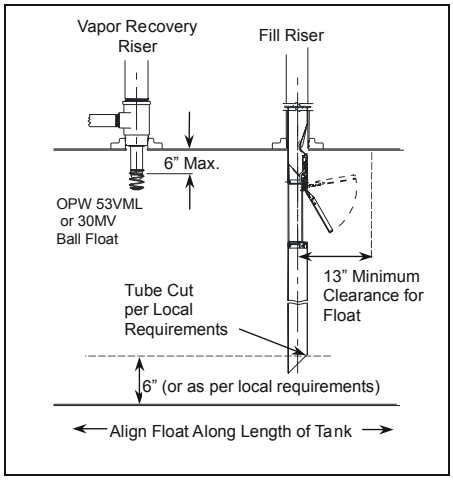

Figure 16

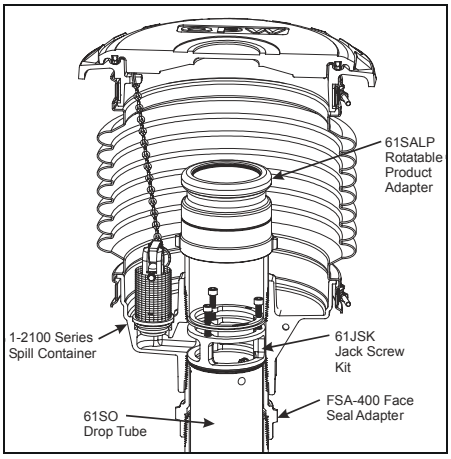

Figure 16A

STEP 17: INSTALL WARNING PLATE

Slide the tie wrap over the warning plate ears and position warning plate against riser pipe approximately 1" below the adaptor. Tighten the tie wrap securely. The valve is now fully installed and in operating position.

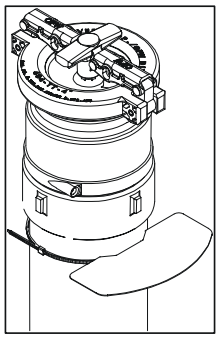

Figure 17

STEP 18: VALVE REMOVAL

The valve can be removed for tank leak testing, inspection, etc., by removing the 61SALP-EVR Rotatable Product Adaptor, the 4" nipple, and the 61JSK Jack Screw Kit. Reinstall per the above instructions.

Step 19: Electronic Liquid Level Monitoring
If an electronic level monitor is installed, it must be calibrated to match the top of the 61SO valve body, which must correlate with 95% of the actual tank capacity.

PREVENTATIVE MAINTENANCE
Annually, inspect the flapper in the 61SO to see that it is open by looking down the drop tube opening. Test the 61SO drop tube seals with CARB procedure TP-201.1D. If the drop tube seal passes testing, no further maintenance is required. If the drop tube fails testing, replace the drop tube seal with OPW P/N: H11931M for 4" Tubes. Re-test the 61SO drop tube with CARB procedure TP-201.1D. If this does not correct the leak the 61SO needs to be replaced.

CAUTION: Do not insert any foreign object into drop tube if flapper is in the closed position. For example a tank level measuring stick. This will damage the valve and void the Warranty. ALWAYS check flapper location before "sticking" the tank. If flapper is in the closed position the tank is either over filled and you need to wait until the liquid level goes down or the 61SO is damaged and needs to be replaced.

61SO Performance Specifications:
This Overfill Prevention Valve has been manufactured and tested to, and met, the following California specifications. Performance Requirement: Leak rate to be less than or equal to 0.17 CFH @ 2.0" W.C.

Torque Specification:
Self-Clinching Studs, 5/16-8 UN thread, 11.5 ft-lbs minimum to 13.5 ft-lbs maximum.

Important: Leave these installation instructions and maintenance procedures with the station operator.

Notice: OPW products must be used in compliance with applicable federal, state, and local laws and regulations. Product selection should be based on physical specifications and limitations and compatibility with the environment and material to be handled. All illustrations and specifications in this literature are based on the latest production information available at the time of publication. Prices, materials, and specification are subject to change at any time, and models may be discontinued at any time, in either case, without notice or obligation.

Standard Product Warranty

OPW warrants that products sold by it are free from defects in materials and workmanship for a period of one year from the date of manufacture by OPW (ECO products two years from date of manufacture.) Proof of purchase may be required. As the exclusive remedy under this limited warranty, OPW, will at its sole discretion, repair, replace, or issue credit for future orders for any product that may prove defective within the one year date of manufacture period (repairs, replacements, or credits may be subject to prorated warranty for remainder of the original warranty period, complete proper warranty claim documentation required.) This warranty shall not apply to any product that has been altered in any way, which has been repaired by any party other than a service representative authorized by OPW, or when failure is due to misuse, or improper installation or maintenance. OPW shall have no liability whatsoever for special, incidental or consequential damages to any party, and shall have no liability for the cost of labor, freight, excavation, clean up, downtime, removal, reinstallation, loss of profit, or any other cost or charges.

For any product certified to California 2001 standards, OPW warrants that product sold by it are free from defects in material and workmanship for a period of one year from date of manufacture or one year from date of registration of installation not to exceed 15 months from date of manufacture by OPW.

THIS WARRANTY IS IN LIEU OF ALL OTHER WARRANTIES, EXPRESS OR IMPLIED, AND SPECIFICALLY THE WARRANTIES OF MERCHANTABILITY AND FITNESS FOR A PARTICULAR PURPOSE. THERE ARE NO WARRANTIES, WHICH EXTEND BEYOND THE DESCRIPTION ON THE FACE HEREOF.

OPW
A DOVER COMPANY

P.O. Box 405003 * Cincinnati, Ohio 45240-5002
1-800-422-2525 Domestically
513-870-3315 Internationally
www.opw-fc.com
Copyright, 2004 - OPW Fueling Components Inc., Cincinnati, OH
Printed in U.S.A. p/n H14790PA - 4/04

Figure K-1

OPW/POMECO Installation and Maintenance Instructions Multi-Port Spill Containment Manhole

IMPORTANT: Please read these warnings and use the assembly instructions completely and carefully before starting. Failure to do so may cause product failure, or result in environmental contamination due to liquid leakage into the soil, creating hazardous spill conditions.

IMPORTANT: The POMECO Spill Container is pre-assembled for your convenience and ease of installation. Check to make sure the unit is intact and undamaged and all parts have been supplied. Never substitute parts for those supplied. Doing so may cause product failure.

WARNING-DANGER: Using electrically operated equipment near gasoline or gasoline vapors may result in a fire or explosion, causing personal injury and property damage. Be sure that the working area is free from such hazards, and always use proper precautions. NOTE: At all times when product is in the storage tank keep the riser pipe capped, so the vapors cannot escape into the environment.

Notice: OPW products must be used in compliance with applicable federal, state, and local laws and regulations. Product selection should be based on physical specifications and limitations and compatibility with the environment and material to be handled. All illustrations and specifications in this literature are based on the latest production information available at the time of publication. Prices, materials, and specification are subject to change at any time, and models may be discontinued at any time, in either case, without notice or obligation.

Standard Product Warranty

OPW warrants that products sold by it are free from defects in materials and workmanship for a period of one year from the date of manufacture by OPW (ECO products two years from date of manufacture.) Proof of purchase may be required. As the exclusive remedy under this limited warranty, OPW, will at its sole discretion, repair, replace, or issue credit for future orders for any product that may prove defective within the one year date of manufacture period (repairs, replacements, or credits may be subject to prorated warranty for remainder of the original warranty period, complete proper warranty claim documentation required.) This warranty shall not apply to any product that has been altered in any way, which has been repaired by any party other than a service representative authorized by OPW, or when failure is due to misuse, or improper installation or maintenance. OPW shall have no liability whatsoever for special, incidental or consequential damages to any party, and shall have no liability for the cost of labor, freight, excavation, clean up, downtime, removal, reinstallation, loss of profit, or any other cost or charges.

For any product certified to California 2001 standards, OPW warrants that product sold by it are free from defects in material and workmanship for a period of one year from date of manufacture or one year from date of registration of installation not to exceed 15 months from date of manufacture by OPW.

THIS WARRANTY IS IN LIEU OF ALL OTHER WARRANTIES, EXPRESS OR IMPLIED, AND SPECIFICALLY THE WARRANTIES OF MERCHANTABILITY AND FITNESS FOR A PARTICULAR PURPOSE. THERE ARE NO WARRANTIES, WHICH EXTEND BEYOND THE DESCRIPTION ON THE FACE HEREOF.

In California it is prohibited to use spill container drain valves on spill containers that are exclusively used for vapor return risers. Install only 511 or 561 Series Thread-On spill container models equipped with drain plug P/N 1DP-2100.

This Installation instruction applies to all OPW/POMECO Multiports, no matter how many spill containers are installed.

Multi-Port Performance Specifications:

This Spill Container drain valve has been manufactured and tested to the following California specifications: Leak Rate to be less than or equal to 0.17 CFH @ 2.0 " W.C.

Torques Specification:

Spill Container 4" NPT, 125 ft-lbs minimum to 250 ft-lbs maximum.

FSA-400, 4" NPT, 125 ft-lbs minimum to 250 ft-lbs maximum.

4" Nipple, 4" NPT, 125 ft-lbs minimum to 250 ft-lbs maximum.

Drain Valve clamps, 5/16-18 UN thread, 11.5 ft-lbs minimum to 13.5 ft-lbs maximum.

Mounting Ring Stud, 5/16-18 UN thread, 15 ft-lbs minimum to 20 ft-lbs maximum.

POMECO Multi-Port Spill Container Manhole Installation Instructions

1. Mark off finish grade. (See Figure 1.)

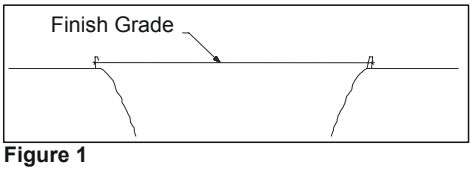

Figure 1

2. Set multi-port manhole assembly (skirt, ring, and cover) to the final grade position. (See Figure 2.)

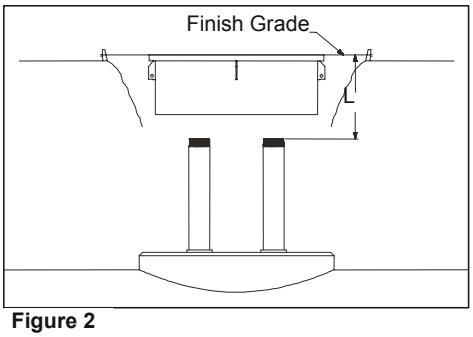

Figure 2

Note: It is strongly recommended that manhole covers be installed with the following minimum clearances. Sheet metal skirts should have adequate clearance between the tank sump riser sidewall and or the sump top hat. A minimum of one and a half inches clearance on all sides is recommended between the manhole skirt and the tank sump wall or the sump top hat wall. A minimum of two inches clearance is recommended between the bottom of the manhole skirt and the horizontal surface of the tank sump or sump top hat. These clearances are recommended to allow adequate water migration away from the sumps. Great care should be used to maintain the recommended clearances when setting the rings and pouring the concrete. (See Figure 3.)

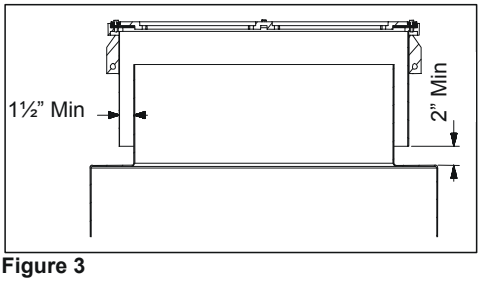

Figure 3

3. Remove the Manhole cover and measure the distance from the top of the tanks to the final grade.
4. Cut the riser(s) from the underground tank so that both the fill and vapor risers are set below the final grade. Use the dimensions below:

Spill Container	Inches below grade (L)
5 Gal. Cast Iron Base	18½"
5 Gal. Composite Base	19 5/8"
7.5 Gal. Cast Iron Base	22 ½"
7.5 Gal. Composite Base	23 5/8"
15 Gal Cast Iron Base	22 ½"
15 Gal. Composite Base	23 5/8"

Note:
If using OPW FSA-400, add 3-1/4" to Dimension "L".
If using OPW FSA-400-S, add 1-3/4 to Dimension "L".
The: FSA-400-S will only work with Cast Iron Base.
(See Figure 2.)

5. Deburr and thoroughly clean riser pipe(s).
6. Apply pipe dope to riser(s). The pipe dope used on all threads is to be a non-hardening, gasoline resistant, pipe thread seal compound.
7. Install OPW FSA-400 Face Seal Adapter onto riser. (Recommended Torque, 4" NPT, 125 ft-lbs min. to 250 ft-lbs max.). Apply pipe dope to FSA-400. This step is optional for spill containers that are on the vapor lines.
8. Thread on spill containers
9. Using the 61SA-TOOL, tighten the spill container(s) onto the riser(s) with a minimum torque of 125 ft.-lbs. and a maximum torque of 250 ft.-lbs.

Note: Do NOT attempt to completely tighten the spill container by using the spill container-mounting ring at the top of the bucket.

10. Inspect the spill container O-Rings and Mounting Ring O-Rings for damage. Replace if they are damaged. (See Figure 5)
11. Install Optional Multi-Port Water Shroud (MPWS). See separate instructions.
12. Remove Spill Container Cover(s) and Spill Container Mounting ring(s) from Manhole Cover. (See Figure 4)

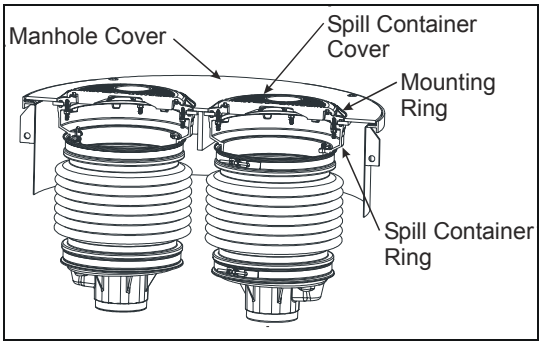

Figure 4

13. Replace the manhole cover, centering the riser(s) as close as possible in the containment openings. Be very careful not to move or damage the O-Rings.
14. Remove lock washers and nuts from the studded mounting ring.
15. Place the mounting ring over the spill container and rotate the mounting ring until the studs are aligned with the spill container ring holes. (See Figure 5.)

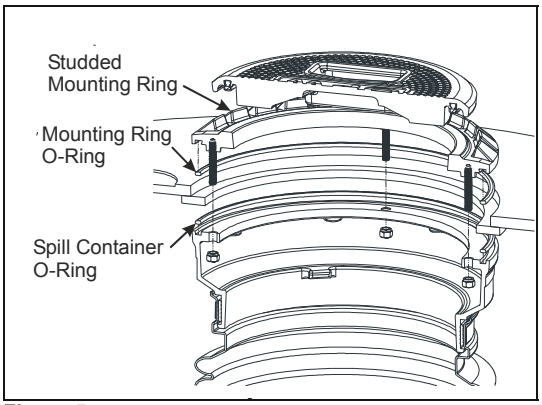

Figure 5

16. Install nut and lock washer onto studded mounting ring. Tighten the mounting ring retaining bolts until the spill container o-rings make contact with the multi-port cover. Then, in a crossing pattern, torque the bolts down between 15 to 20 ft.-lbs. 6 Point Ratcheting box wrench is recommended. (See Figure 6.)

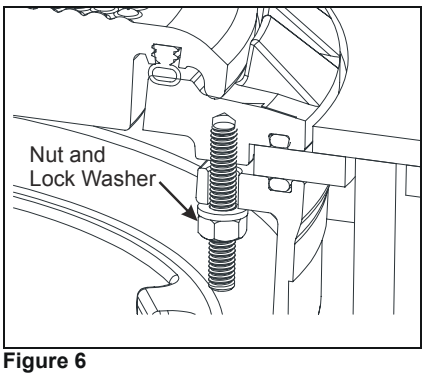

Figure 6

17. Install the spill container covers.
18. (Optional): Install the product identification disc on the spill bucket cover and multi-port cover in the I.D. disc recess.
19. Cover the multi-port perimeter ring and cover with plastic to prevent concrete from settling in the drainage areas.
20. It is required that the perimeter ring and skirt assembly, and the multi-port cover be set as an assembled unit, with the bolts engaged. Failure to engage the bolts may result in distortion of the ring and improper fit of the ring to cover after the concrete is poured.
21. When pouring the concrete, hand shovel or trowel the concrete around the multi-port assembly to prevent the unit from moving or shifting, which can cause alignment problems and future maintenance problems.

Note: Do not stand on the multi-port before the concrete has set up.

22. Ramp or dome the concrete away from the POMECO Manhole cover. There should be a minimum of 1-inch slope to finish grade. This is to direct water flow away from the cover. (See Figure 7.)

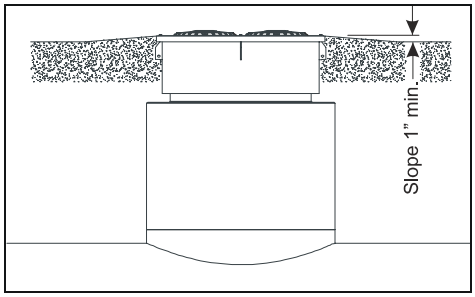

Figure 7

23. Remove the plastic after the concrete has set up.
24. After installation is complete, water test the multi-port fixture. The recommended water test procedures include:
    a) Spraying water on cover(s) for 5 to 10 minutes, using a commonly available watering device such as a lawn sprinkler.
    b) Standing water test, not to exceed ½" in water depth for a period of 5 to 10 minutes.

Note: The spill container consists of three components spill container ring, bellows, and bucket bottom. These parts are held together with stainless steel retaining bands.
DO NOT loosen the stainless steel retaining bands securing the bellows to the spill container ring or the spill container bottom. Loosening the retaining bands voids any and all warranties on this product.

Warning:
If the Manhole Cover is removed, for any reason, follow the Service and Maintenance instruction as noted. Always inspect and replace damaged o-rings and install new o-rings . Never reuse damaged o-rings as it may result in an improper seal.

Operation and Maintenance:
Annually: Inspect and clean the interior of the spill container and drain valve screen. Remove accumulated dirt and grit. Test the drain valve using CARB procedure TP-201.1C or TP-201.1D. If the drain valve passes testing no further maintenance required. If the drain valve fails testing, remove the valve, soak in water and use high-pressure air, if needed, to clean. Reinstall the drain valve to its proper position and test the valve with CARB procedure TP-201.1C or TP-201.1D. If problems persist, replace the drain valve with P/N 1DK-2100-EVR (specified torque 11.5 ft-lbs min to 13.5 ft-lbs max, 5/16-18 UN thread). The sealable cover (1SC) adjustment nut is set at the factory, but due to environmental conditions it may be necessary to adjust it to either improve sealing or ease cover removal.

Testing Spill Containers
Perform the California Test Procedures TP-201.1C or equivalent. Their Test Procedures will check the seals between the drain valve, nipple and rotatable adapter. To test the spill containers base and bellows fill the container with water. A drop in the water level of 1/16" or greater after one hour means that a leak exists. To determine where the leak is, look for a steady stream of bubbles coming from one of the joints or water leaking on the outside of the bucket. **NOTE:** Do not drain the water into the UST after the test is complete. Water must be disposed of per local requirements for hazardous waste. If the leak cannot be corrected the spill container should be replaced with another.

OPW/POMECO recommends periodic inspection of covers and seals as a part of the regularly scheduled maintenance program. If any of the seals are damaged they should be replaced. Only qualified, competent, well-trained technicians should perform maintenance. **Note:** Common sense and good judgment should always be exercised. The contractor's understanding of all related site conditions prior to starting the project is essential. If the contractor does not have a clear understanding of the required work and site conditions, the contractor is advised to seek clarification prior to starting any portion of the project.

Important: Leave these instructions with Station Operator as per CARB Requirements

Alternative Construction

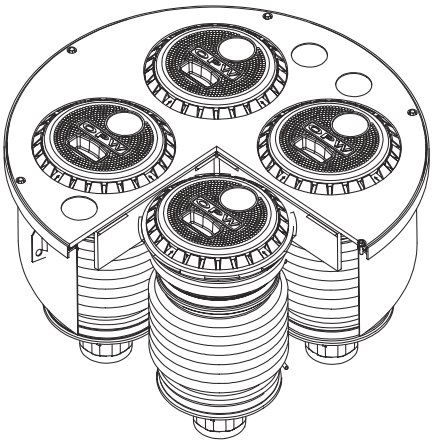

P.O. Box 405003 * Cincinnati, Ohio 45240-5003
1-800-422-2525 Domestically
513-870-3315 Internationally

Marketing Agent for POMECO by OPW, Inc.
Copyright, 2004 - OPW Fueling Components Inc., Cincinnati, OH
Printed in U.S.A. p/n H15225PA – 08/04

Figure L-1

POMECO Installation and Maintenance Instructions 6111-1400 Tank Bottom Protector

IMPORTANT: Please read these warnings and use the assembly instructions completely and carefully before starting. Failure to do so may cause product failure, or result in environmental contamination due to liquid leakage into the soil, creating hazardous spill conditions.

IMPORTANT: The POMECO Tank Bottom Protector is pre-assembled for your convenience and ease of installation. Check to make sure the unit is intact and undamaged and all parts have been supplied. Never substitute parts for those supplied. Doing so may cause product failure.

WARNING-DANGER: Using electrically operated equipment near gasoline or gasoline vapors may result in a fire or explosion, causing personal injury and property damage. Be sure that the working area is free from such hazards, and always use proper precautions.
NOTE: At all times when product is in the storage tank keep the riser pipe capped, so the vapors cannot escape into the environment.

Notice: OPW products must be used in compliance with applicable federal, state, and local laws and regulations. Product selection should be based on physical specifications and limitations and compatibility with the environment and material to be handled. All illustrations and specifications in this literature are based on the latest production information available at the time of publication. Prices, materials, and specification are subject to change at any time, and models may be discontinued at any time, in either case, without notice or obligation.

Standard Product Warranty

OPW warrants that products sold by it are free from defects in materials and workmanship for a period of one year from the date of manufacture by OPW (ECO products two years from date of manufacture.) Proof of purchase may be required. As the exclusive remedy under this limited warranty, OPW, will at its sole discretion, repair, replace, or issue credit for future orders for any product that may prove defective within the one year date of manufacture period (repairs, replacements, or credits may be subject to prorated warranty for remainder of the original warranty period, complete proper warranty claim documentation required.) This warranty shall not apply to any product that has been altered in any way, which has been repaired by any party other than a service representative authorized by OPW, or when failure is due to misuse, or improper installation or maintenance. OPW shall have no liability whatsoever for special, incidental or consequential damages to any party, and shall have no liability for the cost of labor, freight, excavation, clean up, downtime, removal, reinstallation, loss of profit, or any other cost or charges.
For any product certified to California 2001 standards, OPW warrants that product sold by it are free from defects in material and workmanship for a period of one year from date of manufacture or one year from date of registration of installation not to exceed 15 months from date of manufacture by OPW.

THIS WARRANTY IS IN LIEU OF ALL OTHER WARRANTIES, EXPRESS OR IMPLIED, AND SPECIFICALLY THE WARRANTIES OF MERCHANTABILITY AND FITNESS FOR A PARTICULAR PURPOSE. THERE ARE NO WARRANTIES, WHICH EXTEND BEYOND THE DESCRIPTION ON THE FACE HEREOF.

Tank Bottom Protector:

The POMECO Tank Bottom Protector is designed to protect the Underground Storage Tank from damage due to the tank measuring stick being dropped into the tank to measure the fluid level.

POMECO Tank Bottom Installation Instruction

1. Check the distance from the bottom of the fill tube to the bottom of the tank. Verify that this distance is in conformance with manufacturer's recommendations and Local Codes. Remove the drop tube from the tank.

2. Using a # 11 Drill (0.191") - Drill a hole into the fill tube about 1/2" above and 1" to 1 1/16 over from point "A" (see figures 1 and 2). Keep in mind that the **POMECO Tank Bottom Protector** must rest on the bottom of the tank.

3. Insert the **POMECO Tank Bottom Protector** and line up the # 11 hole in the sliding rod guide with the corresponding hole just drilled in the drop tube. Make sure that point "A" is clear for future measurements of the drop tube's length. (See figure 2)

4. Attach the **POMECO Tank Bottom Protector** with the pop rivet supplied. Drill two more # 11 holes into the drop tube and sliding rod guide at the same time. Install supplied pop rivets into new holes.

5. Check to ensure that the **POMECO Tank Bottom Protector** slides up and down without binding.

6. Reinstall fill tube into the tank.

*Check local codes and regulation for proper dimension

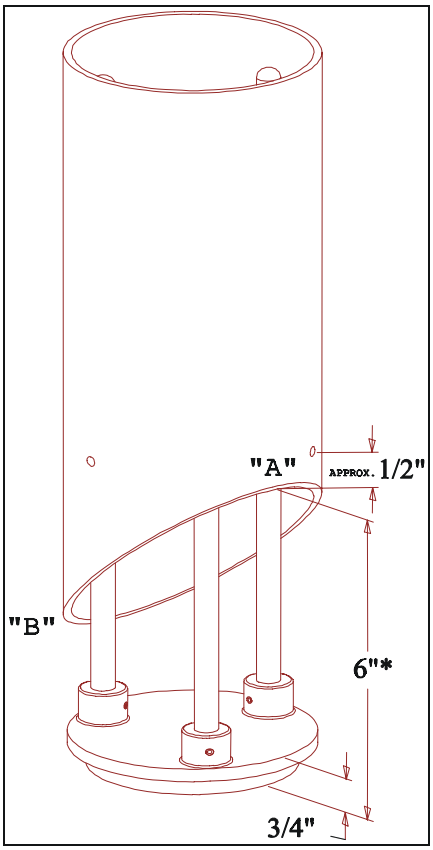

Figure 1

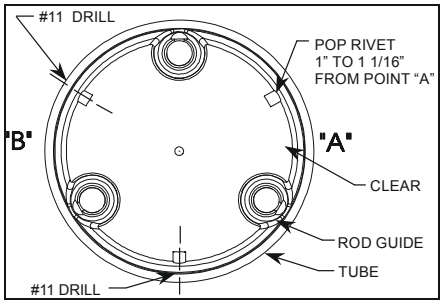

Figure 2

A DOVER COMPANY
P.O. Box 405003 * Cincinnati, Ohio 45240-5003
1-800-422-2525 Domestically
513-870-3315 Internationally
www.opw-fc.com
Marketing Agent for POMECO by OPW, Inc.
Copyright, 2002 - OPW Fueling Components Inc., Cincinnati, OH
Printed in U.S.A. p/n H14977PA – 08/02

Figure M-1

Husky Model 4885 2-Inch Threaded Pressure/Vacuum Vent Valve

PRESSURE/VACUUM VENT MODEL 4885 INSTALLATION AND MAINTENANCE INSTRUCTIONS

INSTALLATION

The P/V Vent is designed to fit on top of a 2" vent pipe. Remove the P/V Vent from the carton and visually inspect for any shipping damage.

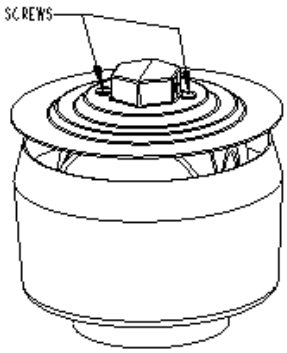

Model 4885 Thread-On P/V Vent

Apply fuel resistant pipe sealant to the threads on the 2" vent stack. Screw the P/V Vent onto the vent stack and tighten to a range of 20 to 50 ft-lbs with a suitable wrench. DO NOT OVER-TIGHTEN. Periodic maintenance is recommended (see below).

MAINTENANCE

Annually inspect the P/V Vent valve for foreign objects without removing the P/V Vent valve from the vent pipe by using the following procedure:

1. Remove the screws that hold the top cover on.
2. Remove any debris that might be sitting inside the lower cover.
3. Check the drain holes in the lower cover for blockage.
4. The two (2) screens should not be removed.
5. Reinstall the top cover and retaining screws.
6. Tighten the screws firmly.

NOTE: DO NOT ALTER OR COVER THE P/V VENT

TESTING CRITERIA

Leak rate: Pressure = .05 CFH at 2" WC, Vacuum = .21 CFH at -4" WC.
Cracking Pressure: 2 ½" to 3 ½" WC, Vacuum = -6" to -10" WC.
Per TP-201.1E and of applicable Phase 1 E.O.

HUSKY CORPORATION • 2325 HUSKY WAY • PACIFIC, MO 63069
www.husky.com **PHONE: 800-325-3558**

009041 – 6 9/19/03
(REVERSE SIDE IS 009063)

PRESSURE VACUUM VENT WARRANTY INFORMATION

Husky Corporation will, at its option, repair, replace, or credit the purchase price of any Husky manufactured Pressure Vacuum Vent which proves upon examination by Husky, to be defective in material and/or workmanship within EIGHTEEN (18) MONTHS from the date of shipment for any Husky Pressure Vacuum Vent, except as otherwise provided herein. For all other Husky manufactured product, see Husky Form No. PS2002-Term (4/15/02) at www. husky.com.

The warranty period on repaired or replacement product is only for the remainder of the warranty period. Buyer must return the products to Husky, transportation charges prepaid. This Warranty does not apply to equipment or parts which have been installed improperly, damaged by misuse, improper operation or maintenance, or which are altered or repaired in any way other than by Husky.

The Warranty provisions contained herein apply ONLY to original purchasers and subsequent commercial purchasers within the warranty period who use the equipment for commercial or industrial purposes. THERE ARE NO OTHER WARRANTIES OF MERCHANTABILITY, FITNESS FOR A PARTICULAR PURPOSE, OR OTHERWISE, AND ANY OTHER SUCH WARRANTIES ARE HEREBY SPECIFICALLY DISCLAIMED.

Husky assumes NO LIABILITY for labor charges or other costs incurred by Buyer incidental to the service, adjustment, repair, return, removal or replacement of products. HUSKY ASSUMES NO LIABILITY FOR ANY INCIDENTAL, CONSEQUENTIAL, OR OTHER DAMAGES UNDER ANY WARRANTY, EXPRESS OR IMPLIED, AND ALL SUCH LIABILTY IS HEREBY EXPRESSLY EXCLUDED.

Husky reserves the right to change or improve the design of any Husky fuel dispensing equipment without assuming any obligations to modify any fuel dispensing equipment previously manufactured.

HUSKY CORPORATION • 2325 HUSKY WAY • PACIFIC, MO 63069
www.husky.com **PHONE: 800-325-3558**
009063– 0 6/5/02

Figure M-2

OPW Installation and Maintenance Instructions

OPW 623V Pressure / Vacuum Vent Valve

IMPORTANT: Please read these warnings and use the assembly instructions completely and carefully before starting. Failure to do so may cause product failure, or result in environmental contamination due to liquid leakage into the soil, creating hazardous spill conditions.

IMPORTANT: The OPW 623V Pressure / Vacuum vent is pre-assembled for your convenience and ease of installation. Check to make sure the unit is intact and undamaged and all parts have been supplied. Never substitute parts for those supplied. Doing so may cause product failure.

WARNING-DANGER: Using electrically operated equipment near gasoline or gasoline vapors may result in a fire or explosion, causing personal injury and property damage. Be sure that the working area is free from such hazards, and always use proper precautions.
NOTE: At all times when product is in the storage tank keep the vent pipe capped, so the vapors cannot escape into the environment.

Notice: OPW products must be used in compliance with applicable federal, state, and local laws and regulations. Product selection should be based on physical specifications and limitations and compatibility with the environment and material to be handled. All illustrations and specifications in this literature are based on the latest production information available at the time of publication. Prices, materials, and specification are subject to change at any time, and models may be discontinued at any time, in either case, without notice or obligation.

Standard Product Warranty

OPW warrants that products sold by it are free from defects in materials and workmanship for a period of one year from the date of manufacture by OPW (ECO products two years from date of manufacture.) Proof of purchase may be required. As the exclusive remedy under this limited warranty, OPW, will at its sole discretion, repair, replace, or issue credit for future orders for any product that may prove defective within the one year date of manufacture period (repairs, replacements, or credits may be subject to prorated warranty for remainder of the original warranty period, complete proper warranty claim documentation required.) This warranty shall not apply to any product that has been altered in any way, which has been repaired by any party other than a service representative authorized by OPW, or when failure is due to misuse, or improper installation or maintenance. OPW shall have no liability whatsoever for special, incidental or consequential damages to any party, and shall have no liability for the cost of labor, freight, excavation, clean up, downtime, removal, reinstallation, loss of profit, or any other cost or charges.

For any product certified to California 2001 standards, OPW warrants that product sold by it are free from defects in material and workmanship for a period of one year from date of manufacture or one year from date of registration of installation not to exceed 15 months from date of manufacture by OPW.

THIS WARRANTY IS IN LIEU OF ALL OTHER WARRANTIES, EXPRESS OR IMPLIED, AND SPECIFICALLY THE WARRANTIES OF MERCHANTABILITY AND FITNESS FOR A PARTICULAR PURPOSE. THERE ARE NO WARRANTIES, WHICH EXTEND BEYOND THE DESCRIPTION ON THE FACE HEREOF.

623V Series Performance Specifications:

This Pressure / Vacuum vent has been manufactured and tested to the following specifications: Pressure leak rate not to exceed 0.05 CFH at 2” W.C. Vacuum leak rate not to exceed 0.21 CFH at -4” W.C. The cracking pressure to be 3” W.C. +/- 0.5 and cracking vacuum to be -8” W.C. +/- 2.0. Tested using CARB Test Procedure TP-201.1E or applicable Phase I Executive Order.

Torque Specification:
Vent Assembly 2” NPT, 35 ft-lbs minimum to 55 ft-lbs maximum.

OPW 623V Pressure / Vacuum Vent Valve INSTALLATION INSTRUCTIONS:

Step1.
Deburr and thoroughly clean vent pipe. Apply pipe dope to vent pipe threads. Pipe dope to be a non-hardening, gasoline resistant pipe thread seal compound.

Step 2: (See Figure 1)
Screw the vent assembly onto the vent pipe and torque to 35 ft.-lbs minimum to 55 ft-lbs maximum. Use the flats on the pipe adaptor only, **Do not wrench on the composite valve assembly.**

NOTE: NEVER PAINT OR COVER THE VENT

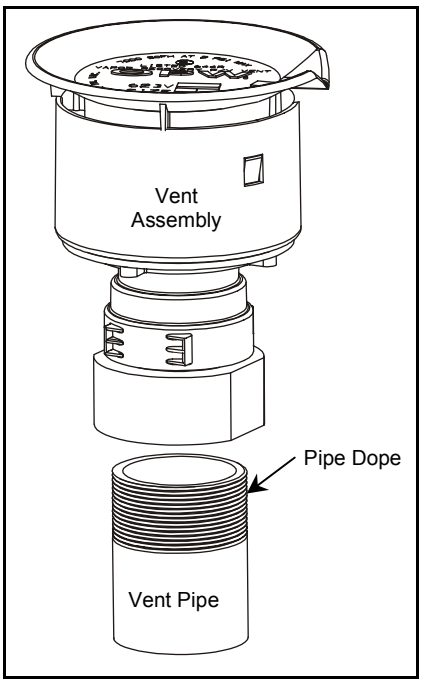

Figure 1

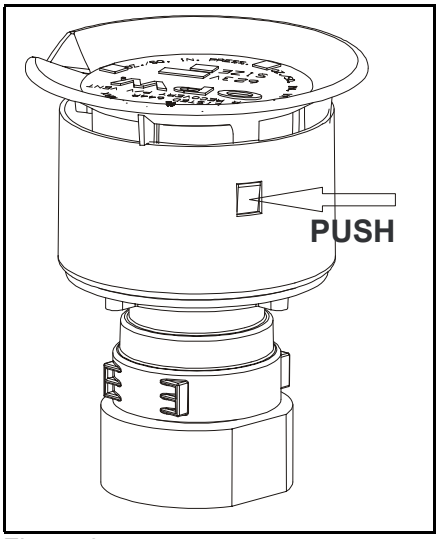

Figure 2

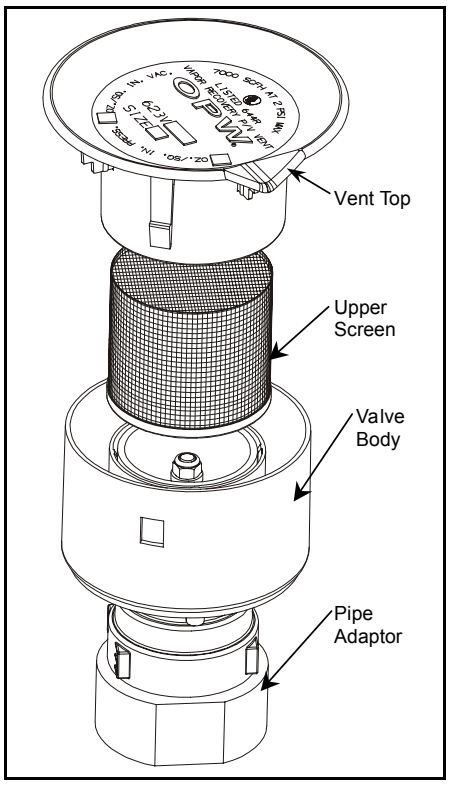

Figure 3

Operation and Maintenance:
Annual maintenance is required to keep the vent operating satisfactorily. Remove and inspect filter screens – clean or replace as necessary.

Upper Screen Maintenance
1. Remove vent top by depressing tabs as indicated in Fig. 2, and lift top upward. Screen will slip up and out of valve.
2. Clean or replace filter screen (P/N H14895M) as necessary and reinstall Fig. 3.
3. Reinstall vent top by reinserting into the body. Be sure the tabs are inside the valve body, and then rotate top until the tabs snap into place

Lower Screen Maintenance

Note: Do not remove the pipe adaptor from the vent pipe to service the lower filter screen.

1. Remove valve assembly from the pipe adaptor. Grip assembly at the flats just above the pipe adaptor and unscrew. (Fig. 4) Wrench C05102M can be used for this purpose.
2. Lift the filter screen out and clean or replace (P/N C05086M) as necessary.
3. Reinstall filter screen in the pipe adaptor (see Fig. 4 for orientation).
4. Reinstall valve assembly on pipe adaptor and tighten until it stops. Do not wrench valve assembly except with P/N C05102M

Important: Leave these instructions with Station Operator.

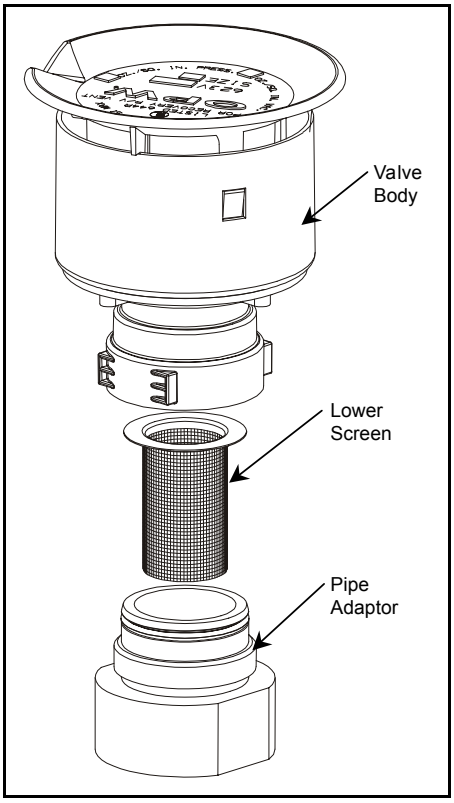

Figure 4

P.O. Box 405003 * Cincinnati, Ohio 45240-5003
1-800-422-2525 Domestically
513-870-3315 Internationally
www.opw-fc.com

Copyright, 2002 - OPW Fueling Components Inc., Cincinnati, OH
Printed in U.S.A. p/n H14898PA - 10/02

Figure N-1

Morrison Brothers Tank Gauge Port Components
305XPA & 305XPA1100AKEVR (cap and adaptor kit)
305 & 305-0200AAEVR (replacement adaptor)
305XP & 305XP-110ACEVR (replacement cap)

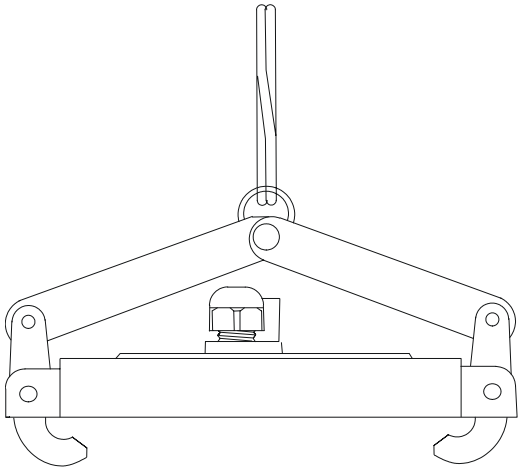

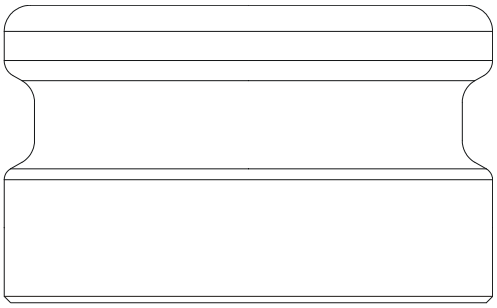

305XP Cap

Installation Instructions –

1. Apply a fuel resistant, non-hardening, anti-seize sealant (not adhesive) to cable connector threads. Follow manufacturer's instructions for installation of monitoring system.
2. Set cap on adapter
3. Push down on lever arms.

305 Adapter

Installation Instructions –

1. Apply a fuel resistant, non-hardening, anti-seize sealant (not adhesive) to body threads.
2. Thread body on to riser pipe. Torque to 23-26 ft.-lb.

Morrison Bros. Co.
24th & Elm St.
Dubuque, IA 52001

WARRANTY CARD

All Morrison products are thoroughly tested before shipment and only material found to be defective in manufacture will be replaced. Claims must be made within one year from the date of installation, and Morrison Bros. Co. will not allow claims for labor or consequential damage resulting from purchase, installation, or misapplication of the product.

Expiration Date: _____

Item No: _____

This card must be returned to manufacturer for warranty to be honored.

TO BE FILLED OUT BY
INSTALLER/MAINTENANCE PERSON

Name of Maintenance Service Company:
_____

Address:
_____

_____

Date of Install: _____

Name and Location of Install:
_____

_____

Figure N-2

Ever-Tite Tank Gauge Cap and Adaptor

Ever-Tite #4097AGBR Adaptor with Hex

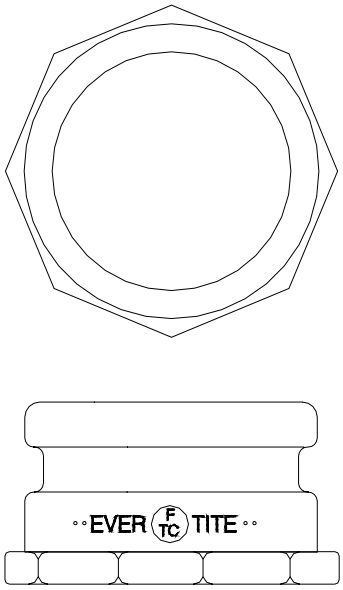

Ever-Tite #4097AGMBRNL Adaptor

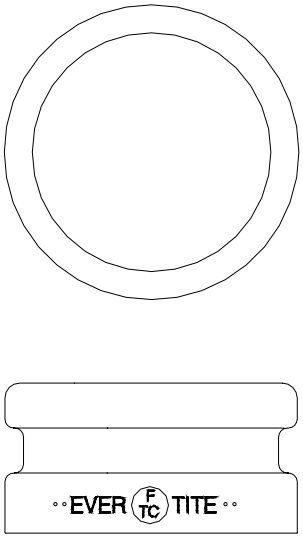

Ever-Tite #4097MBR Cap

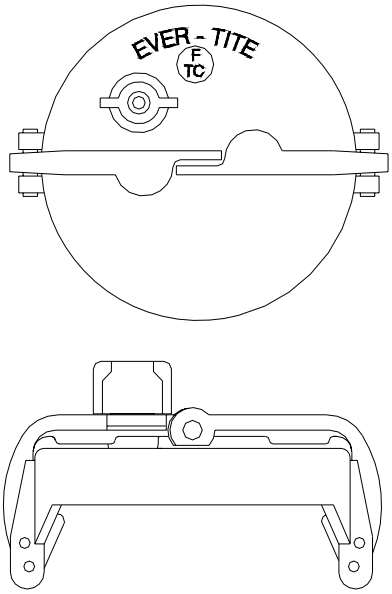

Installation Instructions

1. Thread by hand to avoid cross threading.

2. Tighten adaptor to 75 to 100 foot-pounds torque.

Warranty
The Company warrants its goods to be free from defects in material and workmanship as represented in our catalogs or applicable drawings and specifications agreed to by us at the time of acceptance of the order by Ever-Tite Coupling Products. Our obligation under this warranty shall be limited to repairing or replenishing any parts which shall, within one (1) year after shipment to the original purchaser, be demonstrated to be defective. This warranty is expressly in lieu of all other warranties, express or implied, including the warranties of merchantability and fitness. No person, firm or corporation is authorized to assume for us any other liability in connection with the sale of these goods.

Figure N-3

Veeder-Root P/N 312020-952 Tank Gauge Cap and Adaptor

Original Identification Method **New Identification Method**

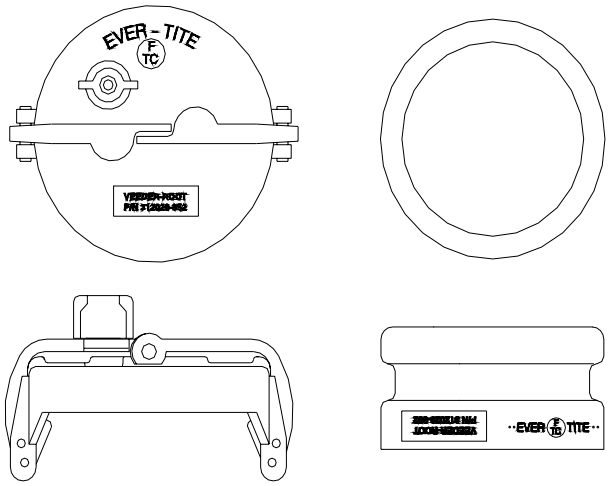

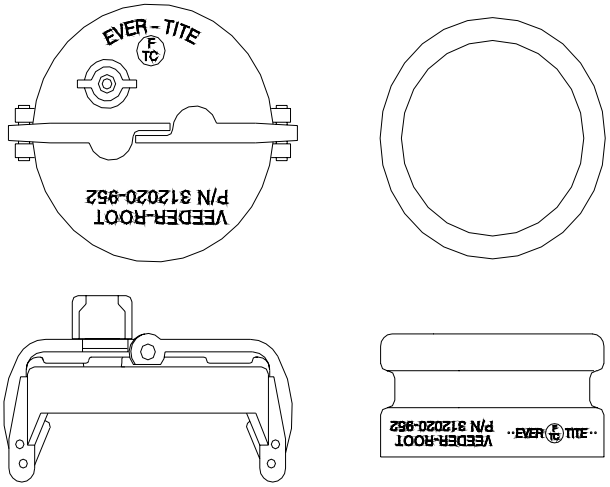

Installation Instructions

Install a CARB approved machined adaptor onto the riser. Apply a gasoline-resistant, non-hardening thread sealant to the threads of the riser adaptor only. Next screw the ring from the Veeder-Root kit (P/N 312020-952) onto the riser adaptor by hand until the gasket contacts the sealing surface. Then use a torque wrench attached to an appropriate strap wrench (K-D Specialty tools nylon strap oil filter wrench P/N 3149, or equivalent) and tighten the ring to 35 - 45 ft-lbs. Loosen the cord grip nut and push the cable through the cap and cord grip, then clamp the cap onto the ring.

Warranty

We warrant that this product will be free from defects in materials and workmanship for a period of 1 year from the date of installation or 24 months from the date of invoice, whichever occurs first. During the warranty period, we or our representative will repair or replace the product, if determined by us to be defective, at the location where the product is in use and at no charge to the purchaser.

We shall not be responsible for any expenses incurred by the user.

This warranty applies only when the product is installed in accordance with Veeder-Root's specifications, and a Warranty Registration and Checkout Form has been filed with Veeder-Root by an Authorized Veeder-Root Distributor. This warranty will not apply to any product which has been subjected to misuse, negligence or accident; or misapplied; or used in violation of product manuals, instructions or warnings; or modified or repaired by unauthorized persons; or improperly installed.