California Environmental Protection Agency

Air Resources Board

ARB Approved

Installation, Operation, and Maintenance Manual

For the OPW Phase I Vapor Recovery System
As Certified by Executive Order VR-102-N

NOTICE:

The **ARB Approved Installation, Operation and Maintenance Manual for the OPW Phase I EVR System** describes the tools and methods required to install the OPW Phase I EVR System. Unless specified otherwise, only technicians that are trained and certified by OPW (i.e. OPW Certified Technicians) are able to perform installation, maintenance or repairs of components manufactured by OPW or the warranty will be void. A list of OPW Certified Technicians can be viewed at http://www.opw-fc.com .

To schedule a training class, OPW can be contacted at the following:

OPW Fueling Components
Phone: 1-800-422-2525
Web: www.opw-fc.com

It is the responsibility of each OPW Certified Technician to be familiar with the current requirements of state, federal and local codes for installation and repair of gasoline dispensing equipment. It is also the responsibility of the OPW Certified Technician to be aware of all necessary safety precautions and site safety requirements to assure a safe and trouble free installation.

Only technicians that are trained and certified by FFS (i.e. FFS Certified Technicians) are able to perform installation, maintenance or repairs of components manufactured by FFS or the warranty will be void. A list of FFS Certified Technicians can be viewed at http://www.franklinfueling.com/service/.

To schedule a training class, FFS can be contacted at the following:

Stan Brodecki, Allan Busch, or Steve Langlie
Enhanced Vapor Recovery Systems
Franklin Fueling Systems
Phone: 800-225-9787
Email: brodecki@franklinfueling.com
busch@franklinfueling.com
langlie@franklinfueling.com

It is the responsibility of each FFS Certified Technician to be familiar with the current requirements of state, federal and local codes for installation and repair of gasoline dispensing equipment. It is also the responsibility of the FFS Certified Technician to be aware of all necessary safety precautions and site safety requirements to assure a safe and trouble free installation.

In addition to the requirements included in this manual, the contractor is responsible for providing the warranty tag, included with each component, to the service station owner/operator at the time of installation.

Table of Contents

OPW Installation, Operating and Maintenance Manual

Equipment	Manufacturer/Model Number	Page
Summary of Guidelines for Maintenance Activities		**5**
Equipment Installation Checklist		**9**
Typical Installation (Product Side)		**11**
Typical Installation (Vapor Side)		**12**
Typical OPW/POMECO Double Fill Configuration		**13**
Typical Remote Fill Spill Container Configuration		**14**
Typical Remote Fill Tank Top Configuration		**15**
Typical Remote Fuel Additive Configuration		**16**
Spill Containers	Spill Container OPW 1-Series	**17**
	OPW / Pomeco Container Bellows Capacity – 5, 7.5, or 15 gallons Type of Base – Composite or Cast Iron	
	Double Wall Spill Container	**21**
Replacement Drain Valve Kit	OPW 1DK-2100	**26**
Dust Caps	OPW 634TT-EVR (product) OPW 1711T-EVR (vapor)	**29**
	OPW 634LPC (product) OPW 1711LPC (vapor)	**31**
	CompX CSP1-634LPC (product) CompX CSP3-1711LPC (vapor) CompX CSP2-634LPC (product) CompX CSP4-1711LPC (vapor)	**33**
Product Adaptor	OPW 61SALP	**35**
Vapor Adaptor	OPW 61VSA	**38**

Jack Screw Kit	OPW	61JSK-4410, -44CB	**41**
	OPW	71JSK-44MA	
	OPW	61JSK-4RMT	**47**
	OPW	71JSK-4RMT	
	OPW	61JSK-4410 (206206 Rev. C)	**51**
Face Seal Adaptor	OPW	FSA-400	**55**
	OPW	FSA-400-S	
Drop Tube	OPW	61T (various lengths)	**58**
Drop Tube Overfill Prevention Device[1]	OPW	61SO	**60**
	OPW	71SO	**69**
Double Fill	(Installation Instructions)		**86**
Tank Bottom Protector[1]	OPW/Pomeco 6111-1400		**92**
Pressure/Vacuum Vent Valve	Husky	5885	**95**
Pressure/Vacuum Vent Valve	FFS	PV-Zero	**98**
Tank Gauge Port Adaptor and Cap	Morrison Brothers 305XPA1100AKEVR (cap and adaptor kit) Morrison Brothers 305-0200AAEVR (replacement adaptor) Morrison Brothers 305XP-110ACEVR (replacement cap)		**110**
	Veeder-Root 312020-952 (cap & adaptor)		**111**
	OPW 62M Cap and Adaptor		**112**

[1] If these components are installed or required by regulations of other agencies, only those components and model numbers specified above shall be installed or used.

Summary of Guidelines for Maintenance Activities Required of the OPW Phase I Vapor Recovery System [1]

Component	Interval[2]	Maintenance To Be Performed
Pressure/Vacuum Vent Valve		
Husky 5885	Annual	1. Remove screws that hold top cover on. 2. Remove any debris that might be sitting inside the lower cover. 3. Check the drain holes in the lower cover for blockage. 4. Do not remove the two (2) screens. 5. Reinstall the top cover and retaining screws. 6. Tighten the screws firmly.
FFS PV-Zero	Annual	1. Visual inspect housing, pipe, fittings and rain cap for obvious signs of damage, missing parts or fluid leaks. 2. Visually inspect the rain cap, from ground level, for signs of bird nests or insect activity. 3. Every **year**, drain and inspect the fill fluid per the **Fluid Inspection Procedure**.
Spill Containers and Drain Valves OPW/POMECO "All Models"	Annual	Annually, clean the interior of the container and drain valve. Annually, remove accumulated dirt and grit. If the drain valve becomes clogged, remove the valve, soak in water, and use high-pressure air to clean. If valve is removed, reinstall to its proper position and perform ARB Procedure TP-201.1C or TP-201.1D as applicable.
Dust Caps OPW "All Models"	Annual	Visually inspect the seal in cap and replace if damaged or missing.
CompX "All Models"	Annual	Inspect dust cap seal for nicks, tears or deformations and replace if necessary.
Product Adaptor OPW 61SALP	Annual	Visually inspect the adaptor for large dents, cracks, or deformations.

[1] These maintenance requirements shall not circumvent use of the manufacturer's installation and maintenance instructions. Maintenance contractors or owner/operators shall refer to the manufacturers complete installation and maintenance instructions found herein for the OPW Phase I System to ensure that all maintenance and torque requirements are met.

[2] Maintenance must be conducted within the interval specified from the date of installation and at least within the specified interval thereafter.

Summary of Guidelines for Maintenance Activities Required of the OPW Phase I Vapor Recovery System [2]

Component	Interval[2]	Maintenance To Be Performed
Vapor Adaptor OPW 61VSA	Annual	Visually inspect the adaptor for large dents, cracks, or deformations. Check the vapor poppet for damage and ensure that the poppet seats evenly with the adaptor. Clean out any foreign objects from the vapor poppet's seal and seal surface if necessary. Test the poppet seal by applying a soap solution to the poppet while the underground storage tank is under a positive gauge pressure of at least 2.00 inches W.C and inspect for the presence of bubbles. If the facility continuously operates under vacuum, a bag test may be used by sealing a clear plastic bag to the adaptor's sides. If no bubbles appear at the poppet under positive pressure or the bag test shows no signs of the bag collapsing, no further maintenance is required. If bubbles appeared around the poppet seal or the bag collapsed, replace the poppet components and re-test.
Jack Screw Kit OPW 61JSK OPW 71JSK	Annual	Visually inspect the Jack Screw for proper alignment and installation.
Face Seal Adaptor OPW FSA-400 OPW FSA-400-S	None	No maintenance is required for this product.
Drop Tubes OPW 61T	Annual	Visually inspect Drop Tube to see if it is installed and ensure that the bottom of tube is within 6 inches of the bottom of tank. Test the drop tube seal with ARB procedure TP-201.1C or TP-201.1D as applicable. If the drop tube seal passes testing, no further maintenance is required. If the drop tube seal fails testing, replace the drop tube seal with OPW P/N: H11931M for 4" Tubes. Re-test the drop tube seal with ARB procedure TP-201.1C or TP-201.1D as applicable.

[2] These maintenance requirements shall not circumvent use of the manufacturer's installation and maintenance instructions. Maintenance contractors or owner/operators shall refer to the manufacturers complete installation and maintenance instructions found herein for the OPW Phase I System to ensure that all maintenance and torque requirements are met.

[2] Maintenance must be conducted within the interval specified from the date of installation and at least within the specified interval thereafter.

Summary of Guidelines for Maintenance Activities Required of the OPW Phase I Vapor Recovery System [3]

Component	Interval[2]	Maintenance To Be Performed
Drop Tube Overfill Prevention Device OPW 61SO	Annual	Annually, inspect the flapper in the 61SO to see that it is open by looking down the drop tube opening. Test the 61SO drop tube seals with ARB procedure TP-201.1D. If the drop tube passes testing, no further maintenance is required. If the drop tube fails testing, replace the drop tube seal with OPW P/N: H11931M for 4" Tubes. Re-test the 61SO drop tube with ARB procedure TP-201.1D. If this does not correct the leak, the 61SO needs to be replaced.
OPW 71SO	Annual	Annually, inspect the flapper in the 71SO to see that it is open by looking down the drop tube opening. Test the 71SO drop tube seals with ARB procedure TP-201.1D. If the drop tube seal passes testing, no further maintenance is required. If the drop tube fails testing, replace the drop tube seal with OPW P/N: H11931M for 4" Tubes. Re-test the 71SO drop tube with ARB procedure TP-201.1D. The lower tube o-ring seal OPW P/N: H14840M can also be replaced. If this does not correct the leak the 71SO needs to be replaced.
Tank Bottom Protector OPW/POMECO 6111-1400	None	No maintenance is required for this product.
Tank Gauge Port Components **OPW 62M** Morrison Brothers 305 Veeder-Root 312020-952	Annual	Visually inspect cap to see that it is not missing any seals and is properly installed.

[3] These maintenance requirements shall not circumvent use of the manufacturer's installation and maintenance instructions. Maintenance contractors or owner/operators shall refer to the manufacturers complete installation and maintenance instructions found herein for the OPW Phase I System to ensure that all maintenance and torque requirements are met.

[2] Maintenance must be conducted within the interval specified from the date of installation and at least within the specified interval thereafter.

OPW
EVR Phase I Equipment
Installation Check List

Site Identification Information

Site Address:

_____

_____

_____

Installing Company: _____

Certified Technician Number: _____

Technician's Name **(Print Clearly)**: _____

Technician's Signature: _____

Date of Installation: _____

OPW
EVR Phase I Equipment
Installation Check List

Components Installed

OPW 1-Series EVR Fill Spill Containment Bucket	Yes ___	No___
OPW 1-Series EVR Vapor Spill Containment Bucket	Yes ___	No___
OPW FSA-400, or FSA-400-S Threaded Riser Adaptor (Face Seal Adaptor)		
On Fill Riser (Required)	Yes ___	No ___
On Tank Probe Riser (Required)	Yes ___	No ___
On Vapor Riser (Optional)	Yes ___	No ___
OPW 61SO Series Overfill Prevention Valve	Yes ___	No ___
OPW 71SO Series Overfill Prevention Valve	Yes ___	No ___
OPW 61T Series Straight Drop Tube	Yes ___	No ___
OPW 61JSK Jack Screw Assembly		
61JSK-4410 (Use with composite base spill bucket)	Yes ___	No ___
61JSK-44CB (Use with cast iron base spill bucket)	Yes ___	No ___
61JSK-4RMT (Only used on Remote-Fill Applications)	Yes ___	No ___
71JSK-44MA (For use with E85 fueling facilities)	Yes ___	No ___
71JSK-4RMT (For use with E85 fueling facilities)	Yes ___	No ___
OPW 61VSA Vapor Swivel Adaptor	Yes ___	No ___
OPW 61SALP Fill Swivel Adaptor	Yes ___	No ___
OPW 634TT Top Seal EVR Fill Cap	Yes ___	No ___
OPW 1711T Top Seal EVR Vapor Cap	Yes ___	No ___
OPW 634LPC Low Profile Top Seal EVR Fill Cap	Yes ___	No ___
OPW 1711LPC Low Profile Top Seal EVR Vapor Cap	Yes ___	No ___
CompX CSP1-634LPC TuBAR Tank Commander Fill Cap	Yes ___	No ___
CompX CSP3-1711LPC TuBAR Tank Commander Vapor Cap	Yes ___	No ___
CompX CSP2-634LPC Padlock Tank Commander Fill Cap	Yes ___	No ___
CompX CSP4-1711LPC Padlock Tank Commander Vapor Cap	Yes ___	No ___
OPW 233 Extractor	Yes ___	No ___
OPW 53VML Ball Float Vent Valve	Yes ___	No ___
OPW 30MV Ball Float Vent Valve	Yes ___	No ___
OPW 62M Monitoring Probe Caps	Yes ___	No ___

Installation Acknowledgment

Installed OPW FSA-400 (-S) Threaded Riser Adaptor (Face Seal Adaptor) on fill riser and tightened to _____ ft. lb.

Thread sealant compound used_____

Installed OPW FSA-400 (-S) Threaded Riser Adaptor (Face Seal Adaptor) on tank probe riser and tightened to _____ ft. lb.

Thread sealant compound used_____

Optional

Installed OPW FSA-400 (-S) Threaded Riser Adaptor (Face Seal Adaptor) on vapor riser and tightened to _____ ft. lb.

Thread sealant compound used_____

Installed OPW 2100 Series ____, 3100 Series ____, or 500 Series ___ Fill spill containment bucket onto FSA-400 attached to fill riser and tightened to _____ ft. lb.

Thread sealant compound used_____

Installed OPW 2100 Series ____, 3100 Series ____, or 500 Series ____ vapor spill containment bucket onto vapor riser and tightened to _____ ft. lb.

Thread sealant compound used_____

Assembled OPW 61SO Series overfill prevention valve
Used OPW supplied epoxy Yes ___ No ___
Applied epoxy: To upper 1” inside of top tube, under cinch head bolts and lock washers, on threads of valve body at lower tube connection.
Yes ___ No ___
Allowed epoxy to cure for 24 hours before exposure to fuel or vapor
Yes ___ No ___
Installed OPW 61SO Series overfill prevention valve into fill spill containment bucket.
Yes ___ No ___

Assembled OPW 71SO Series overfill prevention valve Yes ___ No ___

Installed OPW 71SO Series overfill prevention valve into fill spill containment bucket
Yes ___ No ___

Alternative to 61SO
Installed OPW 61T Straight Drop Tube into fill spill containment bucket. Yes ___ No ___

Installed OPW 61JSK Jack Screw assembly on top of 61SO Series overfill prevention valve or on top of 61T Series Straight Drop Tube. Yes ___ No ___
Lock-Tite applied to screws Yes ___ No ___
Screws tightened to _____ ft. lb.

Installed faced off 4” NPT pipe nipple in fill spill containment bucket and tightened nipple to _____ ft. lb.
Thread sealant compound used _____
Tool used to install nipple _____

Installed faced off 4” NPT pipe nipple in vapor spill containment bucket and tightened nipple to _____ ft. lb.
Thread sealant compound used _____
Tool used to install nipple _____

Installed OPW 61 SALP Fill Swivel Adaptor onto faced off 4” NPT pipe nipple in fill spill containment bucket and tightened fill adaptor to _____ ft. lb.
Thread sealant compound used _____
Tool used to install nipple _____

Installed OPW 61 VSA Vapor Swivel Adaptor onto faced off 4” NPT pipe nipple in vapor spill containment bucket and tightened vapor adaptor to _____ ft. lb.
Thread sealant compound used _____
Tool used to install nipple _____

OPW 61 SA-Tool used to install OPW components Yes ___ No ___

Typical Product Installation Using OPW System

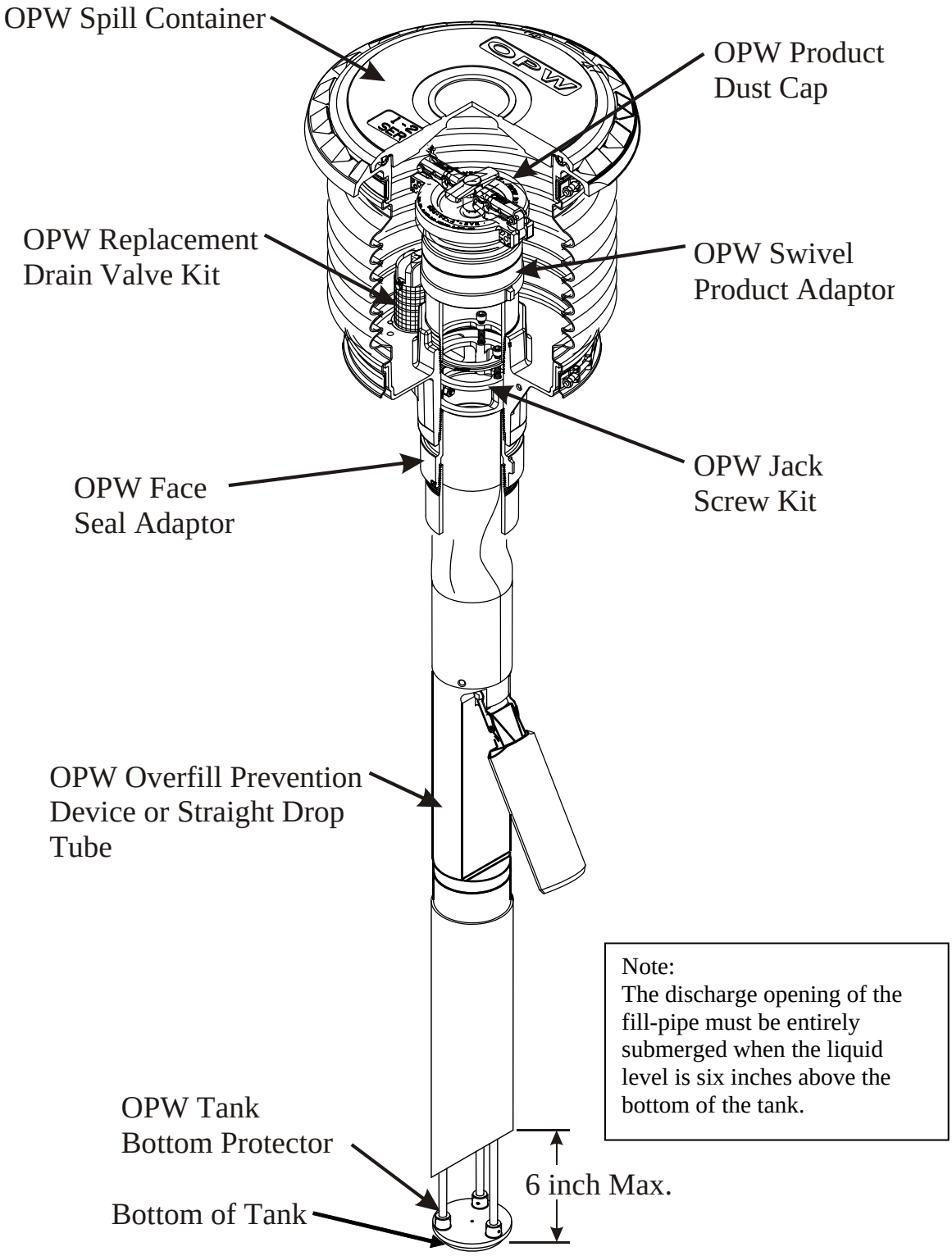

Note:
The discharge opening of the fill-pipe must be entirely submerged when the liquid level is six inches above the bottom of the tank.

Typical Vapor Installation Using OPW System

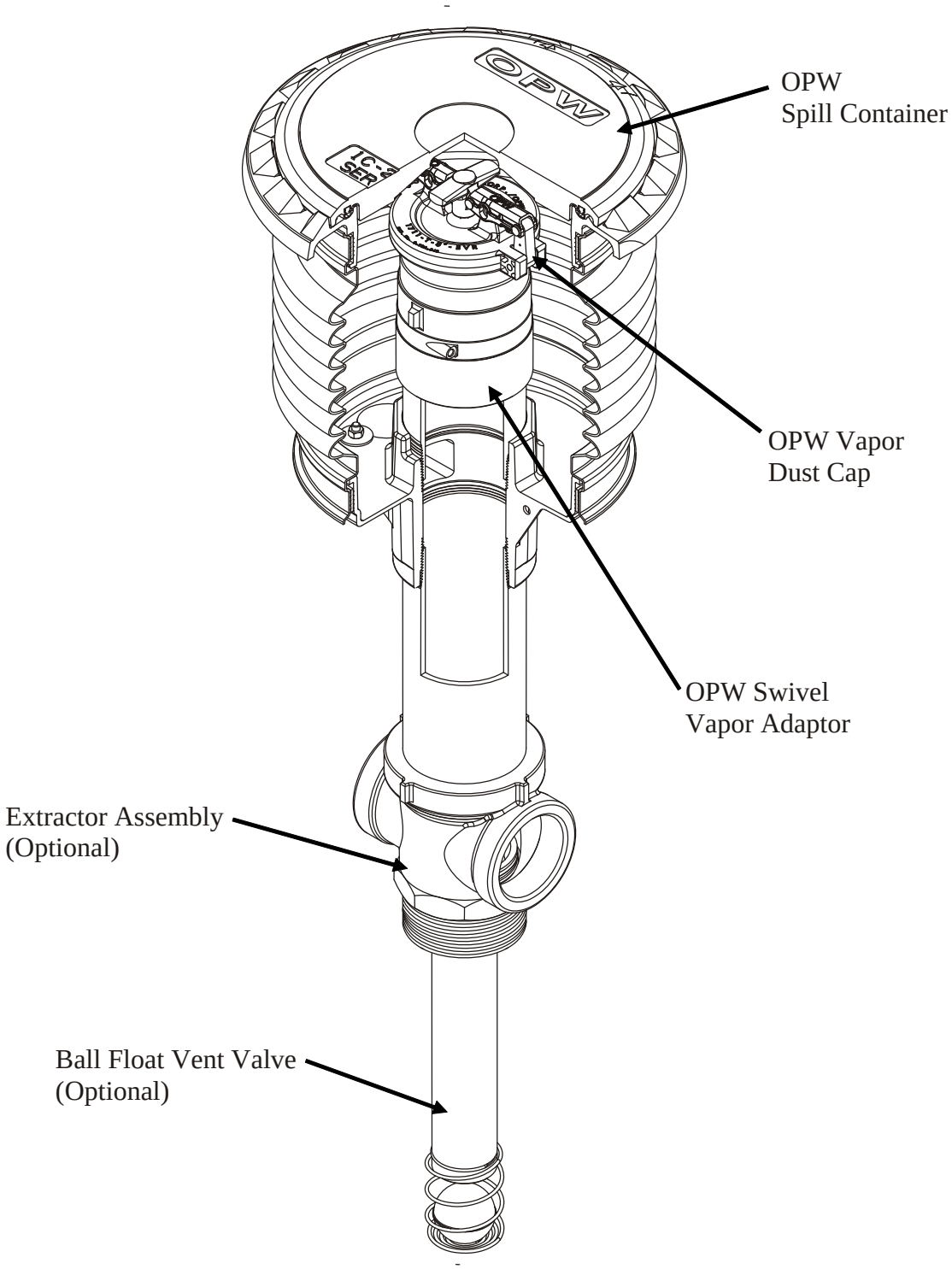

Typical OPW/POMECO Double Fill Configuration

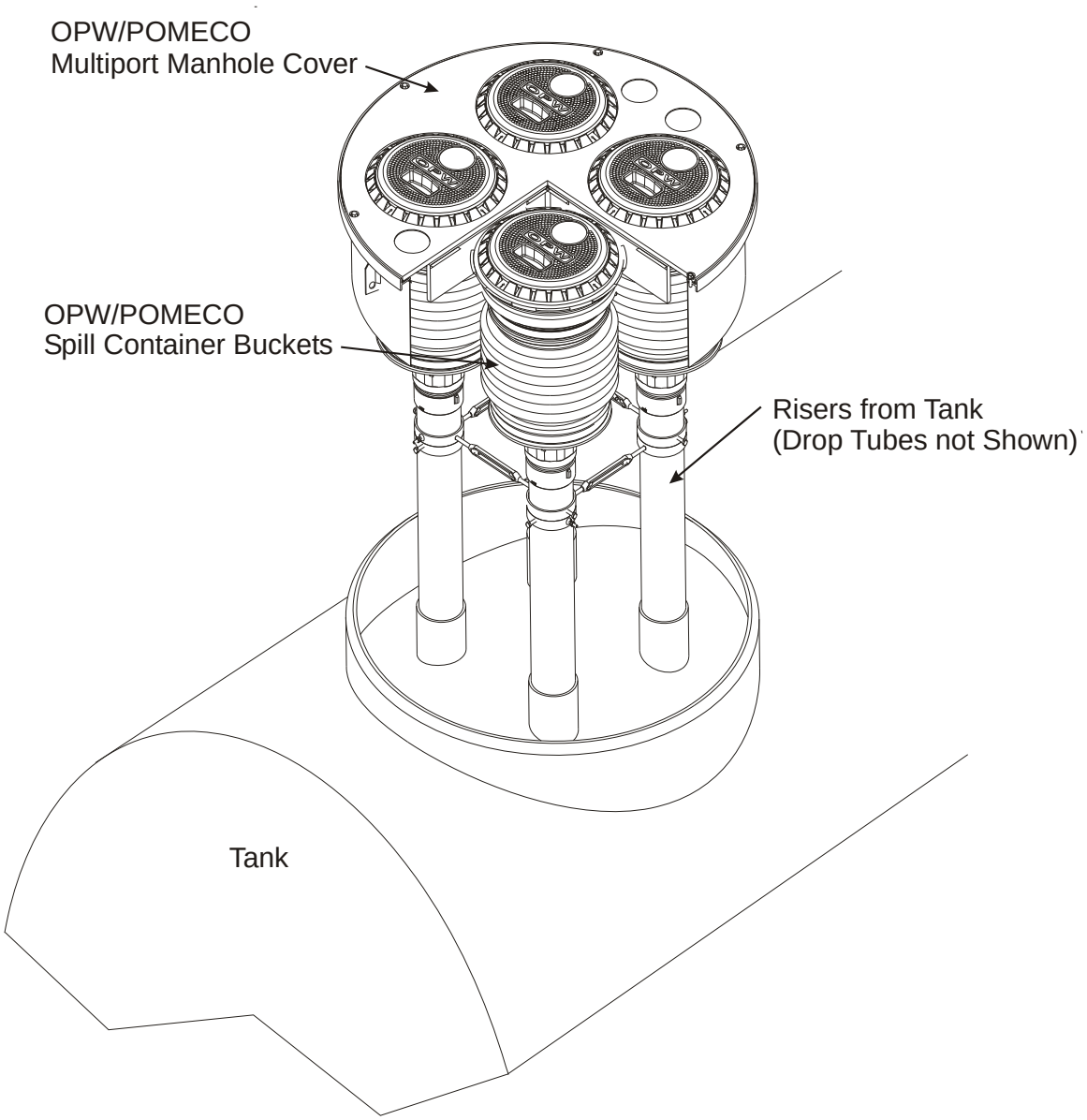

Typical OPW Remote-Fill Access Point Configuration

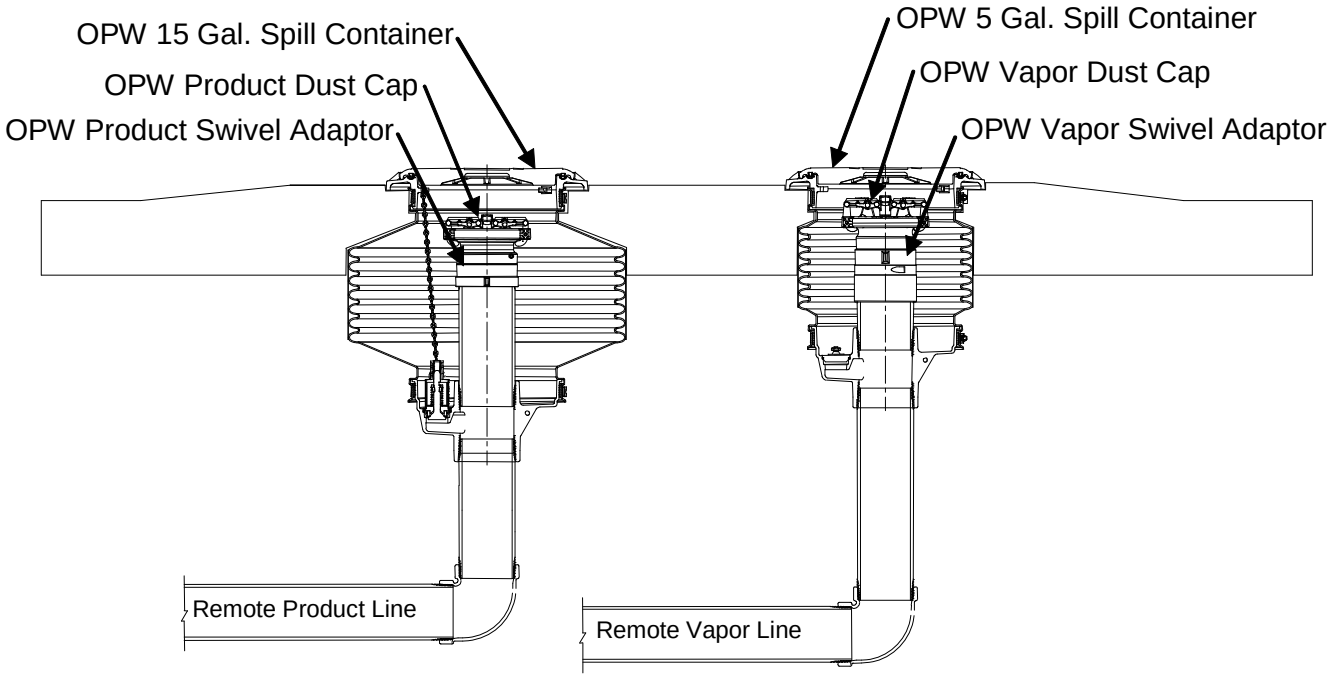

Typical OPW Remote-Fill Tank Top Configuration

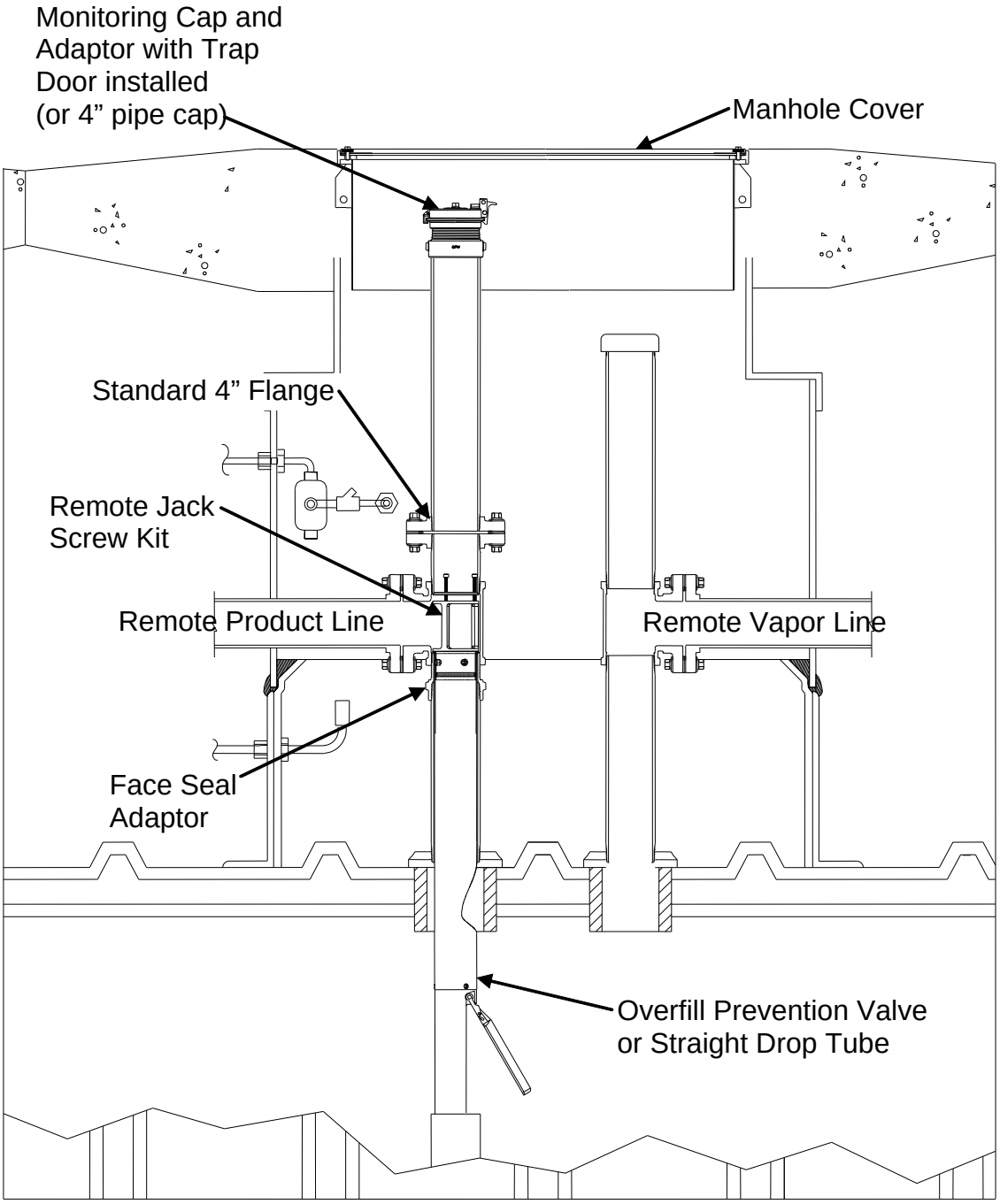

Typical OPW Remote Fuel Additive Configuration

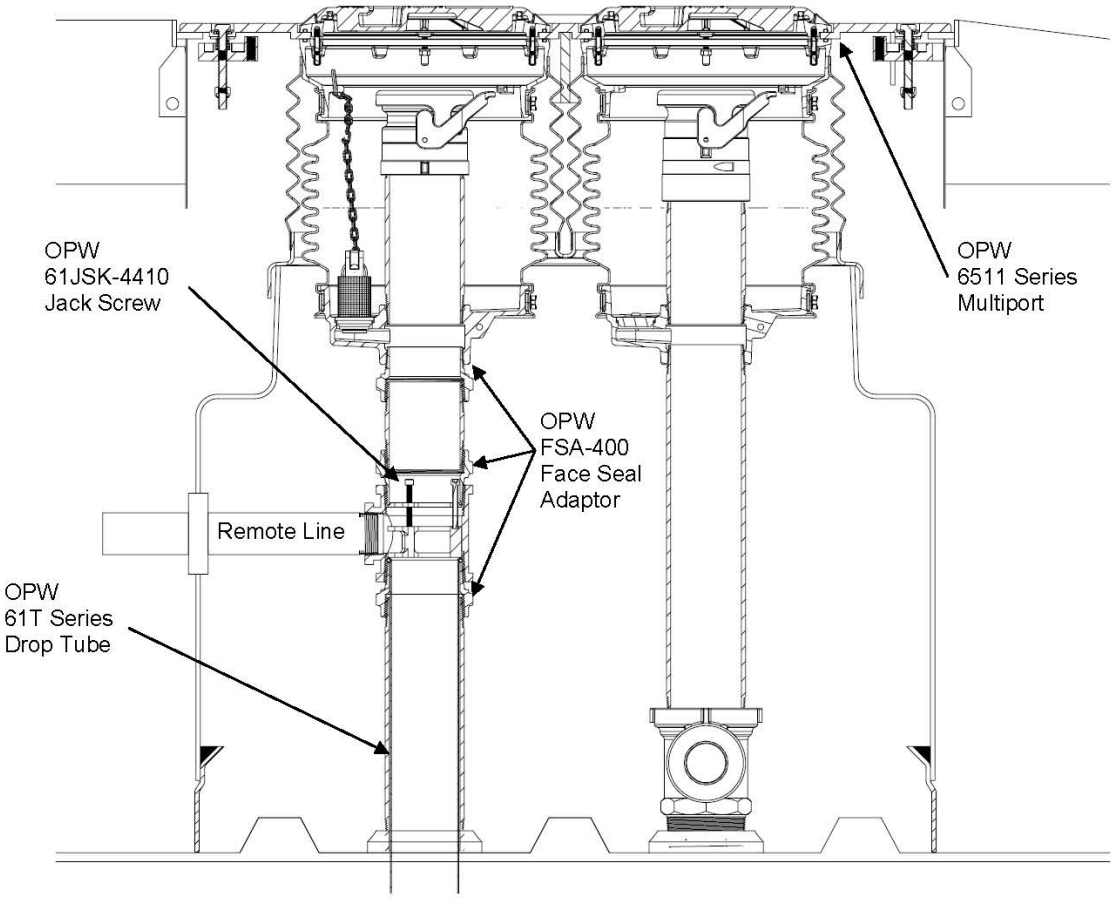

Installation and Maintenance Instructions

OPW 1-2100 Series Thread-On Grade Level Spill Containers

IMPORTANT: Please read these warnings and assembly instructions completely and carefully before starting. Failure to do so may cause product failure, or result in environmental contamination due to liquid leakage into the soil, creating hazardous spill conditions.

IMPORTANT: The OPW 1-2100 Spill Container is preassembled for your convenience and ease of installation. Check to make sure the unit is intact and undamaged and all parts have been supplied. Never substitute parts for those supplied. Doing so may cause product failure.

WARNING-DANGER: Using electrically operated equipment near gasoline or gasoline vapors may result in a fire or explosion, causing personal injury and property damage. Be sure that the working area is free from such hazards, and always use proper precautions.

NOTE: At all times when product is in the storage tank keep the riser pipe capped, so the vapors cannot escape into the environment.

Notice: FlexWorks by OPW, Inc., VAPORSAVER™ and all other OPW products must be used in compliance with all applicable federal, state, provincial and local laws, rules and regulations. Product selection is the sole responsibility of the customer and/or its agents and must be based on physical specifications and limitations, compatibility with the environment and material to be handled. All illustrations and specifications in this literature are based on the latest production information available at the time of publication. Prices, materials and specifications are subject to change at any time, and models may be discontinued at any time, in either case, without notice or obligation.

This section intentionally left blank

This section intentionally left blank.

**** Date of manufacture on this product is located on the mounting ring of the bucket.**

In California it is prohibited to use spill container drain valves on spill containers that are exclusively used for vapor return risers. Install only 1-2100 Series Thread-On spill container models equipped with a drain plug.

1-2100 Series Performance Specifications:

This Spill Container drain valve has been manufactured and tested to the following California specifications: Leak Rate to be less than or equal to 0.17 CFH @ 2.0" W.C.

Torque Specification:

Spill Container 4" NPT, 125 ft-lbs minimum to 250 ft- lbs maximum.

4" Nipple, 4" NPT, 125 ft-lbs minimum to 250 ft-lbs maximum.

Drain Valve clamps: 5/16-18 UN thread, 11.5 ft-lbs minimum to 13.5 ft-lbs maximum.

OPW No. 1-2100 SERIES GRADE LEVEL SPILL CONTAINER INSTALLATION INSTRUCTIONS

Step 1:

Per California SB-989, all metal must be protected from direct contact with the elements. Coat stainless steel band clamps with the following approved coatings. OPW SL-1100, 3M Underseal 08883 or Polyguard Mastic CA-9. Only the threaded hardware needs to be coated in the field.

Step 2: (See Figure 1 & 2)

Set riser pipe. "L" is the distance between the top of the riser pipe and finish grade.

Model Series	"L" Dimension
1-2100, 5 Gal. (Comp. Base)	L=15" (40cm)
1-2100E, 7.5 Gal (Comp. Base)	L=21" (50cm)
1-2115, 15 Gal. (Comp. Base)	L=20" (51cm)
1-2100C, 5 Gal (Cast Iron Base)	L=14 1/2" (37cm)
1-2100EC, 7.5 Gal (Cast Iron Base	L=18 1/2" (47cm)
1-2115C, 15 Gal (Cast Iron Base	L=18 1/2" (47cm)

Note: The "L" dimensions below factors in a 1" slope to grade.

NOTE: If using OPW FSA-400, add 3-1/4" to Dimension "L". If using OPW FSA-400-S, add 1-3/4 to Dimension "L".

NOTE: FSA-400-S will only work with Cast Iron Base.

Step 3:

Deburr and thoroughly clean riser pipe. Apply pipe dope to riser threads. Pipe dope to be a non-

hardening, gasoline resistant pipe thread seal compound.

Step 4:

Install OPW FSA-400 Face Seal Adapter onto riser using the OPW 61SA-TOOL. Torque to 125 ft-lbs min. to 250 ft -lbs max.(4" NPT). Apply pipe dope to FSA-400. Pipe dope should be a non-hardening, gasoline resistant pipe thread seal compound.

Step 5:

Install spill container by rotating the mounting ring until hand tight.

NOTE: Do not attempt to completely tighten the container by using the mounting ring.

Step 6:

Finish tightening the spill container with the OPW 61SA -TOOL. Torque to 125 ft-lbs min. to 250 ft. Lbs. max. (4" NPT)

NOTE: Ground riser pipe to nearest grounding rod.

Step 7: (See Figure 2)

Apply pipe dope to nipple and install. Pipe dope to be a non-hardening, gasoline resistant pipe thread seal compound. Use only factory made nipples. Nipples must be cut square and deburred. Torque to 125 ft-lbs min. to 250 ft-lbs max. (4" NPT). Torque value is based on rotation at the center of pipe. For standard cover models install adaptor and dust cap. For sealable cover (1SC) models, install a standard 4" pipe cap to support adjustment system. (Adaptor and dust cap must be installed in sealable cover (SC) models after concrete has dried.

NOTE: Nipple length is determined by measuring from the bottom of the threaded portion of the base to the bottom of the cover. Then subtract 2" for clearance, height of adaptor and height of cap. Range of nipple lengths that can be used in all of the OPW spill containers: 4" minimum to 14" maximum.

Step 8: (See Figure 3 & 4)

Install adjusting system (sold separately, part number H12267) beneath tabs on mounting ring. See Figure 3 for standard cover models. See Figure 4 for sealable cover models. Add shims as needed and adjust with screw. (Shims must be cut to size for sealable cover models.) The height can be increased up to 1" (2.5cm).

NOTE: The adjustment should not be more than 1" from the initial length of the unit.

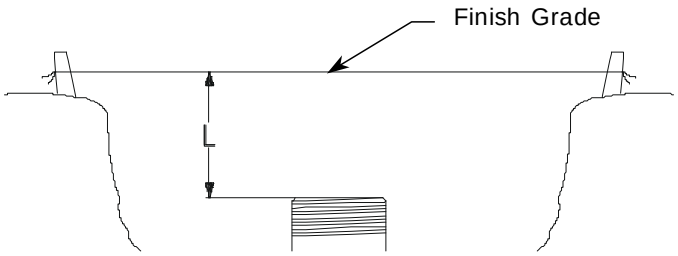

Figure 1

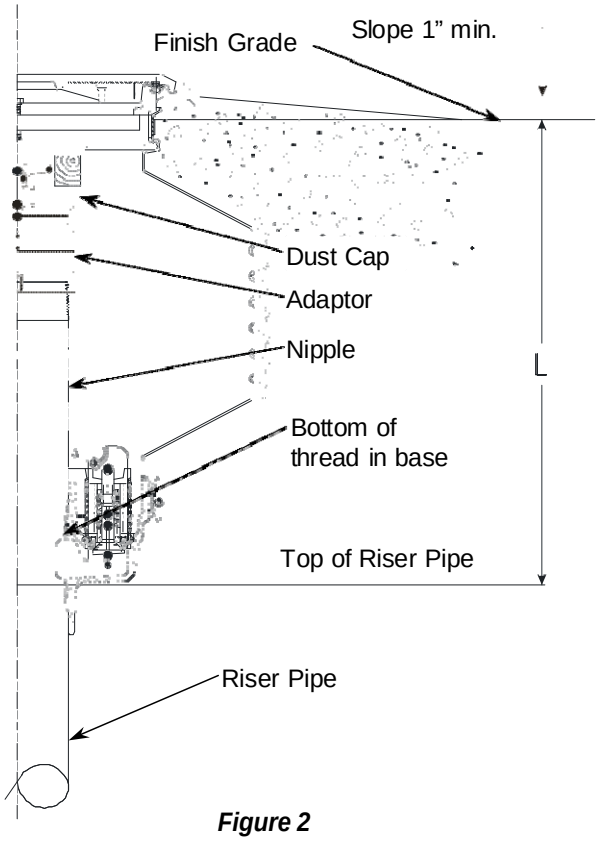

Figure 2

Step 9:

Upon preliminary installation perform the California Test Procedures TP-201.1C or equivalent. Their Test Procedures will check the seals between the drain valve, nipple and rotatable adapter. To test the spill containers base and bellows fill the container with water. A drop in the water level of 1/16" or greater after one hour means that a leak exists. To determine where the leak is, look for a steady stream of bubbles coming from one of the joints or water leaking on the outside of the bucket. **NOTE: Do not drain the water into the UST after the test is complete. Water must be disposed of per local requirements for hazardous waste. If the leak cannot be corrected the spill container should be replaced with another.**

Step 10: (See Figure 2)

Before pouring concrete, place plastic over the cover and mounting ring protecting them from concrete

splash. Double check that the unit is level and at proper grade height. Pour concrete per figure 2. Ramp or dome the concrete away from the mounting ring.
There should be a minimum of 1" slope to finish grade. The concrete surface should start at the bottom edge of the watershed slots and tapered down to grade level.

NOTE: Do not stand on spill container before concrete sets up.

Remove plastic from cover after concrete has dried. Remove adjustment system. Adaptor and tight fill cap can now be installed in sealable cover models. Re-test the spill containers for leaks as described in step 9, after the concrete has set up.

OPERATION AND MAINTENANCE:

Annually: Inspect and clean the interior of the spill container and drain valve screen. Remove accumulated dirt and grit. Test the drain valve using CARB procedure TP-201.1C or TP-201.1D. If the drain valve passes testing no further maintenances

required. If the drain valve fails testing, remove the valve, soak in water and use high-pressure air, if needed, to clean. Reinstall the drain valve to its proper position and test the valve with CARB procedure TP-201.1C or TP -201.1D. If problems persist, replace the drain valve with P/N 1DK-2100-EVR (specified torque 11.5 ft-lbs min to 13.5 ft-lbs max, 5/16-18 UN thread). The sealable cover (1SC) adjustment nut is set at the factory, but due to environmental conditions it may be necessary to adjust it to either improve sealing or ease cover removal.

IMPORTANT: Leave these instructions with the Station Operator.

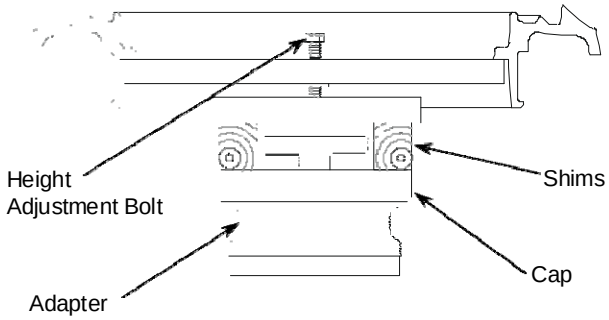

Figure 3 - Standard Cover Model Height Adjustment

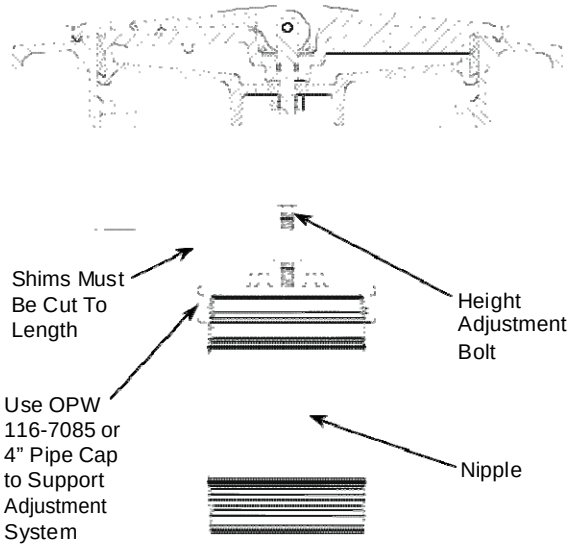

Figure 4 - Sealable Cover Model Height Adjustment

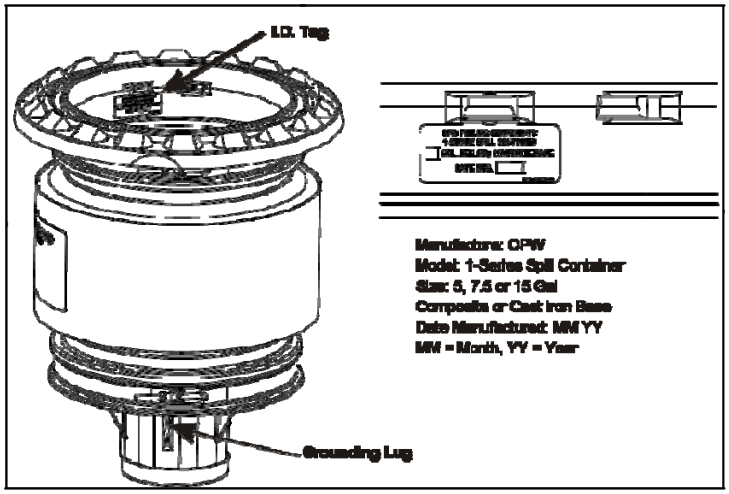

OPW
FUELING CONTAINMENT SYSTEMS
3250 US 70 Business West
Smithfield, NC 27577
Customer Service:1-(800) 422-2525
Technical Service and Questions:
1-(877) OPW-TECH
www.opwglobal.com

PEI MEMBER

OPW 1-3100 Series Thread-On Double Wall Grade Level Spill Containers
Installation and Maintenance Instructions

IMPORTANT: Please read these warnings and assembly instructions completely and carefully before starting. Failure to do so may cause product failure, or result in environ- mental contamination due to liquid leakage into the soil, creating hazardous spill conditions.

IMPORTANT: The OPW 1-3100 Spill Container is preassembled for your convenience and ease of installation. Check to make sure the unit is intact and undamaged and all parts have been supplied. Never substitute parts for those supplied. Doing so may cause product failure.

WARNING-DANGER: Using electrically operated equipment near gasoline or gasoline vapors may result in a fire or explosion, causing personal injury and property damage. Be sure that the working area is free from such hazards, and always use proper precautions.

NOTE: Keep the riser pipe capped at all times when product is in the storage tank, so the vapors cannot escape into the environment.

Notice: FlexWorks by OPW, Inc., VAPORSAVER™ and all other OPW products must be used in compliance with all applicable federal, state, provincial and local laws, rules and regulations. Product selection is the sole re- sponsibility of the customer and/or its agents and must be based on physical specifications and limitations, compatibility with the environment and material to be handled. All illustrations and specifications in this litera- ture are based on the latest production information available at the time of publication. Prices, materials and specifications are subject to change at any time, and models may be discontinued at any time, in either case, without notice or obligation.

This section intentionally left blank.

Date of manufacture on this product is located on the mounting ring of the bucket.

In some states it is prohibited to use spill container drain valves on spill containers that are exclusively used for vapor return risers. Install only 1-3100 Series Thread-On spill container models equipped with a drain plug.

WARNING: If the snowplow ring is removed, for any reason, follow the Operation and Maintenance instruction as noted. Replace o-rings and seals and install new ones. Never reuse damaged o-rings or seals as it may result in an improper seal. Only qualified, competent, well-trained technicians should perform maintenance. Common sense and good judgment should always be exercised. The contractor's understanding of all related site conditions prior to starting the project is essential. If the contractor does not have a clear understanding of the required work and site conditions, the contractor is advised to seek clarification prior to starting any portion of the project.

NOTICE TO DELIVERY DRIVER: All delivery drivers MUST inspect the inside of the container for water or contaminants other than fuel prior to delivery. If water or contaminates are present, then they MUST be removed before proceeding. Dispose of towels and debris safely and per all applicable local, state, and federal codes. After delivery is complete, the driver MUST drain any excess fuel that may have spilled into the container from their delivery hose.

1-3100 Series Performance Specifications: This Spill Container drain valve has been manufactured and tested to the following specifications: Leak Rate to be less than or equal to 0.17 CFH @ 2.0 " W.C.

Torque Specification:

Spill Container 4" NPT, 125 ft-lbs minimum to 250 ft-lbs maximum.

4" Nipple: 4" NPT, 125 ft-lbs minimum to 250 ft-lbs maxi- mum.

NOTE: All 4" NPT threads are to be torqued progressive- ly lower from the tank up.

Drain Valve clamps: 5/16-18 UN thread, 11.5 ft-lbs minimum to 13.5 ft-lbs maximum.

Ring and Nipple Adaptor Bolts: 3/8-16 UN, 20 ft-lbs minimum to 25 ft-lbs maximum.

Tools Recommended:

1-3100-TOOL - Torque Installation Tool

DW-VAC-TEST - Vacuum Test Equipment (or 202310 Test Adaptor)

OPW 1-3100 SERIES GRADE LEVEL SPILL CONTAINER INSTALLATION INSTRUCTIONS:

Step 1: (See Figures 1 and 2)

Determine riser pipe height. "L" is the distance between the top of the riser pipe and finish grade.

NOTE: The spill container height (from riser to grade) is L + 1".

Model Series	"L" Dimension
1-3100, 5 Gal. (Cast Iron Base)	L = 15 5/8" (40 cm)
1-3100, 15 Gal. (Cast Iron Base)	L = 17 3/8" (44 cm)

Step 2:

De-burr and thoroughly clean riser pipe. Apply pipe dope to riser threads. Pipe dope is to be a non- hardening, gasoline resistant pipe thread seal com- pound.

Step 3:

Install gravel guard on riser pipe. Leave band clamp loose.

NOTE: Ground riser pipe to nearest grounding rod.

Step 4:

Install spill container by rotating the mounting ring until hand tight.

This section intentionally left blank.

NOTE: Do NOT attempt to completely tighten the container using the mounting ring. Doing so may cause the unit to fail.

Step 5: (See Figure 2)

Finish tightening the spill container secondary base using the wrenching boss or with the 1-3100-TOOL. Torque to 125 ft-lbs min. to 250 ft-lbs max (4" NPT). 1-3100-TOOL can be used to set final torque (see 1-3100-TOOL instructions). **NOTE**: Per PEI RP100 Section 5.11, support the spill container after installing before backfilling.

Step 6: (See Figures 2 & 3)

Remove Nipple Adaptor from spill container. Apply pipe dope to nipple and install in Nipple Adaptor. Pipe dope is to be a non-hardening, gasoline resistant pipe thread seal compound. Use only factory made nipples. Torque nipple to 125 ft-lbs min. to 250 ft-lbs max. (4" NPT). 1-3100-TOOL can be used to set final torque. Torque value is based on rotation at the center of pipe. For standard covers install rotatable adaptor and dust cap per manufacturers' instructions. For sealable cover (1SC) models, install a standard 4" pipe cap to support adjustment system. (Adaptor and dust cap must be installed in sealable cover (SC) models after concrete has dried. Install drop tube, overfill prevention valve and/or loose jack screw assembly if used (61JSK-44CB) per manufacturers' instructions. Reinstall the Nipple Adaptor in spill container. Torque Nipple Adaptor bolts to 20 ft-lbs minimum to 25 ft-lbs maximum.

NOTE: Nipple length is determined by measuring from the bottom of the threaded portion of the base to the bottom of the cover. Then subtract 2" minimum for clearance, height of adaptor and height of cap. Range of nipple lengths that can be used in all of the OPW spill containers: 4" min to 9" max. (See Figure 6)

Step 7: (See Figures 4 & 8)

If necessary, the height of the spill container can be adjusted by ±1" (2.5cm). If it is necessary to increase height, install adjusting system (sold separately for 5 gallon models, part number H12267) beneath tabs on mounting ring. See Figure 4 for standard cover models and Figure 8 for sealable cover models. Add shims as needed and adjust with screw (shims must be cut to size for sealable cover models).

NOTE: The adjustment should not be more than 1" from the initial length of the unit.

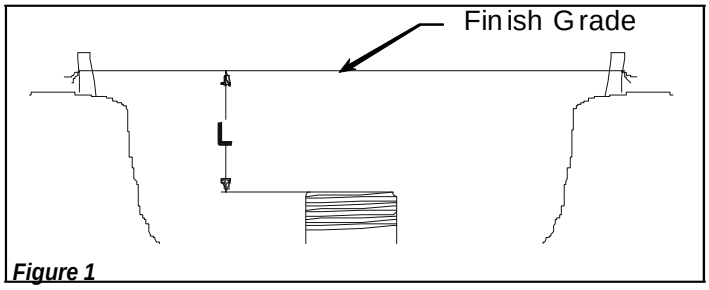

Figure 1

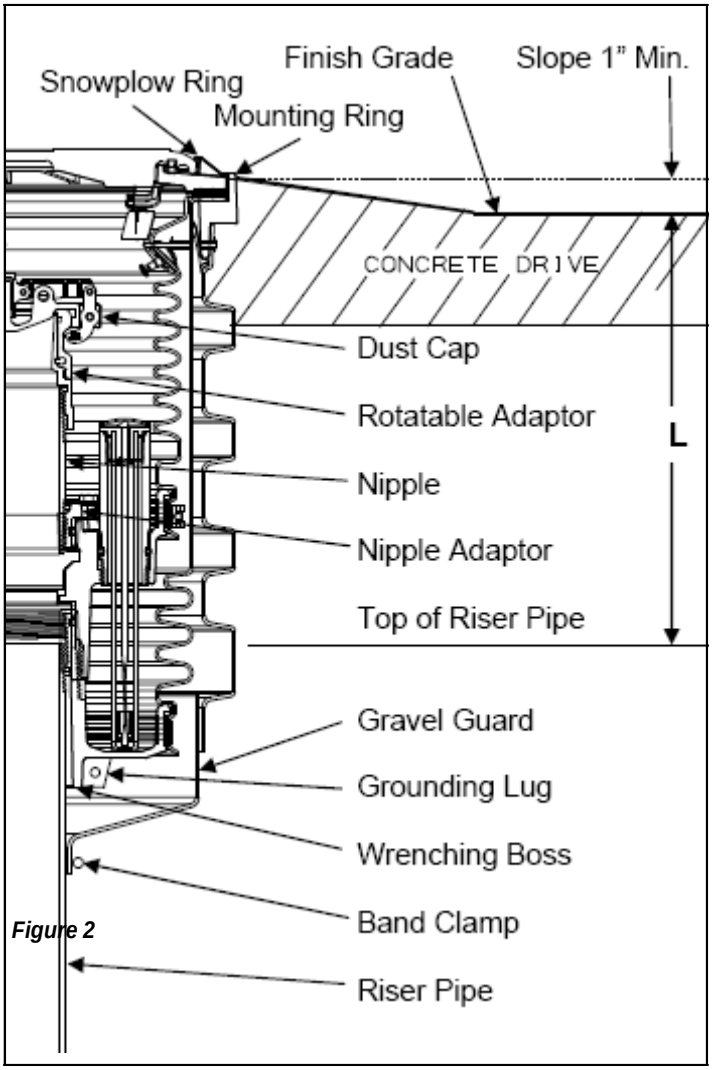

Figure 2

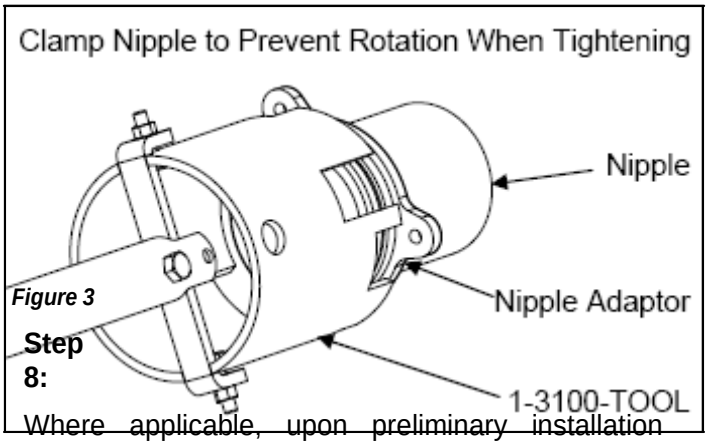

Figure 3

Step 8:

Where applicable, upon preliminary installation perform the CARB Test Procedure TP-201.1C or equivalent. This Test Procedure will check the seals between the drain valve, nipple, bases, and rotatable adapter.

NOTE: Follow all state and local required testing on the primary and secondary buckets.

Step 9: (See Figure 7)

Verify torque on mounting ring bolts. Torque to be 20 ft-lbs minimum to 25 ft-lbs maximum. Using OPW DW-VAC-TEST (or 202310 Test Adaptor), perform a vacuum test on the spill container. An initial vacuum of 15" of water should be attained and the spill container must retain a vacuum of at least 12" of water after 5 minutes. (See DW-VAC-TEST Instructions.)

Step 10: (See Figure 2)

Install gravel guard at final height as shown in Figure 2 and tighten band clamp to 30 in-lbs. Where applicable, per California SB-989, all metal must be protected from direct contact with the elements. Coat stainless steel band clamp with the following approved coatings: OPW SL-1100, 3M Underseal 08883 or Polyguard Mastic CA-9.

Step 11: (See Figures 2 & 5)

Before pouring concrete, place plastic over the cover and Mounting Ring protecting them from concrete splash and tighten the clamp on the gravel guard mounted on the riser pipe. Double check that the unit is level and at proper grade height. Pour concrete per Figure 5. Ramp or dome the concrete away from the mounting ring.

There should be a minimum of 1" slope to finish grade.

NOTE: Do not stand on spill container before concrete sets up.

Remove plastic from cover after concrete has dried. Remove adjustment system. Re-test the spill containers for leaks as described in step 9, after the concrete has set up.

Operation and Maintenance:

After each fuel delivery, the operator must remove any standing fuel from the container. Fuel can be removed by actuating the drain valve or with a gasoline absorbing disposable towel. If access to drop tube or overfill valve is required remove Nipple Adaptor from primary bucket.

Weekly: Perform a visual inspection of the interior of the primary containment bucket for water or other contaminants and check the secondary containment bucket by checking the gauge in the base of the spill container. If water or other contaminants are found they must be disposed of with disposable towels. Dispose of towels safely and per all applicable local, state and federal codes. Check that cover is in good condition and properly identified. Replace cover and seal as necessary. Inspect the bucket walls for cracks, bulges or holes. If any exist, have that spill container barricaded and contact maintenance personnel immediately for repairs.

Semiannually: Follow all state and local required hydrostatic or vacuum testing on the primary and secondary buckets. Inspect and clean the interior of the spill container and drain valve screen. Remove accumulated dirt and grit. Where applicable, test the drain valve using CARB procedure TP-201.1C or TP-201.1D. If the drain valve passes testing no further maintenances required. If the drain valve fails testing, remove the valve, soak in water and use high-pressure air, if needed, to clean. Reinstall the drain valve to its proper position and where applicable, test the valve with CARB procedure TP- 201.1C or TP-201.1D. If problems persist, replace the drain valve with P/N 1DK-2100-EVR (specified torque 11.5 ft-lbs min to 13.5 ft-lbs max, 5/16-18 UN thread). The sealable cover (1SC) adjustment nut is set at the factory, but due to environ- mental conditions it may be necessary to adjust it to either improve sealing or ease cover removal.

IMPORTANT: Leave these instructions with the Station Operator.

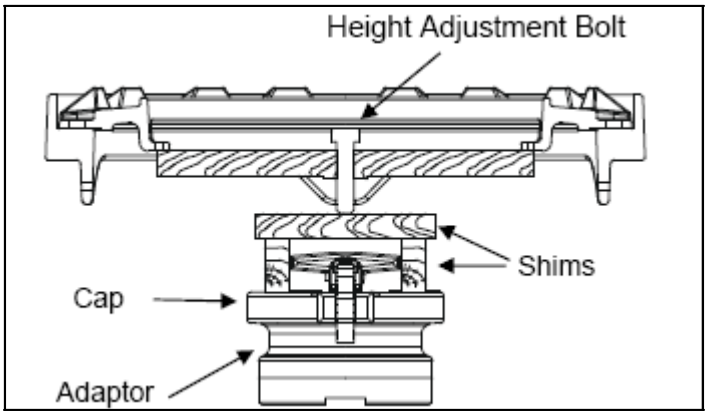

Figure 4

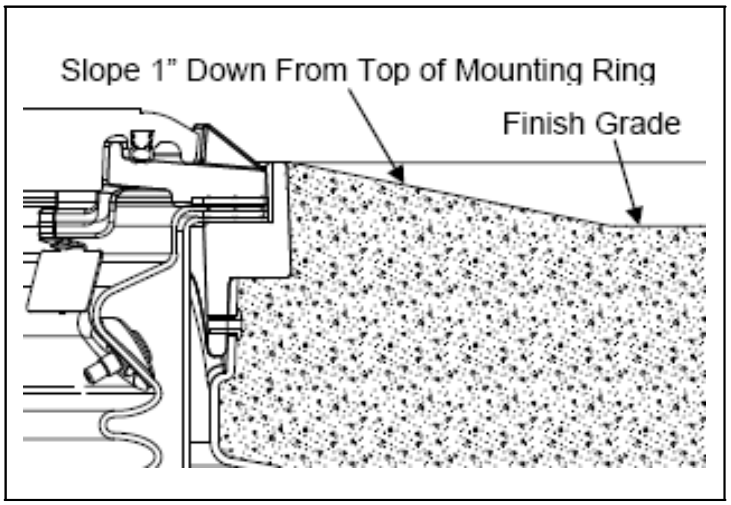

Figure 5

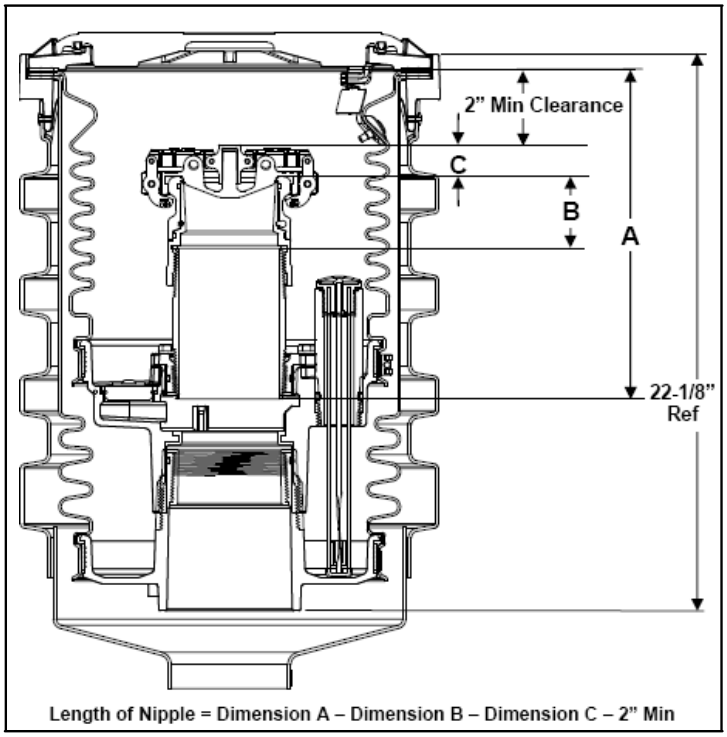

Figure 6

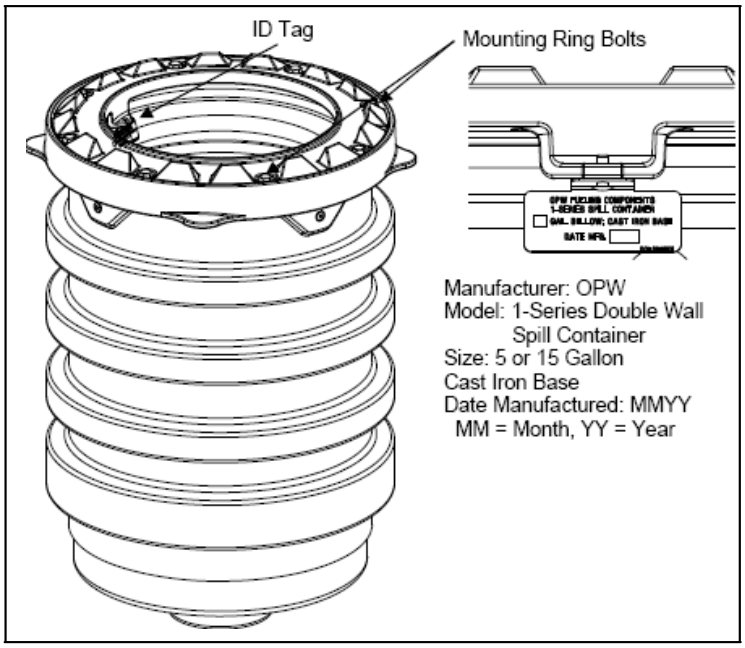

Figure 7

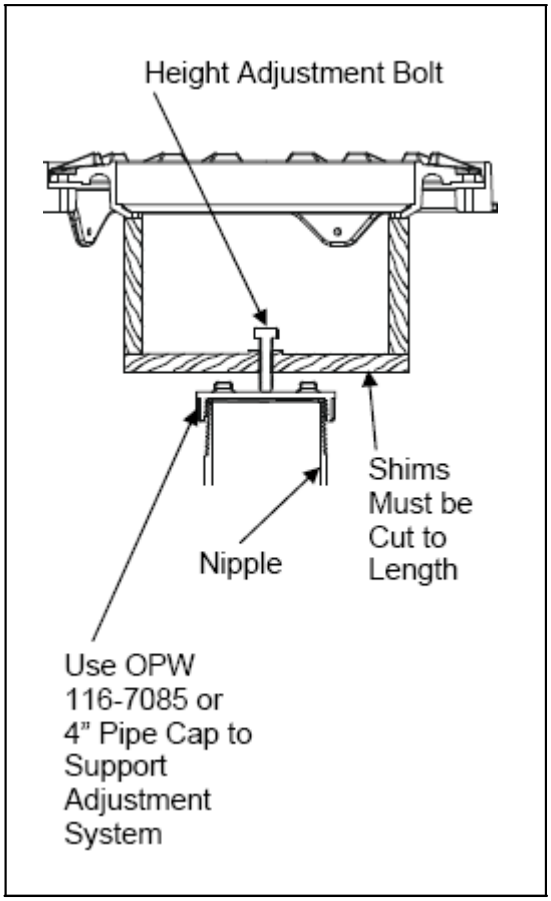

Figure 8

OPW Fueling Containment Systems
3250 US 70 Business West
Smithfield, NC 27577
Customer Service:1-(800) 422-2525
Technical Service and Questions:
1-(877) OPW-TECH
www.opwglobal.com

Notice: OPW-FCS products must be used in compliance with applicable federal, state, provincial and local laws and regulations. Product selection should be based on physical specifications and limitations and compatibility with the environment and material to be handled. OPW-FCS makes no warranty of fitness for a particular use. All illustrations and specifications in this literature are based on the latest production information available at the time of publication. Prices, materials and specifications are subject to change at any time, and models may be discontinued at any time, in either case, without notice or obligation. For complete OPW-FCS warranty information, visit our web site at www.opwglobal.com.

Installation and Maintenance Instructions
OPW 1DK-2100 EVR Replacement Drain Valve

IMPORTANT: Please read these warnings and assembly instructions completely and carefully before starting. Failure to do so may cause product failure, or result in environmental contamination due to liquid leakage into the soil, creating hazardous spill conditions.

IMPORTANT: Check to make sure the unit is intact and undamaged and all parts have been supplied. Never substitute parts for those supplied. Doing so may cause product failure and void warranty.

WARNING-DANGER: Using electrically operated equipment near gasoline or gasoline vapors may result in a fire or explosion, causing personal injury and property damage. Be sure that the working area is free from such hazards, and always use proper precautions.

NOTE: At all times when product is in the storage tank keep the riser pipe capped, so the vapors cannot escape into the environment.

Notice: FlexWorks by OPW, Inc., VAPORSAVER™ and all other OPW products must be used in compliance with all applicable federal, state, provincial and local laws, rules and regulations. Product selection is the sole responsibility of the customer and/or its agents and must be based on physical specifications and limitations, compatibility with the environment and material to be handled. All illustrations and specifications in this literature are based on the latest production information available at the time of publication. Prices, materials and specifications are subject to change at any time, and models may be discontinued at any time, in either case, without notice or obligation.

This section intentionally left blank.

The OPW 1DK is an optional drain valve replacement kit for the OPW 1 Spill Container Series. It is designed to return incidental spillage of liquid back to the underground storage tank.

This section intentionally left blank.

HOW TO INSTALL

1. Remove and discard existing drain valve and O-ring.
2. Clean any dirt or debris from the sealing surface where the new drain valve will be installed.
3. Apply any common grease or light oil to the new supplied O-ring. Assemble the O-ring into the spill container base.
4. Insert the 1DK into the spill container O-ring. Be sure that the drain valve seats flush with the floor of the spill container base.
5. The pull lever of the 1DK MUST be positioned halfway between the riser pipe nipple and the spill container bellows. Rotate the drain valve until that position is attained.
6. Secure the 1DK by installing the provided retaining clips and nuts. Tighten the nuts to a torque of 11.5 ft-lbs min. to 13.5 ft-lbs max.
7. The drain valve is now installed and ready for testing.

HOW TO TEST (UST):

Upon preliminary installation perform the California Test Procedures TP-201.1C or equivalent. Their Test Procedures will check the seals between the drain valve, nipple and rotatable adapter. To test the spill containers base and bellows fill the container with water. A drop in the water level of 1/16” or more after one hour means that a leak exists. To determine where the leak is, look for a steady stream of bubbles coming from one of the joints. **NOTE**: Do not drain the water into the UST after the test is complete. Water must be disposed of per local requirements for hazardous waste.

If a leak is observed in the Test Procedure, check to see that the drain valve poppet is sealing properly. To do this, lift up the drain valve pull chain several times to actuate the poppet. This will ensure that the drain valve poppet is seating properly. If this doesn’t correct the leak remove the 1DK valve and inspect the O-ring for nicks or tears, replace if needed, also clean the sealing surfaces of the spill container base that the 1DK valve and O-ring are installed into. Reinstall 1DK valve and repeat test.

If spill container passes the Test Procedure but does not hold water then there is a leak in the bucket and will need to be replaced.

HOW TO TEST (AST):

Upon preliminary installation perform the California Test Procedures TP-206.3 or equivalent. Test the drain valve by applying a soap solution to the drain valve

while the aboveground storage tank is under a positive gauge pressure of at least 2.00 inches W.C (per TP206.3) and inspect for the presence of bubbles. A bag test may be used by sealing a clear plastic bag around the drain valve. If no bubbles appear at the drain valve under positive pressure or the bag test shows no signs of the bag infalting, no further maintenance is required. If bubbles appeared around the drain valve or the bag inflated, replace the drain valve and re-test.

Alternative Construction

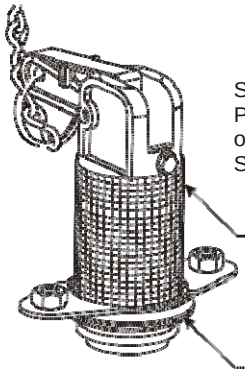

1DK-2100 EVR Replacement Drain Valve Performance Specifications:

This Spill Container drain valve has been manufactured and tested to the following California specifications: Leak Rate to be less than or equal to 0.17 CFH @ 2.0" W.C.

Operation and Maintenance

To open, pull drain valve chain up and hold open until liquid is drained. To close, release chain.

Annually: Inspect and clean the interior of the spill container and drain valve screen. Remove accumulated dirt and grit. Test the drain valve using CARB procedure TP-201.1C or TP-201.1D. If the drain valve passes testing no further maintenances required. If the drain valve fails testing, remove the valve, soak in water and use high-pressure air, if needed, to clean. Reinstall the drain valve to its proper position and test the valve with CARB procedure TP-201.1C or TP-201.1D.

IMPORTANT: Leave these Instructions with the Sta- tion Operator.

This section intentionally left blank.

Installation and Maintenance Instructions
OPW 634TT-EVR and 1711T-EVR Dust Caps

IMPORTANT: Please read these warnings and assembly instructions completely and carefully before starting. Failure to do so may cause product failure, or result in environmental contamination due to liquid leakage into the soil, creating hazardous spill conditions.

IMPORTANT: Check to make sure the product is intact and undamaged and all parts have been supplied. Never substitute parts for those supplied. Doing so may cause product failure.

WARNING-DANGER: Using electrically operated equipment near gasoline or gasoline vapors may result in a fire or explosion, causing personal injury and property damage. Be sure that the working area is free from such hazards, and always use proper precautions.

Notice: OPW products must be used in compliance with applicable federal, state, and local laws and regulations. Product selection should be based on physical specifications and limitations and compatibility with the environment and material to be handled. All illustrations and specifications in this literature are based on the latest production information available at the time of publication. Prices, materials, and specification are subject to change at any time, and models may be discontinued at any time, in either case, with- out notice or obligation.

Notice: FlexWorks by OPW, Inc., VAPORSAVER™ and all other OPW products must be used in compliance with all applicable federal, state, provincial and local laws, rules and regulations. Product selection is the sole responsibility of the customer and/or its agents and must be based on physical specifications and limitations, compatibility with the environment and material to be handled. All illustrations and specifications in this literature are based on the latest production information available at the time of publication. Prices, materials and specifications are subject to change at any time, and models may be discontinued at any time, in either case, without notice or obligation.

This section intentionally left blank.

This section intentionally left blank.

Date of manufacture on this product is stamped on the metal cam.

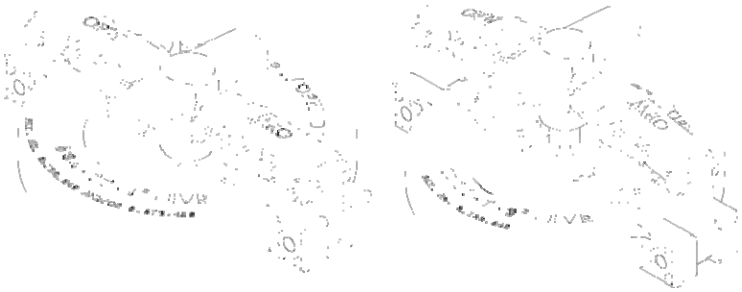

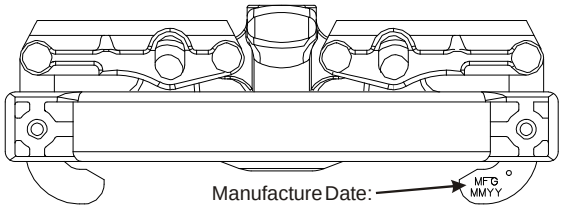

PRODUCT IDENTIFICATION:

Manufacture: "DOVER CORP / OPW DIV."
Model: "634-TT-4-EVR" or "1711-T-3-EVR"
Date Manufactured: "MFG MM/YY"
MM=Month, YY=Year

OPERATION AND MAINTENANCE:

1. Annually inspect seal for nicks, tears or deformations. If required, replace with OPW P/N H15005M for 634TT and H10886M for 1711T.

OPW
FUELING CONTAINMENT SYSTEMS

PEI MEMBER

3250 US 70 Business West
Smithfield, NC 27577
Customer Service:1-(800) 422-2525
Technical Service and Questions:
1-(877) OPW-TECH
www.opwglobal.com

Installation and Maintenance Instructions
OPW 634LPC and 1711LPC Dust Caps

IMPORTANT: Please read these warnings and assembly instructions completely and carefully before starting. Failure to do so may cause product failure, or result in environmental contamination due to liquid leakage into the soil, creating hazardous spill conditions.

IMPORTANT: Check to make sure the product is intact and undamaged and all parts have been supplied. Never substitute parts for those supplied. Doing so may cause product failure.

WARNING-DANGER: Using electrically operated equipment near gasoline or gasoline vapors may result in a fire or explosion, causing personal injury and property damage. Be sure that the working area is free from such hazards, and always use proper precautions.

Notice: OPW products must be used in compliance with applicable federal, state, and local laws and regulations. Product selection should be based on physical specifications and limitations and compatibility with the environment and material to be handled. All illustrations and specifications in this literature are based on the latest production information available at the time of publication. Prices, materials, and specification are subject to change at any time, and models may be discontinued at any time, in either case, with- out notice or obligation.

Notice: Flex- Works by OPW, Inc., VAPORSAVER™ and all other OPW products must be used in compliance with all applicable federal, state, provincial and local laws, rules and regulations. Product selection is the sole responsibility of the customer and/or its agents and must be based on physical specifications and limitations, compatibility with the environment and material to be handled. All illustrations and specifications in this literature are based on the latest production information available at the time of publication. Prices, materials and specifications are subject to change at any time, and models may be discontinued at any time, in either case, without notice or obligation.

This section intentionally left blank.

Date of manufacture on this product is located on the underside of the cap.

This section intentionally left blank.

PRODUCT IDENTIFICATION:

Manufacture: "OPW"
Model: "6344LPC" or "1711LPC"
Date Manufactured (located on underside): "MFG MMYY"; MM=Month, YY=Year

OPERATION AND MAINTENANCE:

1. Annually inspect seal for nicks, tears or deformations. If required, replace with OPW P/N H15005M.

OPW
FUELING CONTAINMENT SYSTEMS

PEI MEMBER

3250 US 70 Business West
Smithfield, NC 27577
Customer Service:1-(800) 422-2525
Technical Service and Questions:
1-(877) OPW-TECH
www.opwglobal.com

CompX Security Products (CSP) CSP1-634LPC, CSP2-634LPC, CSP3-1711LPC and CSP4-1711LPC Tank Commander Dust Caps

TANK Commander – Warranty

Seller warrants to the initial and subsequent purchasers, for a period of one year from date of installation, that the Products sold hereunder will, at the time of delivery: (a) comply with the ARB CP-201 standards and specifications for the duration of the warranty period for such Products in effect at the time of shipment or such other specifications as are expressly agreed upon by Seller and Buyer in writing; (b) be adequately contained, packaged, and labeled; and (c) conform to any promises and affirmations of fact made on the container and label. In the event that any such Products fail to conform to the foregoing warranty, Seller will, at its option, repair or replace such nonconforming Products, or credit Buyer for an amount not to exceed the original sales price of such Products. Shipping costs incurred in returning such nonconforming Products to Seller shall be borne by Seller, but Seller shall in no event be liable for any inspection, handling, or packaging costs incurred by Buyer in connection with such Products. Buyer's negligence, misuse, improper installation, or unauthorized repair or alteration, shall void this warranty.

The TANK Commander Warranty tag is located on the inside cover of the product.

Tank Commander features:

Tank Commander fits all certified Phase 1 Vapor Recovery Systems: Phil-Tite, OPW, EBW, CNI and EMCO Wheaton

- Stainless steel construction
- Vapor recovery seal remains intact
- Low profile fill cap included
- Fits common bronze adapters
- 24/7 protection for diesel and gas

TuBAR Tank Commander

- TuBAR® lock for maximum key control
  - No key blanks available except from factory
  - Key series registered to your store(s)
- Keyed alike available – use the same key for both Tank Commander and dispenser

Padlock Tank Commander

- Available with heavy duty four number changeable combination padlock
- Or use existing padlock

TuBAR Tank Commander

(P/N: TC-1, TC-1-V)

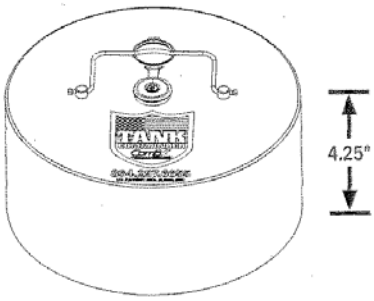

Padlock Tank Commander

(P/N: TC-PL, TC-PL-V)

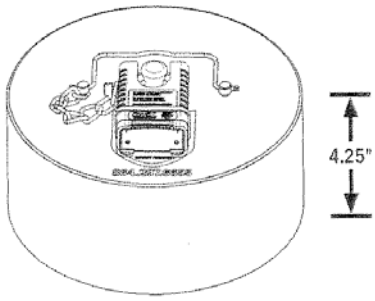

CompX SECURITY PRODUCTS

TANK COMMANDER

ISO 9001 certified.

Copyright 2012 © CompX Security Products / 864.297.6655 / compx.com / PO Box 200, Mauldin, SC 29662
Any companies and/or products referred to herein are marks or registered trademarks of their respective companies, owners and/or mark holders.

TANK Commander – Instructions

Product Instructions

Remove existing dust cap OPW 634LPC, OPW 634TT-EVR, Morrison Brothers 305C-0100ACEVR, EBW 777-201-01, EBW 777-201-02, CNI Mfg. 64, OR EMCO Wheaton Retail A0097-005 and replace with appropriate TANK Commander dust cap; CSP1-634LPC, CSP2- 634LPC, CSP3-1711LPC or CSP4-1711LPC. Make sure the handle lever is fully locked and the dust cap seal is engaged.

Annually inspect dust cap seal for nicks, tears or deformations and replace if necessary. Installation of TANK Commander should not violate any (height) limitations exhibited in California Air Resources Board Executive Orders VR101-VR105. If the original Vapor Recovery System installation will not allow correct installation of TANK Commander then modification to the vapor recovery system is required (i.e. fill pipe height reduction) to maintain installation requirements.

TuBAR TANK Commander (P/N: TC-1, TC-1-V)

Insert key into the keyway of the lock on top of the stainless steel TANK Commander and rotate clockwise to retract locking bolt. Install stainless steel TANK Commander over the CSP1-634LPC product dust cap or CSP3-1711LPC vapor dust cap ensuring the lock body mounted in the sleeve fully engages the brass boss on top of the dust cap. Return the key to the 12 o'clock position and remove. The TANK Commander is now secured to the dust cap and should rotate freely.

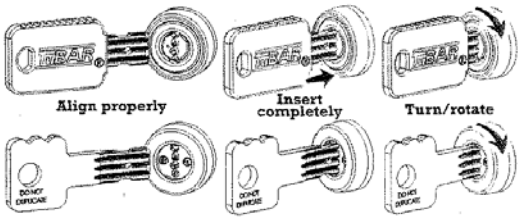

Padlock TANK Commander (P/N: TC-PL, TC-PL-V)

Install stainless steel TANK Commander over dust cap spindle on CSP2-634LPC or CSP4-1711LPC; install padlock shackle through the spindle hole. Secure TANK Commander by locking the padlock; product should rotate freely.

The factory combination is 0-0-0-0. Be sure to record new combination. Warranty does not cover lost, stolen or incorrectly set combinations.

To Open: Spin the dials so the proper numbers align on top with the black hash marks. Pull the shackle up to unlock.

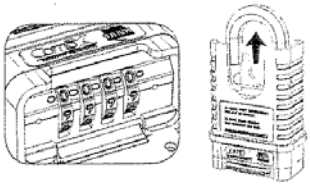

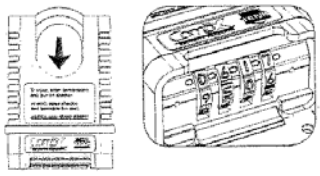

To Close: Push the shackle down to close. Scramble dials to lock the shackle. The dials will only spin when the shackle is in the locked position.

To Change the Combination: Open the lock using the proper combination and pull the shackle up to unlock. Turn the shackle 90° then press down completely. Now rotate another 90° to the left.

Set the dials to the new combination. Pull shackle up and check that the new combination remains set properly on the intended numbers.

See previous instructions (on left) to close and lock.

Standard Product Warranty on back.

ISO 9001 certified.

Copyright 2012 © CompX Security Products / 864.297.6655 / compx.com / PO Box 200, Mauldin, SC 29662
Any companies, brands or products referred to herein are trademarks or registered trademarks of their respective companies/owner. • Specs subject to change.

Installation and Maintenance Instructions
OPW 61SALP EVR (Low Profile) Rotatable Product Adaptors

Please read these warnings and assembly instructions completely and carefully before starting. Failure to do so may cause product failure, or result in environmental contamination due to liquid leakage into the soil, creating hazardous spill conditions.

IMPORTANT: Check to make sure the unit is intact and undamaged and all parts have been supplied. Never substitute parts for those supplied. Doing so may cause product failure.

WARNING-DANGER: Using electrically operated equipment near gasoline or gasoline vapors may result in a fire or explosion, causing personal injury and property damage. Be sure that the working area is free from such hazards, and always use proper precautions.

NOTE: At all times when product is in the storage tank keep the riser pipe capped, so the vapors cannot escape into the environment.

Notice: OPW products must be used in compliance with applicable federal, state, and local laws and regulations. Product selection should be based on physical specifications and limitations and compatibility with the environment and material to be handled. All illustrations and specifications in this literature are based on the latest production information available at the time of publication. Prices, materials, and specification are subject to change at any time, and models may be discontinued at any time, in either case, without notice or obligation.

Notice: Flex- Works by OPW, Inc., VAPORSAVER™ and all other OPW products must be used in compliance with all applicable federal, state, provincial and local laws, rules and regulations. Product selection is the sole responsibility of the customer and/or its agents and must be based on physical specifications and limitations, compatibility with the environment and material to be handled. All illustrations and specifications in this literature are based on the latest production information available at the time of publication. Prices, materials and specifications are subject to change at any time, and models may be discontinued at any time, in either case, without notice or obligation.

This section intentionally left blank.

This section intentionally left blank.

Date of manufacture on this product is located on the adaptor just below the groove.

61 SALP Performance Specifications:

This Rotatable Adaptor has been manufactured and tested to the following California Specifications: Rotatable 360°, Static Torque maximum 108 inch-lbs.

Preventative Maintenance

Annually Inspect the adaptor for large dents, cracks or deformation. Replace if necessary. The rotation mechanism is not field serviceable.

Replacement Parts

Part Number	Description
H09039M	Nipple Sealing Gasket

Torque Specification

Adaptor, 4" NPSM, 90 ft-lbs minimum to 110 ft-lbs maximum.

IMPORTANT: Leave these Installation Instructions with the Station Operator.

61 SALP EVR Rotatable Product Adaptor Installation Instructions

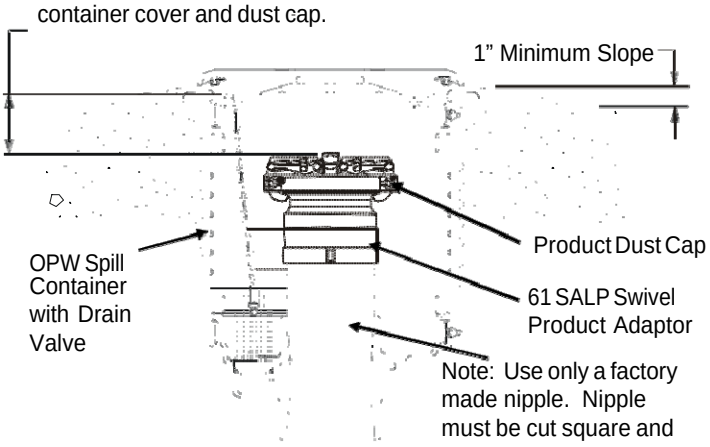

Note: This is a typical installation for the Product OPW 61SALP. Installation may vary for your application.

Step 1

The riser nipple in the spill container must be cut square and deburred. See drawing note for the correct dis-

tance between the top of the nipple and finished grade. (Optional: Use an OPW FSA-400 Face Seal Adapter with nipple. Add 3-1/4" to distance from top of nipple to finish grade).

Step 2 (Optional)

Apply pipe dope to the nipple. Pipe dope to be non-hardening, gasoline resistant pipe thread seal compound.

Step 3

Tighten the Rotatable Adaptor onto the nipple with a torque of 90 ft-lbs min. to 110 ft-lbs max this will be enough torque to seat and seal the gasket. Use an OPW 61SA-TOOL to install rotatable adaptor.

Static Torque Test

1) Using OPW 200459 Swivel Adaptor Torque Tool and OPW 634TT Product Cap, annually verify the static torque of the swivel adaptor by performing California ARB test procedure TP-201.1B.

Manufacture "OPW"
Date Manufactured: "MFG MMYY"
MM= Month, YY=Year

Product ID: "61SALP"

This section intentionally left blank.

Installation and Maintenance Instructions OPW 61VSA EVR Poppetted Rotatable Vapor Recovery Adaptors

Please read these warnings and assembly instructions completely and carefully before starting. Failure to do so may cause product failure, or result in environmental contamination due to liquid leakage into the soil, creating hazardous spill conditions.

IMPORTANT: Check to make sure the unit is intact and undamaged and all parts have been supplied. Never substitute parts for those supplied. Doing so may cause product failure.

WARNING-DANGER: Using electrically operated equipment near gasoline or gasoline vapors may result in a fire or explosion, causing personal injury and property damage. Be sure that the working area is free from such hazards, and always use proper precautions.

NOTE: At all times when product is in the storage tank keep the riser pipe capped, so the vapors cannot escape into the environment.

Notice: OPW products must be used in compliance with applicable federal, state, and local laws and regulations. Product selection should be based on physical specifications and limitations and compatibility with the environment and material to be handled. All illustrations and specifications in this literature are based on the latest production information available at the time of publication. Prices, materials, and specification are subject to change at any time, and models may be discontinued at any time, in either case, without notice or obligation.

Notice: Flex- Works by OPW, Inc., VAPORSAVER™ and all other OPW products must be used in compliance with all applicable federal, state, provincial and local laws, rules and regulations. Product selection is the sole responsibility of the customer and/or its agents and must be based on physical specifications and limitations, compatibility with the environment and material to be handled. All illustrations and specifications in this literature are based on the latest production information available at the time of publication. Prices, materials and specifications are subject to change at any time, and models may be discontinued at any time, in either case, without notice or obligation.

This section intentionally left blank.

This section intentionally left blank.

Date of manufacture on this product is located on the adaptor just below the groove.

61VSA Performance Specifications:

This Rotatable Adaptor has been manufactured and tested to the following California Specifications: Rotatable 360°, Static Torque maximum 108 inch-lbs.

Preventative Maintenance

Annually Inspect the adaptor for large dents, cracks or deformation. Replace if necessary. The rotation mechanism is not field serviceable.

Check the vapor poppet for damage and ensure that the poppet seats evenly with the adaptor. Clean out any foreign objects from the vapor poppet's seal and seal surface if necessary. Test the poppet seal by applying a soap solution to the poppet while the under- ground or aboveground storage tank is under a positive gauge pressure of at least 2.00 inches W.C and inspect for the presence of bubbles. If the facility continuously operates under vacuum, a bag test may be used by sealing a clear plastic bag to the adaptor's sides.

If no bubbles appear at the poppet under positive pressure or the bag test shows no signs of the bag collapsing, no further maintenance is required. If bubbles appeared around the poppet seal or the bag collapsed, replace the poppet components and retest.

Replacement Parts

Part Number	Description
H09039M	Nipple Sealing Gasket
61VSA-KIT	Vapor Poppet Kit

Torque Specification

Adaptor, 4" NPSM, 90 ft-lbs minimum to 110 ft-lbs maximum.

Patent #5,664,951

IMPORTANT: Leave these Installation Instructions with the Station Operator.

61VSA EVR Series Poppetted Rotatable Vapor Adaptor Installation Instructions

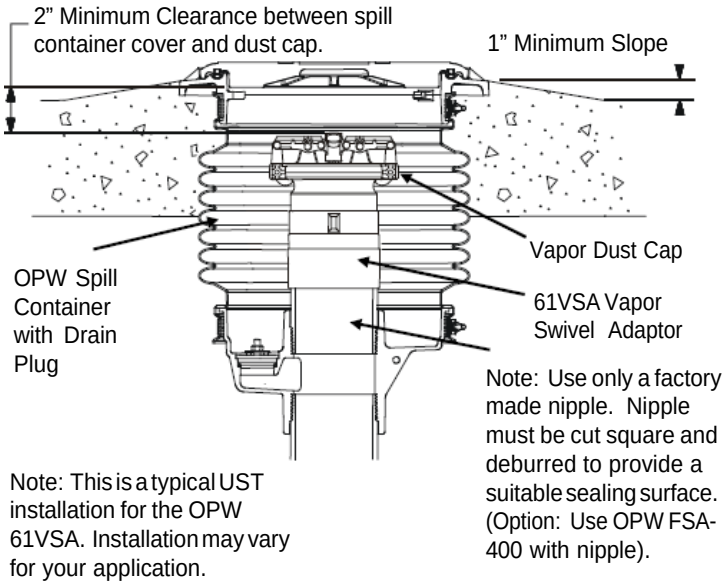

Step 1

The riser nipple in the spill container must be cut square and deburred. See drawing note for the correct distance between the top of the nipple and finished grade. (Optional: Use an OPW FSA-400 Face Seal Adapter with nipple. Add 3-1/4" to distance from top of nipple to finish grade).

Step 2 (Optional)

Apply pipe dope to the nipple. Pipe dope is to be non-hardening, gasoline resistant pipe thread seal compound.

Step 3

Tighten the Rotatable Adaptor onto the nipple with a torque of 90 ft-lbs min. to 110 ft-lbs max this will be enough torque to seat and seal the gasket. Use an OPW 61SA-TOOL to install rotatable adaptor.

Static Torque Test

1) Using OPW 200459 Swivel Adaptor Torque Tool and OPW 1711T Vapor Cap, annually verify the static torque of the swivel adaptor by performing California ARB test procedure TP-201.1B. **NOTE**: On aboveground storage tanks, the static torque test must be conducted at least once every three years.

Manufacture: "OPW"
Date Manufactured: "MFG MMYY"
MM= Month, YY=Year

Product ID: "61VSA"

OPW
FUELING CONTAINMENT SYSTEMS

PEI MEMBER

3250 US 70 Business West
Smithfield, NC 27577
Customer Service:1-(800) 422-2525
Technical Service and Questions:
1-(877) OPW-TECH
www.opwglobal.com

Installation and Maintenance Instructions

OPW 61JSK-4410, 61JSK-44CB and 71JSK-44MA Jack Screw Kit

IMPORTANT: Please read these warnings and assembly instructions completely and carefully before starting. Failure to do so may cause product failure, or result in environmental contamination due to liquid leakage into the soil, creating hazardous spill conditions.

IMPORTANT: Check to make sure the product is intact and undamaged and all parts have been supplied. Never substitute parts for those supplied. Doing so may cause product failure.

WARNING-DANGER: Using electrically operated equipment near gasoline or gasoline vapors may result in a fire or explosion, causing personal injury and property damage. Be sure that the working area is free from such hazards, and always use proper precautions.

NOTE: At all times when product is in the storage tank keep the riser pipe capped, so the vapors cannot escape into the environment.

Notice: OPW products must be used in compliance with applicable federal, state, and local laws and regulations. Product selection should be based on physical specifications and limitations and compatibility with the environment and material to be handled. All illustrations and specifications in this literature are based on the latest production information available at the time of publication. Prices, materials, and specification are subject to change at any time, and models may be discontinued at any time, in either case, without notice or obligation.

Notice: Flex- Works by OPW, Inc., VAPORSAVER™ and all other OPW products must be used in compliance with all applicable federal, state, provincial and local laws, rules and regulations. Product selection is the sole responsibility of the customer and/or its agents and must be based on physical specifications and limitations, compatibility with the environment and material to be handled. All illustrations and specifications in this literature are based on the latest production information available at the time of publication. Prices, materials and specifications are subject to change at any time, and models may be discontinued at any time, in either case, without notice or obligation.

This section intentionally left blank.

This section intentionally left blank.

Date of manufacture on this product is located on the upper jack screw plate.

61JSK and 71JSK Performance Specifications:

This OPW Jack Screw Kit is designed to lock an OPW 61SO or 71SO Series Overfill Valve or 61T Drop Tube into an OPW 1-2100 or 1-3100 (or Multi-Port 500) Series Spill Container Base below the outlet of the drain valve.

Torque Specification

5/16-18 Screw, 3.5 ft-lbs (42 in-lbs) minimum to 5.0 ft-lbs (60 in-lbs) maximum.

4” Nipple, 125 ft-lbs minimum to 250 ft-lbs maximum.

4” NPT Thread, 125 ft-lbs minimum to 250 ft-lbs maximum.

IMPORTANT: The figures in this installation and maintenance instruction may contain vapor recovery equipment (including model numbers) that is not certified by the California Air Resources Board (CARB) for a specific Phase I Vapor Recovery System. Please refer to Exhibit 1 of the appropriate CARB Phase 1 Executive Order for a list of certified Phase 1 Vapor Recovery System Equipment.

NOTE: The 71JSK-44MA contains the parts for both composite and cast iron base applications. For composite base applications use the tall lower cage and proceed to the 61JSK-4410 composite base installation instructions. For cast iron base applications use the thin lower plate and proceed to the 61JSK-44CB cast iron base installation instructions.

OPW 61JSK-4410 Jack Screw Kit for Composite Base Spill Containers Installation Instructions:

Figure numbers correspond to step numbers for easy reference.

Step 1:

Remove any old or dried pipe dope and metal burrs from top of riser pipe. Apply a gasoline resistant pipe dope on the threads of an OPW FSA-400 Face Seal Adapter and install onto the riser pipe. Torque to 125 ft- lbs min. to 250 ft-lbs max using the OPW 61SATOOL

Step 2:

Install the OPW 1-2100, OPW 1-3100, or OPW 500 Series Spill Container in accordance with the OPW Installation Instructions supplied with the product.

Step 3: (See Figures 3 and 3A)

Assemble and Install the OPW Drop Tube in accordance with the OPW Installation Instructions supplied with the

product.

Step 4: (See Figure 4)

Insert the Jack Screw Lower Cage completely into the spill container base on top of the drop tube flange with the screw pockets facing up.

Step 5: (See Figure 5)

Assemble screws into upper plate with the step facing up. Adjust the screws so that the top plate will be located just below the bottom of the threads in the spill container base when the assembly is inserted into the spill container.

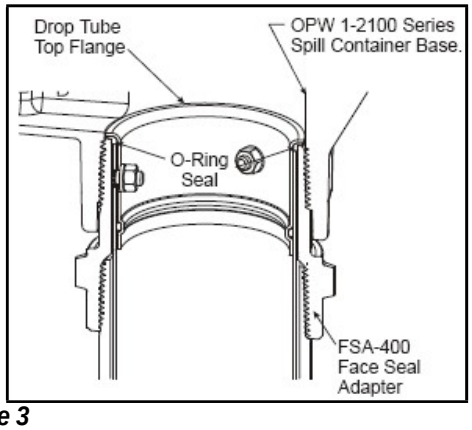

Figure 3

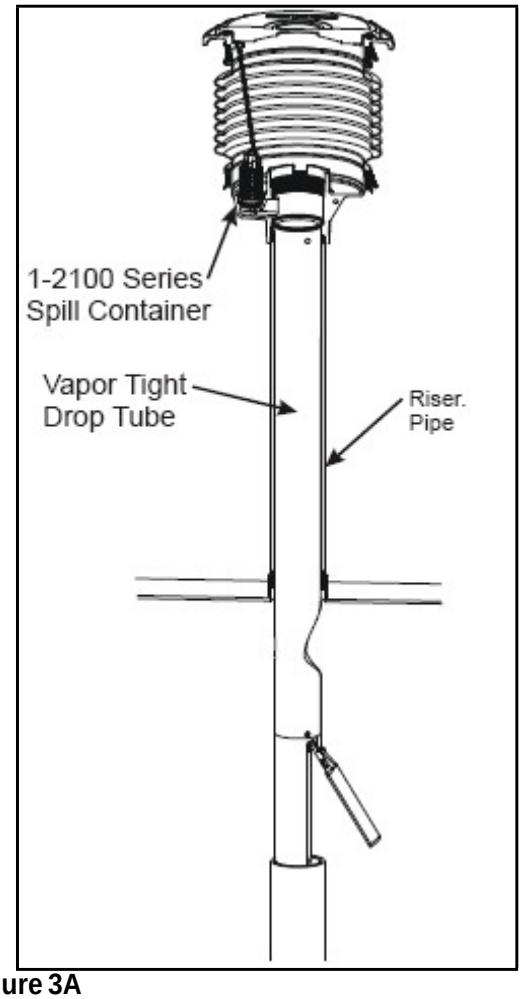

Figure 3A

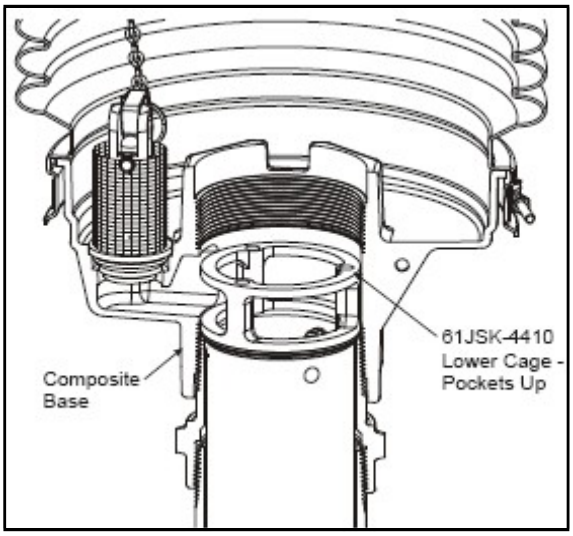

Figure 4

Step 6: (See Figure 5)

Install the Jack Screw Assembly into the spill container base. Make sure the bottoms of the three screws are seated in the pockets on the Jack Screw Lower Cage. Apply the supplied thread locker to the threads above the top plate on all three screws on the Jack Screw Top Assembly.

Step 7:

Apply a gasoline resistant pipe dope on the threads of a 4" nipple. Install the 4" nipple into the spill container and tighten securely. (Recommended torque, 4"NPT, 125 ft-lbs min. to 250 ft-lbs max.) Note: The top plate should not be in contact with the nipple at this point. If the nipple hits the top plate while being tightened lower the top plate on the Jack Screw below the threads on the spill container.

Step 8: (See Figure 8)

Using a ¼ inch Allen socket, alternately and evenly tighten the three (3) screws on the Jack Screw Assembly until the top plate contacts the bottom of the 4" nipple. Check to make sure the step in the top plate is centered in the nipple. Tighten the three (3) screws evenly and securely with a torque of 3.5 ft-lbs min. to 5.0 ft-lbs max to ensure that the drop tube flange is sealed securely to the Face Seal Adapter.

Step 9: (See Figure 9)

Assembly of the Jack Screw Kit is now complete. Proceed to installation of the OPW 61SALP-EVR Rotatable Product Adaptor and OPW 634TT or OPW 634LPC Cap in accordance with the OPW Installation Instructions supplied with the product.

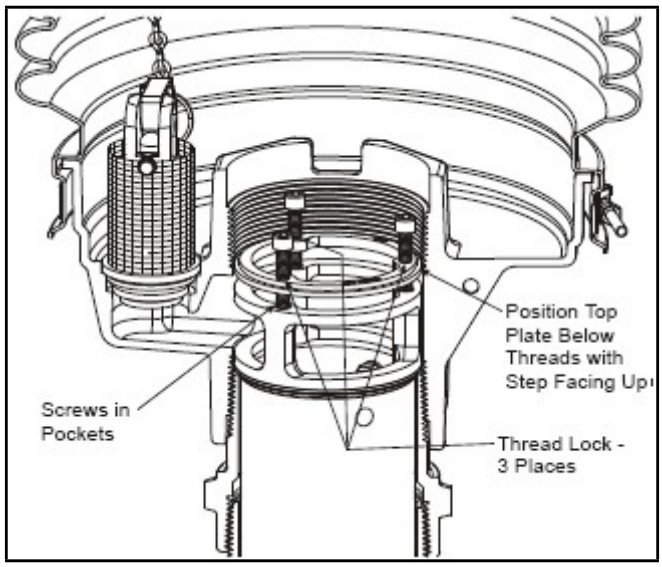

Figure 5

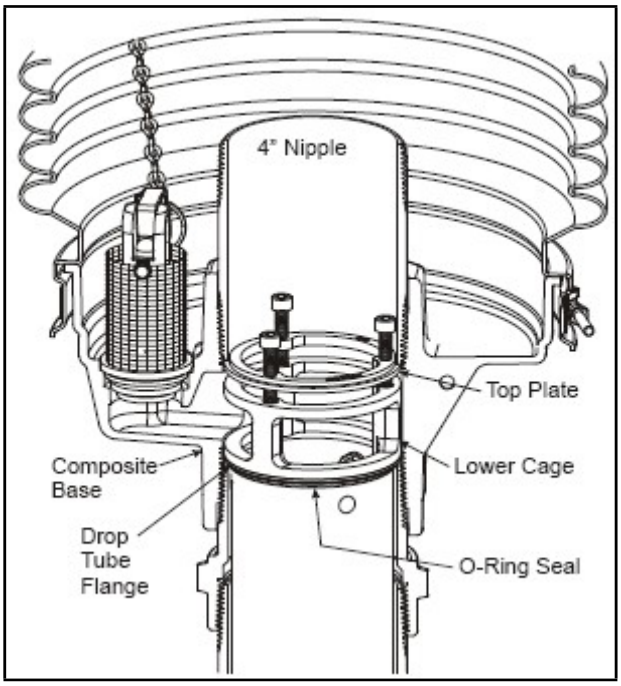

Figure 8

OPW 61JSK-44CB Jack Screw Kit for Cast Iron Base Spill Containers Installation Instructions:

Figure numbers correspond to step numbers for easy reference.

Step 1:

Remove any old or dried pipe dope and metal burrs from top of riser pipe. Apply a gasoline resistant pipe dope on the threads of an OPW FSA-400 or FSA-400-S Face Seal Adapter and install onto the riser pipe. Torque to 125 ft-lbs min. to 250 ft-lbs max using the OPW 61SA-TOOL.

NOTE: Only the cast iron base will work with the FSA-400-S (Short Face Seal Adapter). With OPW 1-3100 Double Wall Spill Containers the FSA is not required and should not be used.

Step 2:

Install the OPW 1-2100, OPW 1-3100, or OPW 500 Series Spill Container in accordance with the OPW Installation Instructions supplied with the product.

Step 3: (See Figures 3 and 3A)

Assemble and Install the OPW Drop Tube in accordance with the OPW Installation Instructions supplied with the product.

Step 4: (See Figure 4)

Insert the Jack Screw Lower Plate (plate without threads) completely into the spill container base on top of the drop tube flange with the screw pockets facing up.

Step 5: (See Figure 5)

Assemble screws into upper plate with the step facing up. Adjust the screws so that the top plate will be located just below the bottom of the threads in the spill container base when the assembly is inserted into the spill container.

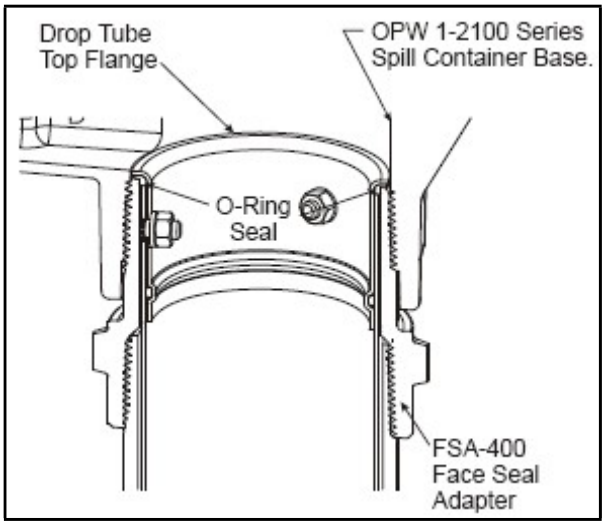

Figure 3

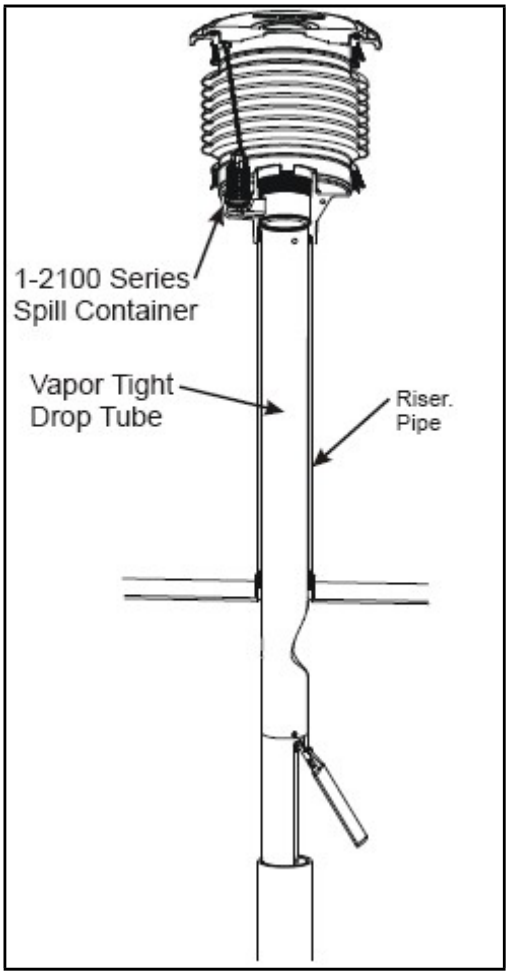

Figure 3A

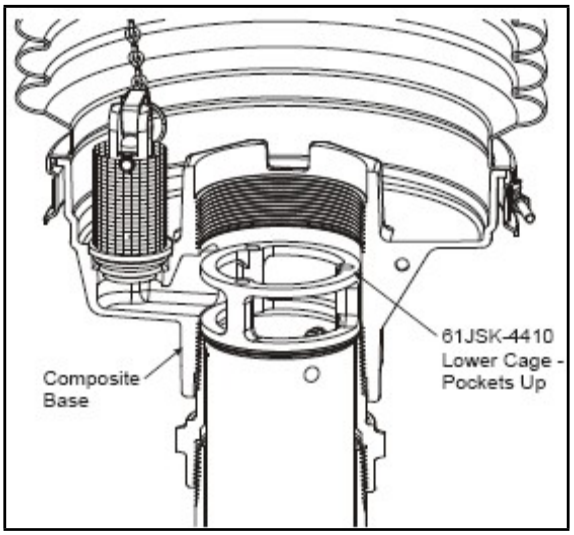

Figure 4

Step 6: (See Figure 5)

Install the Jack Screw Assembly into the spill container base. Make sure the bottoms of the three screws are seated in the pockets on the Jack Screw Lower Cage. Apply the supplied thread locker to the threads above the top plate on all three screws on the Jack Screw Top Assembly.

Step 7:

Apply a gasoline resistant pipe dope on the threads of a 4" nipple. Install the 4" nipple into the spill container and tighten securely. (Recommended torque, 4"NPT, 125 ft-lbs min. to 250 ft-lbs max.) **NOTE**: The top plate should not be in contact with the nipple at this point. If the nipple hits the top plate while being tightened lower the top plate on the Jack Screw below the threads on the spill container.

Step 8: (See Figure 8)

Using a ¼ inch Allen socket, alternately and evenly tighten the three (3) screws on the Jack Screw Assembly until the top plate contacts the bottom of the 4" nipple. Check to make sure the step in the top plate is centered in the nipple. Tighten the three (3) screws evenly and securely with a torque of 3.5 ft-lbs min. to 5.0 ft-lbs max to ensure that the drop tube flange is sealed securely to the Face Seal Adapter.

Step 9: (See Figure 9)

Assembly of the Jack Screw Kit is now complete. Proceed to installation of the OPW 61SALP-EVR Rotatable Product Adaptor and OPW 634TT or OPW 634LPC Cap in accordance with the OPW Installation Instructions supplied with the product.

Operation and Maintenance

If a leak develops at the drop tube, re-torque the (3) screws on the Jack Screw. (Torque value: 3.5 ft-lbs min. to 5.0 ft-lbs max.) If this does not correct the leak, check for burrs, clean the sealing surface on the FSA-400 and replace the o-ring on the drop tube. NOTE: Loctite 242, thread locker, must be reapplied each time the screws are adjusted.

IMPORTANT: Leave these instructions with the Station Operator.

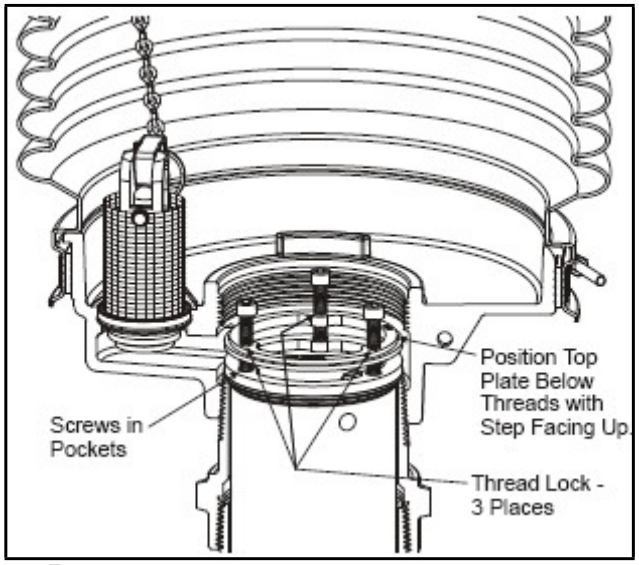

Figure 5

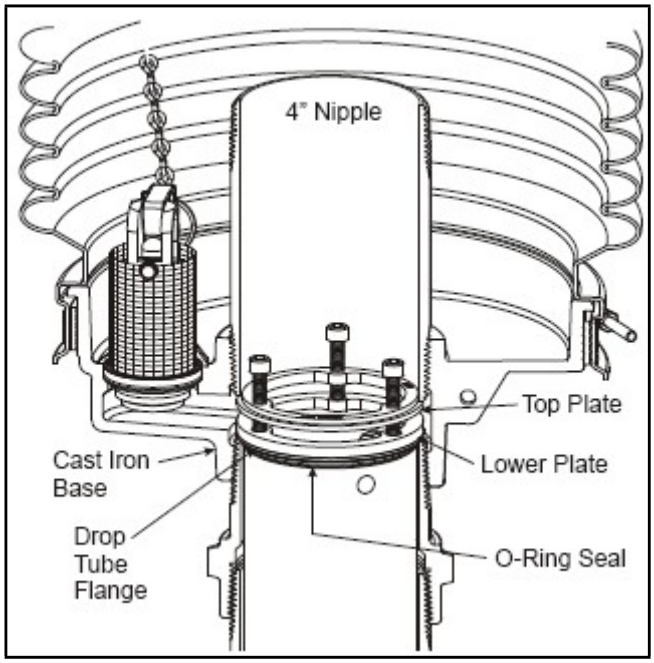

Figure 8

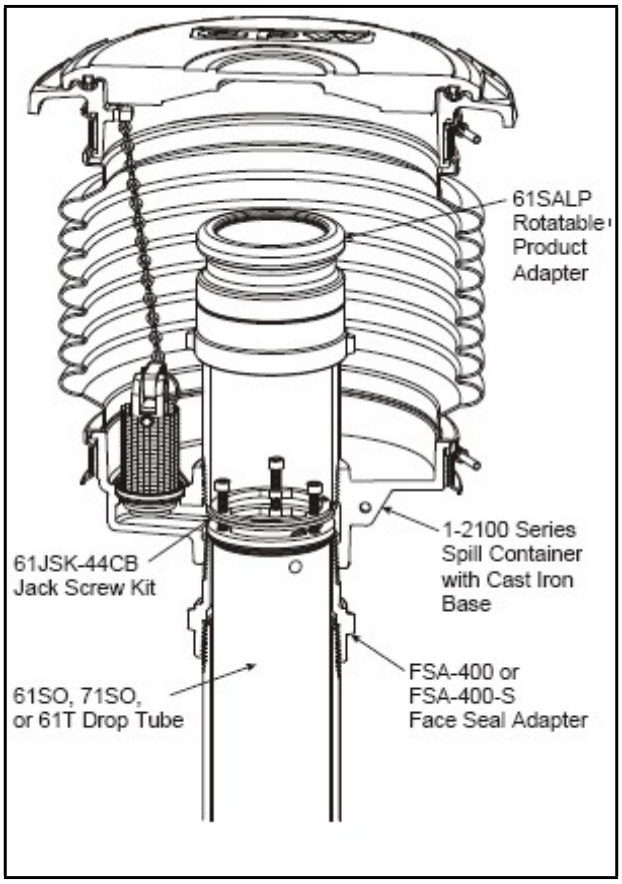

Figure 9 Cast Iron Base

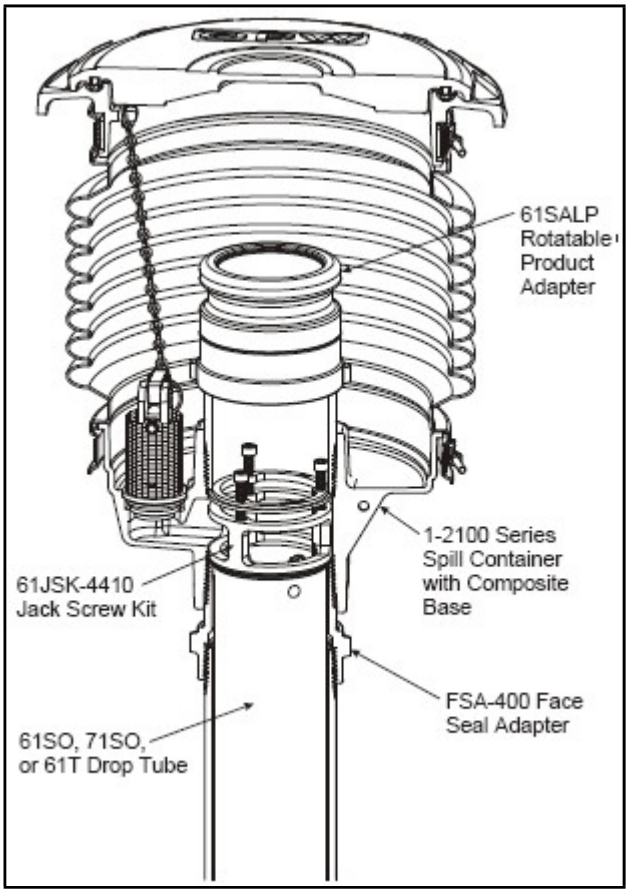

Figure 9 Composite Base

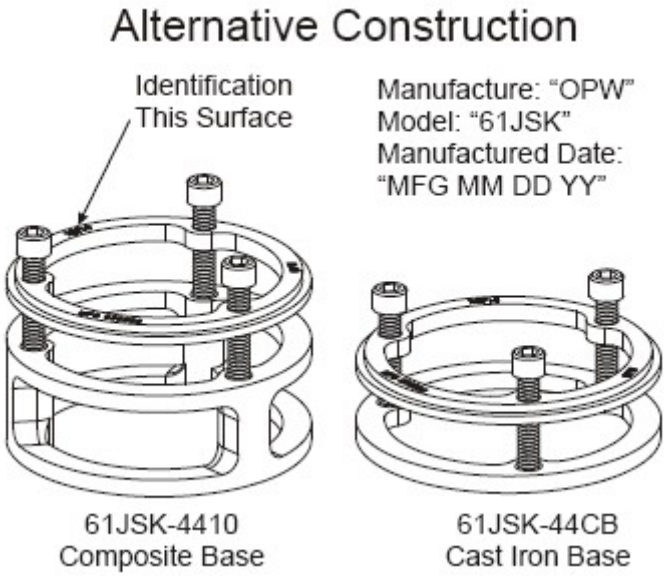

OPW
FUELING CONTAINMENT SYSTEMS

PEI MEMBER

3250 US 70 Business West
Smithfield, NC 27577
Customer Service:1-(800) 422-2525
Technical Service and Questions:
1-(877) OPW-TECH
www.opwglobal.com

Installation and Maintenance Instructions
OPW 61JSK-4RMT and 71JSK-4RMT Remote Jack Screw Kit

Please read these warnings and assembly instructions completely and carefully before starting. Failure to do so may cause product failure, or result in environmental contamination due to liquid leakage into the soil, creating hazardous spill conditions.

IMPORTANT: Check to make sure the product is intact and undamaged and all parts have been supplied. Never substitute parts for those supplied. Doing so may cause product failure.

WARNING-DANGER: Using electrically operated equipment near gasoline or gasoline vapors may result in a fire or explosion, causing personal injury and property damage. Be sure that the working area is free from such hazards, and always use proper precautions.

NOTE: At all times when product is in the storage tank keep the riser pipe capped, so the vapors cannot escape into the environment.

Notice: OPW products must be used in compliance with applicable federal, state, and local laws and regulations. Product selection should be based on physical specifications and limitations and compatibility with the environment and material to be handled. All illustrations and specifications in this literature are based on the latest production information available at the time of publication. Prices, materials, and specification are subject to change at any time, and models may be discontinued at any time, in either case, without notice or obligation.

Notice: Flex- Works by OPW, Inc., VAPORSAVER™ and all other OPW products must be used in compliance with all applica- ble federal, state, provincial and local laws, rules and regulations. Product selection is the sole responsibility of the customer and/or its agents and must be based on physical specifications and limitations, compatibility with the environment and material to be handled. All illustrations and specifications in this literature are based on the latest production information available at the time of publication. Prices, materials and specifications are subject to change at any time, and models may be discontinued at any time, in either case, without notice or obligation.

This section intentionally left blank.

Date of manufacture on this product is located on the upper jack screw plate.

61JSK-4RMT and 71JSK-4RMT Performance Specifications:

This OPW Jack Screw Kit is designed to lock an OPW Overfill Prevention Valve or OPW Straight Drop Tube into a 4" Pipe Tee and Make a Remote system vapor tight inside a sump.

Torque Specification

5/16-18 Screw, 6.0 ft-lbs minimum to 7.0 ft-lbs maximum.

4" Nipple, 125 ft-lbs minimum to 250 ft-lbs maximum. 4"

NPT Thread, 125 ft-lbs minimum to 250 ft-lbs maximum.

IMPORTANT: The figures in this installation and maintenance instruction may contain vapor recovery equipment (including model numbers) that is not certified by the California Air Resources Board (CARB) for a specific Phase I Vapor Recovery System. Please refer to Exhibit 1 of the appropriate CARB Phase 1 Executive Order for a list of certified Phase ! Vapor Recovery System Equipment.

This section intentionally left blank.

OPW 61JSK-4RMT and 71JSK-4RMT Remote Jack Screw Kit Installation Instructions:

Items in 61JSK-4RMT and 71JSK-4RMT Kit: 62M Cap and Adaptor, Trap Door, Stepped Seal, Flat Seal, Three Screws, Upper Plate and Lower Cage.

Step 1:

Install the remote OPW Spill Container in accordance with the OPW Installation Instructions supplied with the product. Note: The FSA-400-(S) is not required. For remote piping follow pipe manufacturers' installation instructions and local agency requirements.

Step 2:

Clean the top of the riser pipe coming from the top of UST. Apply a gasoline resistant pipe dope on the threads of an OPW FSA-400-(S) Face Seal Adapter and install onto the riser pipe. Torque from 125 ft-lbs min. to 250 ft-lbs max using the OPW 61SA-TOOL.

Step 3: (See Figure 2)

Install the 4" Tee onto the OPW FSA-400-(S) Face Seal Adapter with a gasoline resistant pipe dope, which is installed onto the riser pipe. Torque from 125 ft-lbs min. to 250 ft-lbs max. With the 4" Tee assembled, install the OPW Overfill Prevention Valve or OPW Straight Drop Tube in accordance with the OPW Installation Instruc-

tions supplied with the product.

Step 4: (See Figure 2)

Install the Jack Screw assembly into the Tee. Make sure the bottoms of the three screws are seated in the pockets on the Jack Screw Lower Cage (as shown).

Typical Installation

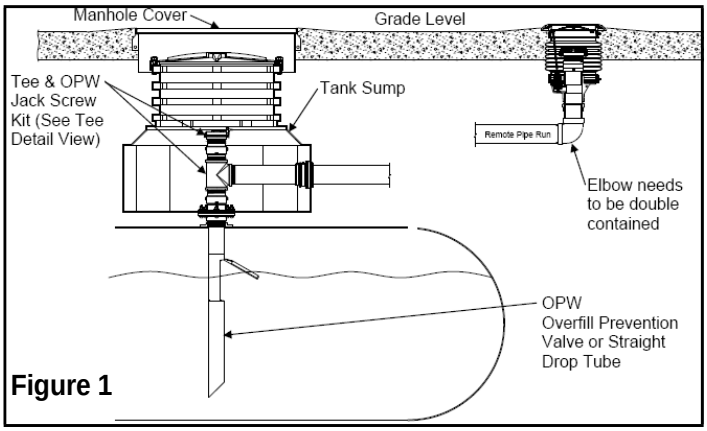

Figure 1

Step 5: (See Figure 2)

Assemble screws into upper plate. Adjust the screws so that the top plate will be located just below the bottom of the threads of the Tee. Apply the supplied thread locker to the threads above the top plate on all three screws of the Jack Screw Top Assembly.

Step 6: (See Figure 2)

Apply a gasoline resistant pipe dope on the threads of the pipe nipple. Install the nipple into the Tee and tighten securely. Torque nipple from 125 ft-lbs min. to 250 ft-lbs max.

NOTE: The top plate should not be in contact with the nipple at this point. If the nipple hits the top plate while being tightened, adjust the top plate down by turning each screw counter clockwise, lower the top plate on the Jack Screw, and then reinstall the nipple.

Step 7: (See Figure 2)

Using a ¼" Allen wrench, alternately and evenly tighten the three (3) screws clockwise on the Jack Screw Assembly until the Upper Plate contacts the bottom of the 4" nipple. Make sure that the step in the Upper Plate is completely inside of the 4" nipple. Tighten the three (3) screws evenly and securely with 6.0 ft-lbs minimum to 7.0 ft-lbs maximum torque to ensure that the drop tube flange is sealed securely to the OPW FSA-400-(S).

Step 8: (See Figures 2 and 3)

To prevent a liquid overflow, the trap door must be installed on the sticking port of the riser or over the top of the riser that contains an overfill valve that does not have a fixed non-removable cap. Remove the flat seal from the 62M Cap. The stepped seal and flat seal should be installed into the 62M Cap as shown in Figure 3 with trap door assembly gasket side down. If the opening over the 4" Tee is not the sticking port, a permanent 4" pipe cap must be installed.

Step 9: (See Figures 2 and 3)

Proceed with installation of the OPW 62M Cap and Adaptor in accordance with the OPW Installation Instructions supplied with the products. Install 62M Cap with trap door assembly and seals onto the top of a FSA-400-(S) Face Seal Adaptor which is installed onto the pipe nipple. Note: Do not remove the pipe plug installed in the top of the cap.

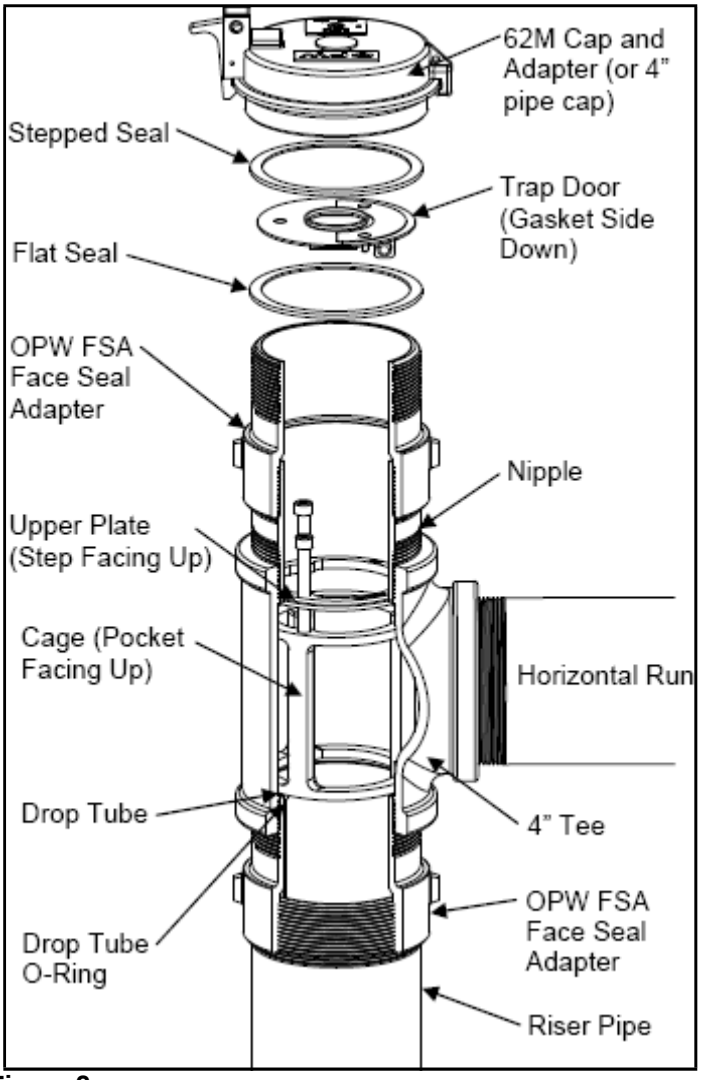

Figure 2

Operation and Maintenance:

If a leak develops at the drop tube: Re-torque the (3) screws on the Jack Screw. (Torque value: 6.0 ft-lbs min. to 7 ft-lbs max.) If this does not correct the leak, check for burrs, clean the sealing surface on the FSA-400-(S) and replace the o-ring on the drop tube. **NOTE**: Loctite 242, thread locker, must be reapplied each time the screws are adjusted.

IMPORTANT: Leave these instructions with the Station Operator.

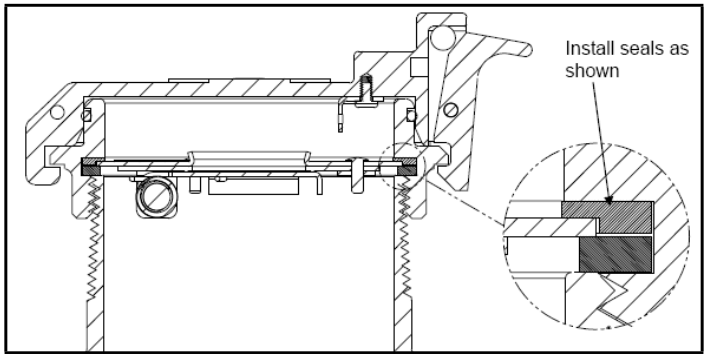

Figure 3

Product Identification

Manufacture: "OPW"

Model: "61JSK"

Manufacture Date: "MFG MM DD YY" where MM=Month, DD=Day and YY=Year.

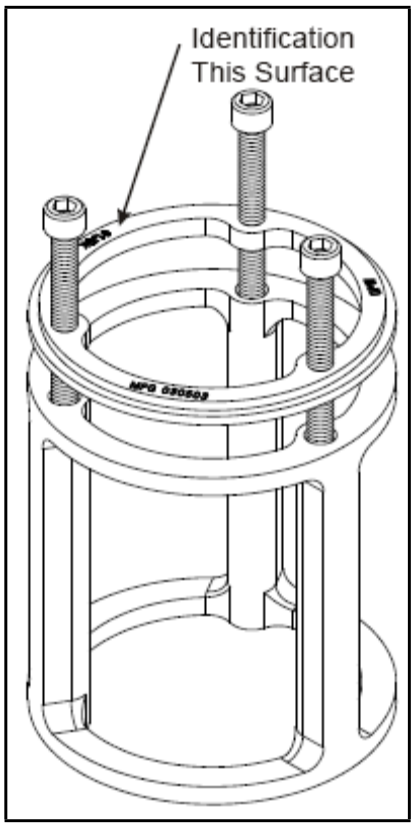

Figure 4

OPW
FUELING CONTAINMENT SYSTEMS

PEI MEMBER

3250 US 70 Business West
Smithfield, NC 27577
Customer Service:1-(800) 422-2525
Technical Service and Questions:
1-(877) OPW-TECH
www.opwglobal.com

OPW 61JSK-4410 Alternate Remote Fill Configuration Installation and Maintenance Instructions

Please read these warnings and assembly instructions completely and carefully before starting. Failure to do so may cause product failure, or result in environmental contamination due to liquid leakage into the soil, creating hazardous spill conditions.

IMPORTANT: Check to make sure the product is intact and undamaged and all parts have been supplied. Never substitute parts for those supplied. Doing so may cause product failure.

WARNING-DANGER: Using electrically operated equipment near gasoline or gasoline vapors may result in a fire or explosion, causing personal injury and property damage. Be sure that the working area is free from such hazards, and always use proper precautions.

NOTE: At all times when product is in the storage tank keep the riser pipe capped, so the vapors cannot escape into the environment.

Notice: OPW products must be used in compliance with applicable federal, state, and local laws and regulations. Product selection should be based on physical specifications and limitations and compatibility with the environment and material to be handled. All illustrations and specifications in this literature are based on the latest production information available at the time of publication. Prices, materials, and specification are subject to change at any time, and models may be discontinued at any time, in either case, without notice or obligation.

This section intentionally blank

This Section Intentionally Blank

This Section Intentionally Blank

61JSK Performance Specifications:

The alternate remote fill configuration of the OPW Jack Screw Kit is designed to lock an OPW 61SO or 71SO Series Overfill Valve or 61T Drop Tube into a 4″ x 4″ x 2″ tee below the outlet of the drain valve in the spill container base.

Torque Specification:
5/16-18 Screw, 3.5 ft-lbs (42 in-lbs) minimum to 5.0 ft-lbs (60 in-lbs) maximum.

4" Nipple, 125 ft-lbs minimum to 250 ft-lbs maximum.

4″ NPT Thread, 125 ft-lbs minimum to 250 ft-lbs maximum.

Note: All 4″ NPT threads are to be torqued progressively lower from the tank up.

IMPORTANT: The figures in this installation and maintenance instruction may contain vapor recovery equipment (including model numbers) that is not certified by the California Air Resources Board (CARB) for a specific Phase I Vapor Recovery System. Please refer to Exhibit 1 of the appropriate CARB Phase I Executive Order for a list of certified Phase I Vapor Recovery System Equipment.

OPW ALTERNATE REMOTE FILL CONFIGURATION 61JSK-4410 JACK SCREW KIT INSTALLATION INSTRUCTIONS:

Step 1
Remove any old or dried pipe dope and metal burrs from top of riser pipe. Apply a gasoline resistant pipe dope on the threads of an OPW FSA-400 or FSA-400-S Face Seal Adapter and install onto the riser pipe. Torque to 125 ft-lbs min. to 250 ft-lbs max using the OPW 61SA-TOOL.

Step 2:
Apply a gasoline resistant pipe dope on the threads of the OPW FSA Adapter. Install a 4″ x 4″ x 2″ tee onto the Face Seal Adapter as shown. Torque to 125 ft-lbs min. to 250 ft-lbs max.

Step 3:
Assemble and Install the OPW Drop Tube in accordance with the OPW Installation Instructions supplied with the product.

Step 4:
Insert the Jack Screw Lower Cage completely into the tee on top of the drop tube flange with the screw pockets facing up.

Step 5:
Assemble screws into upper plate with the step facing up. Adjust the screws so that the top plate will be located just below the bottom of the threads in the top of the tee when the assembly is inserted into the tee.

Step 6:
Install the Jack Screw Assembly into the tee. Make sure the bottoms of the three screws are seated in the pockets on the Jack Screw Lower Cage. Apply the supplied thread locker to the threads above the top plate on all three screws on the Jack Screw Top Assembly.

Step 7:
Apply a gasoline resistant pipe dope on the threads of an OPW FSA-400 or FSA-400-S Face Seal Adapter and a 4″ nipple. Install the face seal adapter into the tee and tighten securely. (Recommended torque, 4" NPT, 125 ft-lbs min. to 250 ft-lbs max.) (Note: 4″ nipples are available from OPW). Install the 4" nipple into the face seal adapter and tighten securely. (Recommended torque, 4" NPT, 125 ft-lbs min. to 250 ft-lbs max.) Install spill container (OPW 1-2100, OPW 1-3100, or POMECO 500 Series) and/or face seal adapter onto 4″ nipple using gasoline resistant pipe dope on the threads in accordance with the OPW Installation Instructions supplied with the product. (Recommended torque, 4" NPT, 125 ft -lbs min. to 250 ft-lbs max.)

Note: The top plate should not be in contact with the face seal adapter at this point. If the face seal adapter hits the top plate while being tightened lower the top plate on the Jack Screw below the threads on the tee.

Step 8:
Using a ¼ inch Allen socket, alternately and evenly tighten the three (3) screws on the Jack Screw Assembly until the top plate contacts the bottom of the 4" nipple. Check to make sure the step in the top plate is centered in the upper face seal adapter. Tighten the three (3) screws evenly and securely with a torque of 3.5 ft-lbs min. to 5.0 ft-lbs max to ensure that the drop tube flange is sealed securely to the lower Face Seal Adapter. If a remote line is not used in the 2″ side of the tee, then the tee must be plugged.

Operation and Maintenance:
If a leak develops at the drop tube, re-torque the (3) screws on the Jack Screw. (Torque value: 3.5 ft-lbs min. to 5.0 ft-lbs max.) If this does not correct the leak, check for burrs, clean the sealing surface on the FSA and replace the o-ring on the drop tube. **NOTE:** Loctite 242, thread locker, must be reapplied each time the screws are adjusted.

IMPORTANT: Leave these instructions with the Station Operator.

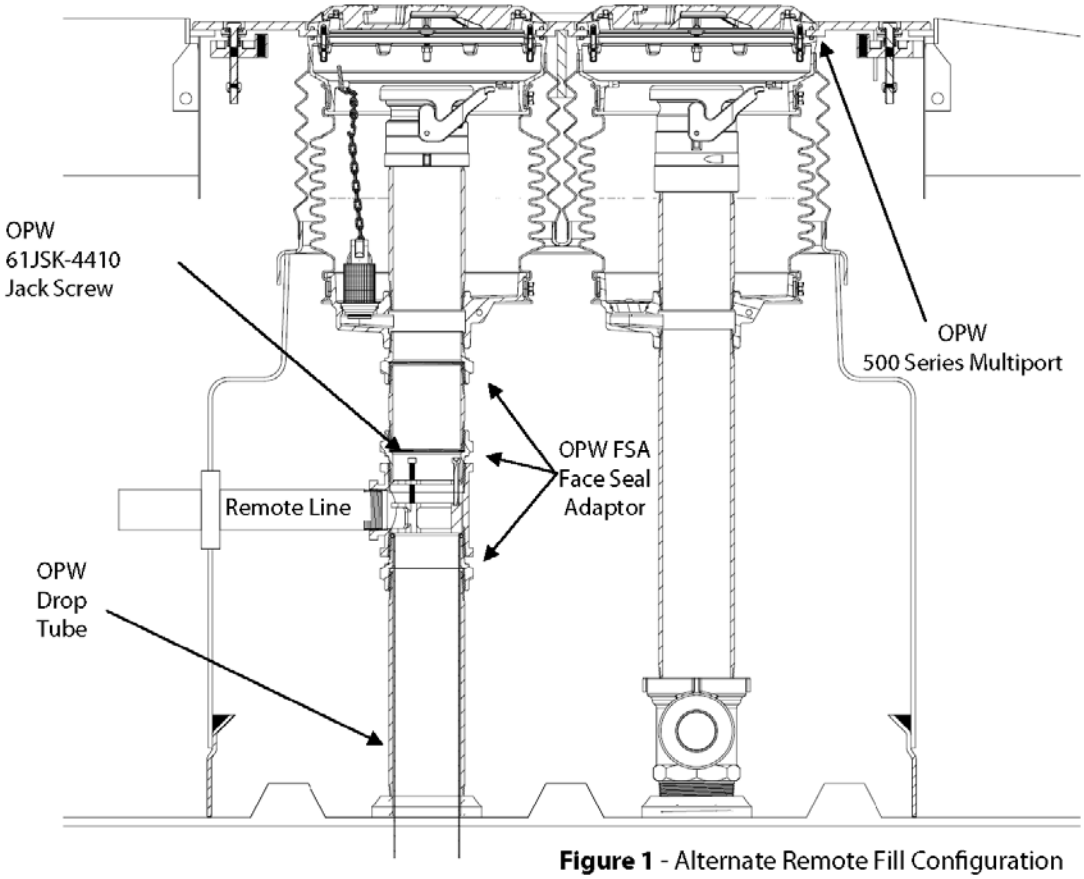

Figure 1 - Alternate Remote Fill Configuration

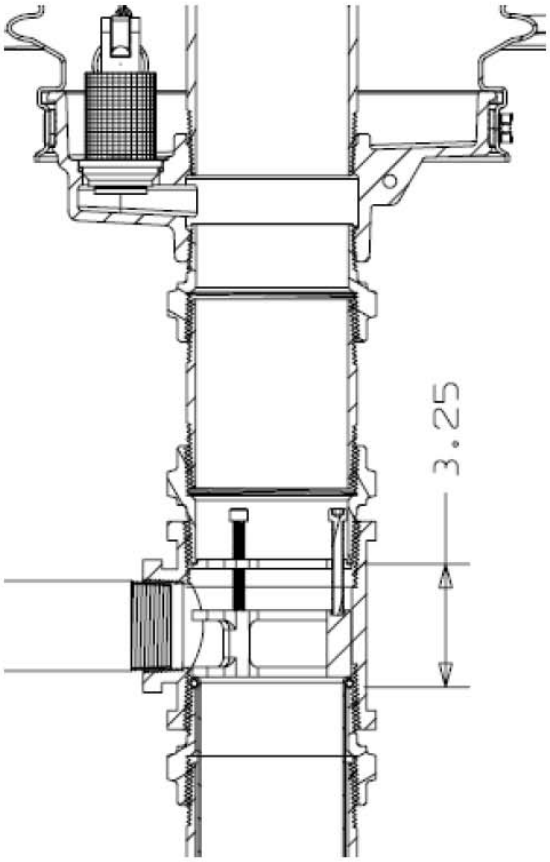

Alternative Construction

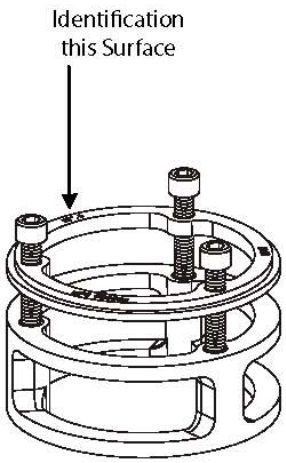

Manufacturer: OPW
Model: 61JSK
Manufactured Date:
"MFG MM DD YY"

61JSK-4410 Composite Base Alternate Remote Fill

Figure 2 - Alternate Remote Fill Cross Section

OPW RETAIL FUELING
A DOVER COMPANY

OPW Retail Fueling
3250 US 70 Business West
Smithfield, NC 27577
Customer Service:1-(800) 422-2525
Technical Service and Questions:
1-(877) OPW-TECH
www.opwglobal.com

PEI MEMBER

Part Number: 206206
Issue Date: 09-27-13
Supercedes: 07-01-13 REV A

Notice: OPW-FCS products must be used in compliance with applicable federal, state, provincial and local laws and regulations. Product selection should be based on physical specifications and limitations and compatibility with the environment and material to be handled. OPW-FCS makes no warranty of fitness for a particular use. All illustrations and specifications in this literature are based on the latest production information available at the time of publication. Prices, materials and specifications are subject to change at any time, and models may be discontinued at any time, in either case, without notice or obligation. For complete OPW-FCS warranty information, visit our web site at www.opwglobal.com.

Installation and Maintenance Instructions OPW Face Seal Adaptor FSA-400 and FSA-400-S

IMPORTANT: Please read these warnings and assembly instructions completely and carefully before starting. Failure to do so may cause product failure, or result in environmental contamination due to liquid leakage into the soil, creating hazardous spill conditions.

IMPORTANT: Check to make sure the product is intact and undamaged and all parts have been supplied. Never substitute parts for those supplied. Doing so may cause product failure.

WARNING-DANGER: Using electrically operated equipment near gasoline or gasoline vapors may result in a fire or explosion, causing personal injury and property damage. Be sure that the working area is free from such hazards, and always use proper precautions.

Notice: OPW products must be used in compliance with applicable federal, state, and local laws and regulations. Product selection should be based on physical specifications and limitations and compatibility with the environment and material to be handled. All illustrations and specifications in this literature are based on the latest production information available at the time of publication. Prices, materials, and specification are subject to change at any time, and models may be discontinued at any time, in either case, with- out notice or obligation.

Notice: Flex- Works by OPW, Inc., VAPORSAVER™ and all other OPW products must be used in compliance with all applicable federal, state, provincial and local laws, rules and regulations. Product selection is the sole responsibility of the customer and/or its agents and must be based on physical specifications and limitations, compatibility with the environment and material to be handled. All illustrations and specifications in this literature are based on the latest production information available at the time of publication. Prices, materials and specifications are subject to change at any time, and models may be discontinued at any time, in either case, without notice or obligation.

This section intentionally left blank.

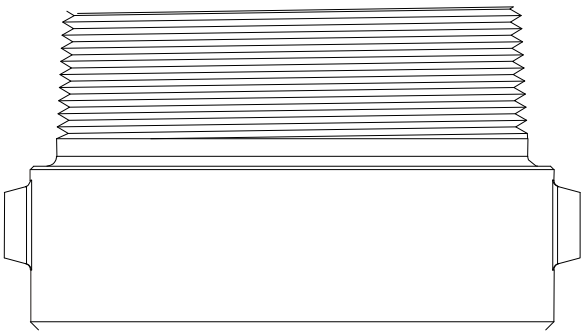

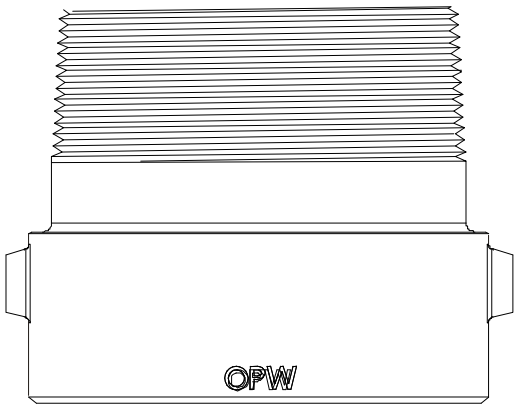

FSA-400

Date of manufacture on this product is located on the outside diameter of the body.

PRODUCT IDENTIFICATION:

Manufacture: "OPW"

Model (On opposite side of manufacture): "FSA-400" or "FSA-400-S"

OPERATION AND MAINTENANCE:

1. Apply non-hardening, gasoline-resistant, pipe thread seal compound to the threads.
2. Tighten the FSA-400 or FSA-400@ onto the riser with a torque of 125 ft-lbs minimum to 250 ft-lbs maximum. Use the OPW 61SA-TOOL to install.

This Section Intentionally Left Blank.

This page intentionally left blank.

3250 US 70 Business West
Smithfield, NC 27577
Customer Service:1-(800) 422-2525
Technical Service and Questions:
1-(877) OPW-TECH
www.opwglobal.com

OPW 61T Drop Tube
Installation and Maintenance Instructions

IMPORTANT: Please read these warnings and assembly instructions completely and carefully before starting. Failure to do so may cause product failure, or result in environmental contamination due to liquid leakage into the soil, creating hazardous spill conditions.

WARNING-DANGER: Using electrically operated equipment near gasoline or gasoline vapors may result in a fire or explosion, causing personal injury and property damage. Be sure that the working area is free from such hazards, and always use proper precautions.

Notice: OPW products must be used in compliance with applicable federal, state, and local laws and regulations. Product selection should be based on physical specifications and limitations and compatibility with the environment and material to be handled. All illustrations and specifications in this literature are based on the latest production information available at the time of publication. Prices, materials, and specification are subject to change at any time, and models may be discontinued at any time, in either case, with- out notice or obligation.

Notice: Flex- Works by OPW, Inc., VAPORSAVER™ and all other OPW products must be used in compliance with all applicable federal, state, provincial and local laws, rules and regulations. Product selection is the sole responsibility of the customer and/or its agents and must be based on physical specifications and limitations, compatibility with the environment and material to be handled. All illustrations and specifications in this literature are based on the latest production information available at the time of publication. Prices, materials and specifications are subject to change at any time, and models may be discontinued at any time, in either case, without notice or obligation.

This section intentionally left blank.

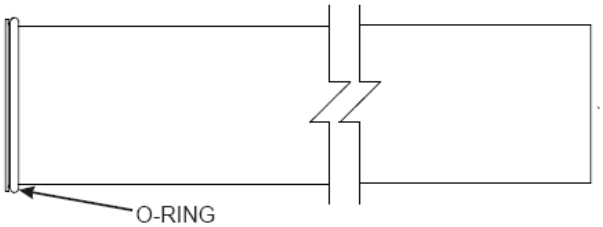

Installation Instructions:

1. Cut the tube to a length so that it is not more than 6” from the bottom of the tank. The tube can be cut at a 45-degree angle or per lo- cal codes or requirements. File off any sharp burrs.

Operation and Maintenance:

Annually: Test the drop tube seal with CARB procedure TP-201.1C or TP-201.1D. If the drop tube seal passes testing, no further maintenance is required. If the drop tube seal fails testing, replace the drop tube seal with OPW P/N: H11931M for 4” Tubes. Re-test the drop tube seal with CARB procedure TP-201.1C or TP-201.1.

OPW
FUELING CONTAINMENT SYSTEMS

PEI MEMBER

3250 US 70 Business West
Smithfield, NC 27577
Customer Service:1-(800) 422-2525
Technical Service and Questions:
1-(877) OPW-TECH
www.opwglobal.com

61SO Vapor Tight Overfill Prevention Valves Assembly, Installation and Maintenance Instructions

IMPORTANT INFORMATION

FOLLOW ALL INSTRUCTIONS

Please read these warnings and use and assembly instructions completely and carefully before starting. Failure to do so may cause product failure, or result in environmental contamination due to liquid leakage into the soil, creating hazardous spill conditions.

Notice: Flex- Works by OPW, Inc., VAPORSAVER™ and all other OPW products must be used in compliance with all applicable federal, state, provincial and local laws, rules and regulations. Product selection is the sole responsibility of the customer and/or its agents and must be based on physical specifications and limitations, compatibility with the environment and material to be handled. All illustrations and specifications in this literature are based on the latest production information available at the time of publication. Prices, materials and specifications are subject to change at any time, and models may be discontinued at any time, in either case, without notice or obligation.

TThis	

This section intentionally left blank.

This section intentionally left blank.

Date of manufacture on this product is located on the flat area of the valve body, under float.

GENERAL INSTRUCTIONS

The OPW 61SO Overfill Prevention Valve is designed for tight fill, gravity drop applications to help prevent accidental or intentional overfilling of underground storage tanks. It is installed in the UST drop tube in place of a standard drop tube.

The main 61SO valve closes when liquid level is at 95% of the top of the tank reaches the initial shut off point. A small bypass valve remains open to allow the delivery hose to drain at 3-5 gallons per minute. If the delivery truck valve is not closed after initial shut-off, the bypass valve will close and will restrict all fuel delivery to ensure that the top of the tank is not wetted per EPA requirements.

The 61SO EVR approved models of the 61SO are designed to be installed with the following OPW products: Face Seal Adaptor, OPW Spill Container or Multi-port, Jack Screw Kit, Rotatable Product Adaptor, and Product Cap.

IMPORTANT

Read these assembly and installation instructions completely and carefully prior to starting. Check to make sure all parts have been provided. Use only the parts supplied; substitution of parts may cause product failure.

Failure to follow instructions may cause improper product operation or premature failure which may permit storage tank overfill. An overfilled storage tank may create hazardous conditions and/or environmental contamination.

CAUTION

Do not remove elastic band from around float until instructed to do so, as damage to valve may result.

WARNING

Failure to properly connect delivery hose and elbow, and/or disconnecting a liquid filled delivery hose or elbow will result in a hazardous spill, which may result in personal injury, property damage, fire, explosion, and water and soil pollution.

- Make sure all connections, including the hose and elbow connections, between storage tank and transport are securely coupled.
- Make sure the lip seal and/or all gaskets in the delivery elbow are properly in place to prevent spills.
- Do not operate with damaged or missing parts, which prevent tight connections.

Normal Operation: A Hose ”Kick” and reduced flow

signal that the tank is full. Close transport delivery valve and drain hose into tank before disconnecting any hose fitting.

Overfilled Tank: Failure of the hose to drain after closing the delivery valve signals an overfilled tank. Do Not disconnect any delivery hose fitting until the liquid level in the tank has been lowered to allow the hose to drain into the tank.

WARNING

In the event you are splashed with fuel remove wet clothing immediately. Skin contact with gasoline can cause chemical burns and may result in inhalation of vapors that may be fatal. Never go inside confined areas after being splashed and never go near ignition sources.

IMPORTANT

Determine if the underground storage tank is equipped with a ball float vent valve, as illustrated in Figure 16. In all systems, the shut-off point of the 61SO must be reached before the ball float reduces flow to ensure proper overfill valve operation.

TOOLS NEEDED FOR INSTALLATION AND ASSEMBLY:

1. Drill
2. A sharp 1/8” pilot drill bit
3. A sharp 5/16” drill bit
4. Tape measure
5. Hacksaw or cut-off saw, fine tooth; 24 teeth/inch
6. Fine half round file
7. Screwdriver - Phillips blade
8. 1/2” Wrench or socket
9. Two-part sealant (Supplied)
10. Torque Wrench

WARNING

Using electrically operated equipment near gasoline or gasoline vapors may result in fire or explosion, causing personal injury and property damage. Check to assure the working area is free from such hazards, and always use proper precautions.

IMPORTANT: The figures in this installation and maintenance instruction may contain vapor recovery equipment (including model numbers) that is not certified by the California Air Resources Board (CARB) for a specific Phase I Vapor Recovery System. Please refer to Exhibit 1 of the appropriate CARB Phase I Executive Order for a list of certified Phase I Vapor Recovery System Equipment.

HOW TO LOCATE THE POSITION OF THE 61SO AT 95% TANK CAPACITY
(Shut-off points can be adjusted to any capacity to comply with AHJ Requirements)

The length of the upper tube and the placement of the 61SO valve body determine the shut-off point. Following the standard instructions for the OPW 61SO will provide for initial shutoff at 95%. In all cases, the upper tube length must be a minimum of 6-1/2" plus the length of the riser pipe. All length measurements are in inches.

INSTRUCTIONS

1) Find tank capacity (in gallons) from tank calibration chart provided by tank manufacturer.
2) Calculate 95% of capacity
3) Locate the 95% volume number on the tank calibration chart.
4) Find the dipstick number (X) which corresponds to the 95% tank volume. And, find the dipstick number (Y) which corresponds to the 100% volume.
5) Subtract the dipstick number (X) from the tank diameter (Y) to find the upper tube reference number (Z).

   (Y) - (X) = (Z)

6) Subtract 2" from (Z) to find the upper tube depth (C).

   (Z) - 2" = C

7) Is C less than 6-1/2"?

NO Upper tube length is C plus the distance from the top of the Face Seal Adaptor installed on the riser pipe to the inside, top lip of the storage tank (A).

Upper Tube Length = C + (A)

YES Upper tube length is 6-1/2” plus the riser pipe measurement (A).

Upper Tube Length = 6-1/2” + (A)

NOTE: You must find the actual tank capacity number that correlates to the 6-1/2” + (A) depth for the station records. This number may also be used for the purposes of calibrating an electronic tank level system.

®Registered T.M. - Owens Corning Fiberglass Corporation

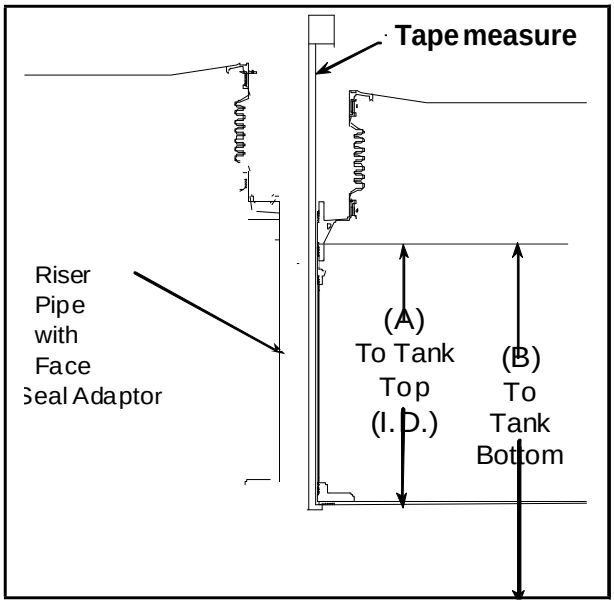

EXAMPLE

1) For an Owens-Corning Model G-3 Fiberglass® Tank Calibration Chart:
   Tank Capacity - 10,000 gal., nominal 9,403 gal.
   NOTE: Use actual capacity only
2) 95% of actual tank capacity = 0.95 x 9403 gal. = 8933 gal.
3) The closest number which is less than 8933 gal. Is 8910 gal. Choosing the closest number less than 95% of actual capacity ensures that the initial shutoff will occur when the tank is no more than 95% full.
4) The calibration chart reading of 8910 gal. corresponds to a dipstick measurement of 82”.
5) Dipstick number (X) = 82”
   Tank diameter (Y) = 92”
   (Y) - (X) = (Z) (92” - 2” = 10”)
   (Z) = 10”
6) (Z) - 2” = C (10” - 2” = 8”)
   C=8”
7) Is 8” less than 6-1/2”?

NO Measure the distance from the top of the FSA-400 Face Seal Adaptor installed on the riser pipe to the inside, top lip of the storage tank and obtain measurement (A).

Upper tube length = C + (A)

ASSEMBLY INSTRUCTIONS

IMPORTANT: Each of the numbered steps in the installation instructions are designed as a CHECK LIST to ensure proper installation and trouble free operation of the OPW 61SO Overfill Prevention Valve.

Read and follow these steps carefully, checking them off as you proceed.

Figure numbers correspond to step numbers for easy reference.

STEP 1: MEASURE

Install the OPW Face Seal Adaptor and the OPW Thread-on Spill Container on the Fill Riser (Refer to the Installation Instructions Supplied with the Spill Container). Insert a tape measure through the riser pipe and hook it under the inside of the tank in the lengthwise direction.

Measure the distance from the top of the Face Seal Adaptor threads inside the base of the spill container bucket just below the drain valve outlet window to the inside, top lip of the storage tank (Dim. “A”) **(See Figure 1 &1A).**

The top flange on the 61SO will rest on the Face Seal Adaptor just below the drain valve outlet, and be locked in place between the Face Seal Adaptor and the 4" nipple that is installed in the spill container with the Jack Screw Kit **(See Figure 1A).** (For riser pipe configurations other than that shown, consult installation drawings or use other necessary means to measure Dimension “A”).

Using a tape measure, measure the distance from the top of the Face Seal Adaptor in the spill container to the bottom of the tank **(**Dim. “B”).

I**MPORTANT:** Inspect the riser pipe for any foreign material. Over spray from tank relining or any internal burrs inside of pipe must be removed prior to installation. Failure to have an unobstructed riser pipe may prevent proper installation and operation of the valve. The 61SO is designed for installation into schedule 40 riser pipes. The 61SO cannot be installed into schedule 80 riser pipes.

STEP 2: MARK THE TUBE

Use the result from Step 1 and ***HOW TO LOCATE THE POSITION OF THE 61SO AT 95% TANK CAPACITY*** to mark the upper tube. Measure the distance from the point where the upper tube and valve body meet. For “C” measurements greater than 6- 1/2” use tape measure to mark the calculated upper tube length onto the upper tube.

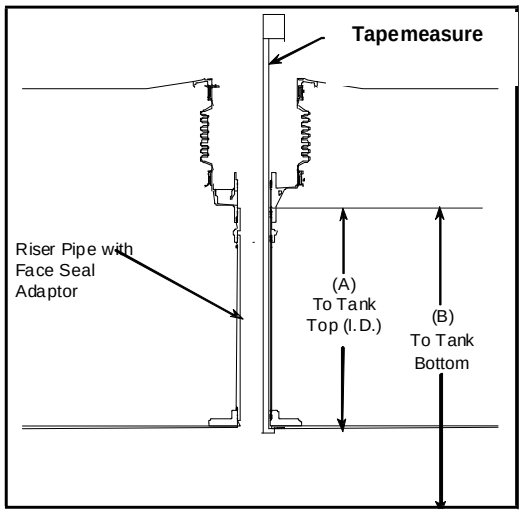

Figure 1

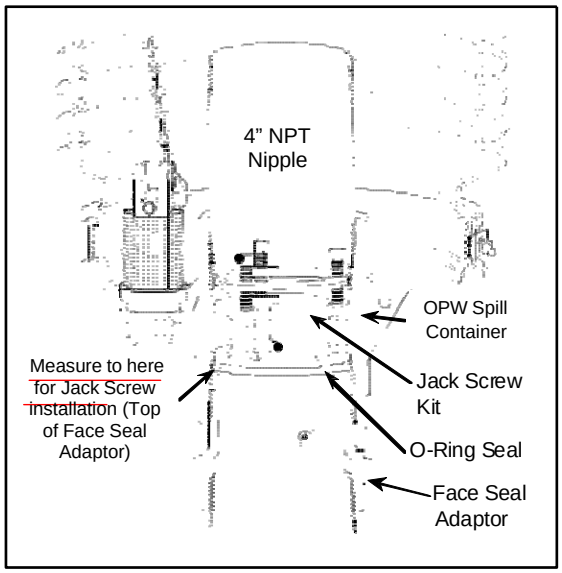

Figure 1A

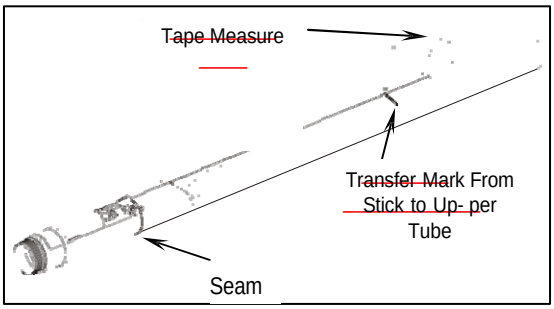

Figure 2

(For "C" less than or equal to 6-1/2" only)

STEP 3: CUT THE UPPER DROP TUBE

Carefully saw through the tube squarely, at the mark made in Step 2. Use a hacksaw with a new fine-tooth blade. Rotating the upper tube as the sawing progresses will minimize run out and ensure a square 90-degree cut. A piece of paper, taped square with the tube or a hose clamp can be used as guides for making a square cut.

<u>CAUTION</u> - DO NOT use a pipe or tubing cutter to cut the upper drop tube, this may damage the tube, causing it to be out of round thereby prohibiting assembly of the unit.

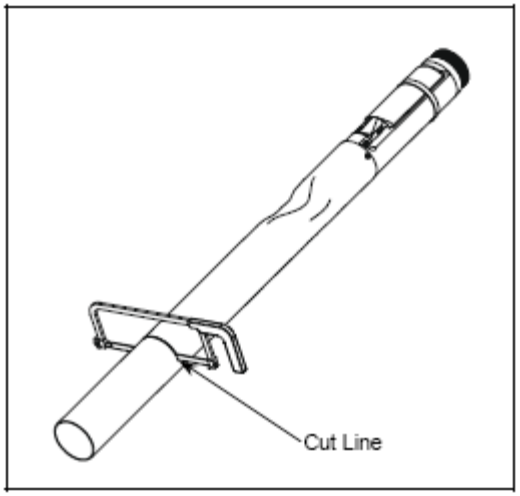

Figure 3

STEP 4: FILE THE UPPER DROP TUBE

File the upper tube square, and remove any burrs or rough edges. Make sure the cut is flat and square.

IMPORTANT: Carefully file a good chamfer on the inside edge of the drop tube to provide a lead-in for the o-ring and inlet tube installed in Step 6.

Figure 4

CAUTION: Failure to properly apply and cure sealant may result in a failure of a pressure decay leak test.

STEP 5: APPLY SEALANT

Prepare sealant by thoroughly mixing 1/3 of each packet together until color is uniform. Generously apply sealant to the inside diameter of the upper drop tube. Make sure coverage is completely around the tube as shown in Fig. 5.

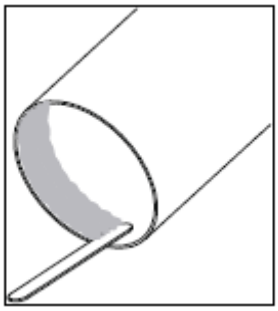

Figure 5

STEP 6: INSTALL INLET TUBE

Install o-ring in the o-ring groove of inlet tube (DO NOT USE GREASE). Insert the inlet tube into the upper tube until it seats against the flange on the upper inlet tube.

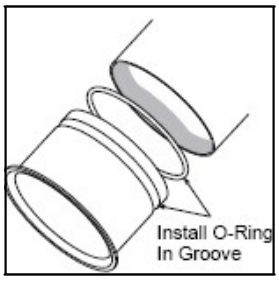

Figure 6

STEP 7: DRILL HOLES

With the inlet tube in place, carefully drill (3) 1/8" diameter pilot holes through the drop tube and inlet tube at three locations at 120 degree intervals around the tube, 1 inch below the flange. Using the pilot holes, drill (3) 5/16" dia. holes through the tubes. Remove the burrs from the drilling operation from the inside of the drop tube assembly with a fine half round file.

IMPORTANT: A 5/16" drill bit must be used. Do not substitute any other size drill bit.

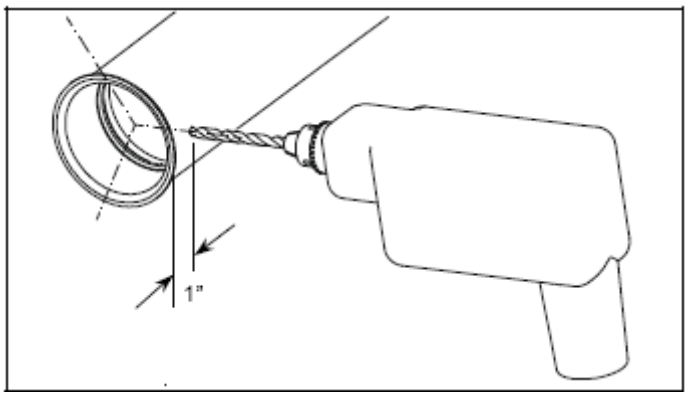

Figure 7

STEP 8: ASSEMBLE AND SEAL CLINCH STUDS

Loosely assemble the three (3) clinch studs, lock washers, and nuts in holes. Do not tighten at this time. Mix up a small amount of sealant. Generously apply sealant underneath each clinch stud head, each nut, and on the outside of the tube around the holes.

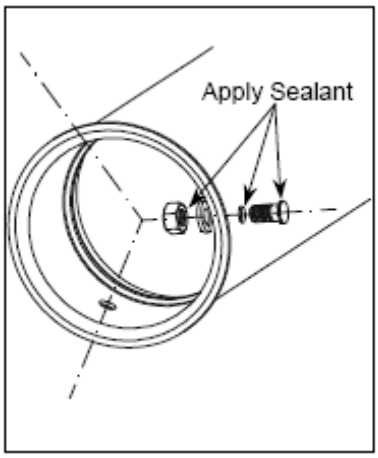

Figure 8

STEP 9: TIGHTEN SELF-CLINCHING STUDS

Tighten clinch studs securely with a ½" wrench. Use only the self-clinching studs that are supplied with the unit. Seating torque is 11.5 ft-lbs min. to 13.5 ft-lbs max. Do not over tighten. Note: Failure to properly apply and cure the sealant may result in a failure of a pressure decay leak test.

STEP 10: LOWER TUBE ASSEMBLY

If a vise is used, clamp on the valve body casting only to avoid damage to the float. Mix the remaining sealant until the color is uniform. Using the mixing stick, **generously apply sealant to the first 6 male threads on the valve body** as shown in figure 10. Make sure coverage is completely around the threads, and work the sealant down into the thread profile. Quickly thread the lower tube onto the valve body. Tighten the tube securely by hand or with a strap wrench. Remove excess sealant and smooth sealant bead with water moistened mixing stick.

IMPORTANT: Allow sealant (epoxy) to cure for 24 hours before installing into tank.

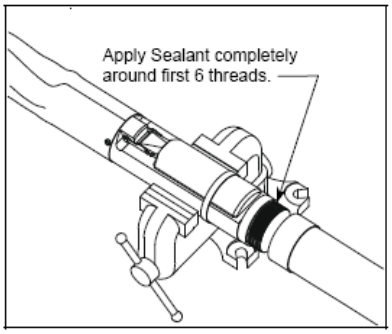

Figure 10

NOTE: Before installing the valve in the tank, a pressure test can be performed on the valve to check for vapor tightness. Seal off both ends of the tube with inflatable plumber's plugs. Apply a maximum 10" W.C. (1/3 PSI) air pressure. If pressure does not hold and a leak can be located with soap solution, do not install the valve. Send the valve back to OPW for warranty evaluation. Caution: Do not over-pressure. Excess pressure can damage the valve.

STEP 11: CUT LOWER TUBE AT 45 ANGLE

Measuring from the underside of the inlet tube flange, mark the overall length of the drop tube a distance of (B) minus 6" or as per local codes or requirements. Determine dimension (B) from the measurements taken in Step 1, Figure 1 (Top of the Face Seal Adaptor below the drain valve outlet in the spill container to the bot- tom of the tank). Saw off the excess tube at a 45- degree angle, and file off any sharp burrs (Refer to Figure 16). Optional: Install the OPW Tank Bottom Protector on the lower tube (Refer to Installation instructions supplied with the Tank Bottom Protector).

STEP 12: PREPARE FILL RISER FOR VALVE INSERTION

IMPORTANT: Inspect the riser pipe for any foreign material. Over spray from tank relining or any internal burrs inside of pipe must be removed prior to installation. Failure to have an unobstructed riser pipe may prevent proper installation or operation of the valve. Thoroughly clean top of riser pipe.

IMPORTANT: Before installing the valve, allow sealant to cure for 24 hours.

STEP 13: REMOVE ELASTIC BAND

Remove the elastic band securing the float to the valve body. The float will move into an outward position.

STEP 14: INSERT DROP TUBE

Make sure the O-Ring gasket is under the flange of the inlet tube. Hold the float down against the valve body and slowly insert the drop tube overfill valve into the riser pipe. Do not force valve into the riser pipe. If any obstruction or foreign matter interferes with smooth insertion of the valve, the riser pipe must be cleared.

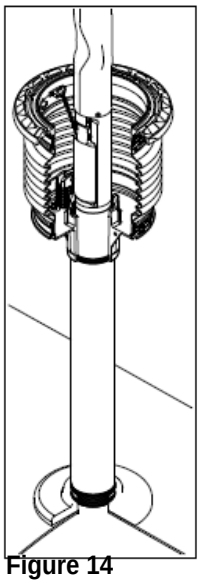

Figure 14

WARNING Failure to follow the assembly and installation instructions or use of excessive force to insert the OPW 61SO will VOID THE WARRANTY!

Difficulty in removing the existing fill tube (if there is one) means there may be an obstruction in the riser pipe. Look for burrs, deformations, excess tank lining material or other projections that may interfere with easy insertion of the OPW 61SO. The 61SO is designed for insertion into schedule 40 pipe. If schedule 80 pipe has been used for the riser, the 61SO cannot be installed. If seamed pipe has been used, the internal weld bead may interfere with the OPW 61SO and prevent installation. If the OPW 61SO won't slip in easily **DON'T FORCE IT!** Damage to the valve may result if excess force is used. Examine the riser pipe carefully; determine the nature of the obstruction; take appropriate steps to remove it.

STEP 15: CHECK INSTALLATION

Insert the drop tube all the way into the tank until the flange and gasket seat onto the top of the Face Seal Adaptor. The float will swing out into the operating position as it passes into the tank. Make sure that the float is aligned along the length of the tank. The length of the tank can easily be determined by locating other manholes or pump boxes that are installed around other tank fittings. Look into the drop tube and align the deflector with the length of the tank.

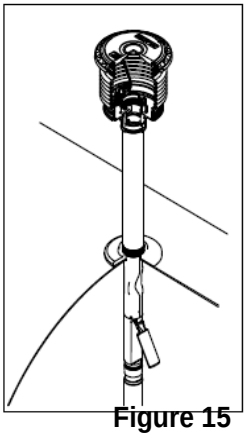

Figure 15

CAUTION: No obstruction in the tank can be within 13" from the center of the riser pipe or the valve may not operate properly.

STEP 16: ALIGN VALVE

Install the OPW Jack Screw Kit and a 4" nipple to lock the valve in place. Refer to the Installation Instructions supplied with the Jack Screw Kit. Install the Rotatable Product Adaptor (Refer to Installation Instructions supplied with the Rotatable Product Adaptor.) Make sure that the valve does not rotate while tightening the adaptor by observing the position of the deflector. The valve must remain aligned along the length of the tank as in Step 15. Repeat this step as necessary to assure proper valve alignment.

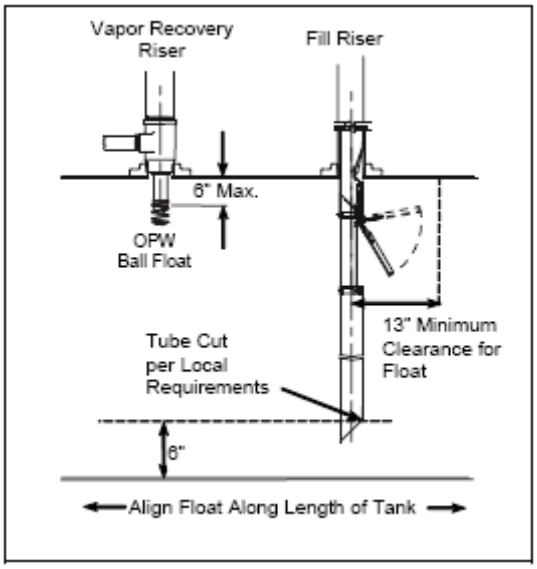

Figure 16

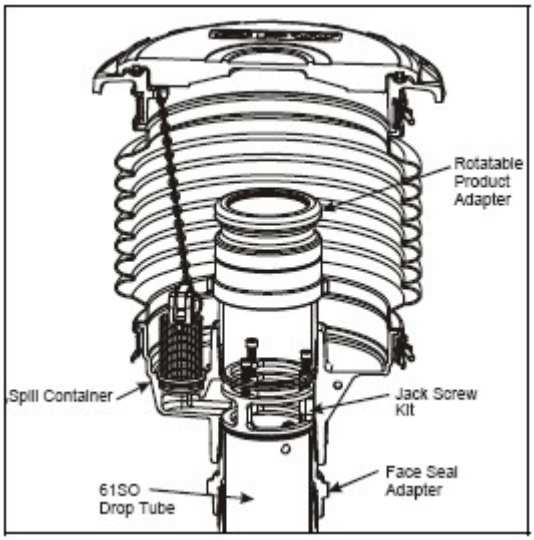

Figure 16A

STEP 17: INSTALL WARNING PLATE

Slide the tie wrap over the warning plate ears and position warning plate against riser pipe approximately 1" below the adaptor. Tighten the tie wrap securely. The valve is now fully installed and in operating position.

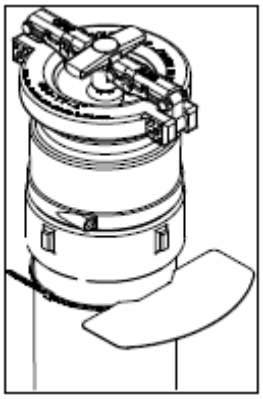

Figure 17

STEP 18: VALVE REMOVAL

The valve can be removed for tank leak testing, inspection, etc., by removing the Rotatable Product Adaptor, the 4" nipple, and the Jack Screw Kit. Reinstall per the above instructions.

STEP 19: ELECTRONIC LIQUID LEVEL MONITORING

If an electronic level monitor is installed, it must be calibrated to match the top of the 61SO valve body, which must correlate with 95% of the actual tank capacity.

PREVENTATIVE MAINTENANCE

Annually, inspect the flapper in the 61SO to see that it is open by looking down the drop tube opening. Test the 61SO drop tube seals with CARB procedure TP-201.1D. If the drop tube seal passes testing, no further maintenance is required. If the drop tube fails testing, replace the drop tube seal with OPW P/N: H11931M for 4" Tubes. Re-test the 61SO drop tube with CARB procedure TP-201.1D. If this does not correct the leak the 61SO needs to be replaced.

CAUTION: Do not insert any foreign object into drop tube if flapper is in the closed position. For example a tank level measuring stick. This will damage the valve and void the Warranty. ALWAYS check flapper location before "sticking" the tank. If flapper is in the closed position the tank is either over filled and you need to wait until the liquid level goes down or the 61SO is damaged and needs to be replaced.

61SO Performance Specifications:

This Overfill Prevention Valve has been manufactured and tested to, and met, the following California specifications. Performance Requirement: Leak rate to be less than or equal to 0.17 CFH @ 2.0" W.C.

Torque Specification:

Self-Clinching Studs, 5/16-8 UN thread, 11.5 ft-lbs minimum to 13.5 ft-lbs maximum.

IMPORTANT: Leave these installation instructions and maintenance procedures with the station operator.

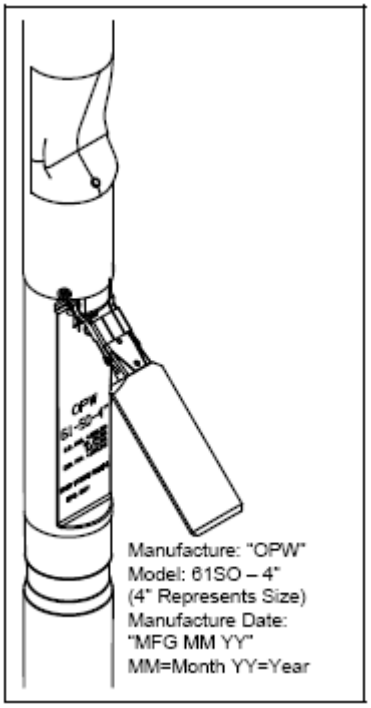

Product Identification

This page intentionally left blank.

3250 US 70 Business West
Smithfield, NC 27577
Customer Service:1-(800) 422-2525
Technical Service and Questions:
1-(877) OPW-TECH
www.opwglobal.com

71SO Overfill Prevention Valves and Installation and Maintenance Instructions

IMPORTANT INFORMATION FOLLOW ALL INSTRUCTIONS

Please read these warnings and use and assembly instructions completely and carefully before starting. Failure to do so may cause product failure, or result in environmental contamination due to liquid leakage into the soil, creating hazardous spill conditions.

Notice: Flex- Works by OPW, Inc., VAPORSAVER™ and all other OPW products must be used in compliance with all applicable federal, state, provincial and local laws, rules and regulations. Product selection is the sole responsibility of the customer and/or its agents and must be based on physical specifications and limitations, compatibility with the environment and material to be handled. All illustrations and specifications in this literature are based on the latest production information available at the time of publication. Prices, materials and specifications are subject to change at any time, and models may be discontinued at any time, in either case, without notice or obligation.

This section intentionally left blank.

This section intentionally left blank.

Date of manufacture on this product is located on the flat area of the valve body, under float.

GENERAL INSTRUCTIONS

The OPW 71SO Overfill Prevention Valve is designed for tight fill, gravity drop applications to help prevent accidental or intentional overfilling of underground storage tanks. It is installed in the UST drop tube in place of a standard drop tube.

The main 71SO valve closes when liquid reaches the initial shut off point. A small bypass valve remains open to allow the delivery hose to drain at 3-5 gallons per minute. If the delivery truck valve is not closed after initial shut-off, the bypass valve will close and will restrict all fuel delivery to ensure that the top of the tank is not wetted per EPA requirements.

The 71SO models of the 71SO are designed to be installed with the following OPW products: Face Seal Adaptor, OPW Spill Container or Multi-port, Jack Screw Kit, Rotatable Product Adaptor, and Product Cap.

IMPORTANT

Read these assembly and installation instructions completely and carefully prior to starting. Check to make sure all parts have been provided. Use only the parts supplied; substitution of parts may cause product failure.

Failure to follow instructions may cause improper product operation or premature failure which may permit storage tank overfill. An overfilled storage tank may create hazardous conditions and/or environmental contamination.

CAUTION

Do not remove elastic band from around float until instructed to do so, as damage to valve may result.

WARNING

Failure to properly connect delivery hose and el- bow, and/or disconnecting a liquid filled delivery hose or elbow will result in a hazardous spill, which may result in personal injury, property damage, fire, explosion, and water and soil pollution.

- Make sure all connections, including the hose and elbow connections, between storage tank and transport are securely coupled.
- Make sure the lip seal and/or all gaskets in the delivery elbow are properly in place to prevent spills.
- Do not operate with damaged or missing parts, which prevent tight connections.

Normal Operation: A Hose ”Kick” and reduced flow signal that the tank is full. Close transport delivery

valve and drain hose into tank before disconnecting any hose fitting.

Overfilled Tank: Failure of the hose to drain after closing the delivery valve signals an overfilled tank. Do Not Disconnect any delivery hose fitting until the liquid level in the tank has been lowered to allow the hose to drain into the tank.

WARNING

In the event you are splashed with fuel remove wet clothing immediately. Skin contact with gasoline can cause chemical burns and may result in inhalation of vapors that may be fatal. Never go inside confined areas after being splashed and never go near ignition sources.

IMPORTANT

Determine if the underground storage tank is equipped with a ball float vent valve, as illustrated in Figure 24. In all systems, the shut-off point of the 71SO must be reached before the ball float reduces flow to ensure proper overfill valve operation.

TOOLS NEEDED FOR INSTALLATION AND ASSEMBLY:

1. 71SO-TOOL or 71SO-TOOLC or 71SO-TOOLCT (includes the following)
   - Sharp 3/16" drill bit with stop
   - Punch
2. Drill
3. Hammer
4. Tape measure
5. Hacksaw or cut-off saw, fine tooth; 24 teeth/inch
6. Fine half round file
7. Screwdriver - Phillips blade
8. Fine grit sandpaper / steel wool
9. Grease, black moly
10. Torque Wrench
11. Band clamp (3-3/4" diameter minimum)

WARNING

Using electrically operated equipment near gasoline or gasoline vapors may result in fire or explosion, causing personal injury and property damage. Check to assure the working area is free from such hazards, and always use proper precautions.

IMPORTANT: The figures in this installation and maintenance instruction may contain vapor recovery equipment (including model numbers) that is not certified by the California Air Resources Board (CARB) for a specific Phase I Vapor Recovery System. Please refer to Exhibit 1 of the appropriate CARB Phase I Executive Order for a list of certified Phase I Vapor Recovery System Equipment.

71SO Parts Diagram

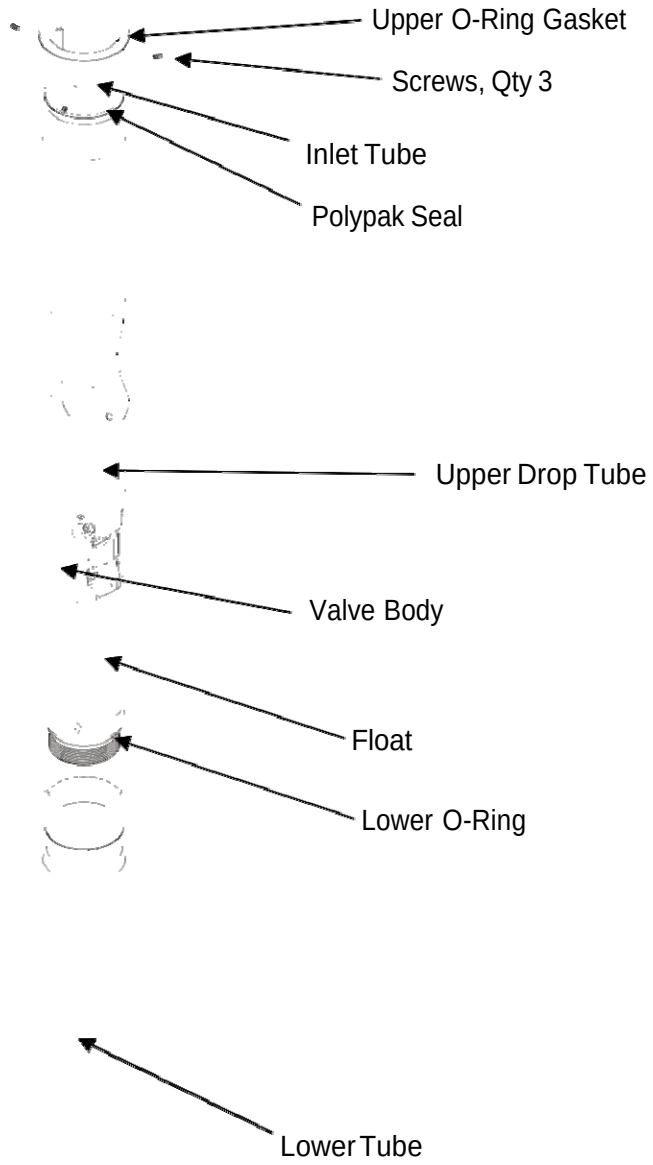

HOW TO LOCATE THE POSITION OF THE 71SO AT 95% TANK CAPACITY
(Shut-off points can be adjusted to any capacity to comply with AHJ Requirements)

The length of the upper tube and the placement of the 71SO valve body determine the shut-off point. Following the standard instructions for the OPW 71SO will provide for initial shutoff at 95%. In all cases, the upper tube length must be a minimum of 6-1/2" plus the length of the riser pipe. All length measurements are in inches.

This section intentionally left blank.

INSTRUCTIONS

1) Find tank capacity (in gallons) from tank calibration chart provided by tank manufacturer.
2) Calculate 95% of capacity
3) Locate the 95% volume number on the tank calibration chart.
4) Find the dipstick number (X) which corresponds to the 95% tank volume. And, find the dipstick number (Y) which corresponds to the 100% volume.
5) Subtract the dipstick number (X) from the tank diameter (Y) to find the upper tube reference number (Z).

   (Y) - (X) = (Z)

6) Subtract 2" from (Z) to find the upper tube depth (C).

   (Z) - 2" = C

7) Is C less than 6-1/2"?

NO Upper tube length is C plus the distance from the top of the Face Seal Adaptor installed on the riser pipe to the inside, top lip of the storage tank (A).
Upper Tube Length = C + (A)

YES Upper tube length is 6-1/2" plus the riser pipe measurement (A).

Upper Tube Length = 6-1/2" + (A)

NOTE: You must find the actual tank capacity number that correlates to the 6-1/2" + (A) depth for the station records. This number may also be used for the purposes of calibrating an electronic tank level system.

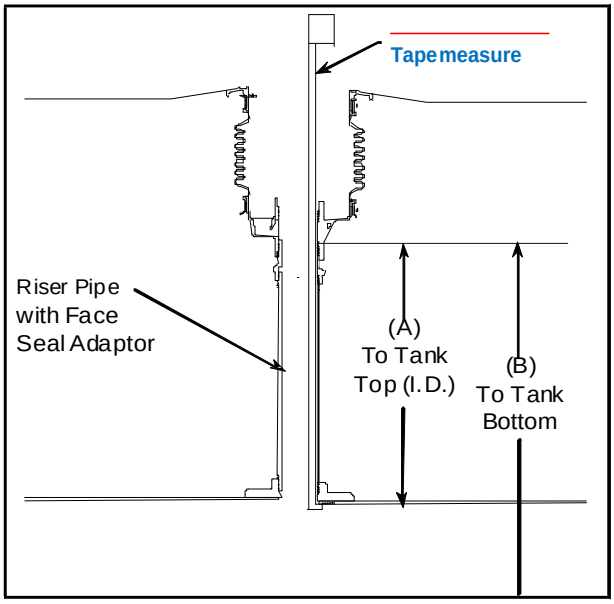

Figure 1

EXAMPLE

1) For an Owens-Corning Model G-3 Fiberglass® Tank Calibration Chart:
   Tank Capacity - 10,000 gal., nominal 9,403 gal.
   NOTE: Use actual capacity only
2) 95% of actual tank capacity = 0.95 x 9403 gal. = 8933 gal.
3) The closest number which is less than 8933 gal. Is 8910 gal. Choosing the closest number less than 95% of actual capacity ensures that the initial shutoff will occur when the tank is no more than 95% full.
4) The calibration chart reading of 8910 gal. corresponds to a dipstick measurement of 82".
5) Dipstick number (X) = 82"
   Tank diameter (Y) = 92"
   (Y) - (X) = (Z) (92" - 2" = 10")
   (Z) = 10"
6) (Z) - 2" = C (10" - 2" = 8")
   C=8"
7) Is 8" less than 6-1/2"?

NO Measure the distance from the top of the FSA-400 Face Seal Adaptor installed on the riser pipe to the inside, top lip of the storage tank and obtain measurement (A).

Upper tube length = C + (A)

ASSEMBLY INSTRUCTIONS

IMPORTANT: Each of the numbered steps in the installation instructions are designed as a CHECK LIST to ensure proper installation and trouble free operation of the OPW 71SO Overfill Prevention Valve.

Read and follow these steps carefully, checking them off as you proceed.

Figure numbers correspond to step numbers for easy reference.

STEP 1: MEASURE

Install the OPW Face Seal Adaptor and the OPW Thread-on Spill Container on the Fill Riser (Refer to the Installation Instructions Supplied with the Spill Container). Insert a tape measure through the riser pipe and hook it under the inside of the tank in the lengthwise direction. Measure the distance from the top of the Face Seal Adaptor threads inside the base of the spill container bucket just below the drain valve outlet window to the inside, top lip of the storage tank (Dim. "A") **(See Figure 1 &1A).**

The top flange on the 71SO will rest on the Face Seal Adaptor just below the drain valve outlet, and be locked in place between the Face Seal Adaptor and the 4" nipple that is installed in the spill container with the Jack Screw Kit **(See Figure 1A).** (For riser pipe configurations other than that shown, consult installation drawings or use other necessary means to measure Dimension "A").

Using a tape measure, measure the distance from the top of the Face Seal Adaptor in the spill container to the bottom of the tank **(**Dim. "B").

I**MPORTANT:** Inspect the riser pipe for any foreign material. Over spray from tank relining or any internal burrs inside of pipe must be removed prior to installation. Failure to have an unobstructed riser pipe may prevent proper installation and operation of the valve. The 71SO is designed for installation into schedule 40 riser pipes. The 71SO cannot be installed into schedule 80 riser pipes.

STEP 2: MARK THE TUBE

Use the result from Step 1 and ***HOW TO LOCATE THE POSITION OF THE 71SO AT 95% TANK CAPACITY*** to mark the upper tube. Measure the distance from the seam where the upper tube and valve body meet. Use a tape measure to mark the calculated upper tube length onto the upper tube. **See Figure 2.**

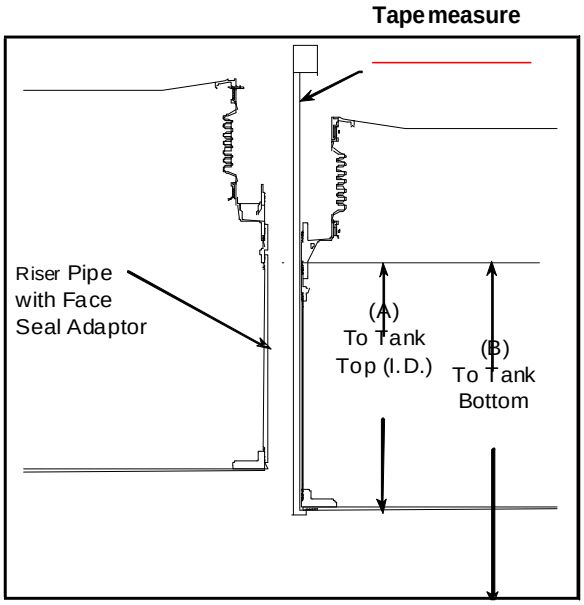

Figure 1

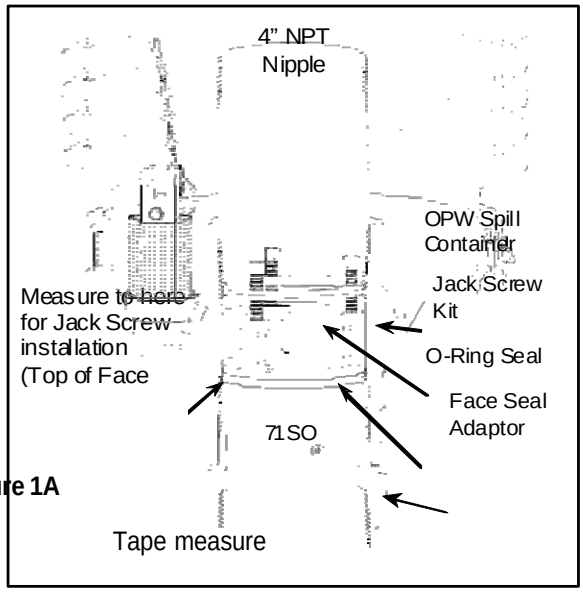

Figure 1A

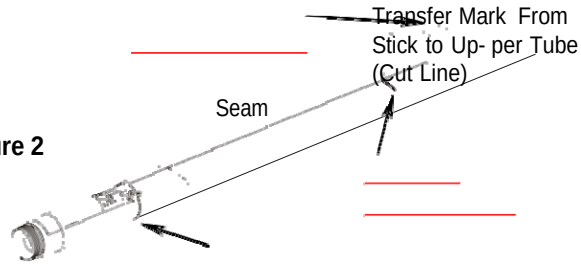

Figure 2

STEP 3: CUT THE UPPER DROP TUBE

Attach the supplied band clamp to the upper tube just below the mark and ensure that it is assembled square to the tube. The clamp can be used as a guide for making a square cut. If a vise is used, clamp on the valve body casting only to avoid damage to the float and tubes **(See Figure 3A).** Carefully saw through the tube squarely, at the mark made in Step 2. Use a hacksaw with a new fine-tooth blade. Rotating the upper tube as the sawing progresses will minimize run out and ensure a square 90-degree cut. Remove the band clamp after tube is cut.

<u>CAUTION</u> - DO NOT use a pipe or tubing cutter to cut the upper drop tube, this may damage the tube, causing it to be out of round thereby prohibiting assembly of the unit.

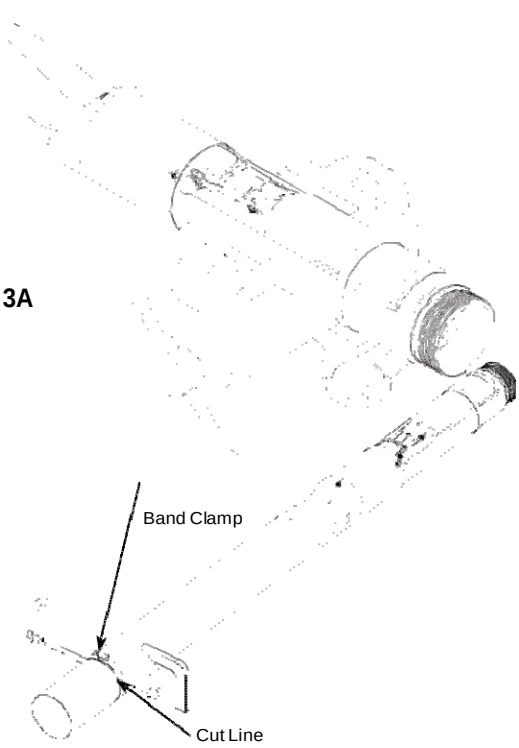

Figure 3A

Figure 3B

MPORTANT: Remove all chips and shavings generated in steps 3 thru 5 out of the cut end of the tube. DO NOT remove chips and shavings by dumping thru valve body.

STEP 4: FILE THE UPPER DROP TUBE

File the upper tube square, and remove any burrs or rough edges. Make sure the cut is flat and square.

IMPORTANT: Carefully file a good chamfer on the inside edge of the drop tube to provide a lead-in for the polypak seal and inlet tube installed in Step 8.

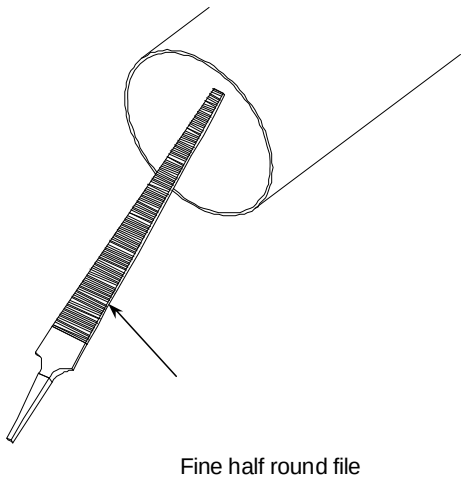

Figure 4

STEP 5: SAND THE UPPER DROP TUBE

Sand the inside of the drop tube with sandpaper and/or steel wool to remove all burrs and sharp edges. After sanding wipe down the inside of the tube with a clean rag from the top to approximately 4 inches down to remove any debris.

<u>Caution:</u> Failure to properly chamfer, sand, and clean the drop tube may cut the seal and result in a failure of a pressure decay leak test.

Figure 5

STEP 6: APPLY GREASE TO DROP TUBE

Apply black moly grease to the inside diameter of the upper drop tube. Make sure coverage is completely around the tube as shown in **Figure 6.**

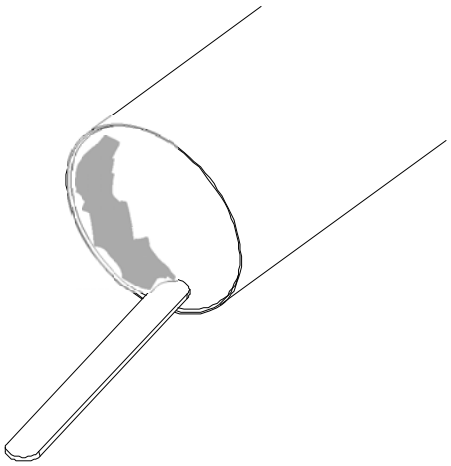

Figure 6

STEP 7: APPLY GREASE TO POLYPAK SEAL

Ensure that the polypak seal is installed on the inlet tube with the lip up as shown in ***Figure 7***. Apply black moly grease to the polypak as shown. Make sure coverage is completely around the polypak seal.

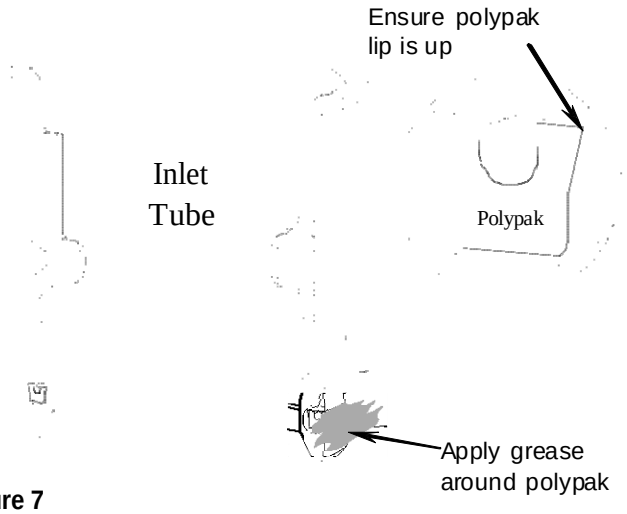

Figure 7

STEP 8: INSTALL INLET TUBE

Insert the inlet tube into the upper tube until the upper tube seats against the flange on the inlet tube. Ensure polypak is inserted evenly and stays in inlet tube groove.

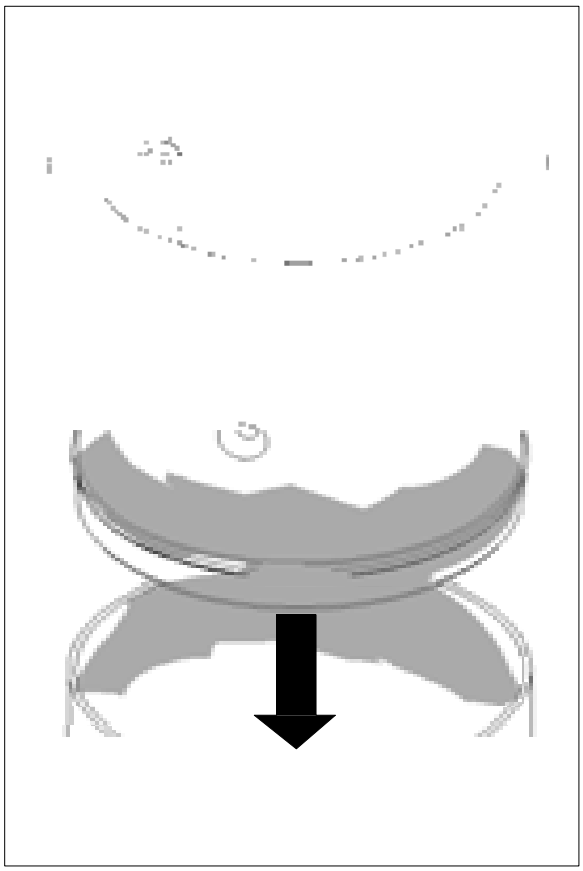

Figure 8

SEE PAGE 8 FOR INSTRUCTIONS USING THE 71S0-TOOL.

SEE PAGE 9 FOR INSTRUCTIONS USING THE 71S0-TOOLC.

SEE PAGE 10 FOR INSTRUCTIONS USING THE 71S0-TOOLCT.

71SO-TOOL PROCEDURE BELOW,
FOR 71SO-TOOLC, SEE PAGE 9
FOR 71SO-TOOLCT, SEE PAGE 10

Add 2" wide slot to use with testable valves

STEP 9A: INSERT 71SO-TOOL OVER INLET TUBE
To install the 71SO-TOOL (sold separately) over the inlet tube, first loosen all three knobs, so the tool can pass freely over the inlet tube flange. Align the slot on the tool with the key on the inlet tube and insert the tool down. **See Figure 9A.**

Figure 9A

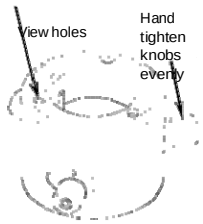

Figure 10A

STEP 10A: TIGHTEN THE 71SO-TOOL
Use the three view holes to ensure that the tool seats out flat against the top of the inlet tube. To prevent vertical movement of the tool during drilling, hand tighten all three knobs evenly to the upper drop tube. **See Figure 10A.**

STEP 11A: PREPARE DRILL AND BIT
Confirm that the stop on the 3/16" drill bit supplied with the 71SO-TOOL is in the correct position before drilling. The stop is factory installed at a distance be- tween 2" to 2-1/16" from the tip with the 71SO-TOOL. If the stop is not at the correct position it must be fixed before drilling.

CAUTION: If the drill stop is not in the proper loca- tion failure of a pressure decay leak test may result.

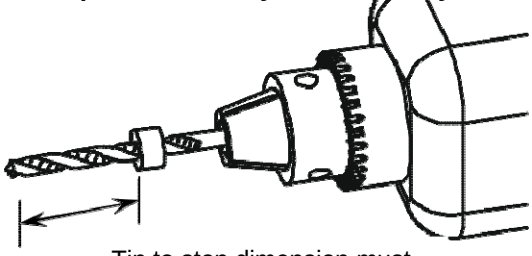

Figure 11A

STEP 12A: DRILL HOLES
With the inlet tube and 71SO-TOOL in place, carefully drill a 3/16" diameter hole in the upper tube using the drill bushing in the knob as a guide. The drill stop is po- sitioned so it will bottom out against the knob after the bit has drilled through the upper drop tube. If the stop is positioned wrong either no hole will be drilled, or a through hole could potentially be drilled through the inlet tube. If no hole is drilled return to step 11A and check the stop dimension. If a hole is drilled through the inlet tube or into the screw hole the assembly is not salvageable. Drill (2) more holes in the two remaining knobs.

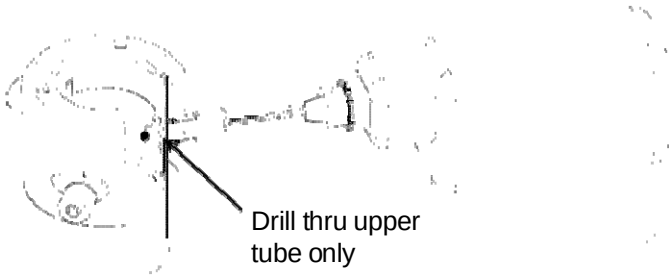

Figure 12A

71SO-TOOLC PROCEDURE BELOW,
FOR 71SO-TOOL, SEE PAGE 8
FOR 71SO-TOOLCT, SEE PAGE 10

This section intentionally left blank.

STEP 9B:

INSERT 71SO-TOOLC OVER INLET TUBE

To install the 71SO-TOOLC (sold separately) over the inlet tube, first loosen the thumb screw, so the tool can pass freely over the inlet tube flange. Align the slot on the tool with the key on the inlet tube and insert the tool down. **See Figure 9B**.

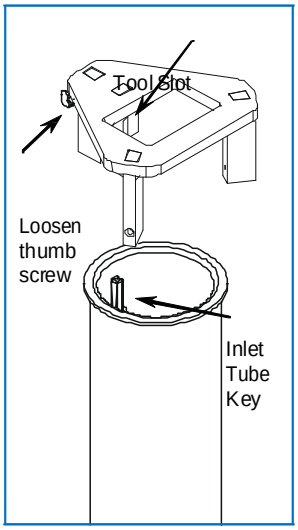

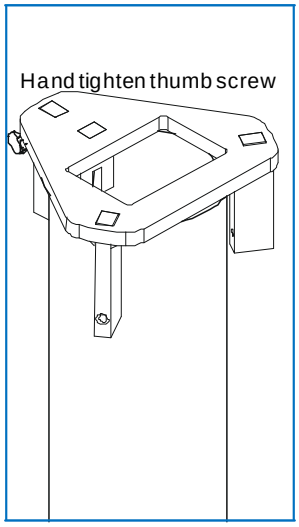

STEP 10B: TIGHTEN THE 71SO-TOOLC

Ensure that the tool seats flat against the top of the inlet tube. To prevent vertical movement of the tool during drilling, hand tighten the thumb screw against the upper drop tube. **See Figure 10B**.

STEP 11B: PREPARE DRILL AND BIT

Confirm that the stop on the 3/16" drill bit supplied with the 71SO-TOOLC is in the correct position before drilling. The stop is factory installed at a distance be- tween 1-3/16" to 1-1/4" from the tip with the 71SO-TOOLC. If the stop is not at the correct position it must be fixed before drilling.

CAUTION: **If the drill stop is not in the proper loca- tion failure of a pressure decay leak test may result.**

71SO-TOOLC

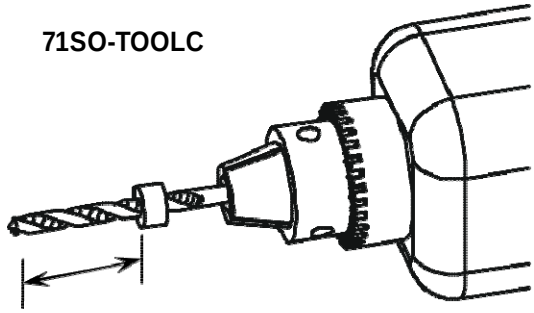

STEP 12B: DRILL HOLES

With the inlet tube and 71SO-TOOLC in place, carefully drill a 3/16" diameter hole in the upper tube using the hole in the 71SO-TOOLC as a guide. The drill stop is positioned so it will bottom out against the tool after the bit has drilled through the up- per drop tube. If the stop is positioned wrong either no hole will be drilled, or a through hole could potentially be drilled through the inlet tube. If no hole is drilled return to step 11B and check the stop dimension.

If a hole is drilled through the inlet tube or into the screw hole the assembly is not salvageable. Drill (2) more holes in the two remaining guide holes.

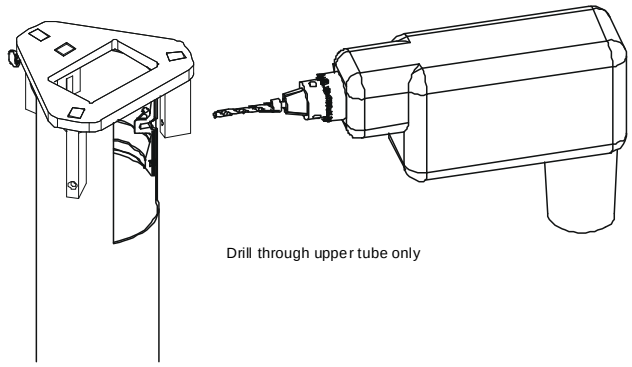

Figure 12B

71SO-TOOLCT PROCEDURE BELOW,
FOR 71SO-TOOL, SEE PAGE 8
FOR 71SO-TOOLC, SEE PAGE 9

STEP 9C: INSERT 71SO-TOOLCT OVER INLET TUBE
To install the 71SO-TOOLCT (sold separately) over the inlet tube, first loosen the thumb screws, so the tool can pass freely over the inlet tube flange. Align the slot on the tool with the key on the inlet tube and insert the tool down. **See Figure 9C** .

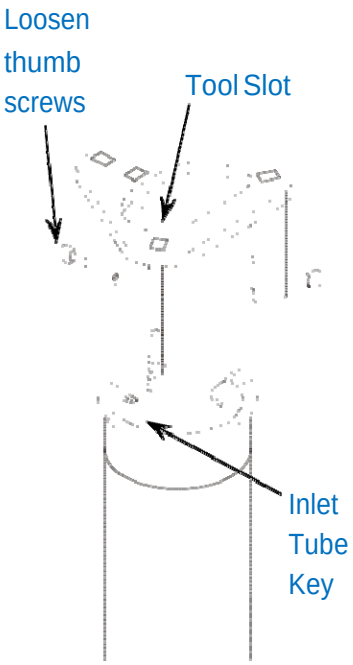

Figure 9C

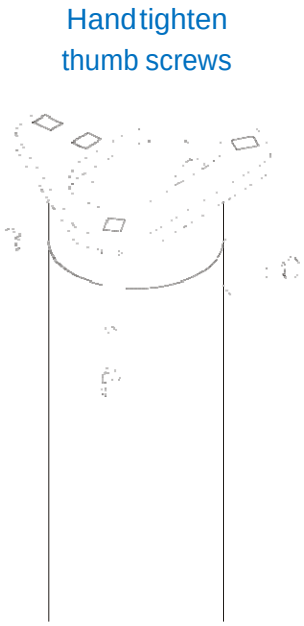

Figure 10C

STEP 10C: TIGHTEN THE 71SO-TOOLCT
Ensure that the tool seats flat against the top of the inlet tube. To prevent vertical movement of the tool during drilling, hand tighten the thumb screws against the upper drop tube. See Figure 10C.

STEP 11C: PREPARE DRILL AND BIT
Confirm that the stop on the 3/16" drill bit supplied with the 71SO-TOOLCT is in the correct position before drilling. The stop is factory installed at a distance between 1-3/16" to 1-1/4" from the tip with the 71SO-TOOLCT. If the stop is not at the correct position it must be fixed before drilling.

CAUTION: If the drill stop is not in the proper location failure of a pressure decay leak test may result.

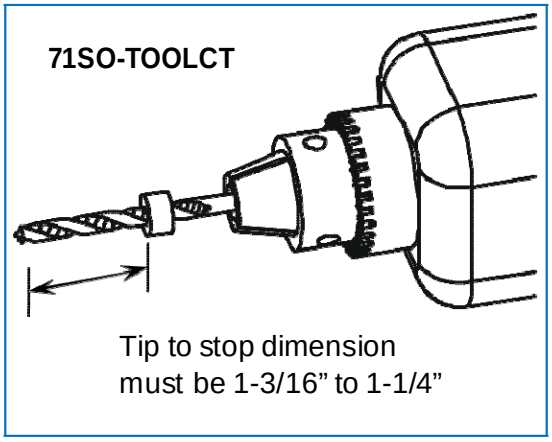

Figure 11C

STEP 12C: DRILL HOLES
With the inlet tube and 71SO-TOOLCT in place, carefully drill a 3/16" diameter hole in the upper tube using the hole in the 71SO-TOOLCT as a guide. The drill stop is positioned so it will bottom out against the tool after the bit has drilled through the upper drop tube. If the stop is positioned wrong either no hole will be drilled, or a through hole could potentially be drilled through the inlet tube. If no hole is drilled return to step 11C and check the stop dimension. If a hole is drilled through the inlet tube or into the screw hole the assembly is not salvageable. Drill (2) more holes in the two remaining guide holes.

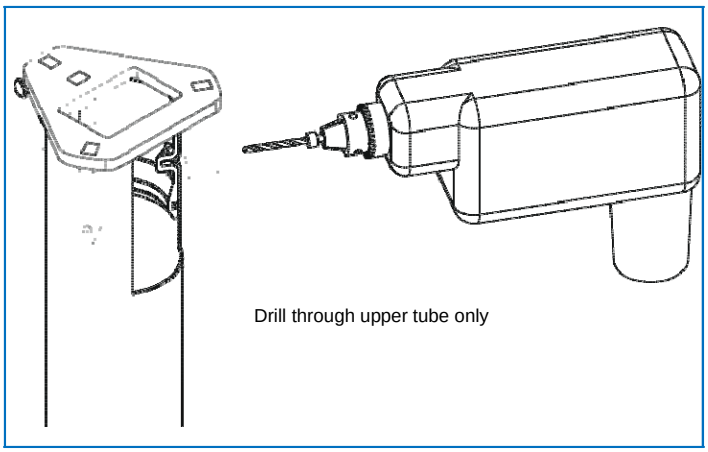

Figure 12C

STEP 13: DIMPLE FIRST HOLE

Remove tool. Remove any chips or burrs from the drilling operation. Place the assembly on a solid surface. Using the punch supplied with the 71SO-TOOL, 71SO-TOOLC, and 71SO-TOOLCT, align the tip of the punch with the drilled hole and dimple the upper drop tube by striking the punch with a hammer until the drop tube is formed into countersunk hole in the inlet tube. After punching, remove any chips that may have fallen into the inlet tube screw hole.

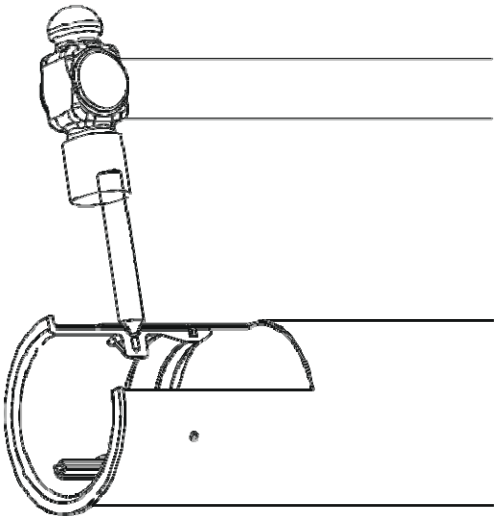

Figure 13

STEP 14: ASSEMBLE FIRST SCREW

Ensure that the drop tube was formed into the countersunk screw hole as shown in Figure 14 if not return to Step 13. Apply black moly grease to screw and tighten first screw into inlet tube with a screwdriver. Use only the taptite screws that are supplied with the unit. Seating torque is 20 in-lbs min. to 35 in-lbs max. Screw head should be flush with the drop tube. Do not over tighten.

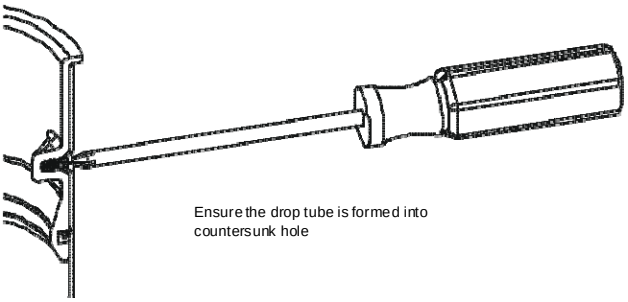

Figure 14

STEP 15: DIMPLE REMAINING HOLES

Remove any chips or burrs from the drilling operation. Dimple the next (2) holes as done in Step 13. Make sure the assembly is on a solid surface when punching. After punching, remove any chips that may have fallen into the inlet tube screw hole.

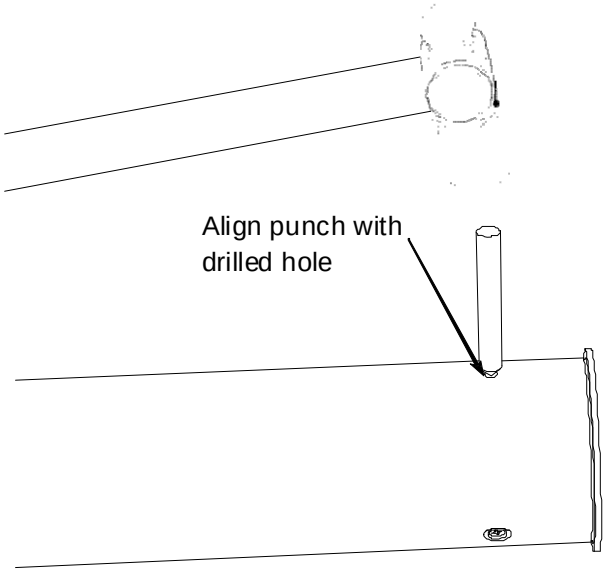

Figure 15

STEP 16: ASSEMBLE OTHER SCREWS

Apply black moly grease to screws and tighten the other (2) screws into inlet tube with a screwdriver as done in Step 14. Use only the taptite screws that are supplied with the unit. Seating torque is 20 in-lbs min. to 35 in-lbs max. Do not over tighten.

STEP 17: APPLY GREASE TO LOWER O-RING AND BODY THREADS

Apply black moly grease to the lower tube o-ring and body threads as shown. Make sure coverage is completely around the o-ring. Install o-ring in groove just above threads.

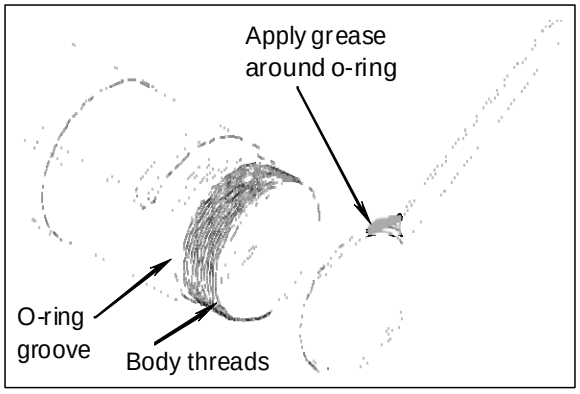

Figure 17

STEP 18: LOWER TUBE ASSEMBLY

If a vise is used, clamp on the valve body casting only to avoid damage to the float and tubes. Thread the lower tube onto the valve body until the lower tube bottoms out on valve body. Tube can be tightened by hand or with a strap wrench. If a strap wrench is used try to position it on the threaded insert portion of the lower tube to prevent damaging the tube.

Figure 18

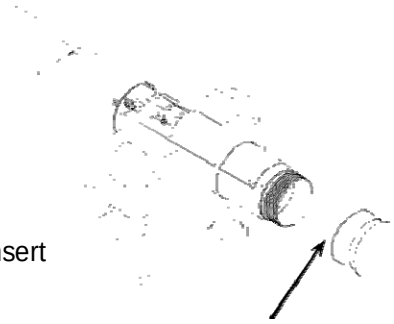

Threaded insert

NOTE: Before installing the valve in the tank, a pres- sure test can be performed on the valve to check for vapor tightness. Seal off both ends of the tube with inflatable plumber's plugs. Apply a maximum 10" W.C. (1/3 PSI) air pressure. If pressure does not hold and a leak can be located with soap solution, do not install the valve. Send the valve back to OPW for warranty evaluation.

CAUTION: Do not over-pressurize. Excess pressure can damage the valve.

STEP 19: CUT LOWER TUBE

Measuring from the underside of the inlet tube flange, mark the overall length of the drop tube a distance of (B) minus 6". Determine dimension (B) from the measurements taken in Step 1, Figure 1 (Top of the Face Seal Adapter below the drain valve outlet in the spill container to the bottom of the tank). Saw off the excess tube at a 45-degree angle or per local codes or requirements and file off any sharp burrs (Refer to Figure 24).
Optional: Install the OPW Tank Bottom Protector on the lower tube (Refer to Installation instructions sup- plied with the Tank Bottom Protector).

IMPORTANT: Remove all chips and shavings out of the cut end of the tube. DO NOT remove chips and shavings by dumping thru valve body.

FOR STANDARD VAPOR TIGHT MODELS, PROCEED TO STEP 20 ON PAGE 14.

This section intentionally left blank.

S

This section intentionally left blank.

STEP 20: PREPARE FILL RISER FOR VALVE INSERTION

IMPORTANT: Inspect the riser pipe for any foreign material. Over spray from tank relining or any internal burrs inside of pipe must be removed prior to installation. Failure to have an unobstructed riser pipe may prevent proper installation or operation of the valve. Thoroughly clean top of riser pipe.

STEP 21: REMOVE ELASTIC BAND
Remove the elastic band securing the float to the valve body. The float will move into an outward position.

STEP 22: INSERT DROP TUBE
Make sure the upper O-Ring gasket is under the flange of the inlet tube. Hold the float down against the valve body and slowly insert the drop tube overfill valve into the riser pipe. Do not force valve into the riser pipe. If any obstruction or foreign matter interferes with smooth insertion of the valve, the riser pipe must be cleared.

WARNING

Failure to follow the assembly and installation instructions or use of excessive force to insert the OPW 71SO will VOID THE WARRANTY.

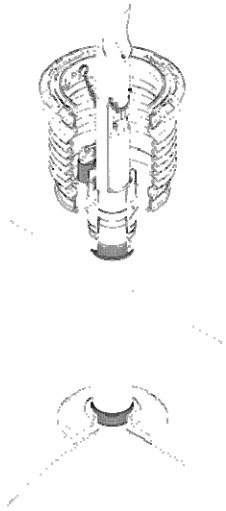

Figure 22

Difficulty in removing the existing fill tube (if there is one) means there may be an obstruction in the riser pipe. Look for burrs, deformations, excess tank lining material or other projections that may interfere with easy insertion of the OPW 71SO. The 71SO is designed for insertion into schedule 40 pipe. If schedule 80 pipe has been used for the riser, the 71SO cannot be installed. If seamed pipe has been used, the internal weld bead may interfere with the OPW 71SO and prevent installation. If the OPW 71SO won't slip in easily DON'T FORCE IT! Damage to the valve may result if excess force is used. Examine the riser pipe carefully; determine the nature of the obstruction; take appropriate steps to remove it.

STEP 23: CHECK INSTALLATION
Insert the drop tube all the way into the tank until the flange and gasket seat onto the top of the Face Seal Adaptor. The float will swing out into the operating position as it passes into the tank.

Figure 23

Make sure that the float is aligned along the length of the tank. The length of the tank can easily be determined by locating other manholes or pump boxes that are installed around other tank fittings. Look into the drop tube and align the deflector with the length of the tank.

CAUTION: No obstruction in the tank can be within 14" from the center of the riser pipe or the valve may not operate properly (See Figure 24).

STEP 24: ALIGN VALVE

Install the OPW Jack Screw Kit and a 4" NPT nipple to lock the valve in place. Refer to the Installation Instructions supplied with the Jack Screw Kit.. Install the Rotatable Product Adaptor (Refer to Installation Instructions supplied with the Product Adaptor.) Make sure that the valve does not rotate while tightening the adaptor by observing the position of the deflector. **The valve must remain aligned along the length of the tank as in Step 23**. Repeat this step as necessary to assure proper valve alignment.

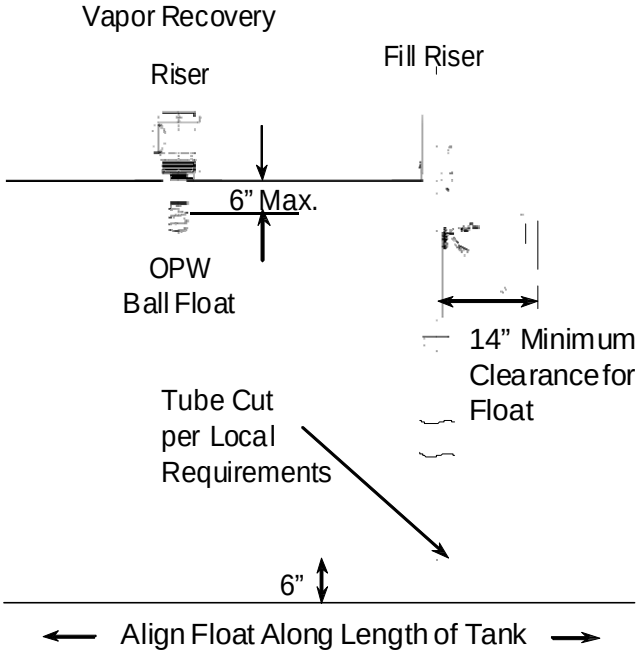

Figure 24

This section intentionally left blank.

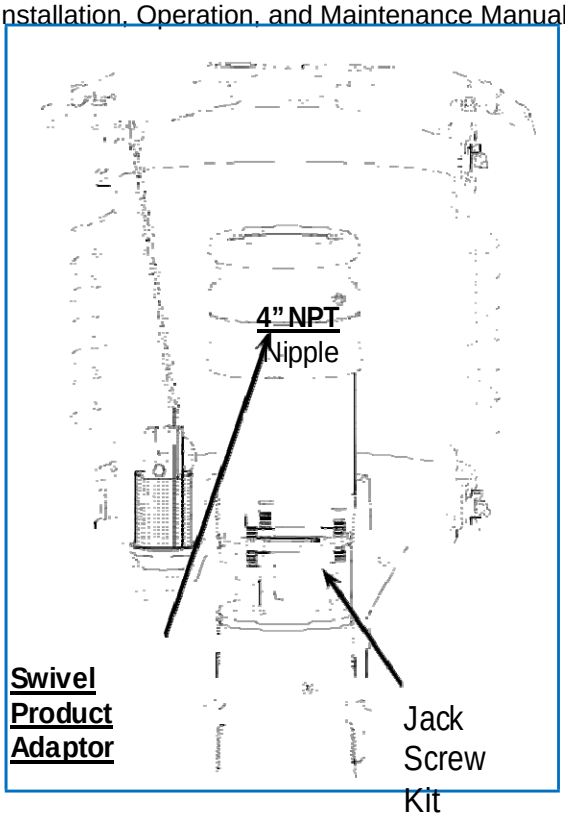

STEP 25: INSTALL WARNING PLATE
Bend the three warning plate ears down then slide the tie wrap over the warning plate ears and position warning plate against riser pipe approximately 1" below the adaptor. Tighten the tie wrap securely. The valve is now fully installed and in operating position.

NOTE: the warning plate includes important warnings, operating parameters, and listing information and must be installed.

Figure 25

STEP 26: VALVE REMOVAL
The valve can be removed for tank leak testing, inspection, etc., by removing the Rotatable Product Adaptor, the 4" nipple, and the Jack Screw Kit. Reinstall per the above instructions.

STEP 27: ELECTRONIC LIQUID LEVEL MONITORING
If an electronic level monitor is installed, it must be calibrated to match the top of the 71SO valve body, which must correlate with 95% of the actual tank capacity.

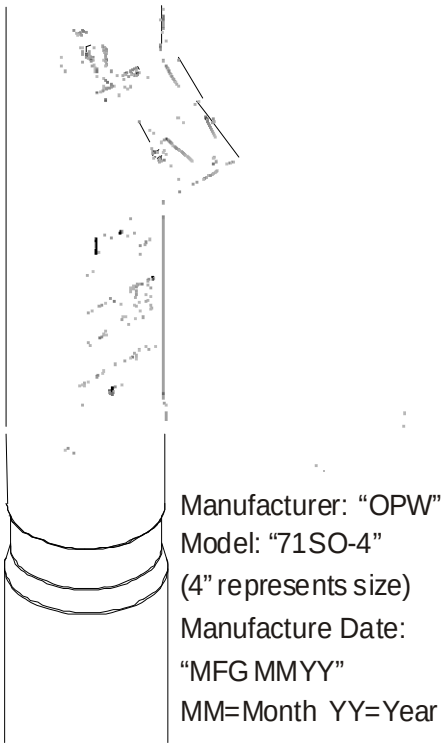

Figure 26 - Product Identification

CAUTION: Do not insert any foreign object into drop tube if flapper is in the closed position. For exam- ple, a tank level measuring stick. This will damage the valve and void the Warranty. ALWAYS check flapper location before "sticking" the tank. If flap- per is in the closed position, the tank is either over- filled and you need to wait until the liquid level goes down or the 71SO is damaged and needs to be re- placed.

71SO Performance Specifications

This Overfill Prevention Valve has been manufactured and tested to, and met, the following California specifications. Performance Requirement: Leak rate to be less than or equal to 0.17 CFH@2.0"W.C.

Torque Specification

Taptite Screws, #10-24 thread cutting, 20 in-lbs minimum to 35 in-lbs maximum.

IMPORTANT: Leave these installation instructions and maintenance procedures with the station operator.

This section intentionally left blank.

This page intentionally left blank.

3250 US 70 Business West
Smithfield, NC 27577
Customer Service:1-(800) 422-2525
Technical Service and Questions:
1-(877) OPW-TECH
www.opwglobal.com

Installation and Maintenance Instructions
OPW Multi-Port Spill Containment Manholes

Please read these warnings and assembly instructions completely and carefully before starting. Failure to do so may cause product failure, or result in environmental contamination due to liquid leakage into the soil, creating hazardous spill conditions.

IMPORTANT: The OPW Spill Container is pre-assembled for your convenience and ease of installation. Check to make sure the unit is intact and undamaged and all parts have been supplied. Never substitute parts for those supplied. Doing so may cause product failure.

WARNING-DANGER: Using electrically operated equipment near gasoline or gasoline vapors may result in a fire or explosion, causing personal injury and property damage. Be sure that the working area is free from such hazards, and always use proper precautions.

NOTE: At all times when product is in the storage tank keep the riser pipe capped, so the vapors cannot escape into the environment.

Notice: OPW products must be used in compliance with applicable federal, state, and local laws and regulations. Product selection should be based on physical specifications and limitations and compatibility with the environment and material to be handled. All illustrations and specifications in this literature are based on the latest production information available at the time of publication. Prices, materials, and specification are subject to change at any time, and models may be discontinued at any time, in either case, with- out notice or obligation.

Notice: Flex- Works by OPW, Inc., VAPORSAVER™ and all other OPW products must be used in compliance with all applicable federal, state, provincial and local laws, rules and regulations. Product selection is the sole responsibility of the customer and/or its agents and must be based on physical specifications and limitations, compatibility with the environment and material to be handled. All illustrations and specifications in this literature are based on the latest production information available at the time of publication. Prices, materials and specifications are subject to change at any time, and models may be discontinued at any time, in either case, without notice or obligation.

This section intentionally left blank.

-
.This section Intentionally left blank.
-

Date of manufacture on this product is located on the ID Tag on the mounting ring of the bucket.

In California it is prohibited to use spill container drain valves on spill containers that are exclusively used for vapor return risers. Install only -2100 Series Thread-On spill container models equipped with drain plug P/N 1DP-2100.

Multi-Port Performance Specifications:

This Spill Container drain valve has been manufactured and tested to the following California specifications: Leak Rate at 0.17 CFH @ 2.0" W.C.

Torque Specification:

Spill Container 4" NPT, 125 ft-lbs minimum to 250 ft-lbs maximum.

4" Nipple, 4" NPT, 125 ft-lbs minimum to 250 ft-lbs maximum.

NOTE: All 4" NPT threads are to be torqued progressively lower from the tank up.

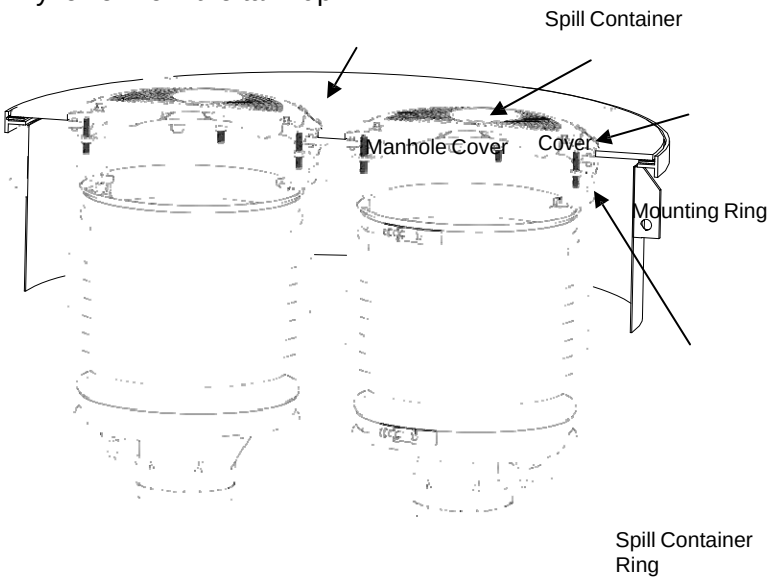

Drain Valve Clamps, 5/16-18 UN thread, 11.5 ft-lbs minimum to 13.5 ft-lbs maximum.

Mounting Ring Stud and Cover Bolts, 5/16-18 UN thread, 15 ft-lbs minimum to 20 ft-lbs maximum.

Roto-Lock Bolt, 1/2-13 UN thread, 40 ft-lbs minimum to 50 ft-lbs maximum.

OPW MULTI-PORT SPILL CONTAINER MANHOLE INSTALLATION INSTRUCTIONS

1. Mark off finish grade. (See Figure 1).

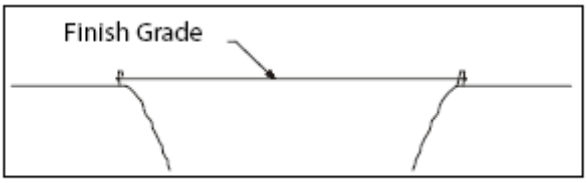

Figure 1

2. Set multi-port manhole assembly (skirt, ring, and cover) to 1 inch minimum (for slope) above the final grade position. The weight of the multi-port assembly must be supported when set into place, this may require a partial backfill and support structure. (See Figure 2.)

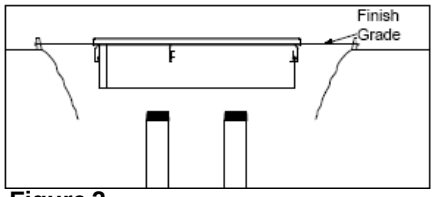

Figure 2

Note: It is strongly recommended that OPW co-

vers be installed with the following minimum clearances. Sheet metal skirts should have adequate clearance between the tank sump riser sidewall and or the sump top hat. A minimum of one and a half inches clearance on all sides is recommended between the OPW skirt and the tank sump wall or the sump top hat wall. A mini- mum of two inches clearance is recommended between the bottom of the OPW skirt and the horizontal surface of the tank sump or sump top hat. These clearances are recommended to allow adequate water migration away from the sumps. Great care should be used to maintain the recommended clearances when setting the rings and pouring the concrete. (See Figure 3.)

3. Remove the cover and measure the distance from the top of the tanks to the final grade.

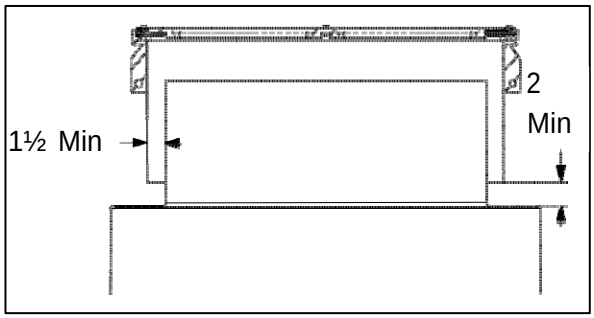

Figure 3

4. Cut the riser(s) from the underground tank so that both the fill and vapor risers are set below the final grade. Use the dimensions below:

Spill Container multiport (L)	Inches below top of
5 Gal. Cast Iron Base	18-1/2”
5 Gal. Composite Base	19-5/8”
7.5 Gal. Cast Iron Base	22-1/2’
7.5 Gal. Composite Base	23-5/8”

NOTE: Add an extra 3-1/4” when using an OPW FSA-400 and add an extra 1 ¾” when using the FSA-400S Face Seal Adaptor. (See Figure 2.) (Offset add extra 6”).Deburr and thoroughly clean riser pipe(s). Apply pipe dope to riser(s). The pipe dope is to be a non-hardening, gasoline resistant, pipe thread seal compound.

5. Install OPW FSA-400 Face Seal Adapter onto riser. (Recommend Torque, 4” NPT, 125 ft-lbs min. to 250 ft-lbs max.). Apply pipe dope to FSA-400. The pipe dope is to be a non-hardening, gasoline resistant, pipe thread seal compound. This is optional for spill containers that are on the vapor lines.

6. Thread on spill containers

7. Using the 61SA-TOOL, tighten the spill container (s) onto the riser(s) with a minimum torque of 125 ft.-lbs. and a maximum torque of 250 ft.-lbs.

NOTE: Do NOT attempt to completely tighten the containment bucket by using the containment bucket mounting ring at the top of the bucket.

NOTE: Ground riser pipe(s) to nearest grounding rod.

8. Inspect the containment bucket O- Rings and Mounting Ring O-Rings for damage. Replace the gasket(s) if they are damaged.

9. Install Optional Multi-Port Water Shroud (MPWS). See separate instructions.

10. Remove Spill Container Cover and Spill Container Mounting ring from Manhole Cover.

11. Replace the multi-port cover, centering the riser (t) as close as possible in the containment openings. Be very careful not to move or damage the O-Rings.

12. Remove lock washers and nuts from the studded mounting ring.

13. Place the mounting ring over the containment buckets and rotate the mounting ring until the studs are aligned with the bucket ring holes. (See Figure 4.)

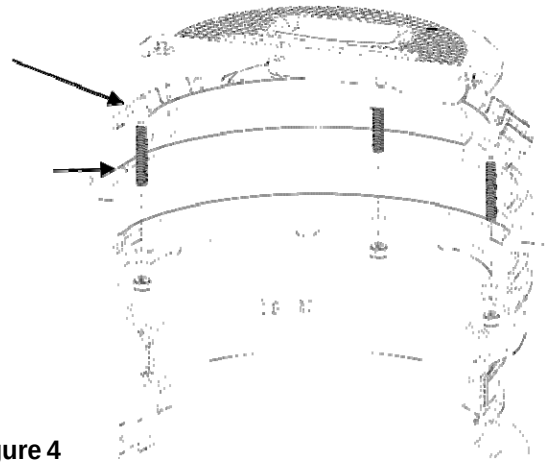

Figure 4

16. Thread nut and lock washer onto studded mounting ring. Tighten the mounting ring retaining bolts until the containment bucket o-rings make contact with the multi-port cover. Then, in a crossing pattern, torque the bolts down between 15 to 20 ft.-lbs. 6 Point Ratcheting box wrench is recommended. (See Figure 5.)

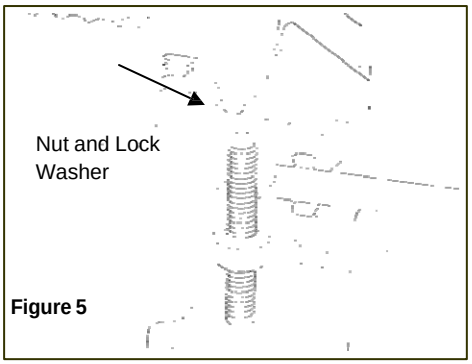

Figure 5

17. Install the spill bucket covers.

18. (Optional): Install the product identification disc on the spill bucket cover and multi-port cover in the I.D. disc recess.

19. Cover the multi-port perimeter ring and cover with plastic to prevent concrete from settling in the drainage areas.

20. It is required that the perimeter ring and skirt assembly, and the multi-port cover be set as an assembled unit, with the bolts engaged. Failure to engage the bolts may result in the distortion of the ring and improper fit of the ring to cover after the concrete is poured. Mounting ring bolts should be torqued to 15 ft-lbs minimum to 20 ft-lbs maximum. Roto-lock bolts should be torqued to 40 ft-lbs minimum to 50 ft-lbs maximum.

21. When pouring the concrete, hand shovel or trowel the concrete around the multi-port assembly to prevent the unit from moving or shifting, which can cause alignment problems and future maintenance problems.

NOTE: Do not stand on the multi-port before the concrete has set up.

22. It is required that the paved contours around POMECO covers be adequately sloped to direct water flow away from the cover, and directing water runoff from adjacent areas away from POMECO covers. Minimum slope is 1" from grade to the top of the ring of the manhole. Note that this slope must be taken into consideration when cutting riser lengths in earlier steps. (See Figure 7.)

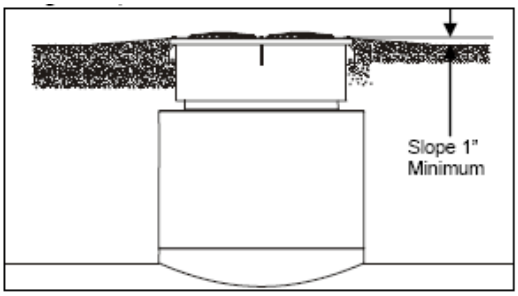

Figure 7

23. Remove the plastic after the concrete has set up. In areas where excessive surface water may be seen, it is recommended to caulk joint around perimeter of cover and perimeter ring with SL1100 sealant.

24. After installation is complete, water test the multi-port fixture. The recommended water test procedures include:

a. Spraying water on cover(s) for 5 to 10 minutes, using a commonly available watering device such as a lawn sprinkler.

b. Standing water test, not to exceed 1/2" in water depth for a period of 5 to 10 minutes.

If water is found on the interior of the spill container or on the skirt (which can be checked through the observation port) that is not due to condensation; determine the root cause of the leak, repair the seal, and retest the unit.

NOTE: The containment bucket consists of three components cast iron ring, bellows, and bucket bottom. These parts are held together with stainless steel retaining bands.

DO NOT loosen the stainless steel retaining bands securing the bellows to the containment bucket top ring or the spill containment bucket bottom. Loosening the retaining bands voids any and all warranties on this product.

WARNING: If the cover is removed, for any reason, follow the Service and Maintenance Instruction (Part Number 202490) as noted. Always inspect and replace damaged O-rings and install new O-rings. Never reuse damaged O-rings as it may result in an improper seal.

Operation and Maintenance:

Annually: Inspect and clean the interior of the spill container and drain valve screen. Remove accumulated dirt and grit. If the drain valve screen becomes clogged, remove the valve, soak in water and use high-pressure air to clean. Reinstall the drain valve to its proper position and test the valve per the appropriate test procedure. If problems persist, replace the drain valve with P/N 1DK-2100-EVR (specified torque 11.5 ft-lbs min to 13.5 ft-lbs max, 5/16-18 UN thread). The sealable cover (1SC) adjustment nut is set at the factory, but due to environmental conditions it may be necessary to adjust it to either improve sealing or ease cover removal.

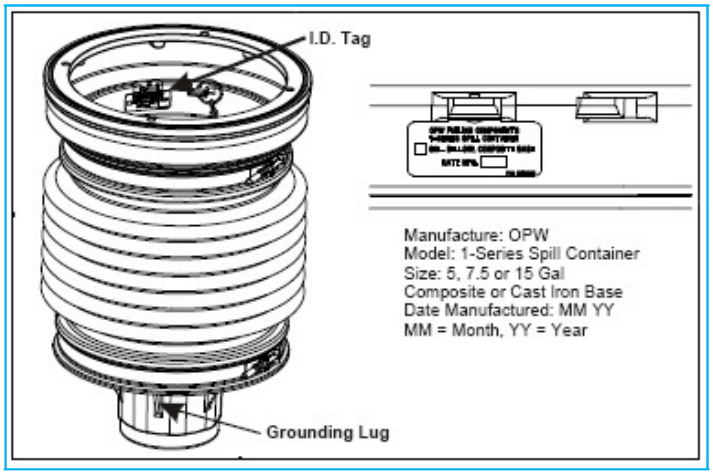

Testing Spill Containers

Use TP201-1C or TP201-1D test procedures. Their Test Procedures will check the seals between the drain valve, nipple and rotatable adapter. To test the spill containers base and bellows fill the container with water. A drop in the water level of 1/16" or greater after one hour means that a leak exists. To determine where the leak is, look for a steady stream of bubbles coming from one of the joints or water leaking on the outside of the bucket. NOTE: Do not drain the water into the UST after the test is complete. Water must be dis- posed of per local requirements for hazardous waste. If the leak cannot be corrected the spill container should be replaced with another.

OPW recommends periodic inspection of covers and seals as a part of the regularly scheduled maintenance program. If any of the seals are damage they should be replace. Only qualified, competent, well-trained technicians should perform maintenance.

NOTE: Common sense and good judgment should always be exercised. The contractor's understanding of all related site conditions prior to starting the project is essential. If the contractor does not have a clear understanding of the required work and site conditions, the contractor is advised to seek clarification prior to starting any portion of the project.

IMPORTANT: Leave these instructions with the Station Operator as per CARB Requirements.

Alternative Construction

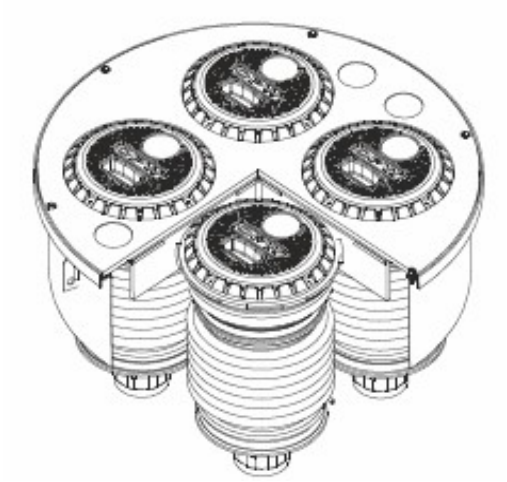

This page intentionally left blank.

OPW Fueling Containment Systems
3250 US 70 Business West
Smithfield, NC 27577
Customer Service:1-(800) 422-2525
Technical Service and Questions:
1-(877) OPW-TECH
www.opwglobal.com

Installation and Maintenance Instructions
OPW 6111-1400 Tank Bottom Protectors

IMPORTANT: Please read these warnings and assembly instructions completely and carefully before starting. Failure to do so may cause product failure, or result in environmental contamination due to liquid leakage into the soil, creating hazardous spill conditions.

IMPORTANT: The OPW Tank Bottom Protector is preassembled for your convenience and ease of installation. Check to make sure the unit is intact and undamaged and all parts have been supplied. Never substitute parts for those supplied. Doing so may cause product failure.

WARNING-DANGER: Using electrically operated equipment near gasoline or gasoline vapors may result in a fire or explosion, causing personal injury and property damage. Be sure that the working area is free from such hazards, and always use proper precautions.

NOTE: At all times when product is in the storage tank keep the riser pipe capped, so the vapors cannot escape into the environment.

Notice: OPW products must be used in compliance with applicable federal, state, and local laws and regulations. Product selection should be based on physical specifications and limitations and compatibility with the environment and material to be handled. All illustrations and specifications in this literature are based on the latest production information available at the time of publication. Prices, materials, and specification are subject to change at any time, and models may be discontinued at any time, in either case, with- out notice or obligation.

Notice: Flex- Works by OPW, Inc., VAPORSAVER™ and all other OPW products must be used in compliance with all applicable federal, state, provincial and local laws, rules and regulations. Product selection is the sole responsibility of the customer and/or its agents and must be based on physical specifications and limitations, compatibility with the environment and material to be handled. All illustrations and specifications in this literature are based on the latest production information available at the time of publication. Prices, materials and specifications are subject to change at any time, and models

This section intentionally left blank.

Tank Bottom Protector:

The OPW Tank Bottom Protector is designed to protect the Underground Storage Tank from damage due to the tank measuring stick being dropped into the tank to measure the fluid level.

OPW TANK BOTTOM INSTALLATION INSTRUCTIONS

1. Check the distance from the bottom of the fill tube to the bottom of the tank. Verify that this distance is in conformance with manufacturer's recommendations and Local Codes. Remove the drop tube from the tank.
2. Using a # 11 Drill (0.191") - Drill a hole into the fill tube about 1/2" above and 1" to 1 1/16 over from point "A" (see figures 1 and 2). Keep in mind that the OPW Tank Bottom Protector must rest on the bottom of the tank.
3. Insert the OPW Tank Bottom Protector and line up the # 11 hole in the sliding rod guide with the corresponding hole just drilled in the drop tube. Make sure that point "A" is clear for future measurements of the drop tube's length. (See figure 2).
4. Attach the OPW Tank Bottom Protector with the pop rivet supplied. Drill two more # 11 holes into the drop tube and sliding rod guide at the same time. Install supplied pop rivets into new holes.
5. Check to ensure that the OPW Tank Bottom Protector slides up and down without binding.
6. Reinstall fill tube into the tank.

**Check local codes and regulation for proper dimension.*

This section intentionally left blank.

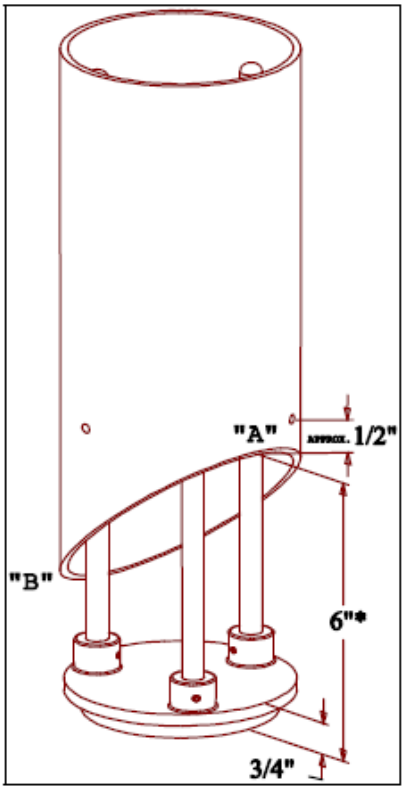

Figure 1

This section intentionally left blank.

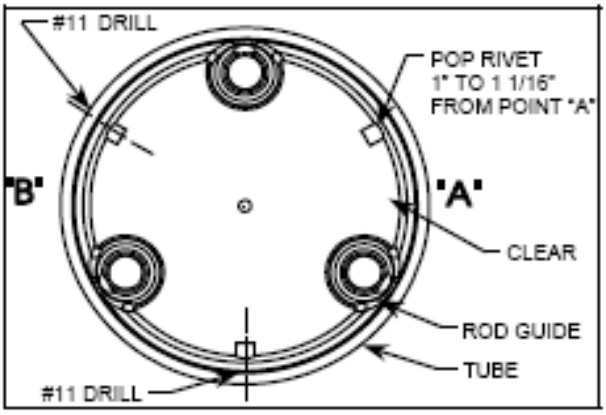

Figure 2

Husky Model 5885 Pressure/Vacuum Vent Valve

MODEL #5885
Recommended Installation, Maintenance and Inspection Instructions

EVR Pressure Vacuum Vent

5885

IMPORTANT SAFETY INSTRUCTIONS - SAVE THESE INSTRUCTIONS IN A READILY ACCESSIBLE LOCATION.

⚠ WARNING Designed for use at motor fuel dispensing facilities only.

INSTALLATION INSTRUCTIONS

NOTE: Always adhere to installation / usage instructions and warnings. Improper use may result in injury, damage or hazardous spill.

1. Remove the vent from the carton and visually inspect for any shipping damage.
2. Apply fuel resistant pipe sealant to the threads on the 2" / 50.8 mm vent stack.
3. Screw the Pressure Vacuum (P/V) vent onto the vent stack and tighten firmly, approximately 20 - 50 lbf•ft / 27.1 - 67.8 N•m, but do not overtighten.

CAUTION: DO NOT ALTER OR COVER THE P/V VENT

TESTING / MAINTENANCE / INSPECTION

Testing Criteria Per TP201.1E and Exhibit 3 of applicable Phase 1 E.O.

Leak rate: Pressure = .05 CFH @ 2" wc, Vacuum = .21 CFH @ -4" wc.
Cracking Pressure = 2 1/2" to 6" wc, Vacuum = -6" to -10" wc.

Annually Inspect the P/V vent valve for foreign objects:

1. Remove the screws that hold on the top cover. Do not remove the screens.
2. Remove any debris from inside the lower cover.
3. Check the drain holes in the lower cover.
4. Reinstall the top cover.
5. Tighten the screws firmly.

- All drive aways, maintenance and inspection activities must be logged using the serial number of the individual product.
- Apply city, state, or federal testing regulations as appropriate.

ANY TEST / INSPECTION FAILURE REQUIRES IMMEDIATE EQUIPMENT REPLACEMENT OR REMOVAL FROM SERVICE.

MADE IN THE USA

ALWAYS ADHERE TO INSTALLATION / USAGE INSTRUCTIONS AND WARNINGS.
Improper use may result in injury, damage, or hazardous spill.

GENERAL WARNINGS / INSTRUCTIONS PERTAINING TO A RISK OF FIRE, ELECTRIC SHOCK OR INJURY TO PERSONS:

- Use of equipment is at individuals' own risk.
- Always abide and adhere to city, state, and federal regulations regarding use and installation of dispensing equipment. Always follow the dispenser manufacturer's instructions.
- Always turn off all power to dispenser during maintenance and inspection activities.
- Always close the shear valves during maintenance and inspection activities.
- Always relieve pressure from system prior to performing maintenance activities.
- Always check continuity after installation using a megohmeter (Refer to PEI RP 400 for details).
- Always replace or remove from service damaged or leaking dispensing equipment immediately. Always report leaks / spills / accidents to appropriate authorities.
- Always wear appropriate safety equipment during maintenance activities.
- Always have appropriate fire extinguishing equipment within 5 ft / 1.5 m of dispensers.
- Always use pipe sealant approved for gasoline service.
- Always place containers on the ground before filling.
- Always discharge static electricity before using or servicing equipment by touching a metal part of the dispenser before and after fueling vehicle.
- Never smoke within 20 ft / 6.1 m of dispensers.
- Never keep in service past recommended life.
- Never leave the nozzle unattended while dispensing fuel.
- Never use sparking or flaming devices within 20 ft / 6.1 m of dispensers.
- Never use power tools near dispensers or to aid in the installation process.
- Never use cell phone within 20 ft / 6.1 m of dispensers.
- Never reenter car when fueling vehicle.
- Never allow gasoline to touch eyes or skin.
- Never use at flow rates in excess of regulatory guidelines.
- Never use at flow rates less than 5 gpm / 18.9 Lpm.
- Never dispense flammable material into unapproved containers.
- Never dispense fuel without a valid driver's license.

CAUTION: DO NOT ALTER OR COVER THE P/V VENT.

DO NOT OVERTIGHTEN.

IMPORTANT SAFETY INSTRUCTIONS - SAVE THESE INSTRUCTIONS IN A READILY ACCESSIBLE LOCATION.

WARRANTY

VAPOR PRODUCTS – Husky Corporation will, at its option, repair, replace, or credit the purchase price of any Husky manufactured product which proves upon examination by Husky, to be defective in material and/or workmanship for a period of one (1) year of installation or fifteen (15) months from the manufacture date of shipment by Husky, whichever occurs first. The warranty period on repaired or replacement vapor recovery products is only for the remainder of the warranty period of the defective product.

EVR PRODUCTS – With respect to EVR products installed in California, for a period of one (1) year from the date of installation, Husky warrants that the product will be free from defects in materials and workmanship (if the installation date is in question or indeterminable, Husky will warrant the product for 12 months from sale by Husky). Husky confirms that the warranty is transferable to a subsequent purchaser within the warranty period. However, the warranty does not follow the product from its initial installation location to succeeding locations. Husky confirms these products are warranted to meet the performance standards and specifications to which it was certified by CARB for the duration of the warranty. EVR products must be installed per CARB Executive Order and must follow the Husky Installation Instructions or the warranty is void. The warranty tag included with the EVR product must be provided to the end user at installation. A completed warranty tag and installation documentation is required to be returned with the product to be eligible for warranty consideration.

CONVENTIONAL PRODUCTS – Husky Corporation will, at its option, repair, replace, or credit the purchase price of any Husky manufactured product which proves upon examination by Husky, to be defective in material and/or workmanship for a period of one (1) year from the manufacture date of shipment by Husky.

Buyer must return the products to Husky, transportation charges prepaid. This Warranty excludes the replaceable bellows, bellows spring assembly, spout assembly and scuff guard, unless (i) damage is obvious when the product is removed from shipping carton and (ii) the defective product is returned to Husky prior to use. This warranty does not apply to equipment or parts which have been installed improperly, damaged by misuse, improper operation or maintenance, or which are altered or repaired in any way.

The warranty provisions contained herein apply only to original purchasers who use the equipment for commercial or industrial purposes. There are no other warranties of merchantability, fitness for a particular purpose, or otherwise, and any other such warranties are hereby specifically disclaimed.

Husky assumes no liability for labor charges or other costs incurred by Buyer incidental to the service, adjustment, repair, return, removal or replacement of products. Husky assumes no liability for any incidental, consequential, or other damages under any warranty, express or implied, and all such liability is hereby expressly excluded.

Husky reserves the right to change or improve the design of any Husky fuel dispensing equipment without assuming any obligations to modify any fuel dispensing equipment previously manufactured.

3" to 2" ADAPTOR INSTALLATION INSTRUCTIONS

Part #5041

1. Visually inspect the o-ring and threads for chips, dirt & debris.
2. Apply fuel resistant pipe sealant to the 3 in / 76.2 mm NPTF threads of the vent pipe.
3. Screw the P/V vent adaptor onto the vent stack and tighten firmly, approximately 20 - 50 lbf•ft / 27.1 - 67.8 N•m, but do not overtighten.
4. Install the P/V vent according to manufacturer's installation instructions.

TEST ADAPTOR INSTALLATION INSTRUCTIONS

Part #5426

NOTE: This adaptor is designed to fit on the inlet of the P/V Vent to allow for field and lab tests.

1. Screw P/V Vent adaptor into the P/V Vent valve until hand tight. Make sure the seal is compressed.
2. Place the P/V Vent valve and adaptor on a flat surface.
3. Attach a 3/16" / 4.7 mm hose (Tygon fuel tubing) from test apparatus to hose barb on the side of the adaptor.
4. After testing, remove hose from barb and remove adaptor from vent.

TROUBLESHOOTING GUIDE

Pressure Decay Test Failure...	1. Test vent to CARB TP201.1E. 2. Replace vent.
For stations with ISD monitoring	
Vapor leak...	1. Verify other equipment is not the cause. 2. Test vent to CARB TP201.1E 3. Replace vent.
Exceeds allowable system cracking pressure...	1. Replace vent

GENERAL TECHNICAL DATA

Fuel Type	Test and warranty for gasoline and diesel fuel
Body	Sand cast aluminum
Screens	Stainless Steel 40 mesh
Seal	Nitrile Foam
Covers	Aluminum
Weight	1.2 lbs / 0.5 kg
Threads	2 in / 50.8 mm NPTF
Case Quantity	20
Listings	AIR RESOURCES BOARD; Texas Commission on Environmental Quality; Missouri Department of Natural Resources

CARB EVR Executive Order Numbers: VR-101, VR-102, VR-103, VR-104, VR-105, VR-401-B, VR-402-A, VR-301, VR-302

FFS Model PV-Zero Pressure/Vacuum Vent Valve

Franklin Fueling Systems

PV-ZERO™
Liquid-Filled Pressure/Vacuum Vent Valve

FFS P/N 407215901

Installation, Testing and Maintenance Manual

Franklin Fueling Systems • 3760 Marsh Rd. • Madison, WI 53718 USA
Tel: +1 608 838 8786 • 800 225 9787 • Fax: +1 608 838 6433 • www.franklinfueling.com

Warning This symbol identifies a warning. A warning sign will appear in the text of this document when a potentially hazardous situation may arise if the instructions that follow are not adhered to closely. A potentially hazardous situation may involve the possibility of severe bodily harm or even death.

Caution This is a caution symbol. A caution sign will appear in the text of this document when a potentially hazardous environmental situation may arise if the instructions that follow are not adhered to closely. A potentially hazardous environmental situation may involve the leakage of fuel from equipment that could severely harm the environment.

Danger This symbol identifies an electrical danger. An electrical danger sign will appear in the text of this document when a potentially hazardous situation involving large amounts of electricity may arise if the instructions that follow are not adhered to closely. A potentially hazardous situation may involve the possibility of electrocution, severe bodily harm, or even death.

Warning **Follow all federal, state and local laws governing the installation of this product and its associated systems. When no other regulations apply, follow NFPA codes 30, 30A and 70 from the National Fire Protection Association. Failure to follow these codes could result in severe injury, death, serious property damage and/or environmental contamination.**

Warning **Always secure the work area from moving vehicles. To help eliminate unsafe conditions, secure the area by using a service truck to block access to the work environment, or by using any other reasonable means available to ensure the safety of service personnel.**

Warning **The PV-ZERO is used with tanks containing gasoline or other flammable substances, you may create an explosion hazard if you do not follow the requirements in this manual carefully.**

Description of the FFS PV-ZERO Liquid Filled P/V Vent Valve

The PV-ZERO operates using a similar concept to a common P-Trap used in plumbing drain applications to create a liquid air seal. The liquid seals the UST ullage vapors from the atmosphere while still maintaining the proper differential pressure set-points. After the differential pressure has been exceeded, air or vapor bubbles through the liquid media until the pressure returns to the operational pressure settings. Figures 1-3 illustrate the operation of the PV-ZERO.

The PV-ZERO has no moving parts and the only maintenance required is periodic inspection of the liquid.

Because the PV-ZERO does not use seals or gaskets to seal off the UST ullage from atmosphere, the unit will not allow vapor or air to pass through at pressure less than the cracking set-point. As long as the valve is filled with 1.6 liters (54 ozs) of PV-ZERO fluid, the stainless steel valve housing is not damaged, and the pipe fittings are correctly installed, the unit should be leak free.

The liquid used for the PV-ZERO unit is silicone-based and has an very low vapor pressure and low toxicity.

The PV-ZERO can be mounted either at the top of the vent rack or in-line (mid-mount at working level). To avoid the risk of climbing a ladder and to maximize the simplicity of inspection and service, the preferred installation of the PV-ZERO is to be mounted in-line. It can be mounted on a single riser pipe or many riser pipes manifolded to a single line. The PV-ZERO is designed to mount on 3" riser piping, but can also be installed on 2" riser piping.

See drawings on pages 9-11 for mounting options.

*** Refer to CARB EVR documents regarding equipment rules for manifold systems.***

A support frame should be used for mounting all vent riser piping and must be used to stabilize the piping above the PV-ZERO if it is to be mounted in-line.

If the PV-ZERO is to be top mounted, the support frame must stabilize the piping below the unit (and the unit itself). Check local agencies for support frame requirements and consult a licensed structural engineer if in doubt of the structural integrity of the vent rack support system.

Note: Do not mount the PV-ZERO unit on a free standing vent piping system without a support frame!

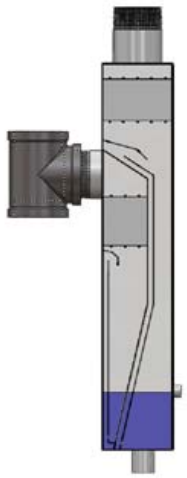

Figure 1: No Differential

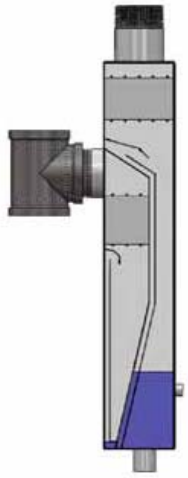

Figure 2: Positive Cracking

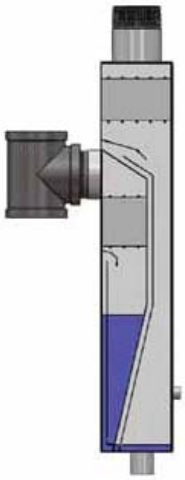

Figure 3: Negative Cracking

Installation

Note: Use a thread sealant that is approved for gasoline and gasoline-ethanol blends such as Gasoila Soft Set or Jomar Heavy Weight for all threaded pipe fittings and plugs. The 3" side tee and 1" bottom drain plug are factory installed. Tighten all fittings per recognized industry installation standards.

1. Thread the bottom of the 3" side tee onto the vent riser piping. The PV-ZERO may be mounted mid-line or top mounted on a single riser or a manifolded system (see drawings, pages 9 &10). For 2" riser piping systems, use a 3x2" NPT reducing coupling with a 3" pipe nipple at least 6" long (see drawing, page 11).
2. Make sure the PV-ZERO unit is plumb within ±3º and not set at an angle. Failure to set in the vertical position may cause improper operation.
3. For mid-line mounting installations, install and secure the rest of the 3" discharge piping on the vent rack (refer to NFPA 30 for specific fuel system vent piping requirements). **Be sure to use a pipe wrench to counteract the tightening force to the valve!**
4. Fill the PV-ZERO unit through the side port with 1.6 liters (54 oz.) of PV-ZERO fluid (FFS p/n 407220001) provided with the unit. It may also be filled through the discharge outlet fitting (top). **Do not pour into the 3" side tee fitting!**

Note: To fill the fluid in the PV-ZERO, the UST (Underground Storage Tank) must be open to the atmosphere OR the inflatable test plug needs to be installed to reach the correct level. If the tank is under pressure or vacuum, the correct fill level cannot be obtained.

5. Install the side plug.
6. Perform the **Field Testing Procedure**.
7. Install the 3" pipe plug on top of the tee.
8. Attach the 3" upward-venting rain cap provided. Attach to the top of the vent pipe (mid-mount installation) or directly to the top of the PV-ZERO (top mount) **Keep the rain cap installed to minimize water intrusion, and to ensure proper operation.**

The PV-ZERO may be painted, however, do not paint over or cover the nameplate placards decals.

Field Testing

Note: Compliance testing of the PV-ZERO, if required by the local air quality district, shall be conducted in accordance with California Air Resources Board (CARB) test procedure TP-201.1E and Exhibit 2 of the Executive Order. This test shall be conducted using the PV-ZERO test cap assembly (FFS p/n 407225901) with the valve in its installed condition. The PV-ZERO can be tested without removing the unit from the vent rack.

There are (3) ports on the PV-ZERO test cap assembly (see page 8):

- 1 – Schrader valve connection for the inflatable plug
- 1 – 1/4" hose barb (for pressure/vacuum supply)
- 1 – 1/8" hose barb (for manometer)

1. Remove 3" pipe plug from top of tee (if necessary).
2. Install the test cap assembly through the top of the 3" tee, allowing the inflatable plug to extend into the vent riser pipe - tighten fully.
3. Inflate the inflatable plug to 35 PSI.
4. Test per CARB TP-201.1E
5. Deflate the inflatable plug.
6. Remove test cap assembly from 3" tee.

Recommended Maintenance Intervals

- **Every year**: Visually inspect the housing, pipe, fittings, and rain cap for obvious signs of damage, missing parts, or fluid leaks.
- **Every year**: Visually inspect the rain cap, from ground level, for signs of bird nests or insect activity.
- **Every year**: Drain and inspect the fill fluid per the ***Fluid Inspection Procedure***.

Fluid Handling

The PV-ZERO is filled with a silicone based fluid, p/n 407220001 (contact FFS for MSDS sheet). The PV-ZERO fill fluid is resistant to UV exposure, does not support bioactivity and is resistant to oxidation.

Since the PV-ZERO is exposed to tank ullage vapors, used PV-ZERO fill fluid may contain trace amounts of ethanol and gasoline. The maintenance technician servicing the PV-ZERO should wear appropriate eye protection and nitrile gloves when inspecting or servicing the fill fluid. Check with local and state regulations regarding handling, transportation, recycling and disposal of silicone based fluids.

Fluid Inspection Procedure

1. Remove the 3" NPT plug from the top of the side tee.
2. Remove the 3/8" NPT side plug.
3. Remove the 1" NPT bottom plug and drain the fluid into a clean, transparent container.
4. Visually inspect the fill fluid for debris or water contamination. Since the specific gravity of the fluid is slightly less than water, any water in the fluid will settle to the bottom. The fluid can be reused indefinitely as long as it is free of sediment and water.

Note: Clean fluid can be refilled into the valve and topped off with new fluid, or it can be completely replaced with new fluid.

5. Reinstall the 1" NPT bottom plug.
6. Refill the PV-ZERO valve with fluid through the side-port until it spills out of the port. This is the correct fill level of 1.6 liters (54 oz.).
7. Reinstall the 3/8" NPT side plug.
8. Perform the ***Field Testing Procedure***
9. Reinstall the 3" NPT plug in the top of the side tee.

Only use the approved PV-ZERO fluid (P/N 407220001). Substitution of other fluids voids the warranty and can cause vapor leaks!

PV-ZERO Specifications

Height:	33.5"
Width:	5.0"
Length:	12.3"
Dry weight:	20#
Inlet piping connection	3" NPT
Discharge piping connection	3" NPT
Fill port	3/8" NPT
Drain port	1" NPT
Construction material	304 stainless steel
Fuel Compatibility	Gas & E85
Pressure leak rate	<< 0.05CFH at +2.0 W.C.
Vacuum leak rate	<< 0.21 CFH at -4.0 W.C.
Pressure drop at 60 cfm flow rate with tank positive pressure	14" W.C.
Pressure drop at 90 cfm flow rate with tank positive pressure	28" W.C.
Minimum operating temperature	-40°F (-40°C)
Maximum operating temperature	130°F (54°C)
Maximum test pressure	5 PSI
Maximum mounting angle deviation from vertical	3°

Drawing List:

Page	Drawing Description
6	PV-ZERO Operating Assembly
7	PV-ZERO Overall Dimensions
8	Test Cap Description
9	3" Manifolded Mid Mount
10	3" Mounting Assembly
11	2" Mounting Assembly

The drawings are on the following pages.

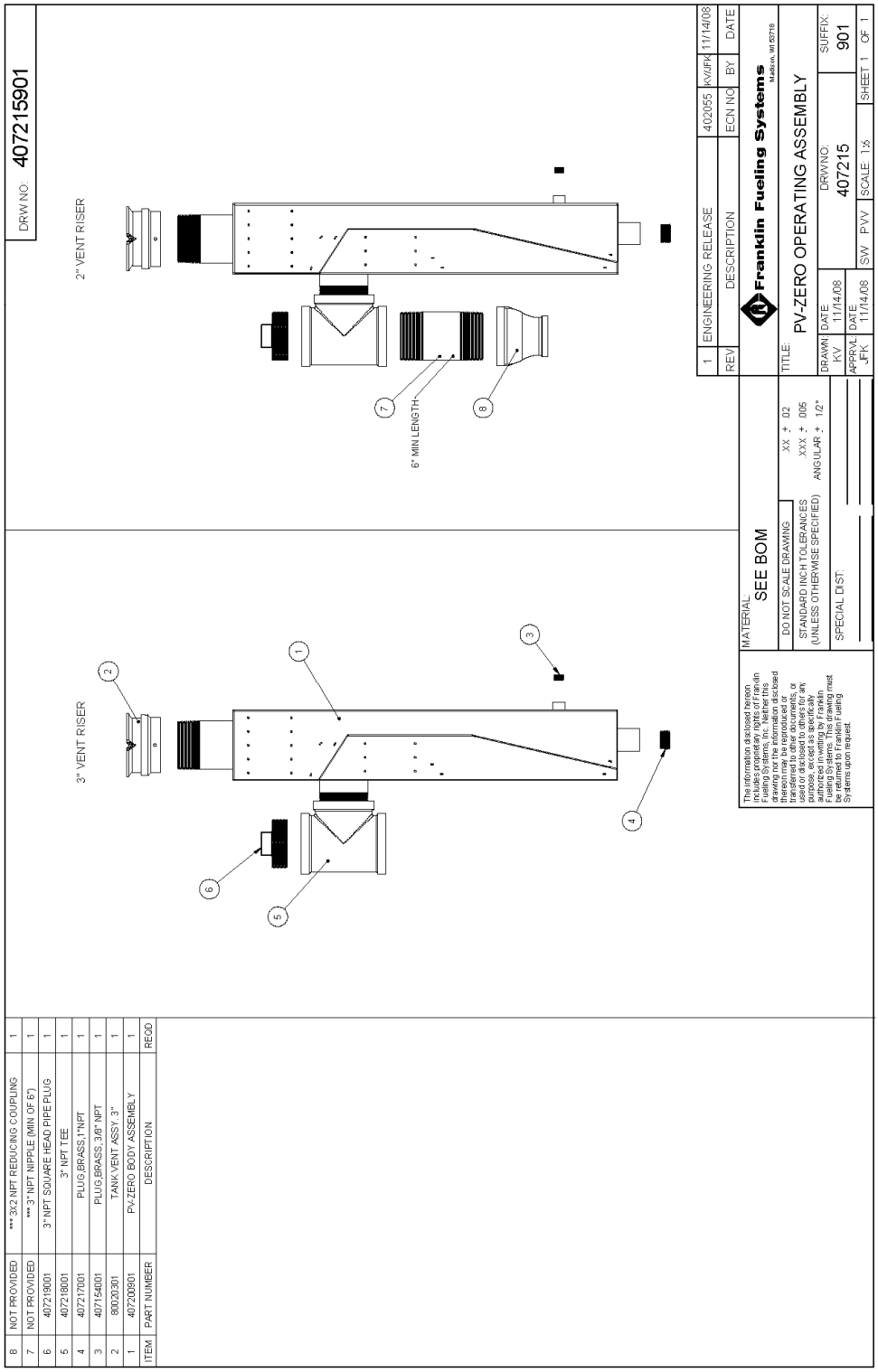
DRW NO. 407215901
2" VENT RISER
6" MIN LENGTH
3" VENT RISER
1 ENGINEERING RELEASE 402055 KV/JFK 11/14/08
REV DESCRIPTION ECN NO BY DATE
Franklin Fueling Systems
Madison, WI 53718
TITLE: PV-ZERO OPERATING ASSEMBLY
DRAWN KV DATE 11/14/08
APPRVL JFK DATE 11/14/08
DRW NO: 407215
SUFFIX: 901
SW PVV SCALE 1:6 SHEET 1 OF 1
MATERIAL: SEE BOM
DO NOT SCALE DRAWING
STANDARD INCH TOLERANCES (UNLESS OTHERWISE SPECIFIED)
.XX ± .02
.XXX ± .005
ANGULAR ± 1/2°
SPECIAL DIST:
The information disclosed herein (including any accompanying models) in this drawing not the information disclosed therein may be reproduced or transferred to other documents, or used or disclosed to others for any purpose, except as specifically authorized in writing by Franklin Fueling Systems. This drawing must be returned to Franklin Fueling Systems upon request.
8 NOT PROVIDED *** 3X2 NPT REDUCING COUPLING 1
7 NOT PROVIDED *** 3" NPT NIPPLE (MIN OF 6") 1
6 407219001 3" NPT SQUARE HEAD PIPE PLUG 1
5 407218001 3" NPT TEE 1
4 407217001 PLUG,BRASS,1"NPT 1
3 407154001 PLUG,BRASS,3/8" NPT 1
2 80020301 TANK VENT ASSY, 3" 1
1 407200901 PV-ZERO BODY ASSEMBLY 1
ITEM PART NUMBER DESCRIPTION REQD

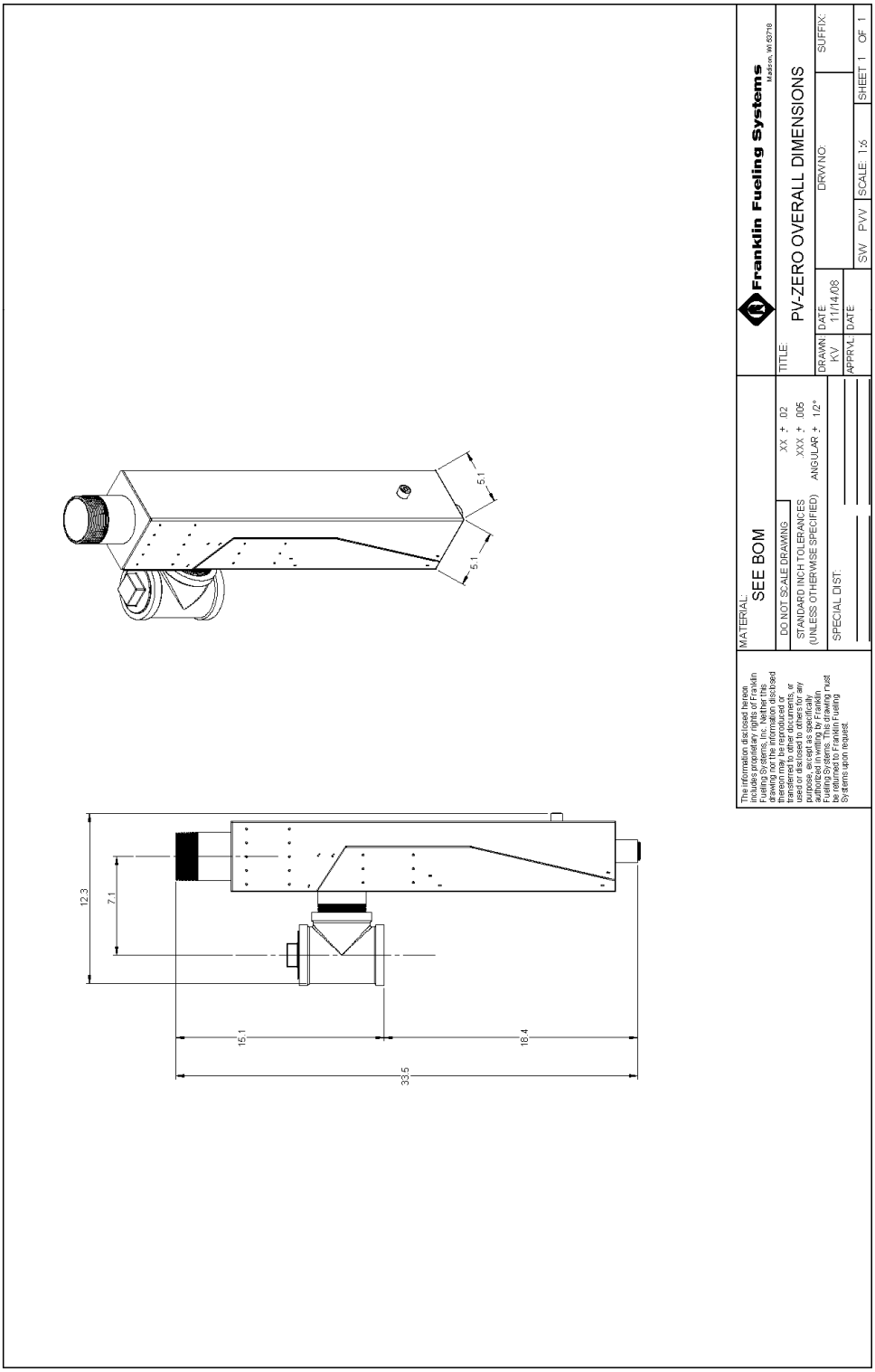
5.1
5.1
12.3
7.1
15.1
18.4
33.5
MATERIAL:
SEE BOM
DO NOT SCALE DRAWING
STANDARD INCH TOLERANCES
(UNLESS OTHERWISE SPECIFIED)
XX ± .02
XXX ± .005
ANGULAR ± 1/2°
SPECIAL DIST:
The information disclosed hereon includes proprietary rights of Franklin Fueling Systems, Inc. Neither this drawing nor the information disclosed thereon may be reproduced or transferred to other documents, or used or disclosed to others for any purpose except as specifically authorized in writing by Franklin Fueling Systems. This drawing must be returned to Franklin Fueling Systems upon request.
Franklin Fueling Systems
Madison, WI 53718
TITLE:
PV-ZERO OVERALL DIMENSIONS
DRAWN KVV
DATE 1/1/14/08
APPRVL
DATE
DRWG NO:
SUFFIX:
SW PVV
SCALE: 1:6
SHEET 1 OF 1

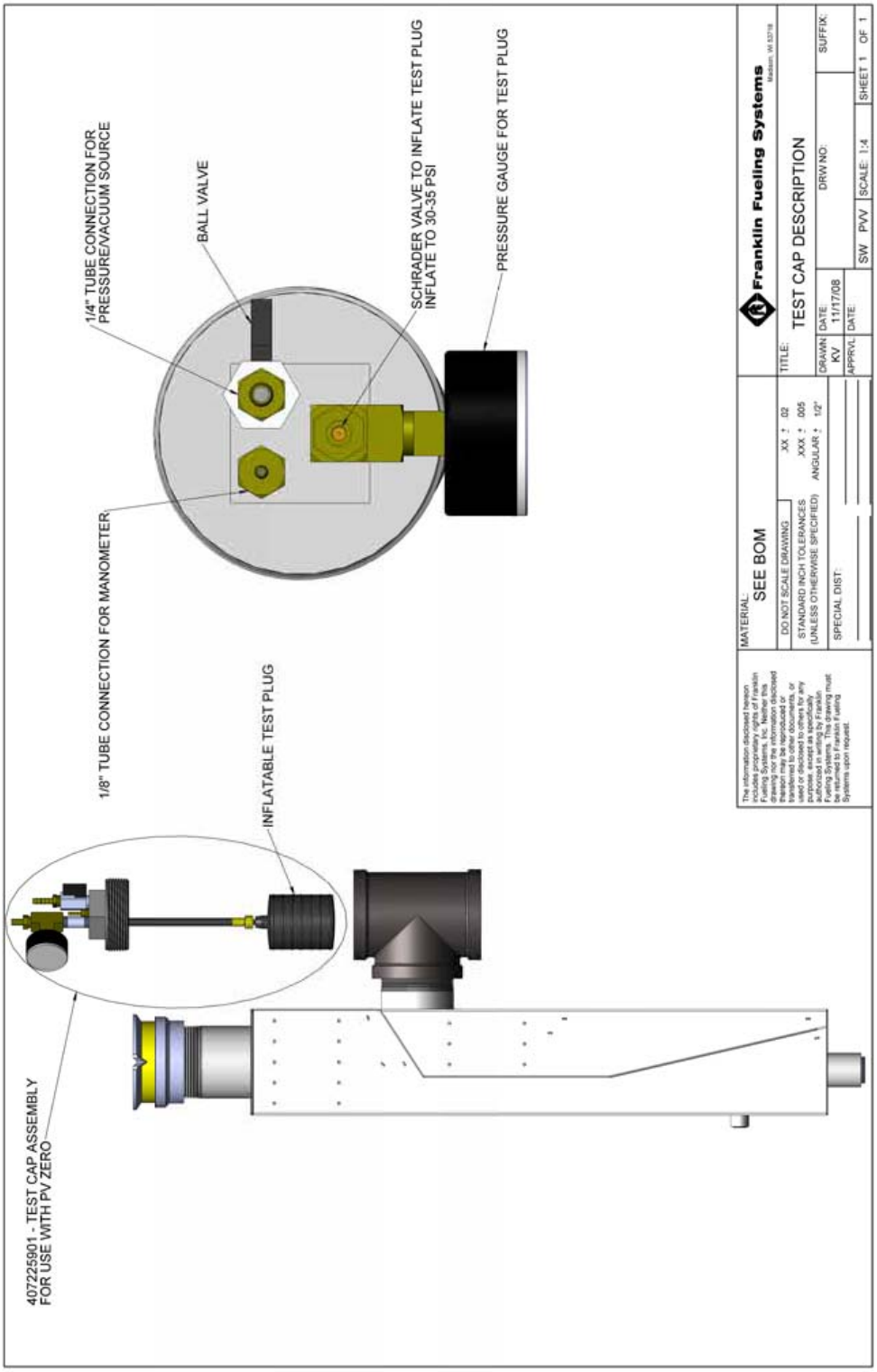
1/4" TUBE CONNECTION FOR PRESSURE/VACUUM SOURCE
BALL VALVE
SCHRADER VALVE TO INFLATE TEST PLUG INFLATE TO 30-35 PSI
PRESSURE GAUGE FOR TEST PLUG
1/8" TUBE CONNECTION FOR MANOMETER
INFLATABLE TEST PLUG
407225901 - TEST CAP ASSEMBLY FOR USE WITH PV ZERO
MATERIAL: SEE BOM
DO NOT SCALE DRAWING
STANDARD INCH TOLERANCES (UNLESS OTHERWISE SPECIFIED)
XX ± .02
XXX ± .005
ANGULAR ± 1/2°
SPECIAL DIST:
APPRVL:
DATE:
TITLE: TEST CAP DESCRIPTION
DRAWN: KV
DATE: 11/17/08
DRW NO:
SUFFIX:
SW PVV
SCALE: 1:4
SHEET 1 OF 1
Franklin Fueling Systems
Madison, WI 53718
The information disclosed hereon includes proprietary rights of Franklin Fueling Systems, Inc. Neither this drawing nor the information disclosed thereon may be reproduced or transferred to other documents, or used or disclosed to others for any purpose except as specifically authorized in writing by Franklin Fueling Systems. This drawing must be returned to Franklin Fueling Systems upon request.

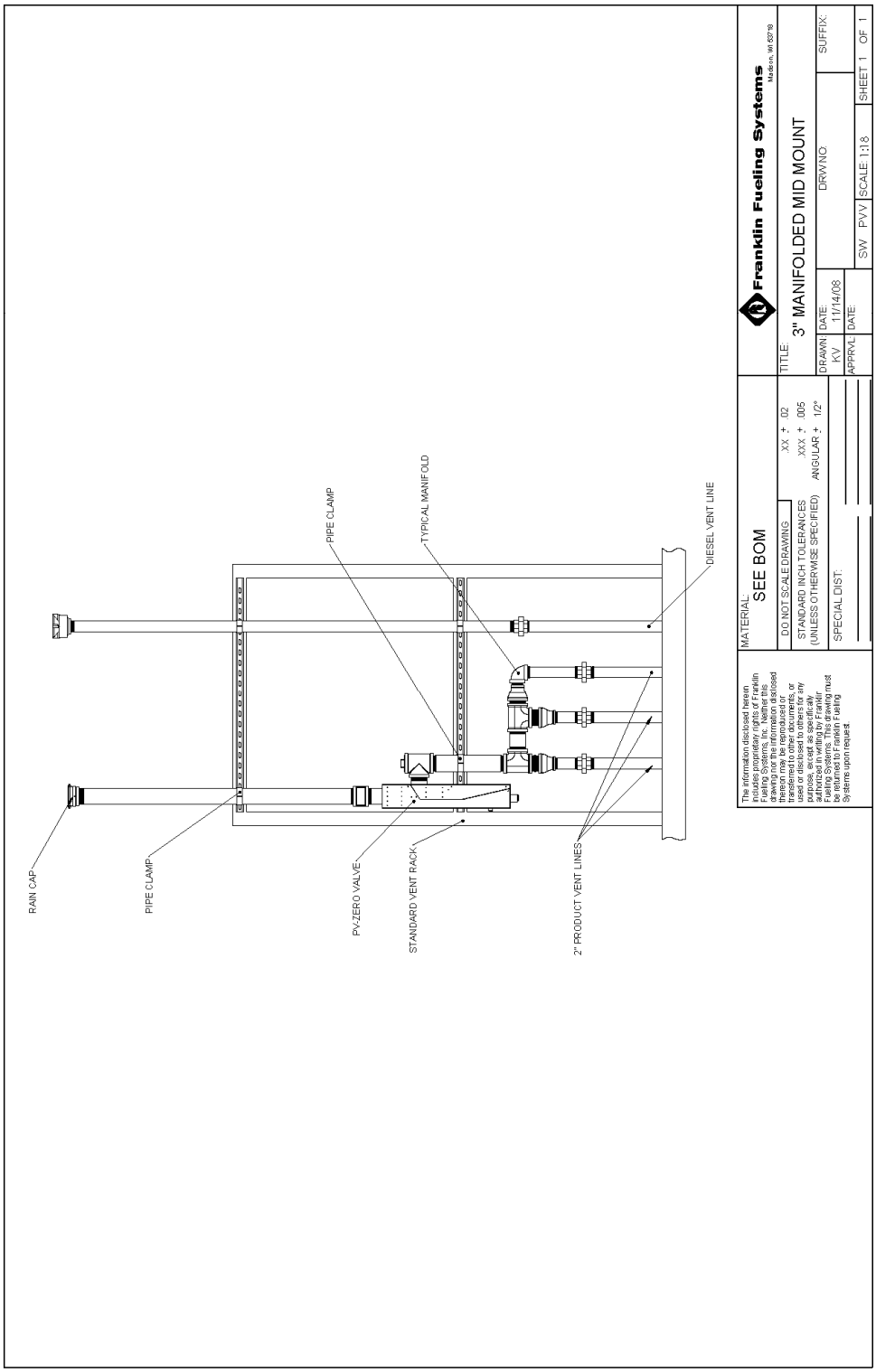
RAIN CAP
PIPE CLAMP
PV-ZERO VALVE
STANDARD VENT RACK
2" PRODUCT VENT LINES
PIPE CLAMP
TYPICAL MANIFOLD
DIESEL VENT LINE
The information disclosed herein includes proprietary rights of Franklin Fueling Systems, Inc. Neither this drawing nor the information disclosed thereon nor the product(s) shown, transferred to other documents, or used or disclosed to others for any purpose, in whole or in part, without the express written consent of Franklin Fueling Systems. This drawing must be returned to Franklin Fueling Systems upon request.
MATERIAL:
SEE BOM
DO NOT SCALE DRAWING
STANDARD INCH TOLERANCES (UNLESS OTHERWISE SPECIFIED)
.XX ± .02
.XXX ± .005
ANGULAR ± 1/2°
SPECIAL DIST:
Franklin Fueling Systems
Madison, WI 53718
TITLE:
3" MANIFOLDED MID MOUNT
DRAWN: KV
DATE: 11/14/08
APPRVL:
DATE:
DRWNO
SUFFIX:
SW PVV
SCALE: 1:18
SHEET 1 OF 1

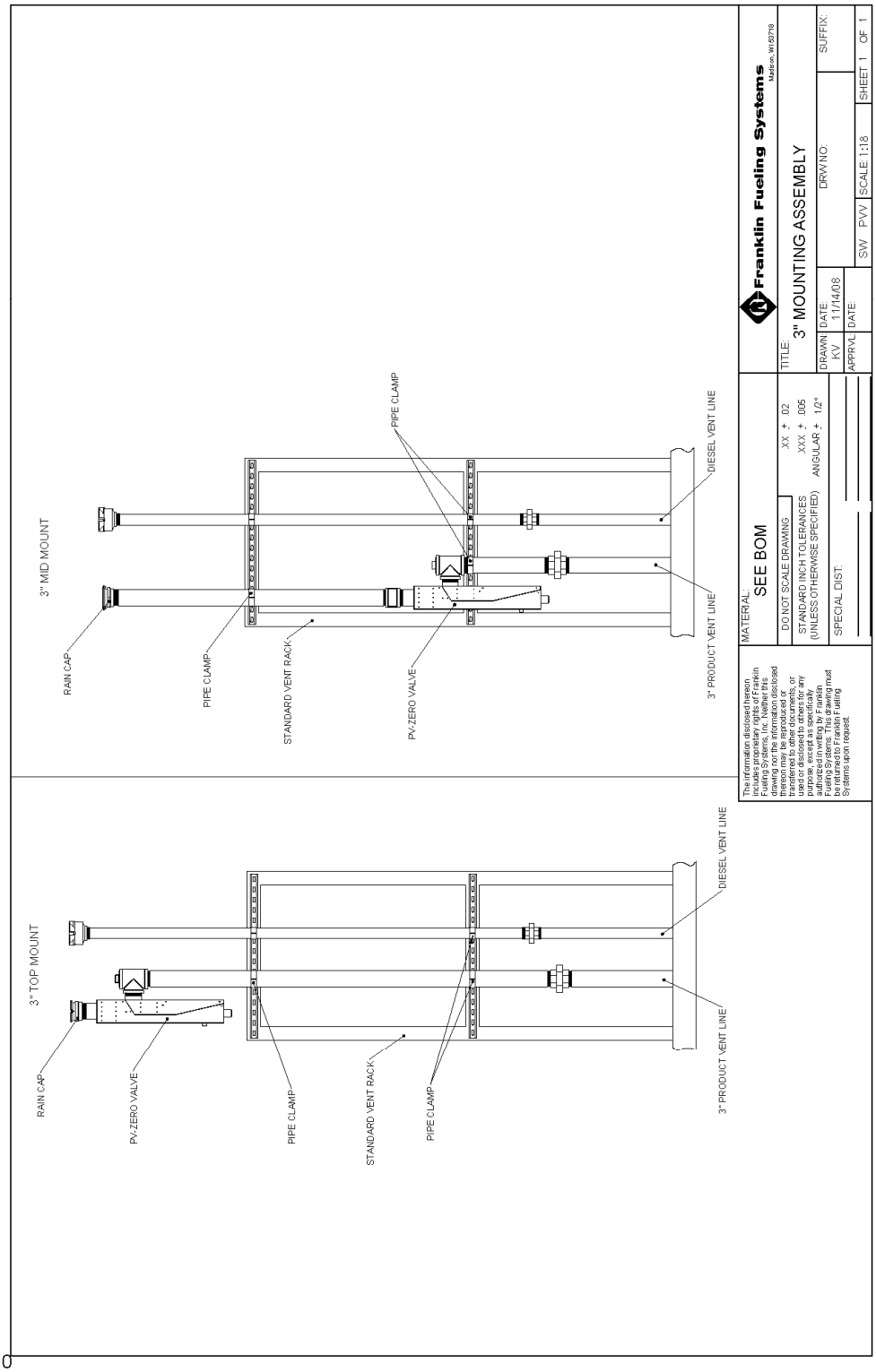
3" MID MOUNT
RAIN CAP
PIPE CLAMP
STANDARD VENT RACK
PV-ZERO VALVE
PIPE CLAMP
DIESEL VENT LINE
3" PRODUCT VENT LINE
3" TOP MOUNT
RAIN CAP
PV-ZERO VALVE
PIPE CLAMP
STANDARD VENT RACK
PIPE CLAMP
DIESEL VENT LINE
3" PRODUCT VENT LINE
The information disclosed herein (including drawings) is the property of Franklin Fueling Systems, Inc. Neither this drawing nor the information disclosed thereon may be reproduced or transferred to other documents, or used or disclosed to others for any purpose, except as specifically authorized in writing by Franklin Fueling Systems. This drawing must be returned to Franklin Fueling Systems upon request.
MATERIAL
SEE BOM
DO NOT SCALE DRAWING
STANDARD INCH TOLERANCES (UNLESS OTHERWISE SPECIFIED)
.XX ± .02
.XXX ± .005
ANGULAR ± 1/2°
SPECIAL DIST:
Franklin Fueling Systems
Madison, WI 53718
TITLE:
3" MOUNTING ASSEMBLY
DRAWN: KV
DATE: 11/14/08
APPRVL:
DATE:
DRWG NO:
SUFFIX:
SW PVV
SCALE 1:18
SHEET 1 OF 1

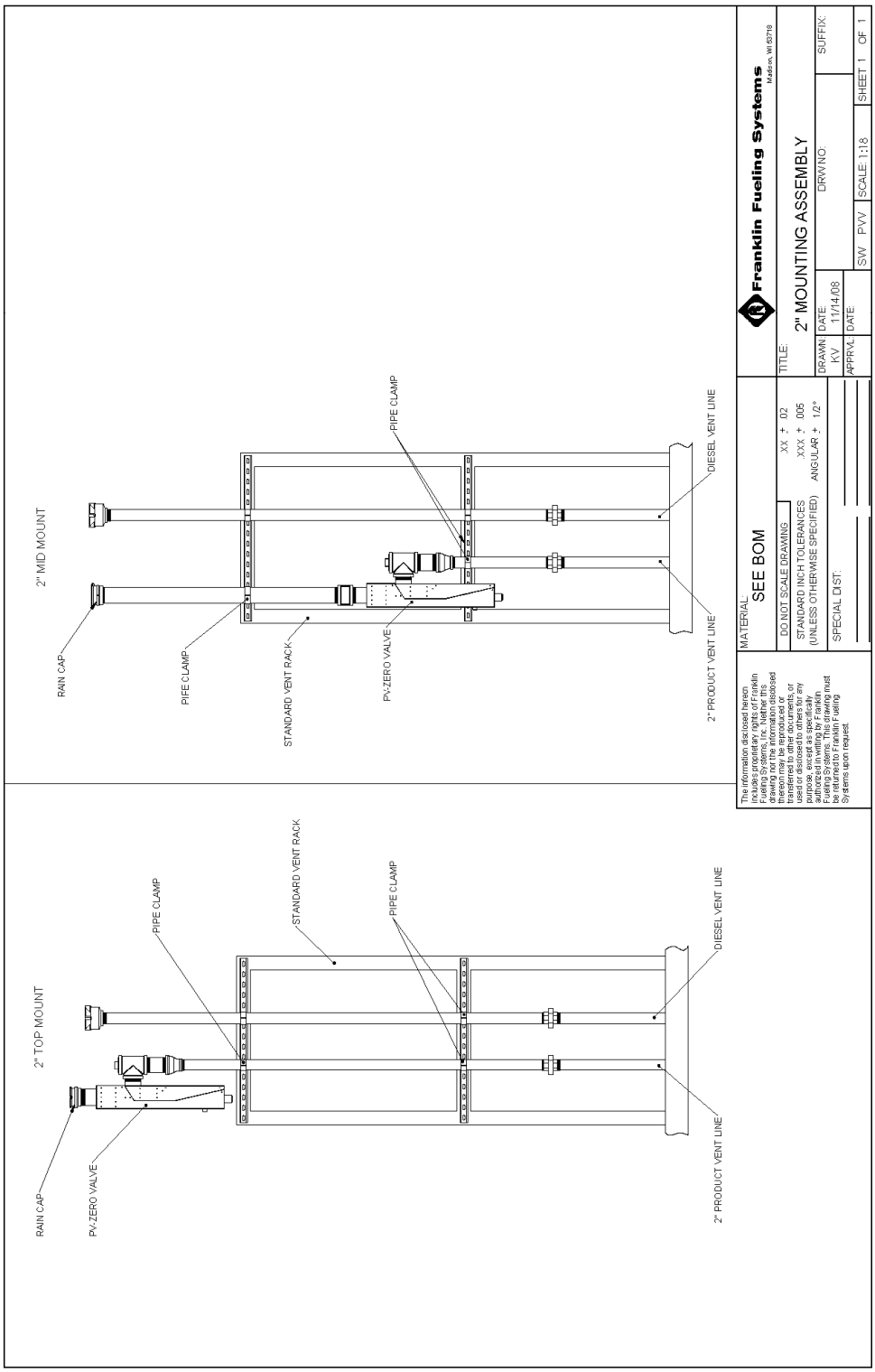
2" MID MOUNT
RAIN CAP
PIPE CLAMP
STANDARD VENT RACK
PV-ZERO VALVE
PIPE CLAMP
2" PRODUCT VENT LINE
DIESEL VENT LINE
2" TOP MOUNT
RAIN CAP
PV-ZERO VALVE
PIPE CLAMP
STANDARD VENT RACK
PIPE CLAMP
2" PRODUCT VENT LINE
DIESEL VENT LINE
The information disclosed hereon includes proprietary rights of Franklin Fueling Systems, Inc. Neither this drawing nor the information disclosed thereon may be reproduced or transferred to other documents, or used or disclosed to others for any purpose except as specifically authorized in writing by Franklin Fueling Systems. This drawing must be returned to Franklin Fueling Systems upon request.
MATERIAL: SEE BOM
DO NOT SCALE DRAWING
STANDARD INCH TOLERANCES (UNLESS OTHERWISE SPECIFIED)
XX ± .02
XXX ± .005
ANGULAR ± 1/2°
SPECIAL DIST:
APPRVL:
DATE
Franklin Fueling Systems
Madison, WI 53718
TITLE:
2" MOUNTING ASSEMBLY
DRAWN: KV
DATE 11/14/08
DRW NO:
SUFFIX:
SW PVV
SCALE: 1:18
SHEET 1 OF 1

Franklin Fueling Systems
www.franklinfueling.com

3760 Marsh Road • Madison, WI 53718, U.S.A.
Tel: +1 608 838 8786 • Fax: +1 608 838 6433
Tel: USA & Canada 1 800 225 9787 • Tel: México 001 800 738 7610

Franklin Fueling Systems GmbH
Rudolf-Diesel-Strasse 20 • 54516 Wittlich, GERMANY
Tel: +49-6571-105-380 • Fax: +49-6571-105-510

©2009 FFS 407232001 Rev 2

Morrison Brothers Tank Gauge Port Components
305XPA & 305XPA1100AKEVR (cap and adaptor kit)
305 & 305-0200AAEVR (replacement adaptor)
305XP & 305XP-110ACEVR (replacement cap)

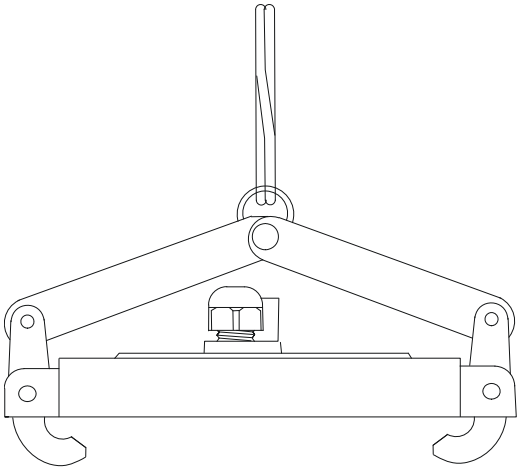

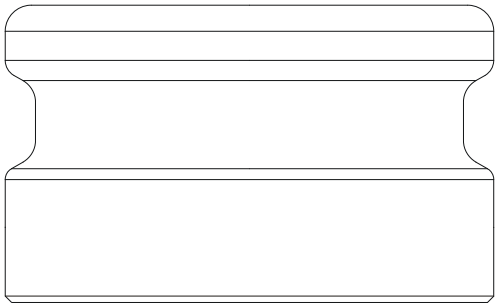

305XP Cap

Installation Instructions –

1. Apply a fuel resistant, non-hardening, anti-seize sealant (not adhesive) to cable connector threads. Follow manufacturer's instructions for installation of monitoring system.
2. Set cap on adapter
3. Push down on lever arms.

305 Adapter

Installation Instructions –

1. Apply a fuel resistant, non-hardening, anti-seize sealant (not adhesive) to body threads.
2. Thread body on to riser pipe. Torque to 23-26 ft.-lb.

Veeder-Root P/N 312020-952 Tank Gauge Cap and Adaptor

Original Identification Method

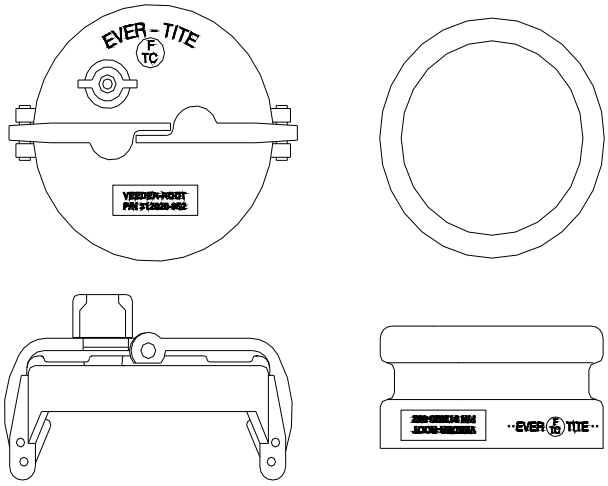

New Identification Method

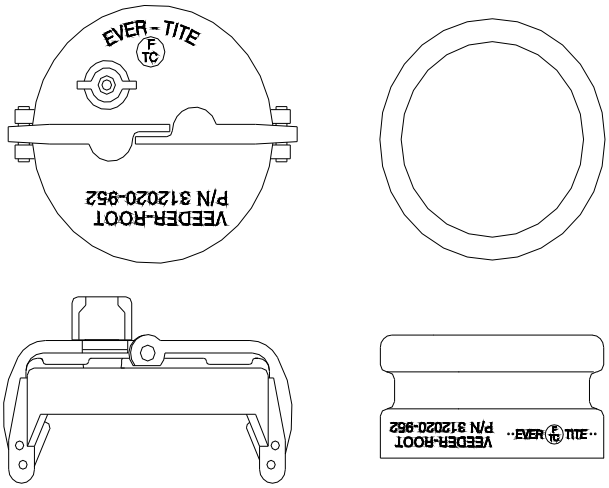

Installation Instructions

Install CARB approved machined adaptor onto the riser. Apply a gasoline-resistant hardening thread sealant to the threads of the riser adaptor only. Next screw the ring from the Veeder-Root kit (P/N 312020-952) onto the riser adaptor by hand until the gasket contacts the sealing surface. Then use a torque wrench attached to an appropriate strap wrench (K-D Specialty tools nylon strap oil filter wrench P/N 3149, or equivalent) and tighten the ring to 35 – 45 ft-lbs. Loosen the cord grip nut and push the cable through the cap and cord grip, then clamp the cap onto the ring.

OPW 62M Monitoring Probe Caps
Installation and Maintenance Instructions

IMPORTANT: Please read these warnings and assembly and use instructions completely and carefully before starting. Failure to do so may cause product failure, or result in environmental contamination due to liquid leakage into the soil, creating hazardous spill conditions.

WARNING-DANGER: Using electrically operated equipment near gasoline or gasoline vapors may result in a fire or explosion, causing personal injury and property damage. Be sure that the working area is free from such hazards, and always use proper precautions.

Notice: FlexWorks by OPW, Inc., VAPORSAVER™ and all other OPW products must be used in compliance with all applicable federal, state, provincial and local laws, rules and regulations. Product selection is the sole responsibility of the customer and/or its agents and must be based on physical specifications and limitations, compatibility with the environment and material to be handled. All illustrations and specifications in this literature are based on the latest production information available at the time of publication. Prices, materials and specifications are subject to change at any time, and models may be discontinued at any time, in either case, without notice or obligation.

This section intentionally left blank.

This section intentionally left blank.

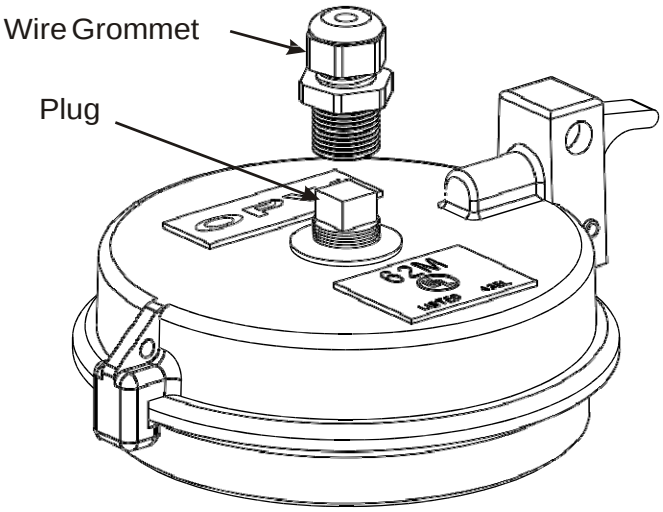

Product

Identification:

Manufacture: "OPW"

Model: "62M"

Date Manufactured (Located on underside of cap): "MFG MMYY"; MM = Month, YY = Year

Installation and Maintenance

1. Install the 62M Monitoring Cap onto a FSA-400(-S) Face Seal Adapter. (Optional) Apply pipe dope to nipple.
2. Tighten Monitoring Cap onto the FSA-400 (-S) adapter with a strap wrench. Torque to 90 ft-lbs to 110 ft-lbs.
3. Remove plug and install wire grommet if needed. Apply gasoline resistant pipe dope to NPT threads.

Torque values:

62M 3/8 NPT Thread and Dome Nut; 40 to 50 in-lbs.

62M 1/2 NPT Thread and Dome Nut; 80 to 90 in-lbs

62M-MA 3/8 NPT Thread: 33 to 40 in-lbs. Dome nut: 22 to 27 in-lbs

62M-MA 1/2 NPT Thread: 44 to 50 in-lbs. Dome nut: 29 to 34 in-lbs.

Maintenance:

Annually inspect O-ring and Gasket seal for nicks, tears or deformations. If required, replace with the following OPW Part Numbers:

Part Number	Description
201954	O-Ring
H09039M	Gasket

This page intentionally left blank.

3250 US 70 Business West
Smithfield, NC 27577
Customer Service:1-(800) 422-2525
Technical Service and Questions:
1-(877) OPW-TECH
www.opwglobal.com