California Environmental Protection Agency

Air Resources Board

ARB Approved

Installation, Operation and Maintenance Manual

For the EBW Phase I Vapor Recovery System
As Certified by Executive Order VR-103-D

NOTICE:

The **ARB Approved Installation, Operation and Maintenance Manual for the EBW Phase I EVR System** describes the tools and methods required to install the EBW Phase I EVR System. Unless specified otherwise, only technicians that are trained and certified by EBW (i.e. EBW Certified Technicians) are able to perform installation, maintenance or repairs of components manufactured by EBW or the warranty will be void. A list of EBW Certified Technicians can be viewed under the at http://www.franklinfueling.com/service/

To schedule a training class, EBW can be contacted at the following:

Stan Brodecki, Allan Busch, or Steve Langlie
Enhanced Vapor Recovery Systems
Franklin Fueling Systems
Phone: 800-225-9787
Email: brodecki@franklinfueling.com
busch@franklinfueling.com
langlie@franklinfueling.com

It is the responsibility of each EBW Certified Technician to be familiar with the current requirements of state, federal and local codes for installation and repair of gasoline dispensing equipment. It is also the responsibility of the EBW Certified Technician to be aware of all necessary safety precautions and site safety requirements to assure a safe and trouble free installation.

Summary of Maintenance Activities Required of the EBW Phase I Vapor Recovery System[1]

Component	Interval	Maintenance To Be Performed
Pressure/Vacuum Vent Valve Husky Model 5885	Annual	1. Remove screws that hold top cover on. 2. Remove any debris that might be sitting inside the lower cover. 3. Check the drain holes in the lower cover for blockage. 4. Do not remove the two (2) screens. 5, Reinstall the top cover and retaining screws. 6. Tighten the screws firmly.
Spill Container Drain Valve EBW "All Models with Drain Valves"	Annual	1. Be sure that no standing liquid is in the container and dispose of properly. 2. Brush all buildup off brass drain valve screen. 3. Remove all dirt and foreign materials. 4. Scrape all foreign materials away from tank lid sealing surfaces. 5. Should it be necessary to replace drain valve due to breakage or considerable contamination build-up, use EBW 705-337-19 Replacement Drain Valves only. 6. Perform leak test using the established "Pressure Integrity Test" for a combination of Drop Tube, Drain Valve and Overfill Prevention Device, TP-201.1D. Use 90079 Drop Tube Isolation Test Kit.
Drop Tubes & Drop Tube Overfill Prevention Device EBW 782-204 EBW 708-45X-01	Annual	1. Inspect inside of drop tube for the presence of a broken dip stick or noticeable damage to the valve flapper. If damage is observed, valve must be replaced. 2. If not already performed during drain valve testing, leak test Drop Tube assembly using established "Pressure Integrity Test" for Drop Tube/Overfill Prevention Device, TP-201.1C or TP-201.1D. **Note: EBW Kit #90079 Isolation Bladder Test Kit must be obtained to perform TP-201.1D. The standard inflatable Plumber's bladder can't be inserted into drop tube. Instructions are included with the 90079 kit.** It is not required by EBW that the drop tube be pulled for inspection unless damage is noted. Should local authority require removal of the drop tube, the following seals and inspection steps are necessary; a. Replace Drop Tube Isolation Gland (if applicable) seal Kit 90090 b. Replace Drop Tube Flange Gasket – 11182-01 c. Inspect Tank Bottom Protector for freedom of movement. Repair or replace if necessary. d. Inspect OPD components, use instructions on EBW form 6329.
Dust Caps EBW 777-201-01 (product) EBW 304-301-0X (vapor)	Annual	Inspect all product and vapor riser dust cap seals for damage. If damage is observed, replace seal. Aluminum Vapor Cap Seal – 304-101-01 Nylon Product Cap Seal – 777-111-01

[1] **These maintenance requirements shall not circumvent use of the manufacturer's installation and maintenance instructions. Maintenance contractors or owner/operators shall refer to the manufacturer's complete installation and maintenance instructions found herein for the EBW Phase I Vapor Recovery System to ensure that all maintenance and torque requirements are met. Maintenance must be conducted within the interval specified from the date of installation and at least within the specified interval thereafter.**

Summary of Maintenance Activities Required of the EBW Phase I Vapor Recovery System[1]

Component	Interval	Maintenance To Be Performed
Vapor Recovery Adaptor Phil-Tite SWV-101-B **Product Fill Adaptor** Phil-Tite SWF-100-B	Annual	Perform established "Static Torque Test", TP-201.1B. **The Phil-Tite rotatable adaptors are not field serviceable with the exception of the vapor poppet or vapor poppet seal found on the SWV-101-B.** 1. Depress the vapor poppet and release. Ensure that the poppet returns to the closed position. This will verify that the spring mechanism is working properly. 2. Test the poppet seal by applying a soap solution to the poppet while the underground storage tank is under a positive gauge pressure of at least 2.00 inches W.C. If the facility continuously operates under vacuum, a bag test may be used. Place a clear plastic bag over the adaptor and make sure it is sealed to the sides of the adaptor. 3. If no bubbles appear at the poppet area under positive pressure or the bag test shows no signs of the bag collapsing, no further maintenance is required. If bubbles appear around the poppet seal or the bag collapsed onto the adaptor, continue with steps 4 through 10 to repair the poppet seal. 4. Remove the SWV-101-B adaptor from the spill container riser using an installation tool (Tool Kit #T-7043-1). 5. Using a screwdriver, hook the snap ring on the inside of the adaptor and remove. 6. After removing the snap ring, remove the brass spider, spring and vapor poppet through the bottom of the adaptor. 7. With the vapor poppet removed inspect the poppet and poppet seal for cuts, tears or damage. Replace if necessary. 8. Reassemble the vapor poppet spring and brass spider in the reverse order from which they were removed. 9. Replace the snap ring and actuate the poppet by hand, making sure the assembly is secure and actuates properly. 10. Reinstall and properly torque the SWV-101-B using the provided installation and maintenance instructions. 11. Re-test the poppet seal as described in steps 2 and 3.

[1] **These maintenance requirements shall not circumvent use of the manufacturer's installation and maintenance instructions. Maintenance contractors or owner/operators shall refer to the manufacturer's complete installation and maintenance instructions found herein for the EBW Phase I Vapor Recovery System to ensure that all maintenance and torque requirements are met. Maintenance must be conducted within the interval specified from the date of installation and at least within the specified interval thereafter.**

Table of Contents

EBW Installation and Maintenance Manual

Equipment	Manufacturer/Model Number	Figure
Typical Installation (Product Side)		**A-1**
Typical Installation (Vapor Side)		**A-2**
Spill Containers and Covers	**EBW 7XX-49Y-0Z** XX indicates spill bucket gallon size: 05 = 5 Gallon 15 = 15 Gallon 25 = 25 Gallon Y indicates level and base material: 0 = grade level with cast iron base 1 = grade level with composite base 2 = below grade level with cast iron base 3 = below grade level with composite base 4 = below grade level with cast iron base 15 gallon stainless container only 5 = below grade level with composite base 15 gallon stainless container only Z indicates lid type and drain valve: 1 = raintite lid, drain valve 2 = raintite lid, no drain valve 3 = watertite lid, drain valve 4 = watertite lid, no drain valve	**B-1, B-2**
Replacement Drain Valve Kit	**EBW 705-337-19**	**C-1**
Drain Valve Security Blank Kit	**EBW 90089**	**C-2**
Drain Valve Blank Test Kit	**EBW 90022**	**C-3**
Dust Caps	**EBW 777-201-01** (product) **EBW 304-301-0X** (vapor) X indicates presence of safety chain: 1 = no chain 2 = with chain	**D-1**
Product Adaptor	**Phil-Tite SWF-100-B**	**E-1**
Vapor Adaptor	**Phil-Tite SWV-101-B**	**E-1**
Drop Tube	**EBW 782-204** (various lengths)	**F-1**
Drop Tube Overfill Prevention Device[2]	**EBW 708-45X-01** X indicates presence of and length of drop tube and may be 0,1,2 or 3.	**F-2**
Drain Valve Isolation Kit	**EBW 708-255-01**	**F-3**

Table of Contents (continued)

Drop Tube Isolation Test Kit	**EBW**	**90079**	**F-4**
Tank Bottom Protector[2]	**EBW**	**785-400-01**	**F-5**
Tank Gauge Port Adaptor and Cap			
	EBW	**90037 (Kit)**	**G-1**
	EBW	**90038 (Kit)**	
Pressure/Vacuum Vent Valve	**Husky**	**5885**	**H-1**
Spill Containment EVR Upgrade Kits			
	EBW	**90087 (product)**	**J-1**
	EBW	**90088 (vapor)**	
Epoxy Sealant	**EBW**	**11372-01**	**K-1**
EBW Required Maintenance	**EBW**	**Form 6308**	**L-1**
EBW Warranty Tag	**EBW**	**Form 8352**	**M-1**

[2] If these components are installed or required by regulations of other agencies, only those components and model numbers specified above shall be installed or used.

Figure A-1

Typical Product Installation Using EBW System

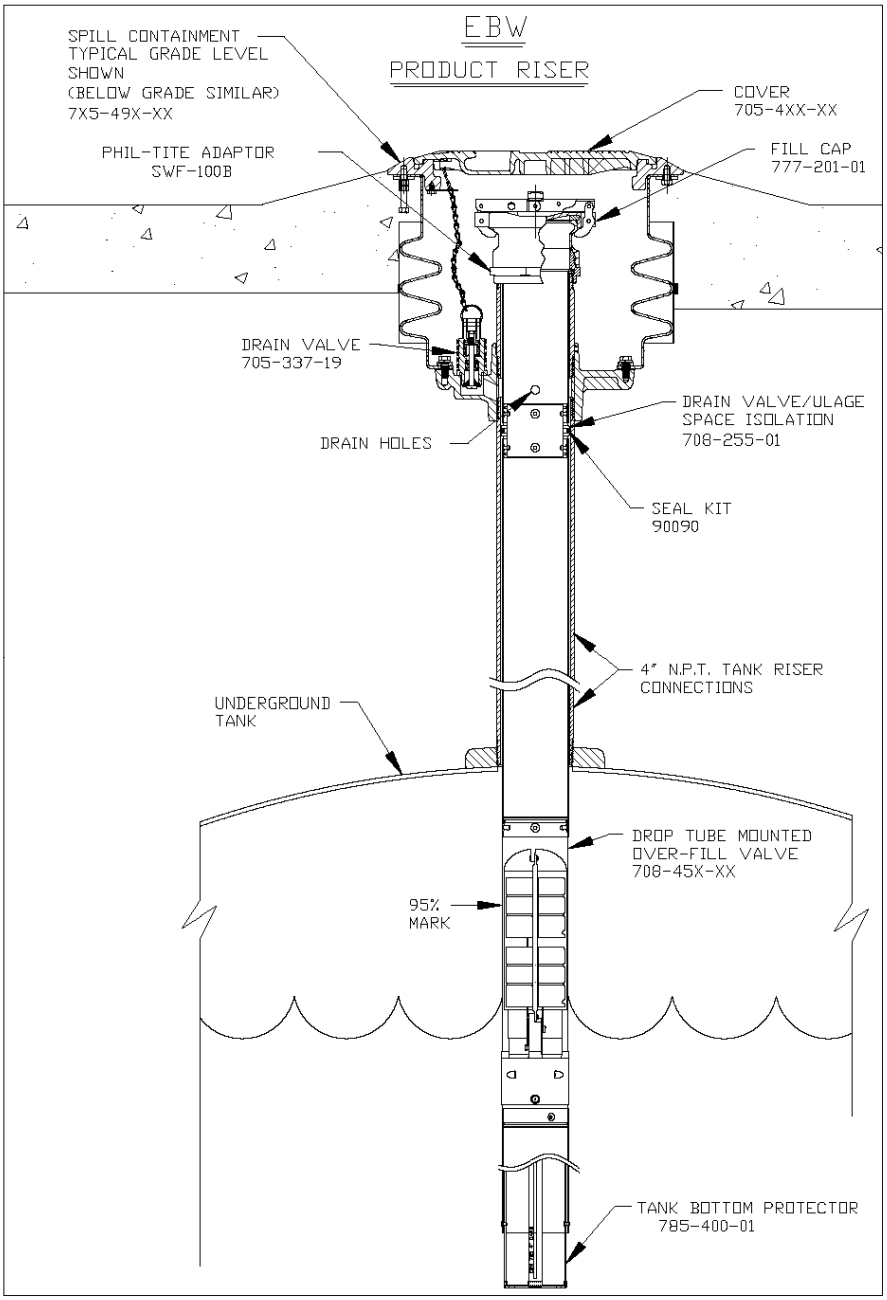

Figure A-2

Typical Vapor Recovery Installation Using EBW System
(Extractors and ball floats are optional equipment)

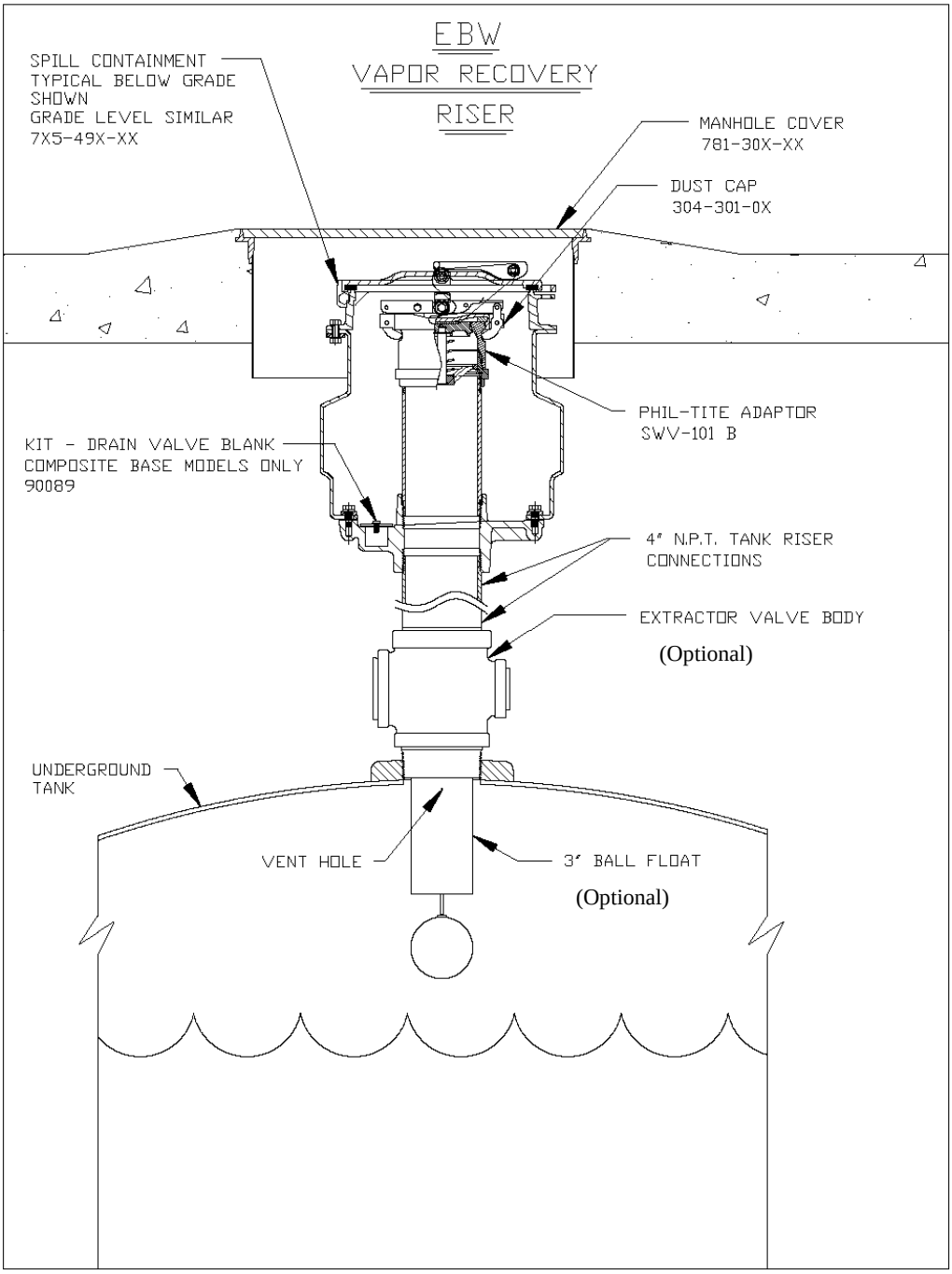

Figure B-1

Grade Level Spill Containers and Covers for EBW System

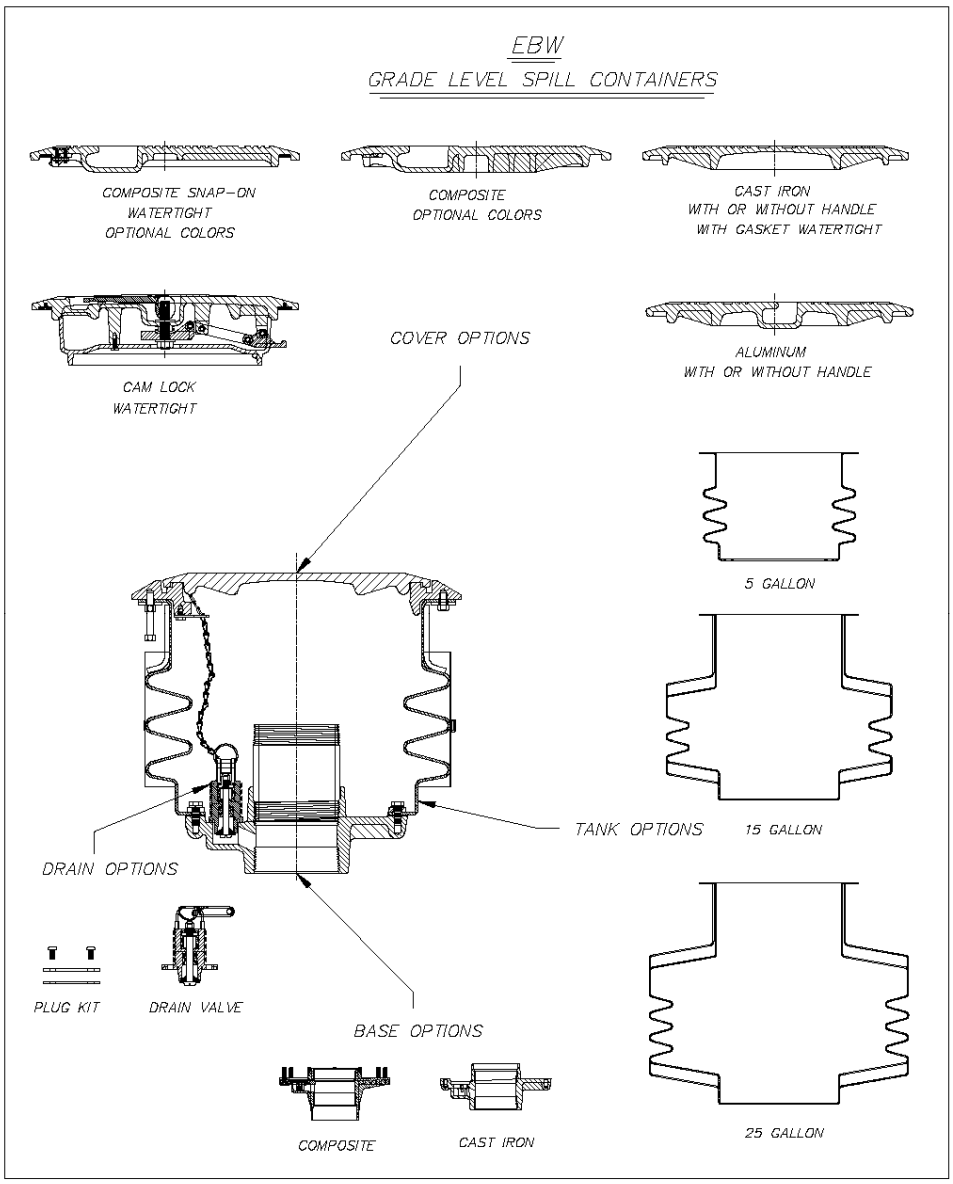

GRADE LEVEL

Spill Containment Manholes

Installation Instructions

705 - 5 GAL. / 715 - 15 GAL. / 725 - 25 GAL.

WARNING Application and use of this product should be in compliance of local, state, and federal regulations. Selection of this product should be based on physical specifications, limitations and compatibility with the environment and material to be handled. EBW makes no warranty of fitness for a particular use.

Sales Desk (800) 475-3291 • **Sales Fax** (800) 475-4329 • **Phone** (231) 755-1671

2814 McCracken Avenue, Muskegon, MI 49441 • **Fax** (231) 755-7201 • www.ebw.com

Franklin Fueling Systems

©2003 EBW Inc. Form No 1307 10/03

Part No.	Size	Base	Covers	Drain	Replacement Drain valve kit	Fig
705-458-01	5 Gal.	CI	Raintight	No Drain	90022	A
705-470-01	5 Gal.	CI	Raintight	Pull to Push	705-332-19	A
705-470-21	5 Gal.	CI	Raintight	Pull to Push	705-332-19	A
705-471-01	5 Gal.	Comp	Raintight	Pull to Push	705-332-19	A
705-471-21	5 Gal.	Comp	Raintight	Pull to Push	705-332-19	A
705-472-01	5 Gal.	CI	Snap-on	Pull to Push	705-332-19	A
705-472-65	5 Gal.	CI	Snap-on	Pull to Push	705-332-19	A
705-473-01	5 Gal.	Comp	Snap-on	Pull to Push	705-332-19	A
705-473-65	5 Gal.	Comp	Snap-on	Pull to Push	705-332-19	A
705-478-EX	5 Gal.	Comp	Raintight	Pull to Push	705-337-01	A
715-470-01	15 Gal.	CI	Raintight	Pull to Push	705-332-19	B
715-471-01	15 Gal.	Comp	Raintight	Pull to Push	705-332-19	B
715-472-01	15 Gal.	CI	Snap-on	Pull to Push	705-332-19	B
715-472-65	15 Gal.	CI	Snap-on	Pull to Push	705-332-19	B
715-473-01	15 Gal.	Comp	Snap-on	Pull to Push	705-332-19	B
715-473-65	15 Gal.	Comp	Snap-on	Pull to Push	705-332-19	B
725-425-555	25 Gal.	CI	Raintight	Automatic	705-120-01	C
725-470-01	25 Gal.	CI	Raintight	Pull to Push	705-332-19	C
725-471-01	25 Gal.	Comp	Raintight	Pull to Push	705-332-19	C
725-472-01	25 Gal.	CI	Snap-on	Pull to Push	705-332-19	C
725-472-65	25 Gal.	CI	Snap-on	Pull to Push	705-332-19	C
725-473-01	25 Gal.	Comp	Snap-on	Pull to Push	705-332-19	C
725-473-65	25 Gal.	Comp	Snap-on	Pull to Push	705-332-19	C

ARB approved EVR components are listed on page 7.

The following items may be ordered separately:

Test Drain Kit (no drain) #90022 for models withpull to push drains and push drains.

Replacement Drain Valves for models with Pull Drains

705-336-01	(5 GAL.)	B.G. & G.L.
705-336-02	(15 GAL.)	B.G. & G.L.
705-336-03	(25 GAL.)	B.G.
705-336-04	(25 GAL.)	G.L.

Conversion Drain Valve Kit for Models with Push Drains Order Conversion Kit 705-332-99

715-472 Models:

The 715-472 (15 Gallon) spill containment has been assigned the certificate of approval number (5021) by the New York City Fire Department, and its installation and use is subject to the following conditions and pursuant to 27-4015 of the New York City Bureau of Fire Prevention Code.

1) The installation and use of these Below Grade Spill Containment Manholes (Fill Boxes) shall comply with all applicable requirements of New York Fire Prevention Code, Fire Prevention Rules Building Code, 40 CFR Part 280.20 and 280.30 pertinent to 27-4065-F of New York City Fire Prevention Code.

2) Prior to use, all installations shall be subject to inspection by the Bureau of Fire Prevention which may result in added requirements being imposed.

GRADE LEVEL SPILL CONTAINMENT MANHOLES

705, 715, 725-GL (5, 15, & 25 Gallon) ***Flex*** Catch™

INSTALLATION INSTRUCTIONS : PLEASE READ BEFORE INSTALLING

Before installing Flex Catch, coat all riser pipe threads with a thread sealant that is compatible with the product to be contained.

Install Flex Catch by threading onto tank riser pipe until hand-tight. Caution: Do not use upper cast iron ring to fully tighten Flex Catch. Tightening the tank using the upper cast iron ring can cause undue stress to the entire unit.

After hand tightening,place a torque wrench assembly around lower portion of tank base and torque spill bucket base on a riser pipe to 60-90 ft. lb. torque. (Use EBW 901-101-01 chain wrench and a torque wrench with at least 100 ft. lb. torque range. Due to off-set of chain and torque wrenches, actual torque wrench values will be 45 to 70 ft. lbs.) After initial torque value is obtained, continue to thread tank base onto riser pipe until drain valve is orientated to the riser low spot. (see note).
Note: All tank risers have some out of plumb characteristics due to slight tank tilts and rolls. To properly drain, the drain valve must be located at the low spot of the riser tilt. Riser low spot is the direction the riser pipe is leaning to. This is easily obtained by placing a small amount of water in the bucket base and turning bucket until water completely runs to the drain valve.

If space is limited (ie: Retrofit installation to a sawed out section of concrete) :

1) Make sure that the inside riser pipe is removed.
2) Locate the fitting that the inside riser pipe threads into.
3) Coming down through the top of the unit, use a special socket wrench on the octagonal surface of that fitting to finish tightening. Do not disassemble unit.

- Top edge of rim must be positioned a minimum of 2" above driveway level to provide an adequate slope for drainage.
- To raise Flex Catch tank height and hold in place, use the 11-3/4" x 1-3/4" x 3/4" wood block that is shipped with each tank. Insert it underneath the cast lugs located inside the tank on the iron ring, and add shims between that and the adaptor for desired height. **(SEE FIGURE "A" FOR 5 GALLON & FIGURE "B" FOR 15 & FIGURE "C" FOR 25 GALLON)**
- If Flex Catch needs to be lowered, then add weight to the top of the lid to hold down in place.

CAUTION: These adjustments will allow only up to 1-1/2" of movement up or down for final grade adjustment. If more adjustment is needed, then a shorter or longer riser pipe must be used between the underground storage tank and the base of the Flex Catch.

- Before pouring cement, place duct tape around the rim, this will keep the cement out of the drainage grooves when the lid is in place. See figure D. After cement has solidified, remove duct tape and any excess cement.
  Note : TEST DRAIN KIT 90022-01 ***(to seal off drain)***.

CHECK FOR LEAKS

Every unit should be tested for leaks prior to, and after pouring the concrete. If this model comes with a drain, close it. If not, install 90022-01 test drain kit. Fill the unit completely with water. If the test water level drops at all within one hour, then a leak exists. Note: this is not an EVR test.

Check to see that the drain valve is seating properly. If not, **PULL** the drain valve several times on a **PULL TO PUSH DRAIN UNIT**. Replace the valve if it continues to leak.

If the unit continues to leak, the entire spill container should be removed from the riser pipe and replaced with another. RE-TEST.

After the concrete has been poured, RE-TEST to make sure that no damage occurred during installation.

Figure A **5 Gallon**

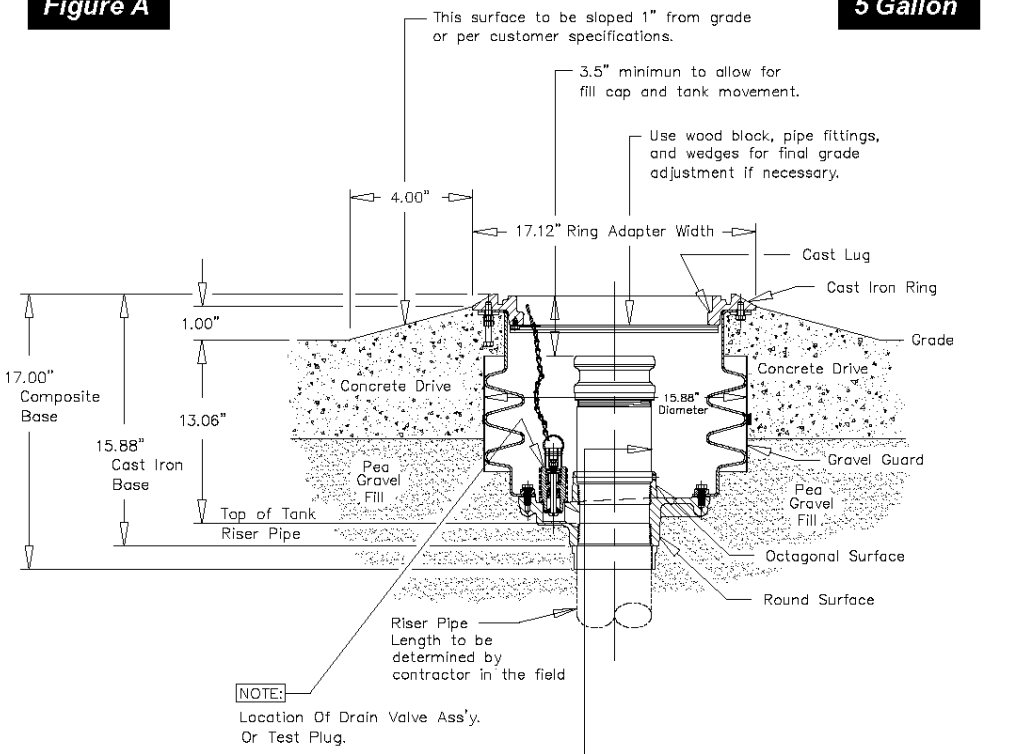

RECOMMENDED INSIDE RISER PIPE LENGTHS FOR:

5 GALLON

5" – FOR CONVENTIONAL TOP AND SIDE SEAL ADAPTORS (EBW 776 & 778)
4" – FOR SWIVEL TYPE PRODUCT ADAPTORS AND CONVENTIONAL COAXIAL ADAPTORS (EBW 778 & 306)
3" – FOR SWIVEL TYPE POPPETED VAPOR ADAPTORS AND SELF-SEALING COAXIAL POPPETED ADAPTORS (EBW 300 & 306 CA)

Figure D

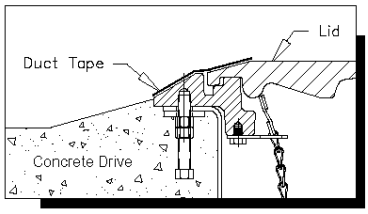

The above figures may contain components (including part numbers) that have not been certified by the California Air Resources Board (ARB)for a specific Phase I Vapor Recovery System. Please refer to Exhibit 1 of the appropriate CARB Phase I Executive Order for a list of Phase I Vapor Recovery System Equipment.

Figure B **15 Gallon**

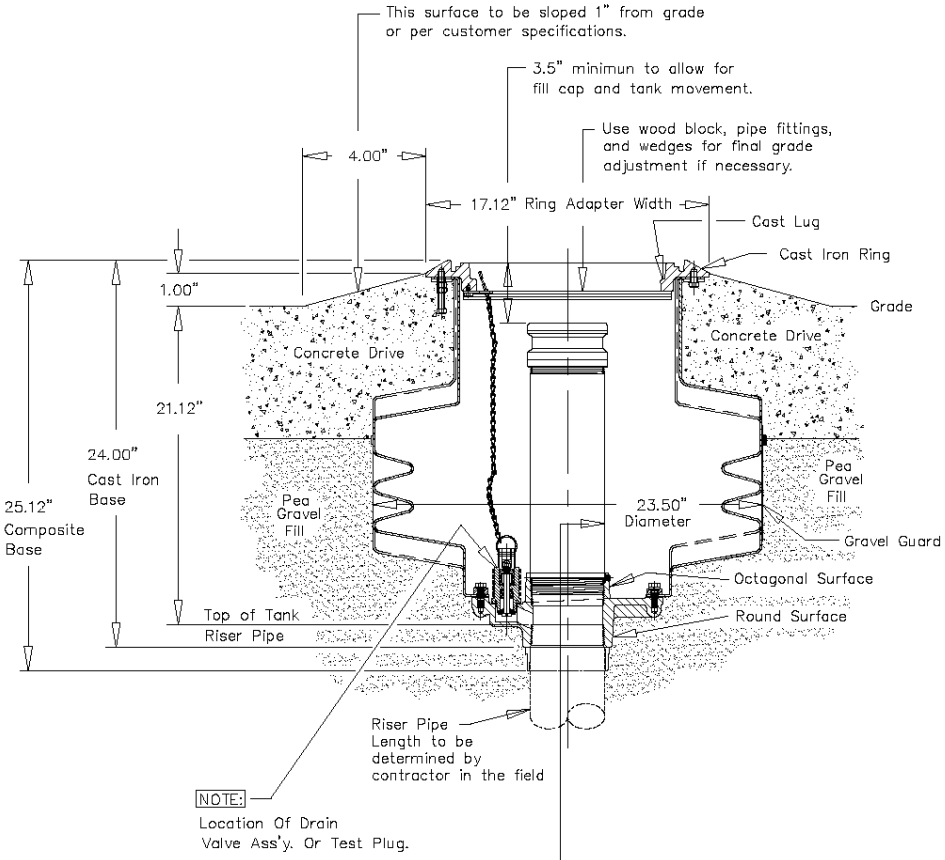

RECOMMENDED INSIDE RISER PIPE LENGTHS FOR:

15 GALLON

12 1/4" – FOR CONVENTIONAL TOP AND SIDE SEAL ADAPTORS (EBW 776 & 778)
11 1/4" – FOR SWIVEL TYPE PRODUCT ADAPTORS AND CONVENTIONAL COAXIAL ADAPTORS (EBW 778 & 306)
10 1/4" – FOR SWIVEL TYPE POPPETED VAPOR ADAPTORS AND SELF-SEALING COAXIAL POPPETED ADAPTORS (EBW 300 & 306 CA)

The above figures may contain components (including part numbers) that have not been certified by the California Air Resources Board (ARB)for a specific Phase I Vapor Recovery System. Please refer to Exhibit 1 of the appropriate CARB Phase I Executive Order for a list of Phase I Vapor Recovery System Equipment.

Figure C **25 Gallon**

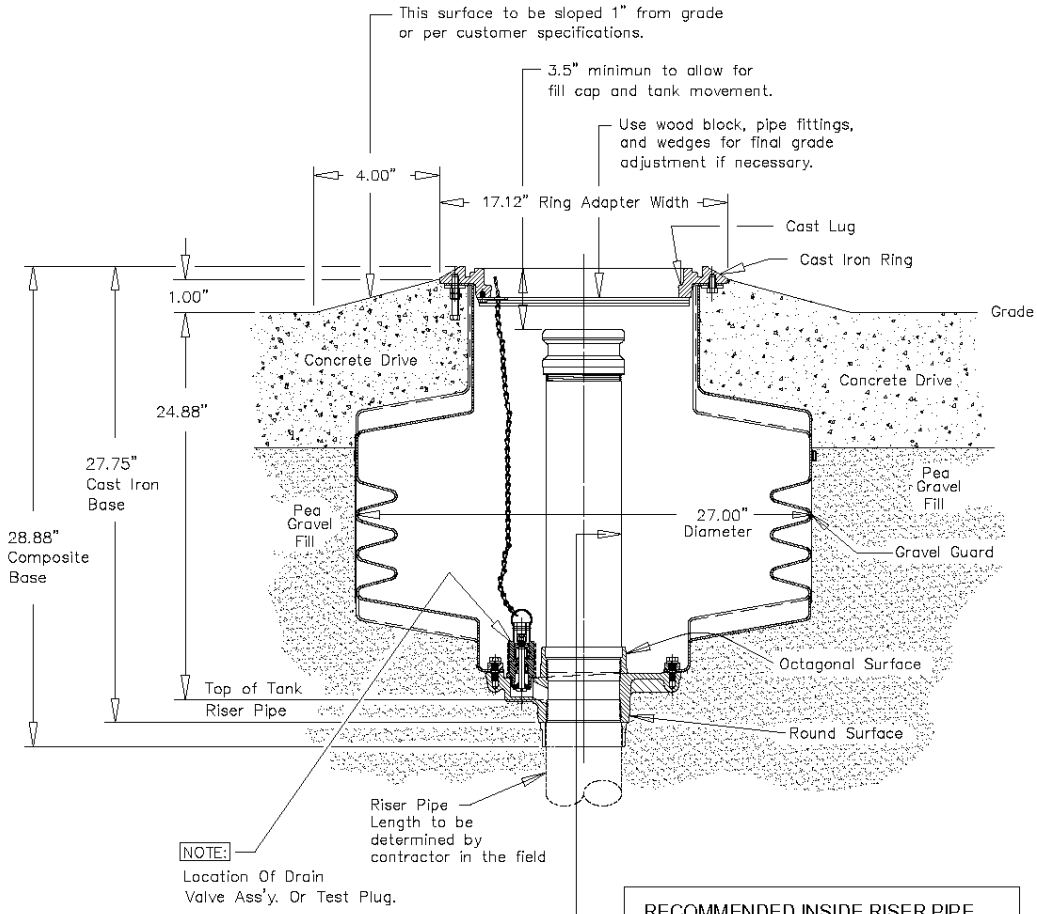

RECOMMENDED INSIDE RISER PIPE LENGTHS FOR:

25 GALLON

16" – FOR CONVENTIONAL TOP AND SIDE SEAL ADAPTORS (EBW 776 & 778)
15" – FOR SWIVEL TYPE PRODUCT ADAPTORS AND CONVENTIONAL COAXIAL ADAPTORS (EBW 778 & 306)
14" – FOR SWIVEL TYPE POPPETED VAPOR ADAPTORS AND SELF-SEALING COAXIAL POPPETED ADAPTORS (EBW 300 & 306 CA)

The above figures may contain components (including part numbers) that have not been certified by the California Air Resources Board (ARB)for a specific Phase I Vapor Recovery System. Please refer to Exhibit 1 of the appropriate CARB Phase I Executive Order for a list of Phase I Vapor Recovery System Equipment.

C.A.R.B. Approved Grade Level Spill Containers

PART NO.	SIZE	BASE	COVERS	DRAIN	REPLACEMENT DRAIN VALVE	FIG.
705-490-01	5 GAL.	CI	RAINTIGHT	PULL TO PUSH	705-337-19	A
705-490-02	5 GAL.	CI	RAINTIGHT	NO DRAIN		A
705-490-03	5 GAL.	CI	WATERTIGHT	PULL TO PUSH	705-337-19	A
705-490-04	5 GAL.	CI	WATERTIGHT	NO DRAIN		A
705-491-01	5 GAL.	COMP.	RAINTIGHT	PULL TO PUSH	705-337-19	A
705-491-02	5 GAL.	COMP.	RAINTIGHT	NO DRAIN		A
705-491-03	5 GAL.	COMP.	WATERTIGHT	PULL TO PUSH	705-337-19	A
705-491-04	5 GAL.	COMP.	WATERTIGHT	NO DRAIN		A
715-490-01	15 GAL	CI	RAINTIGHT	PULL TO PUSH	705-337-19	B
715-490-02	15 GAL.	CI	RAINTIGHT	NO DRAIN		B
715-490-03	15 GAL.	CI	WATERTIGHT	PULL TO PUSH	705-337-19	B
715-490-04	15 GAL.	CI	WATERTIGHT	NO DRAIN		B
715-491-01	15 GAL.	COMP.	RAINTIGHT	PULL TO PUSH	705-337-19	B
715-491-02	15 GAL.	COMP.	RAINTIGHT	NO DRAIN		B
715-491-03	15 GAL.	COMP.	WATERTIGHT	PULL TO PUSH	705-337-19	B
715-491-04	15 GAL.	COMP.	WATERTIGHT	NO DRAIN		B
725-490-01	25 GAL	CI	RAINTIGHT	PULL TO PUSH	705-337-19	C
725-490-02	25 GAL.	CI	RAINTIGHT	NO DRAIN		C
725-490-03	25 GAL.	CI	WATERTIGHT	PULL TO PUSH	705-337-19	C
725-490-04	25 GAL.	CI	WATERTIGHT	NO DRAIN		C
725-491-01	25 GAL.	COMP.	RAINTIGHT	PULL TO PUSH	705-337-19	C
725-491-02	25 GAL.	COMP.	RAINTIGHT	NO DRAIN		C
725-491-03	25 GAL.	COMP.	WATERTIGHT	PULL TO PUSH	705-337-19	C
725-491-04	25 GAL.	COMP.	WATERTIGHT	NO DRAIN		C

Drain Valve Leak Rate < 0.17 CFH @ 2.00" w.c.

Recommended Maintenance & Inspection Procedures

At least once a month, the following maintenance and inspection actions are recommended.

1. Clean/remove any build-up of sand, gravel or dirt from the spill container top cast flange. Build-up of material will prevent the tank cover from setting flat and diverting rain water. In addition to water infiltration, this can lead to premature cover failures and tripping hazards.
2. Inspect spill container cover gasket & replace if necessary (If applicable)
3. Inspect spill container for presence of liquid. If present, identify material (water and/or fuel) & dispose of using your preferred acceptable method (pump out or drain into tank)
4. Inspect spill container and drain valve screen for any foreign material collecting in the tank bottom. Remove any large objects (leaves, rags, etc.) and wipe tank bottom with a disposable rag.
5. Inspect tank riser adapter & dust cap for obvious damage. Verify that gasket is in dust cap and that the dust cap still securely latches onto the adapter.

Post Installation Inspection Procedure

After installing these spill containers and prior to back filling the excavation, it is recommended that the tank system be checked for potential leaks. In CA, utilize TP-201.3, Static Pressure Test Procedure. In other areas, utilize this or a locally approved/accepted pressure test procedure. Should a leak be present, tank & spill container piping joints, drain valve poppet & gasket, permanent drain blank plate gasket and adapter piping joint can be tested with an acceptable leak check fluid. ***REPAIR ALL LEAKS PRIOR TO BACKFILLING***

Installation Instructions for Composite Base Spill Containment

Before installing Spill Containment Manholes, apply Teflon® thread sealant tape clockwise around the riser pipe threads.

Align the composite Base on the riser pipe. ***(FIGURE A)***

Rotate the spill containment counter clockwise until the threads mesh (you can feel the unit drop into place), then rotate clockwise until it is hand tight.

CAUTION:
Do not use upper cast iron ring to fully tighten spill containment. Tightening the tank using the upper cast iron ring can cause undue stress to the entire unit.

To finish tightening, refer to page 3 for torque specifications. ***(FIGURE B)***

Continue with the standard Instructions for setting top rim to driveway grade level.

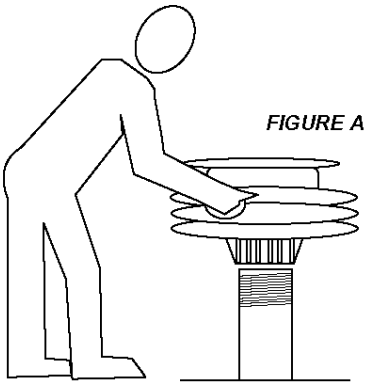

FIGURE A

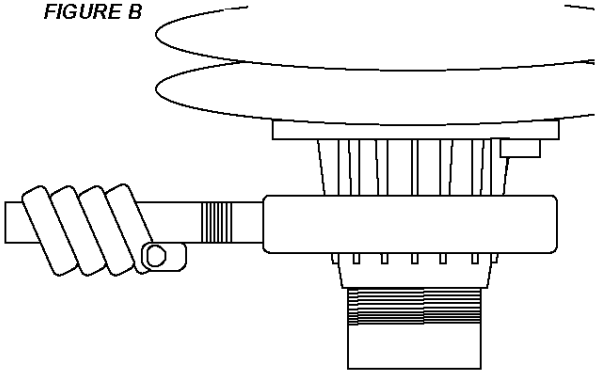

FIGURE B

Sales Desk (800) 475-3291 • **Sales Fax** (800) 475-4329 • **Phone** (231) 755-1671
2814 McCracken Avenue, Muskegon, MI 49441 • **Fax** (231) 755-7201 • www.ebw.com
Franklin Fueling Systems
©2003 EBW Inc. Form No 1307 10/03

Figure B-2

Below Grade Spill Containment for EBW System

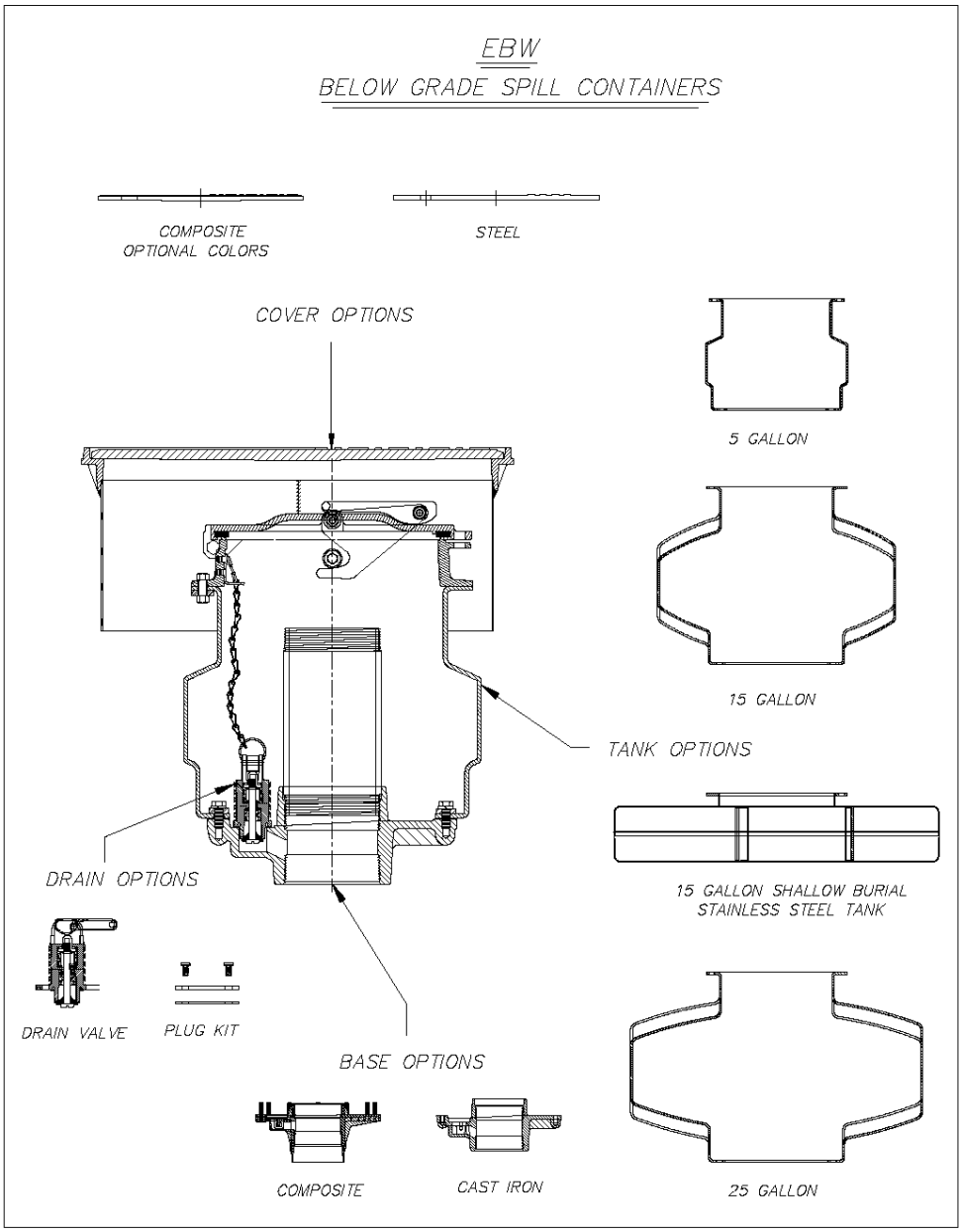

BELOW GRADE

Spill Containment Manholes

Installation Instructions

5, 15, and 25 Gallon Models

WARNING: Application and use of this product should be in compliance of local, state, and federal regulations. Selection of this product should be based on physical specifications, limitations and compatibility with the environment and material to be handled. EBW makes no warranty of fitness for a particular use.

Sales Desk (800) 475-3291 • **Sales Fax** (800) 475-4329 • **Phone** (231) 755-1671
2814 McCracken Avenue, Muskegon, MI 49441 • **Fax** (231) 755-7201 • www.ebw.com
Franklin Fueling Systems
©2003 EBW Inc. Form No 1306 10/03

Part No.	Size	Base	Drain	Replacement Drain valve kit	Fig
705-445-01	5 Gal.	Cast Iron	Cover Actuated Push Drain	705-225-02	A
705-445-65	5 Gal.	Cast Iron	Cover Actuated Push Drain	705-225-02	A
705-450-01	5 Gal.	Cast Iron	Auto-Drain	705-120-01	A
705-455-01	5 Gal.	Cast Iron	Cover Actuated Push Drain	705-225-02	A
705-457-01	5 Gal.	Cast Iron	Auto-Drain	705-120-01	A
705-474-01	5 Gal.	Cast Iron	Pull to Push	705-332-19	A
705-474-65	5 Gal.	Cast Iron	Pull to Push	705-332-19	A
705-475-01	5 Gal.	Composite	Pull to Push	705-332-19	A
705-475-65	5 Gal.	Composite	Pull to Push	705-332-19	A
705-438-06	15 Gal.	Cast Iron	Auto-Drain	705-120-01	C
715-446-01	15 Gal.	Cast Iron	Cover Actuated Push Drain	705-225-01	C
715-446-65	15 Gal.	Cast Iron	Cover Actuated Push Drain	705-225-01	C
715-456-01	15 Gal.	Cast Iron	Cover Actuated Push Drain	705-225-01	C
715-474-01	15 Gal.	Cast Iron	Pull to Push	705-332-19	C
715-474-65	15 Gal.	Cast Iron	Pull to Push	705-332-19	C
715-475-01	15 Gal.	Composite	Pull to Push	705-332-19	C
715-475-65	15 Gal.	Composite	Pull to Push	705-332-19	C
725-447-01	25 Gal.	Cast Iron	Cover Actuated Push Drain	705-225-03	E
725-474-01	25 Gal.	Cast Iron	Pull to Push	705-332-19	E
725-474-65	25 Gal.	Cast Iron	Pull to Push	705-332-19	E
725-475-01	25 Gal.	Composite	Pull to Push	705-332-19	E
725-475-65	25 Gal.	Composite	Pull to Push	705-332-19	E

ARB approved EVR components are listed on page 7.

The following items may be ordered separately:

Test Drain Kit (no drain) #90022 for models with pull to push drains and push drains.

REPLACEMENT DRAIN VALVES FOR MODELS WITH PULL DRAINS

705-336-01	(5 GAL.)	B.G. & G.L.
705-336-02	(15 GAL.)	B.G. & G.L.
705-336-03	(25 GAL.)	B.G.
705-336-04	(25 GAL.)	G.L.

Conversion Drain Valve Kit for Models with Push Drains Order Conversion Kit 705-332-99

Notice For New York City Approval

715-474 Models:

The 715-474 (15 Gallon) spill containment has been assigned the certificate of approval number (5021) by the New York City Fire Department, and its installation and use is subject to the following conditions and pursuant to 27-4015 of the New York City Bureau of Fire Prevention Code.

1) The installation and use of these Below Grade Spill Containment Manholes (Fill Boxes) shall comply with all applicable requirements of New York Fire Prevention Code, Fire Prevention Rules Building Code, 40 CFR Part 280.20 and 280.30 pertinent to 27-4065-F of New York City Fire Prevention Code.

2) Prior to use, all installations shall be subject to inspection by the Bureau of Fire Prevention which may result in added requirements being imposed.

BELOW GRADE SPILL CONTAINMENT MANHOLES

705, 715, 725 -BG (5,15, & 25 Gallon) ***Flex-Catch***™ Spill Containment Manholes

INSTALLATION INSTRUCTIONS

PLEASE READ BEFORE INSTALLING

Before installing Flex Catch, coat all riser pipe threads with a thread sealant that is compatible with the product to be contained.

Install Flex Catch by threading onto tank riser pipe until hand-tight.
Caution: Do not use upper cast iron ring to fully tighten Flex Catch. Tightening the tank using the upper cast iron ring can cause undue stress to the entire unit.

After hand tightening, place a torque wrench assembly around lower portion of tank base and torque spill bucket base on riser pipe to 60 - 90 ft. lb. torque. (Use EBW 901-101-01 chain wrench and a torque wrench with at least a 100 ft. lb. torque range. Due to off-set of chain and torque wrenches, actual torque values will be 45 to 70 ft. lbs.) After initial torque is obtained, continue to thread tank base onto riser pipe until drain is orientated to the riser low spot (see note).
NOTE: All tank risers have some out of plumb characteristics due to slight tank tilts and rolls. To properly drain, the drain valve must be located at the low spot of the riser tilt. Riser low spot is the direction the riser pipe is leaning to. This is easily obtained by placing a small amount of water in the bucket base and turning bucket until water completely runs to the drain valve.

If space is limited (ie: Retrofit installation to a sawed out section of concrete) :

1) Make sure that the inside riser pipe is removed.
2) Locate the fitting that the inside riser pipe threads into.
3) Coming down through the top of the unit, use a special socket wrench on the octagonal surface of that fitting to finish tightening. Do not disassemble unit.

Styrofoam Locator (705-417) See figure B
NOTE: Use for installation. **DO NOT DISCARD!**
After Installation is complete, **Remove locator from Manhole.**

CHECK FOR LEAKS

Every unit should be tested for leaks prior to, and after pouring the concrete. If this model comes with a drain, close it. Fill the unit completely with water, if the test water level drops at all within one hour, then a leak exists. Note: this is not an EVR test.

Check to see that the drain valve is seating properly. If not, then **PULL** the drain valve several times **ON A PULL DRAIN OR PULL TO PUSH DRAIN UNIT.** Replace the valve if it continues to leak.

If the unit continues to leak, the entire spill container must be removed from the riser pipe and replaced with another. **RE-TEST**.

After back filling with pea gravel and pouring concrete, **RE-TEST** to make sure that no damage occurred during installation.

Figure A **5 Gallon**

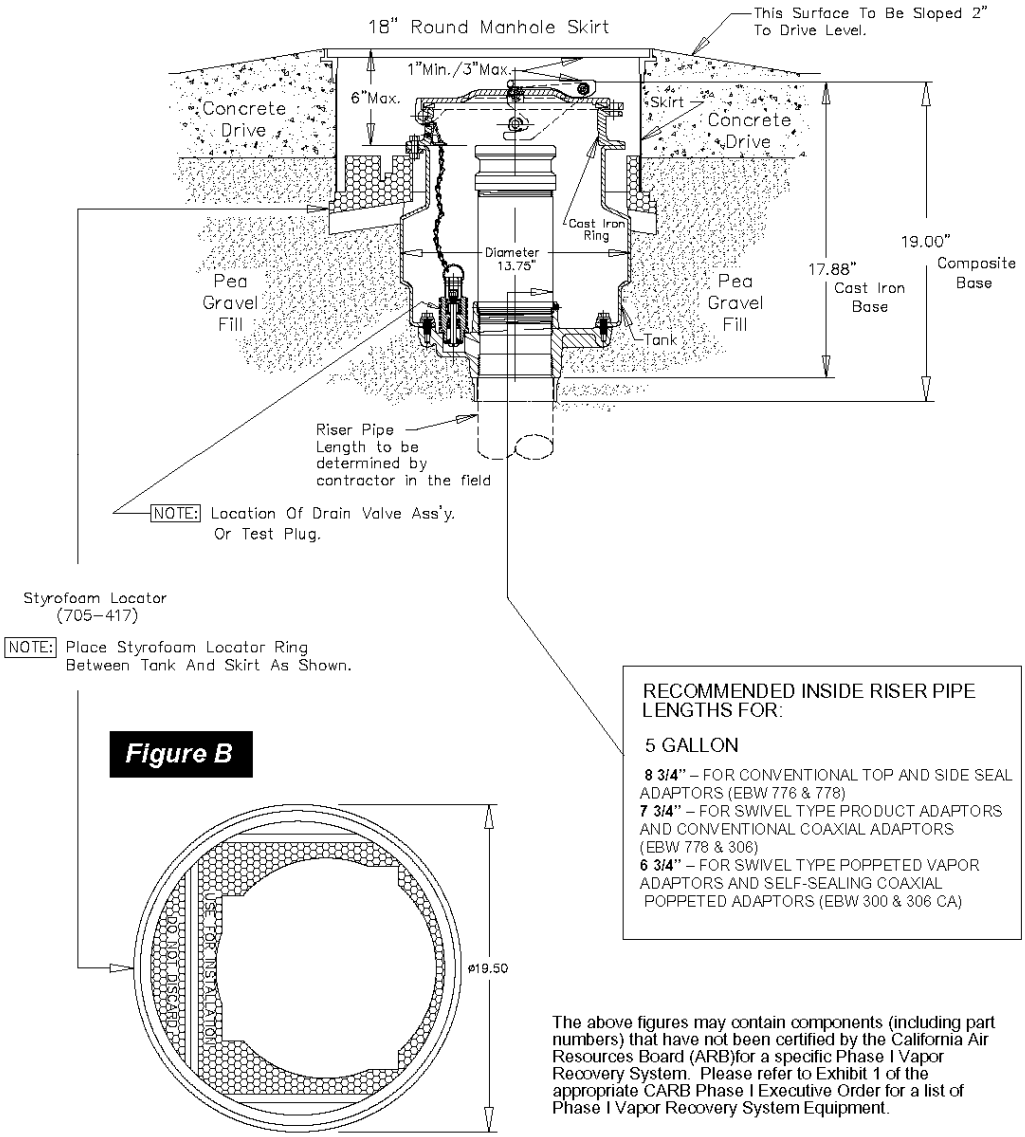

Figure B

The above figures may contain components (including part numbers) that have not been certified by the California Air Resources Board (ARB)for a specific Phase I Vapor Recovery System. Please refer to Exhibit 1 of the appropriate CARB Phase I Executive Order for a list of Phase I Vapor Recovery System Equipment.

Figure C **15 Gallon**

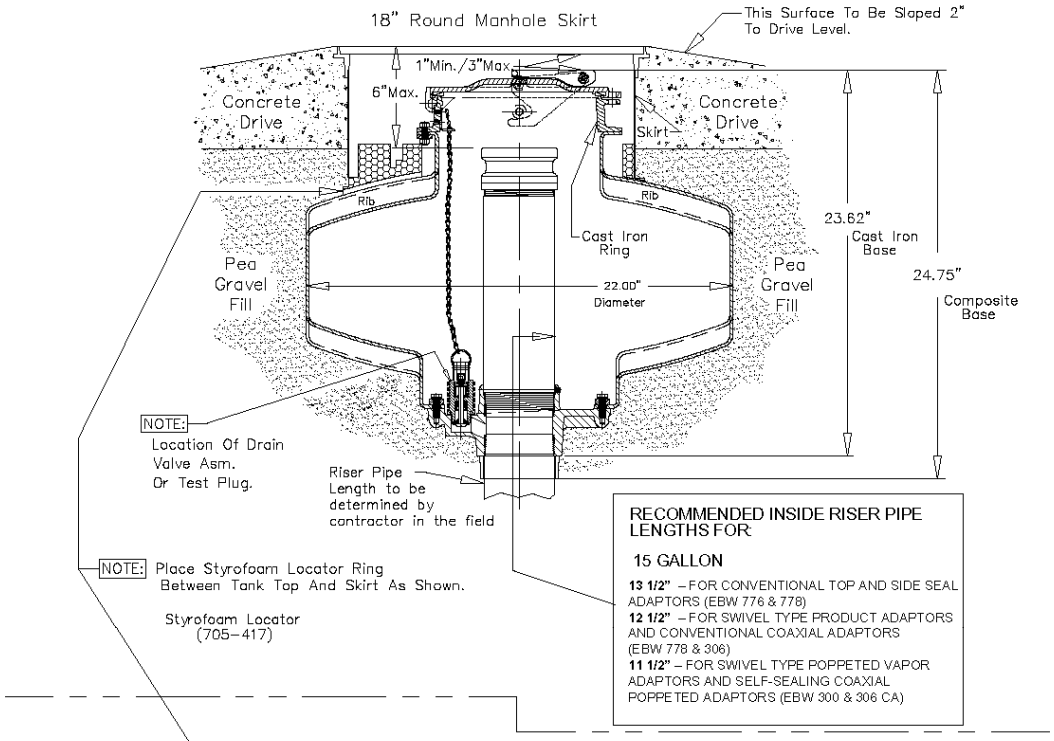

Figure D

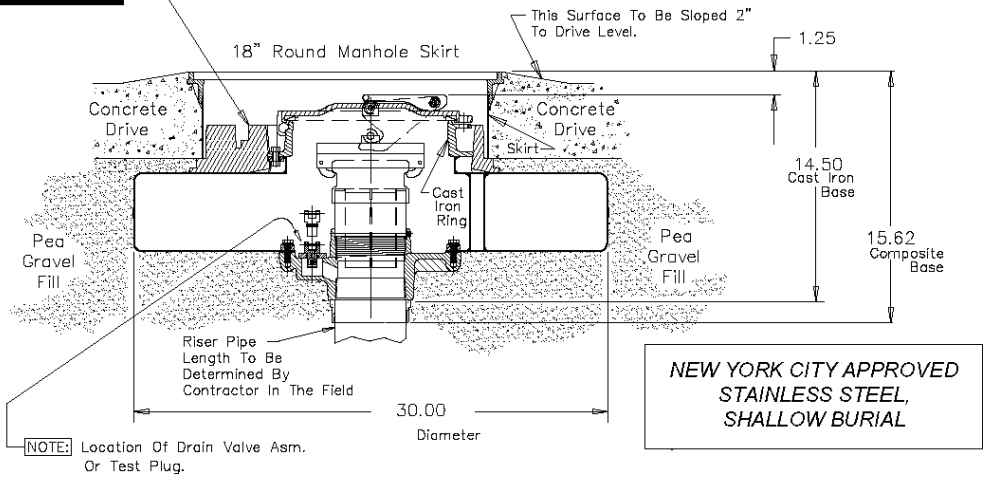

The above figures may contain components (including part numbers) that have not been certified by the California Air Resources Board (ARB)for a specific Phase I Vapor Recovery System. Please refer to Exhibit 1 of the appropriate CARB Phase I Executive Order for a list of Phase I Vapor Recovery System Equipment.

Figure E **25 Gallon**

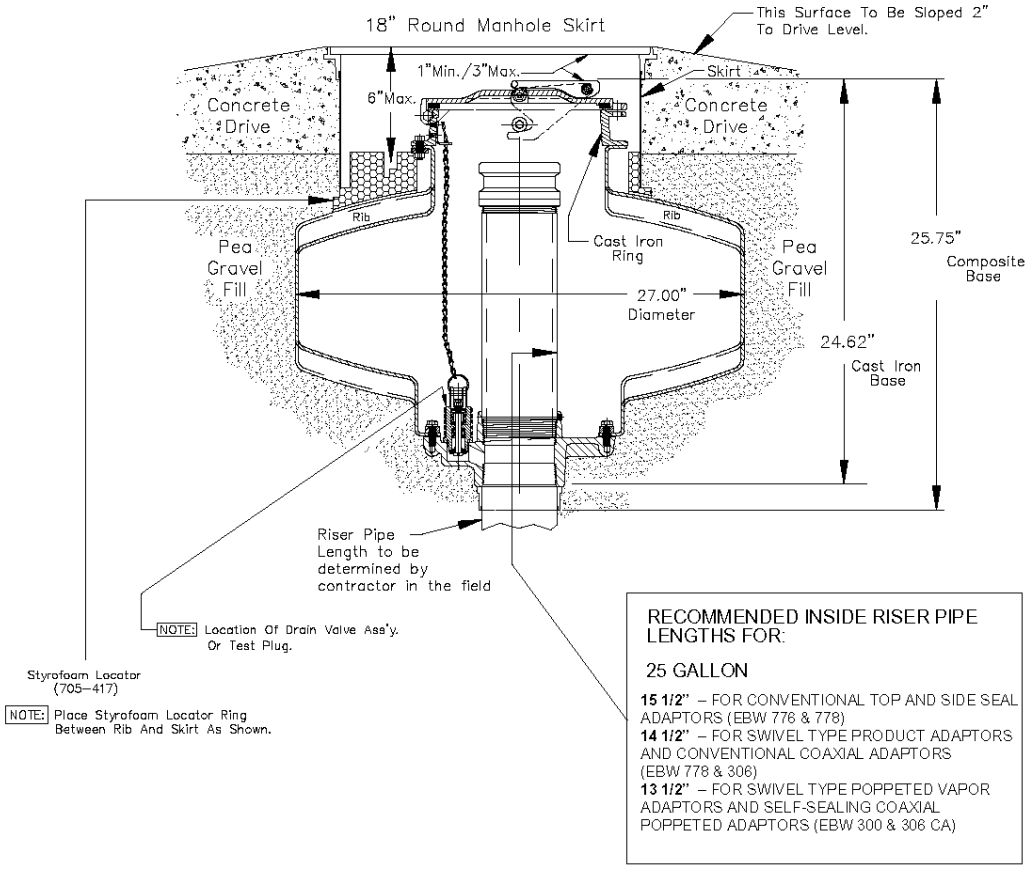

The above figures may contain components (including part numbers) that have not been certified by the California Air Resources Board (ARB)for a specific Phase I Vapor Recovery System. Please refer to Exhibit 1 of the appropriate CARB Phase I Executive Order for a list of Phase I Vapor Recovery System Equipment.

C.A.R.B. Approved Below Grade Spill Containers

PART NO.	SIZE	BASE	DRAIN	REPLACEMENT DRAIN VALVE	FIG.
705-492-01	5 GAL.	CAST IRON	PULL TO PUSH	705-337-19	A
705-492-02	5 GAL.	CAST IRON	NO DRAIN		A
705-493-01	5 GAL.	COMPOSITE	PULL TO PUSH	705-337-19	A
705-493-02	5 GAL.	COMPOSITE	NO DRAIN		A
715-492-01	15 GAL.	CAST IRON	PULL TO PUSH	705-337-19	C
715-492-02	15 GAL.	CAST IRON	NO DRAIN		C
715-493-01	15 GAL.	COMPOSITE	PULL TO PUSH	705-337-19	C
715-493-02	15 GAL.	COMPOSITE	NO DRAIN		C
715-494-01	15 GAL.	CAST IRON	PULL TO PUSH	705-337-19	C
715-494-02	15 GAL.	CAST IRON	NO DRAIN		C
715-495-01	15 GAL.	COMPOSITE	PULL TO PUSH	705-337-19	C
715-495-02	15 GAL.	COMPOSITE	NO DRAIN		C
725-492-01	25 GAL	CAST IRON	PULL TO PUSH	705-337-19	E
725-492-02	25 GAL.	CAST IRON	NO DRAIN		E
725-493-01	25 GAL.	COMPOSITE	PULL TO PUSH	705-337-19	E
725-493-02	25 GAL.	COMPOSITE	NO DRAIN		E

Drain Valve Leak Rate < 0.17 CFH @ 2.00" w.c.

Recommended Maintenance & Inspection Procedures

At least once a month, the following maintenance and inspection actions are recommended.
1. Clean/remove any build-up of sand, gravel or dirt from the manhole top cast flange. Build-up of material will prevent the manhole lid from setting flat and diverting rain water. In addition to water infiltration, this can lead to premature lid failures and tripping hazards.
2. Inspect spill container latching mechanism for proper operation
3. Inspect hinged cover gasket & replace if necessary
4. Inspect spill container for presence of liquid. If present, identify material (water and/or fuel) & dispose of using your preferred acceptable method (pump out or drain into tank)
5. Inspect spill container and drain valve screen for any foreign material collecting in the tank bottom. Remove any large objects (leaves, rags, etc.) and wipe tank bottom with a disposable rag.
6. Inspect tank riser adapter & dust cap for obvious damage. Verify that gasket is in dust cap and that the dust cap still securely latches onto the adapter.

Post Installation Inspection Procedure

After installing these spill containers and prior to back filling the excavation, it is recommended that the tank system be checked for potential leaks. In CA, utilize TP-201.3, Static Pressure Test Procedure. In other areas, utilize this or a locally approved/accepted pressure test procedure. Should a leak be present, tank & spill container piping joints, drain valve poppet & gasket, permanent drain blank plate gasket and adapter piping joint can be tested with an acceptable leak check fluid. REPAIR ALL LEAKS PRIOR TO BACKFILLING

Installation Instructions for Composite Base Spill Containment

Before installing Spill Containment Manholes, apply Teflon® thread sealant tape clockwise around the riser pipe threads.

Align the composite Base on the riser pipe. ***(FIGURE A)***

Rotate the spill containment counter clockwise until the threads mesh (you can feel the unit drop into place), then rotate clockwise until it is hand tight.

CAUTION:
Do not use upper cast iron ring to fully tighten spill containment. Tightening the tank using the upper cast iron ring can cause undue stress to the entire unit.

To finish tightening, refer to page 3 for torque specifications. ***(FIGURE B)***

Continue with the standard Instructions for setting top rim to driveway grade level.

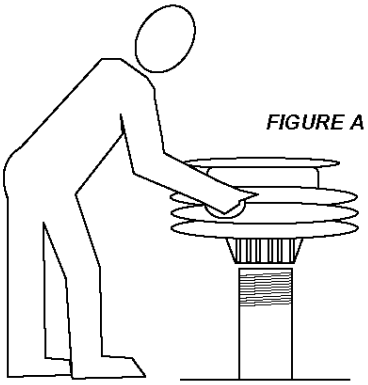

FIGURE A

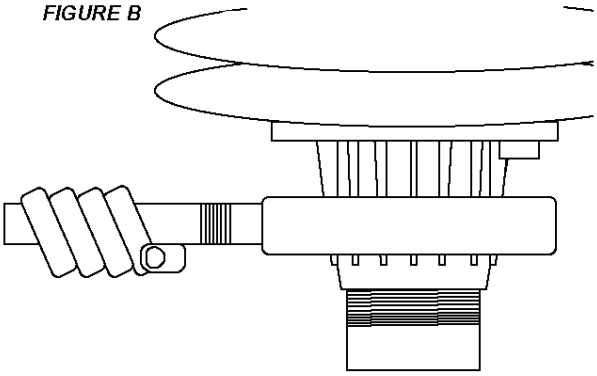

FIGURE B

Sales Desk (800) 475-3291 • **Sales Fax** (800) 475-4329 • **Phone** (231) 755-1671
2814 McCracken Avenue, Muskegon, MI 49441 • **Fax** (231) 755-7201 • www.ebw.com
Franklin Fueling Systems
©2003 EBW Inc. Form No 1306 10/03

Figure C-1

Replacement Drain Valve Kit

INSTALLATION INSTRUCTIONS
705-337-19 Kit Valve Replacement

NEW PULL TO PUSH DRAIN ASSEMBLY (VAPOR TIGHT STYLE)

This Kit Is For ***New Vapor Tight Drains*** Manufactured After March 1, 2001

For C.A.R.B. Approved Spill Containers- All Models with Drain Valves

1. REMOVE EXISTING VALVE ASSEMBLY AND GASKET.
2. REPLACE WITH NEW DRAIN ASSEMBLY (ITEM 1).
3. USE THE NEW GASKET (ITEM 2) PROVIDED IN THIS KIT.

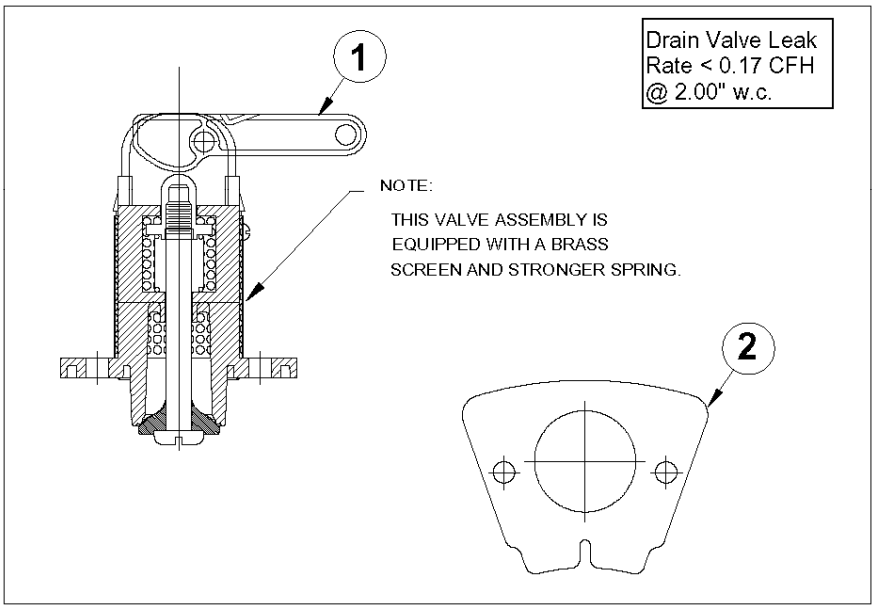

Torque 1/4" x 20 screws to 50 - 75 in. lb. torque. Use a suitable torque wrench and a 5/32" hex driver.

Sales Desk (800) 475-3291 • **Sales Fax** (800) 475-4329 • **Phone** (231) 755-1671
2814 McCracken Avenue, Muskegon, MI 49441 • **Fax** (231) 755-7201 • www.ebw.com
Franklin Fueling Systems
©2001 EBW Inc. Form No 6304 10/03

Figure C-2

Drain Valve Security Blank Kit

90089 Permanent Drain Blank Kit
(C.A.R.B. Version)

NEW TANK ASSEMBLIES
705, 715, & 725 MODELS

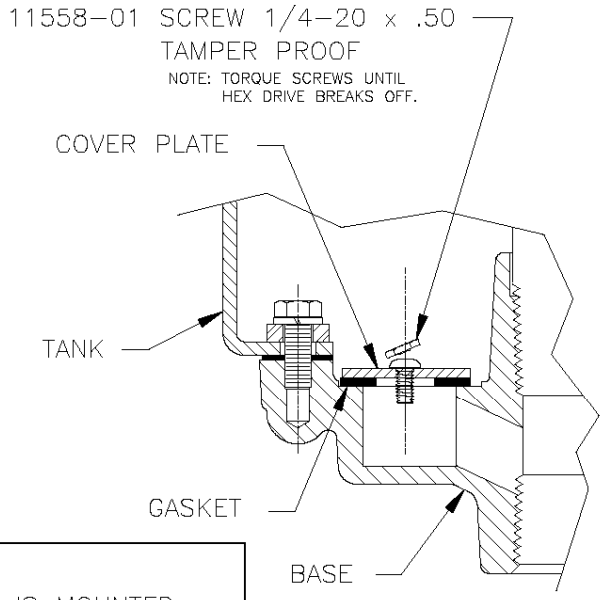

NOTE:
COVER PLATE IS MOUNTED
IN RECESS DIRECTLY TO BASE.

Sales Desk (800) 475-3291 • **Sales Fax** (800) 475-4329 • **Phone** (231) 755-1671
2814 McCracken Avenue, Muskegon, MI 49441 • **Fax** (231) 755-7201 • www.ebw.com
Franklin Fueling Systems
©2003 EBW Inc. Form No 6220 5/03

Figure C-3

Drain Valve Blank Test Kit

90022 Blank and Test Drain Kit

OLD STYLE TANK ASSEMBLIES

705, 715, & 725 MODELS

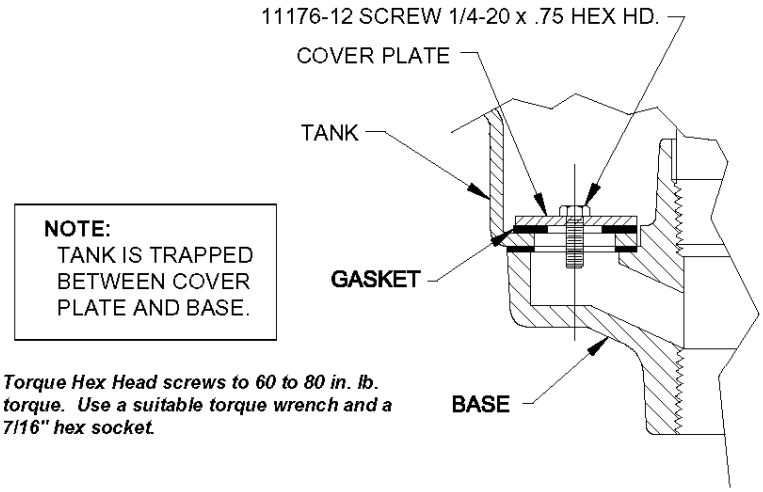

NOTE:
TANK IS TRAPPED BETWEEN COVER PLATE AND BASE.

Torque Hex Head screws to 60 to 80 in. lb. torque. Use a suitable torque wrench and a 7/16" hex socket.

REDESIGNED TANK ASSEMBLIES

705, 715, & 725 MODELS

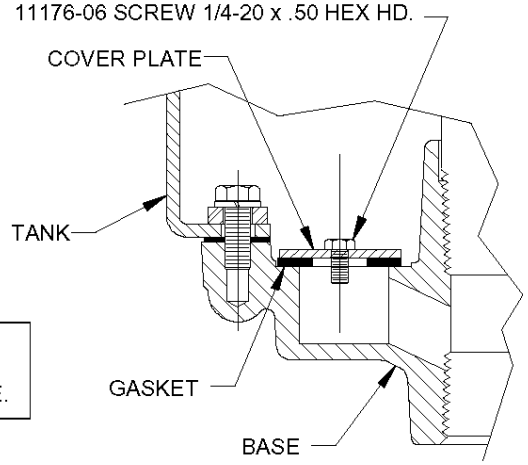

NOTE:
COVER PLATE IS MOUNTED IN RECESS DIRECTLY TO BASE.

Sales Desk (800) 475-3291 • **Sales Fax** (800) 475-4329 • **Phone** (231) 755-1671
2814 McCracken Avenue, Muskegon, MI 49441 • **Fax** (231) 755-7201 • www.ebw.com
Franklin Fueling Systems
©2003 EBW Inc. Form No 6220 5/03

Figure D-1

Product and Vapor Dust Caps

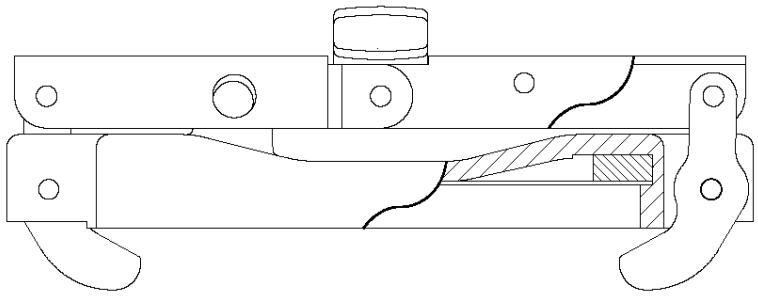

777-201-01 COVER ASS'Y. FILL ADAPTOR

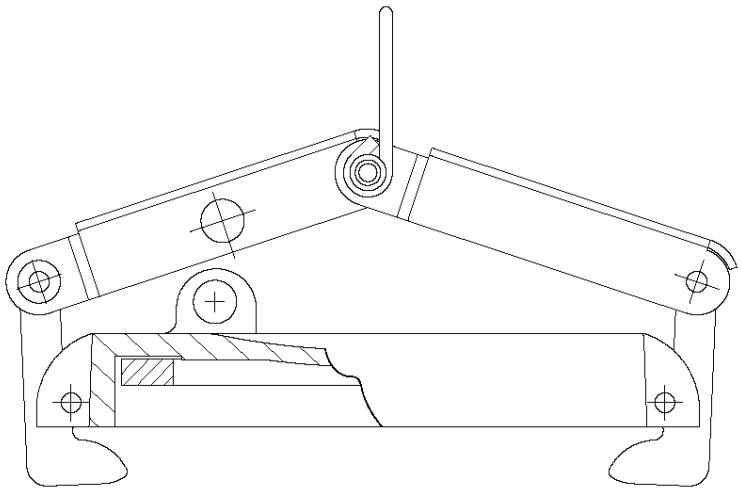

304-301-01 COVER ASS'Y. VAPOR RECOVERY ADAPTOR

Figure E-1

Phil-Tite SWF-100-B Rotatable Product Adaptor and Phil-Tite SWV-101-B Rotatable Vapor Adaptor

Product

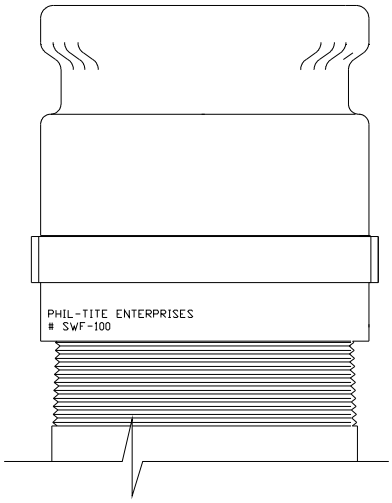

Vapor Recovery

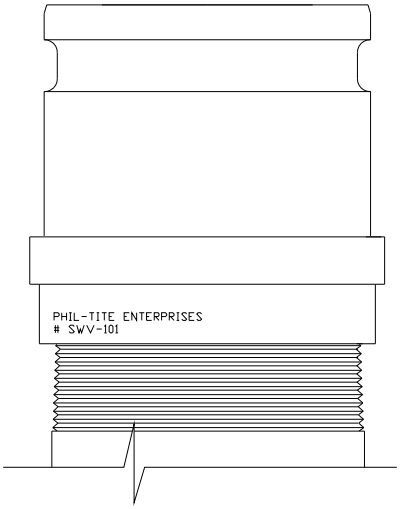

PHIL-TITE ROTATABLE ADAPTORS

Phil-Tite Rotatable Adaptors are designed to produce a free turning, 360 degree rotation of a fuel delivery elbow which prevents the adaptors from loosening or overtightening on the spill container riser which prevents leaks into the environment.

INSTALLATION INSTRUCTIONS:

1) Remove the adaptor from the box and inspect for shipping damage. Ensure that the adaptor seal is in place and is free from damage or defects. SWV-101-B Only, ensure that the vapor poppet opens and closes freely by actuating the poppet by hand.

2) DO NOT USE ANY TYPE OF THREAD SEALANT ON THE ADAPTOR OR IT'S MATING THREADS! Phil-Tite adaptors are designed to create a leak free seal when properly tightened as described in item #4.

3) By hand, thread the adaptor onto the spill container riser taking care not to cross thread.

4) Using a torque wrench and an adaptor installation tool (Phil-Tite Tool Kit #T-7043-1), tighten to a torque value between the range of 50 and 75 ft. lbs.

5) Once properly tightened, install a compatible dust cap. The adaptors are ready for operation.

THE USE OF UNAPPROVED TOOLS, OR IMPROPERLY TORQUING OF THE SPILL CONTAINER WILL VOID ANY AND ALL APPLIED WARRANTIES.

PLEASE CONTACT PHIL-TITE ENTERPRISES FOR A SCHEDULE OF "HOW-TO" CLASSES OFFERED FOR THE INSTALLATION OR REPAIR OF ALL PHIL-TITE PRODUCTS.

MAINTENANCE INSTRUCTIONS:
(annually)

The Phil-Tite rotatable adaptors are not field serviceable with the exception of the vapor poppet or poppet components found on the SWV-101-B Rotatable Vapor Recovery Adaptor.

1) Depress the vapor poppet and release. Ensure that the poppet returns to the closed position. This will verify that the spring mechanism is working properly.
2) Test the poppet seal by applying a soap solution to the poppet while the underground storage tank is under a positive gauge pressure of at least 2.00 inches W.C.
If the facility continuously operates under vacuum, a bag test may be used. Place a clear plastic bag over the adaptor and make sure it is tightly sealed to the sides of the adaptor.
3) If no bubbles appear at the poppet area under positive pressure or the bag test shows no signs of the bag collapsing, no further maintenance is required. If bubbles appear around the poppet seal or the bag collapsed, continue with steps 3 through 10 to repair the poppet or poppet seal.
4) Remove the SWV-101-B adaptor from the spill container riser using an installation tool (Phil-Tite Tool Kit #T-7043-1).
5) Using a screwdriver, hook the snap ring on the inside of the adaptor and remove.
6) After removing the snap ring, remove the brass spider, spring and vapor poppet through the bottom of the adaptor.
7) With the vapor poppet removed inspect the poppet and poppet seal for cuts, tears or damage. Replace if necessary.
8) Reassemble the vapor poppet spring and brass spider in the reverse order from which they were removed.
9) Replace the snap ring and actuate the poppet by hand, making sure the assembly moves freely and closes when released.
10) Reinstall and properly torque the SWV-101-B using the provided installation and maintenance instructions.
11) Re-test the poppet seal as described in steps 1 in 2.

Figure-E-1, Page 2

Phil-Tite Enterprises, Inc.
3732 Electro Way
Redding, CA 96002
Phone - 530-223-7400
Fax - 530-223-7418

WARRANTY

This product is warranted by Phil-Tite Enterprises, Inc. against defective material and workmanship for 1 (one) year from installation date. We will repair/replace, as we deem necessary, product that has been verified defective by a representative of our company. Any damage caused by either freight or wrongful installation are not covered under this warranty. This warranty does not cover normal wear, or force majeure - caused by fire, flood, earthquake, explosion, war, or acts of God. Seals and O-rings are not a warranty item. Warranty is null and void if a) item is disassembled, b) item is installed improperly, or c) warranty label has been tampered with or is removed from product.

Expiration Date:_____

Serial Number:_____

Model Number:_____

Mfg. Number:_____

TO BE FILLED OUT BY INSTALLER AT THE TIME OF INSTALLATION

This Card MUST be returned for Warranty to be honored

Date of Installation:_____

Installation Company:_____

Address:_____

_____

Telephone: ( )_____

Facility Name:_____

Address:_____

_____

_____

Please detach here, fill out completely, and promptly mail back to Phil-Tite Enterprises.

_____

_____

_____

Place Stamp Here

Phil-Tite Enterprises, Inc.
3732 Electro Way
Redding, CA 96002

OWNERS COPY
TO BE RETAINED ON-SITE WITH FACILITY OWNER

Phil-Tite Enterprises, Inc.
3732 Electro Way
Redding, CA 96002
Phone - 530-223-7400
Fax - 530-223-7418

WARRANTY

This product is warranted by Phil-Tite Enterprises, Inc. against defective material and workmanship for 1 (one) year from installation date. We will repair/replace, as we deem necessary, product that has been verified defective by a representative of our company. Any damage caused by either freight or wrongful installation are not covered under this warranty. This warranty does not cover normal wear, or force majeure - caused by fire, flood, earthquake, explosion, war, or acts of God. Seals and O-rings are not a warranty item. Warranty is null and void if a) item is disassembled, b) item is installed improperly, or c) warranty label has been tampered with or is removed from product.

TO BE FILLED OUT BY INSTALLER AT THE TIME OF INSTALLATION

Expiration Date:_____

Serial Number:_____

Model Number:_____

Mfg. Number:_____

NOTE: Return Warranty registration card must be returned for Warranty to honored.

Date of Installation:_____

Installation Company:_____

Address:_____

_____

Telephone: ( )_____

Figure F-1

Drop Tube

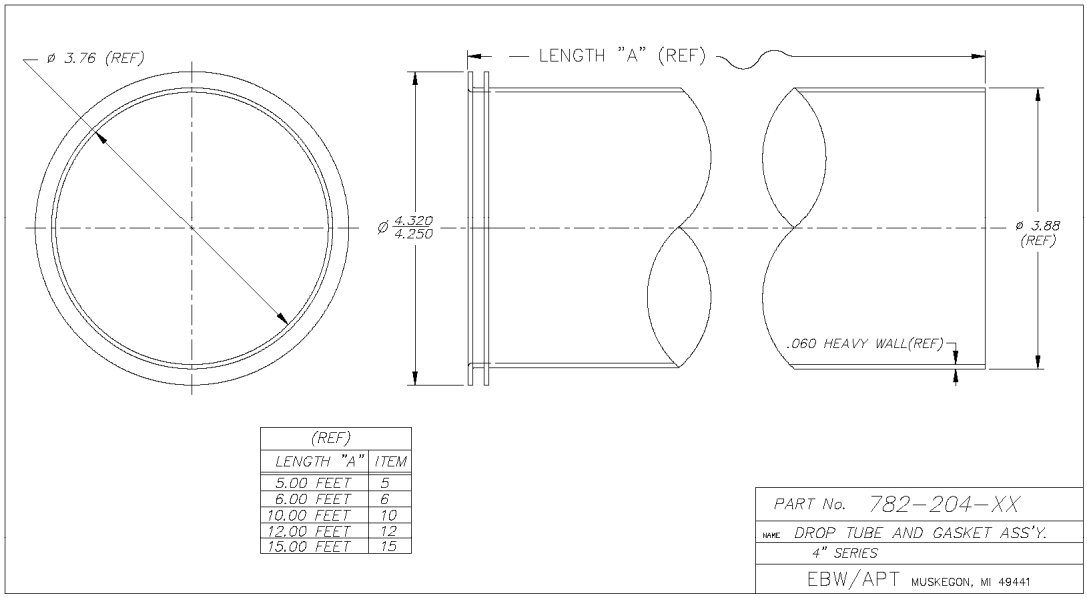

Figure F-2

Drop Tube Overfill Prevention Device

Installation Instructions

The Auto Limiter II®

Automatic Shut-off for UST's

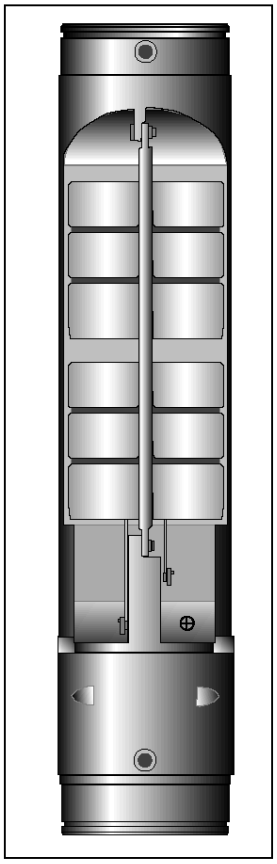

Sales Desk (800) 475-3291 • **Sales Fax** (800) 475-4329 • **Phone** (231) 755-1671
2814 McCracken Avenue, Muskegon, MI 49441 • **Fax** (231) 755-7201 • www.ebw.com
Franklin Fueling Systems
©2002 EBW Inc. Form No 6002 10/03

INSTRUCTIONS
(Read before beginning)

The EBW Model 708 Automatic Shut-Off Valve is designed to be installed in the 4" Riser Pipe of Underground Storage Tanks and reduce the flow by 90% (At approximately 92% of tank capacity) and shut down the flow at 95% tank capacity. After the valve has been activated the delivery hose can be drained. The 708 should only be installed in a spill containment manhole.

Note: Shut off points are influenced by the specific gravity of stored liquid. These instructions are based on average performance utilizing all products. ***This valve was designed to be used as an emergency overfill prevention device only!***

Note: NEW YORK CITY FIRE DEPARTMENT CERTIFICATION # 4959
For N.Y.C. applications, this valve must be installed with a N.Y.C. Fire Department approved spill container. There are additional installation requirements including, but not limited to, product identification and color coding of fills. Installation must comply with applicable codes at time of installation.

Note: STATE OF CALIFORNIA EVR CERTIFIED APPLICATIONS
For CA EVR applications, there are optional components and installation comments mentioned in this manual that does not apply to an EVR certified Phase I System. Refer to appropriate CARB Phase I Executive Order for a list of approved Phase I Equipment and installations. Assembly leak rate <0.17CFH @ 2.00" w.c.

Important: Check to make sure all parts have been provided and do not substitute parts other than supplied.

WARNING! FAILURE TO FOLLOW INSTRUCTIONS OR SUBSTITUTION OF OTHER PARTS MAY *CAUSE FAILURE* OF THE DEVICE WHICH MAY CREATE A HAZARDOUS CONDITION AND/OR ENVIRONMENTAL DAMAGE.

Important: Determine if the underground storage tanks is equipped with a Ball Float Vent Valve as shown in Figure 1 on Page 4. If the tank is equipped with a Ball Float Vent -Valve the nipple portion must not extend more than 3" into the tank for the EBW Automatic Shut-Off Device to function properly. If the Ball Float Vent-Valve nipple extends more than 3" from the top of the tank, remove it or replace it with one of the following valves;

3" dia. ball float valve, EBW part # 308-300-05.

All other applications can use above or optional 2" dia. EBW part # 308-213-01

WARNING! *EBW PRODUCTS SHOULD BE USED IN COMPLIANCE WITH APPLICABLE FEDERAL, STATE AND LOCAL LAWS AND REGULATIONS. PRODUCT SELECTION SHOULD BE BASED ON PHYSICAL SPECIFICATIONS AND LIMITATIONS AND COMPATIBILITY WITH ENVIRONMENT AND MATERIAL TO BE HANDLED. EBW MAKES NO WARRANTY OF FITNESS FOR A PARTICULAR USE.*

IMPORTANT: In order to prevent product spillage from the Underground Storage Tank (UST), properly maintained delivery equipment and a proper connection and the tight fill adaptor are essential. Delivery personnel should be managed and trained to inspect delivery elbows and hoses for damaged and missing parts. They should always make certain there is a positive connection between the adaptor and elbow. If delivery equipment is not properly maintained, or the elbow is not securely coupled to the adaptor - a serious spill may result when the EBW model 708 closes, causing a hazard, and environmental contamination.

PRODUCT WARRANTY: All EBW, Inc. Equipment is thoroughly tested before shipment and guaranteed to the extend of replacing only goods found to be defective in manufacture. We cannot allow claims for labor or consequential damage resulting from purchase, installation, or misapplication of our products.

TOOLS NEEDED FOR INSTALLATION AND ASSEMBLY

1. One each, new or sharp 1/16 and 3/16 Drill bit.
2. Drill
3. Tape Measure
4. Half round fine file
5. Hammer
6. Hacksaw with fine tooth blade
7. Screwdriver - Flat Blade
8. Masking or Electrical Tape
9. Pop Rivet Tool
10. Permanent Marker

PACKING LIST (INCLUDED WITH THE AUTO LIMITER)

1 Valve Assembly 708-440
1 Upper Drill Template 708-221
1 Screw clamp 708-160
1 Tapered punch 708-172
7 3/16 closed end pop rivets 11070-06
1 Warning Plate 708-218
2 Standard Drop Tube "O"-Rings 11003-22
1 Coaxial "O"-Ring 11003-21
1 Instruction Manual - Form # 6002
1 Epoxy Sealant #11372-01

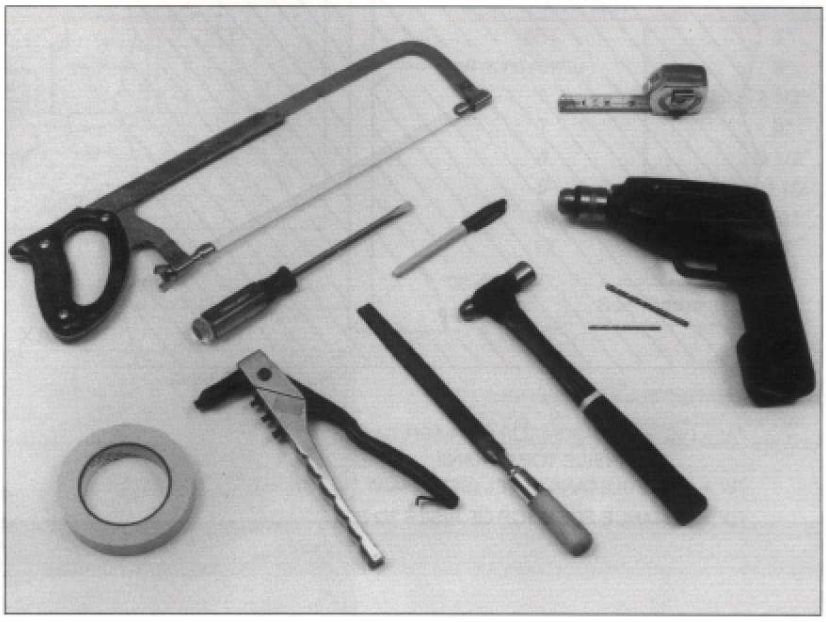

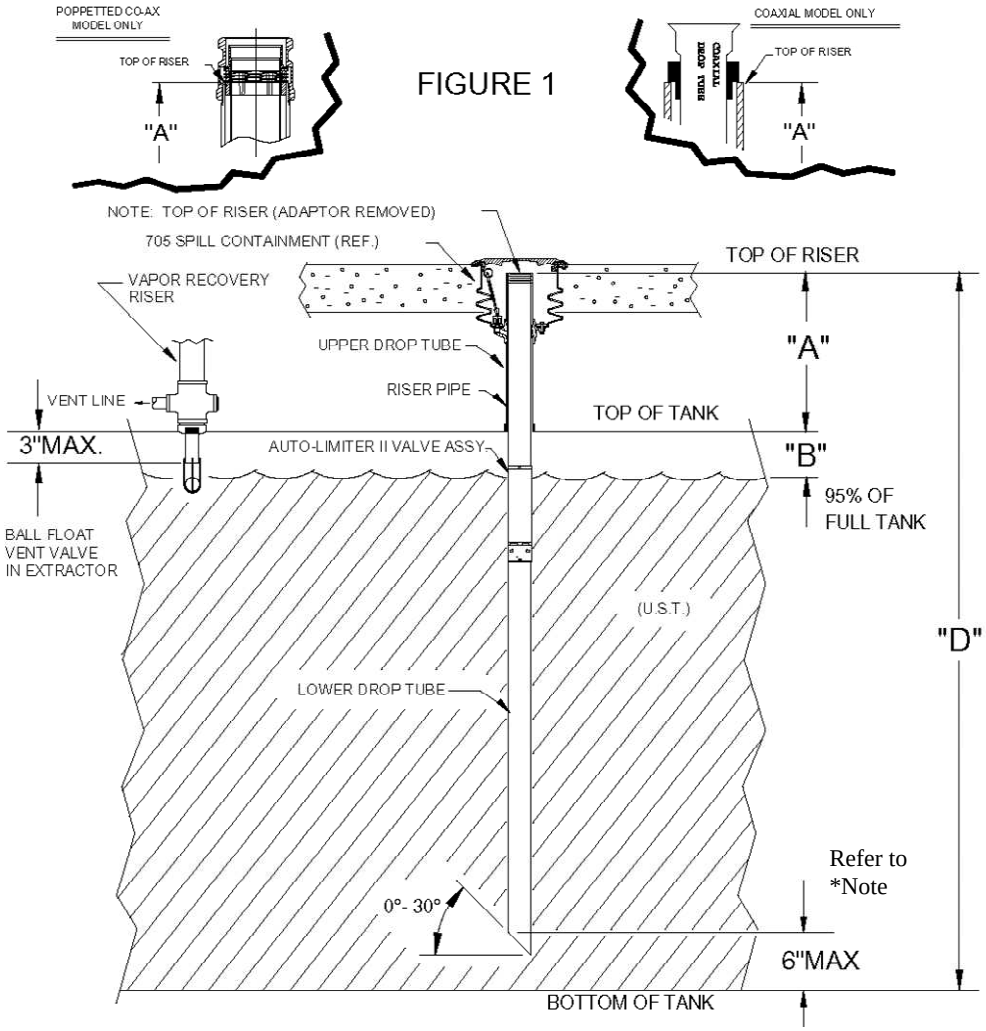

"A" = DISTANCE FROM TOP OF RISER TO THE INSIDE TOP OF TANK

"B" = 95 % FULL TANK LEVEL (SEE CHART "A" FOR YOUR SIZE TANK)

"D" = DISTANCE FROM TOP OF RISER TO BOTTOM OF TANK

The above figures may contain components (including part numbers) that have not been certified by the California Air Resources Board (ARB)for a specific Phase I Vapor Recovery System. Please refer to Exhibit 1 of the appropriate CARB Phase I Executive Order for a list of Phase I Vapor Recovery System Equipment.

*** Note: The discharge opening of the fill-pipe must be entirely submerged when the liquid level is six inches above the bottom of the tank.**

ASSEMBLY INSTRUCTIONS:

Important: Check and clear the inside diameter of riser pipe for any burrs, improper reaming, or foreign materials prior to installation. Failure to do so may damage or prevent the valve from functioning properly.

FIGURE 2

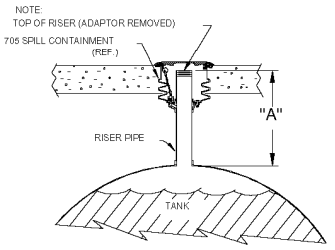

1. Remove fill cap, adaptor and the existing drop tube from the riser pipe. Measure from the inside top of the tank to the top of the riser pipe (See Dimension "A" Fig.2)

2. Determine the 95% Shut-Off point for your specific tank from the tank chart provided with the tank or a calibrated gauge stick. To determine your actual "B" dimension, subtract the 95% level height from overall tank diameter. (Tank diameter (inches) - 95% level (inches) = "B" dimension) Chart "A" below is provided for reference only. Your actual "B" dimension will vary slightly based upon your actual overall tank diameter head and bulkhead design.

FIGURE 3

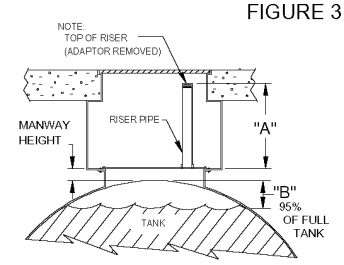

CHART A

TANK DIAMETER	APPROX. DIMENSION "B" FOR 95% SHUT OFF
4FT.	5"
5	6"
6	7 1/2"
7	8"
8	9 1/2"
9	10 1/2"
10	13"
12	14"

See Figure 1

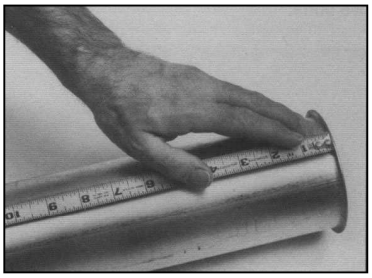

Be certain to add the manway height to the " B" Dimension when the 708 Auto Limiter is used in manway applications.

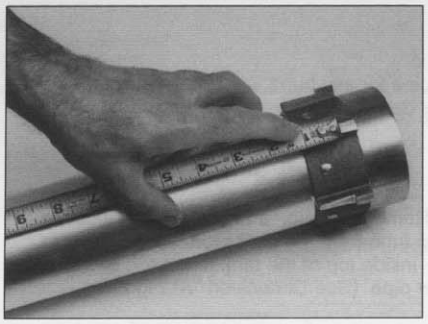

3. To Determine the correct length of the upper drop tube add Dimensions " A" to " B" and subtract 4

_____ + _____ - 4" = _____
"A" "B" Drop tube length"C"

For tanks with manways add dimensions "A" to "B" to manway height and subtract 4" to get drop tube length.

_____ + _____ + _____ - 4" = _____
"A" "B" Manway height Drop tube length "C"

Note: For Poppetted Co-Ax Drop Tube Model (See Page 9 of instructions)

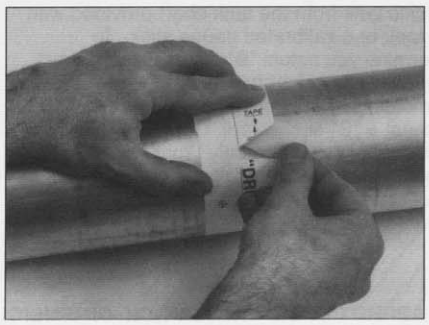

4. Mark the Upper Drop Tube. For a Dual Point Application measure down from the flange & mark Dimension " C " on the drop tube.
For Coaxial installations measure down from the bottom side of the supporting lugs of the top adaptor and mark the dimension " C " on the drop tube. For coax installations go to step # 7.

5. Wrap the paper cutting and drilling template tight around upper drop tube with bottom cut edge aligned with mark from Step 1. Tape ends and top edge of template to drop tube.

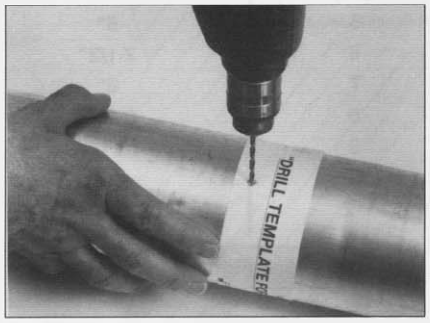

6. Carefully drill (4) four 1/16" pilot holes through the drop tube on centerlines of drill template. Enlarge 1/16" hole to 3/16".

7. Slide the stainless hose clamp provided over the vapor drop tube until the outside edge lines up with the mark applied in step 4, and tighten. Using the edge of the clamp as a sawing guide, carefully saw through the drop tube, rotating the tube while sawing will help prevent runout. After sawing, file end square if needed and remove burrs.

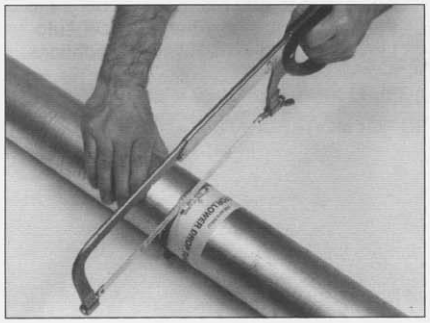

The above figures may contain components (including part numbers) that have not been certified by the California Air Resources Board (ARB) for a specific Phase I Vapor Recovery System. Please refer to Exhibit 1 of the appropriate CARB Phase I Executive Order for a list of Phase I Vapor Recovery System Equipment.

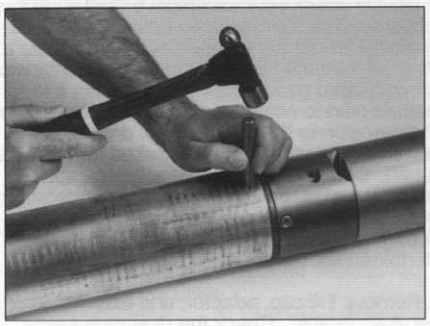

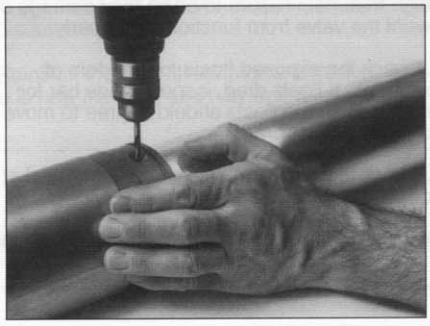

8. Install the appropriate "O"-Ring into the groove at the top of the valve. Use the 3 3/8" OD "O"-Ring on the coaxial models and the3 5/8" OD "O"-Ring on the dual point conversions.

9. Mix approximately 1/2 of total sealant provided in kit.
(Follow instructions on back of package.)
Apply sealant to inside diameter of drilled upper drop tube. Coverage should be completely around the tube. Position the upper tube on the valve assembly and carefully push the drop tube down past the o-ring until it rests on the shoulder.

10. ***Dual Point Installations-***
Rotate the upper drop tube so that the (4) four holes line up with the (4) four holes in the valve assembly. Using the tapered punch, carefully dimple the (4) four holes in the drop tube into the counter sunk holes of the valve body.

Coaxial Installations-
For co-axial apply sealant to outside diameter of drilled upper drop tube.
Making certain that the top tube is fully inserted, drill (4) four 3/16" holes through the upper drop tube using the countersunk holes in the valve body as a guide.

11. Install (4) four 3/16" diameter closed end pop rivets into the holes discussed in step 10. Use only the aluminum pop rivets supplied. Important: The heads of the rivets must be flush or below the exterior surface of the upper drop tube or valve body.

The above figures may contain components (including part numbers) that have not been certified by the California Air Resources Board (ARB) for a specific Phase I Vapor Recovery System. Please refer to Exhibit 1 of the appropriate CARB Phase I Executive Order for a list of Phase I Vapor Recovery System Equipment.

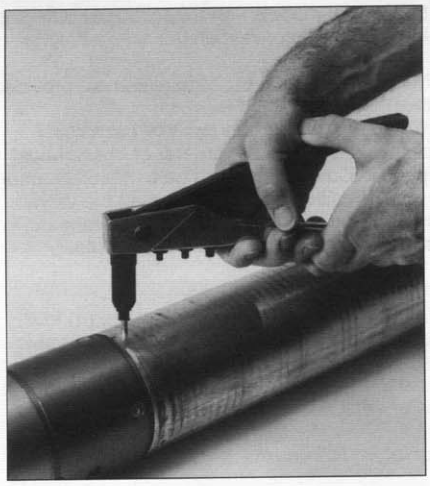

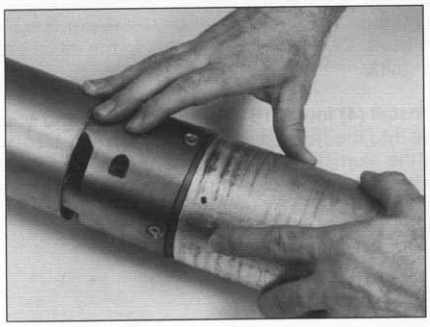

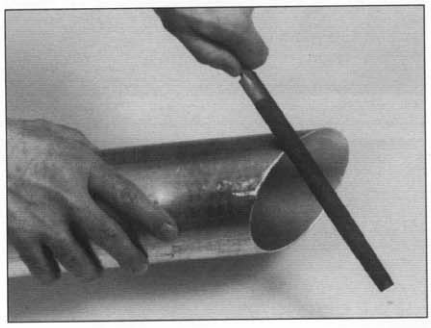

12. Install the lower drop tube 3 5/8" O.D. "O"-Ring into the groove in the bottom of the valve.

13.File a chamfer on the inside edge of the drilled end of the lower drop tube.
Mix the balance of the sealant provided.
Apply sealant to inside diameter of drop tube (outside of co-axial).

Coverage should be completely around the tube. Slide the lower drop tube onto the bottom of the valve assembly until it rests on the shoulder. Turn drop tube to align holes, using the tapered punch, carefully dimple the (3) three holes in drop tube. Install (3) three 3/16 diameter closed end pop rivets. Cover all (7) seven rivet heads and both ends of pivot shaft with sealant.

Note: Failure to apply sealant correctly may cause failure of vapor pressure decay test.

14.Measure the tanks dimension "D" (Fig. 1), and subtract 6" Mark this dimension on the lower end of the lower drop tube. Cut and deburr tube at mark. If bottom of drop tube is not cut square, bevel must not exceed 30 degrees from horizontal and must extend down. Also, lowest point of drop tube must not project within the minimum clearance specified by tank mfg.

INSTALLATION INSTRUCTIONS

15. Double check your assembly by following this procedure. The "D" dimension shown on figure 1 is the overall length from the top of the riser pipe to the bottom of the tank. Either mark this dimension on your calibrated gauge stick or stretch out a tape measure next to completed assembly aligning the "D" dimension to the top flange of drop tube assembly. The valve body is marked for the 95% shut off. Compare the calibrated gauge stick reading found at the 95% valve mark or determine the dimension location of this valve mark and calculate from your tank chart. the tank volume determined should equal 95% of capacity.

16. Remove Fill cap, adaptor, and existing drop tube, if applicable. Check the riser pipe inside diameter for any burrs, improper reaming, or foreign material. Failure to do so may damage or prevent the valve from functioning properly.

17. Check the exposed floats for freedom of movement. If floats drag, inspect guide bar for damage. Both the floats should be free to move up and down without drag.

18. Check to make sure there is a rubber gasket under flange of upper drop tube.

19. Carefully lower the complete shut-off assembly

The above figures may contain components (including part numbers) that have not been certified by the California Air Resources Board (ARB) for a specific Phase I Vapor Recovery System. Please refer to Exhibit 1 of the appropriate CARB Phase I Executive Order for a list of Phase I Vapor Recovery System Equipment.

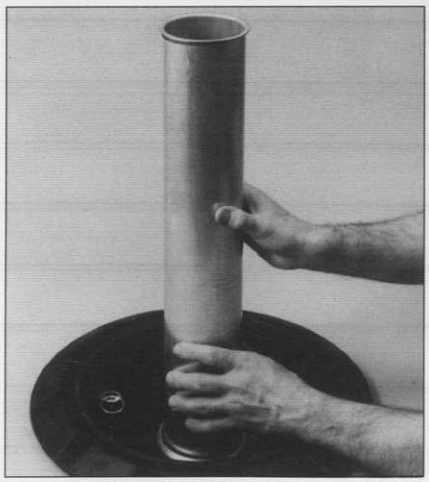

down the riser pipe. ***HOLD UNIT BY UPPER DROP TUBE ONLY. DO NOT FORCE THE VALVE DOWN THE RISER PIPE.*** If the valve does not fit, the riser pipe will have to be cleaned or deburred before insertion of the valve.

20 .Install warning plate around the 4" riser pipe below the threaded portion using the stainless steel band clamp.

21. Reinstall the tight fill adaptor and gasket. The valve is now installed and fully operational.

Maintenance

The 708 AutoLimiter II is maintenance free. Annual Visual inspection inside the installed drop tube for remnants of broken dip sticks or visual damage is recommended. Repairs must beperformed by qualified individuals. Should the drop tube assembly be removed for any reason, request EBW form 6329 for a detailed valve component inspection procedure that is recommended prior to reinstalling.

The above figures may contain components (including part numbers) that have not been certified by the California Air Resources Board (ARB) for a specific Phase I Vapor Recovery System. Please refer to Exhibit 1 of the appropriate CARB Phase I Executive Order for a list of Phase I Vapor Recovery System Equipment.

Product Specifications

Construction

Valve Body.....Anodized Cast Aluminum
Upper Drop Tube.....Aluminum
Lower Drop Tube.....Aluminum
Flappers.....Die Cast Zinc and Acetal
Float .....Polyethylene

Flow rate

Typical with 4" hose.....350 gal/min
Min. required for proper operation....150gal/min
Maximum working pressure.....10 psi

Weight

Shipped in the carton.....33 pounds

Size (Standard Unit)

Valve Body Length.....17.94"
Upper Drop Tube.....4" Dia x 60" Long
Lower Drop Tube.....Std. 4" Dia x 96" Long

Models

708-450....Standard model up to 10' tank diameters

708-451....Standard model up to 12' tank diameters

708-460.....Coaxial model up to 10' tank diameters

708-461.....Coaxial model up to 12' tank diameters

708-463.....Poppetted Co-Ax model up to 12' tank Dia.

Poppetted Co-Ax Drop Tube Only

For poppetted Co-Ax Drop tube Applications add "A" to "B" and subtract 3 1/2"

_____ + _____ - 3 1/2 " = _____
"A" "B" Upper Drop tube length"C"

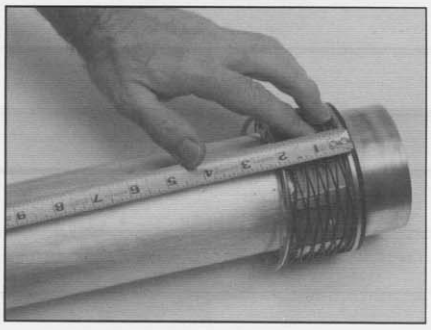

Sales Desk (800) 475-3291 • **Sales Fax** (800) 475-4329 • **Phone** (231) 755-1671
2814 McCracken Avenue, Muskegon, MI 49441 • **Fax** (231) 755-7201 • www.ebw.com
Franklin Fueling Systems
©2002 EBW Inc. Form No 6002 10/03

Figure F-3

Drain Valve Isolation Kit

Spill Containment Drain Valve Isolation Kit
EBW PART #708-255-01

Please read before beginning

Important: ***Check to make sure that all parts have been provided and do not substitute parts other than those supplied.***

WARNING: ***FAILURE TO FOLLOW INSTRUCTIONS OR SUBSTITUTION OF OTHER PARTS MAY CAUSE FAILURE OF THE DEVICE WHICH MAY CREATE A HAZARDOUS CONDITION AND/OR ENVIRONMENTAL DAMAGE.***

WARNING: ***EBW PRODUCTS SHOULD BE USED IN COMPLIANCE WITH APPLICABLE FEDERAL, STATE AND LOCAL LAWS AND REGULATIONS. PRODUCT SELECTION SHOULD BE BASED ON PHYSICAL SPECIFICATIONS AND LIMITATIONS AND COMPATIBILITY WITH ENVIRONMENT AND MATERIALTO BE HANDLED. EBW MAKES NO WARRANTY OF FITNESS FOR A PARTICULAR USE.***

Tools Needed:

One each, new or sharp 1/16", 3/8", and 3/16" Drill Bit
Drill
Tape Measure
Half round fine file
Hammer
Hacksaw with fine tooth blade
Screwdriver - Flat blade
Masking or Electrical tape
Permanent Marker
Petroleum Jelly
Short Extractor Wrench (EBW 321-100-02)

Packing List:

3 Drill Templates (708-221-01)
1 Tapered punch (708-172)
12 3/16" closed end pop rivets (11070-06)
3 "O-Rings" (11003-22)
1 Instruction Manual - (Form 6320)
1 Epoxy Sealant w/ mix tube(11372-01)
1 Top Flange Adaptor (708-202-01)
1 Bottom Seal Adaptor Assembly (708-262-01)
1 Gasket drop tube (11182-01)

EBW's Model 708 Drain Valve Isolation Kit was designed to isolate the drain valve in EBW series 705, 715 & 725 spill containers from the ullage space of the underground storage tank. Isolating the drain valve improves spill container drainage and minimizes the possibility of venting storage tank vapor. This Drain Valve Isolation Kit was designed to be used on EBW Model 782 - 4" Drop Tubes & EBW Model 708 Drop Tube Mounted 4" Overfill Valves.

Sales Desk (800) 475-3291 • **Sales Fax** (800) 475-4329 • **Phone** (231) 755-1671
2814 McCracken Avenue, Muskegon, MI 49441 • **Fax** (231) 755-7201 • www.ebw.com
Franklin Fueling Systems
©2003 EBW Inc. Form No 6320 10/03

INSTALLATION INSTRUCTIONS

1. Read these instructions through prior to proceeding.
2. Assemble and cut the drop tube assembly for a normal installation as per the installation instructions provided with drop tubes or overfill valve assemblies. The overall full diameter length (length from top flange to the start of any bevel cut on tube bottom, see "A" on (Fig. 1) of this drop tube/overfill valve assembly must be within 6" of the bottom of the tank after installation. If bottom of drop tube is not cut square, bevel cut must not exceed 30 degrees from horizontal and must extend down from overall "A" mark. Also, lowest point of drop tube must not project with-in the minimum clearance specified by tank manufacturer.

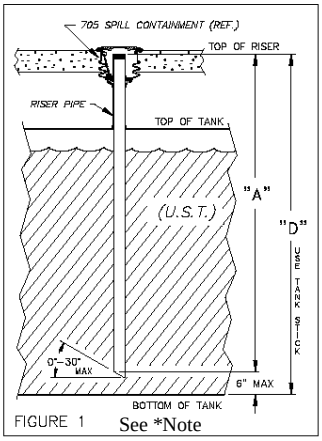

FIGURE 1 See *Note

*Note: The discharge opening of the fill-pipe must be entirely submerged when the liquid level is six inches above the bottom of the tank.

3. Measure the dimension from the top of the spill bucket riser pipe to the top of the tank riser pipe, dimension "B", (Fig. 2). Add 1.12" (1 1/8") to dimension "B" to determine cut point, dimension "C".
"B" + 1.12" = "C"

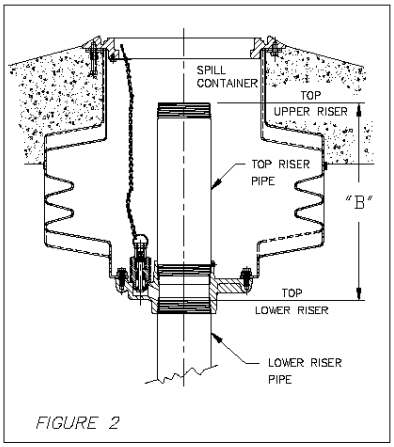

FIGURE 2

4. Transfer dimension "C" to the drop tube or top tube of the overfill valve assembly (Fig. 3), starting from underneath the tube top flange. Using a hack saw, make a square cut on the drop tube at this point.
5. Measure 1" down from the underside of the top flange and mark the drop tube (Fig. 3). Using a hack saw, make a square cut on the drop tube at this point. Discard the drop tube flange piece that is removed.
6. De-burr the inside of the drop tubes at all cuts.
7. Wrap the paper drilling templates provided around the three cut ends, and tape. Drill (4) 1/16" pilot holes at the locations marked on each template. Enlarge the 12 holes to 3/16" diameter. De-burr all drilled holes.

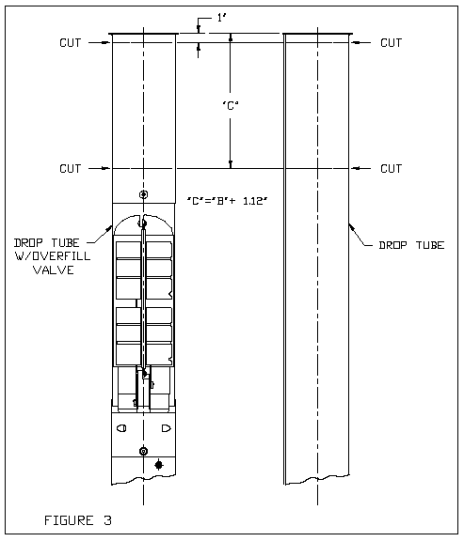

8. Install the three loose “o-rings” into the o-ring grooves on the two ends of the Bottom Seal Adapter and the single o-ring groove on the Top Flange Adapter. Install the mix tube onto the end of the epoxy dispenser.
9. Bottom Seal Adapter has one end stamped “TOP”. You will be assembling the opposite end of this adapter first. Dispense approximately 1/2 of the epoxy sealant onto the adapter end NOT MARKED TOP and spread evenly around the outside circumference of this adapter.
10. Slide the remaining original drop tube assembly w/ overfill valve onto the end of the Bottom Seal Adapter that you just applied sealant to. Use a turning motion as you install the tube to evenly spread the sealant and allow tube to work it’s way over the o ring seal. Continue working tube onto this adapter until it butts up to the shoulder on the adapter end. Now turn until tube holes align with adapter holes (you may need to use a small rigid probe to find inside holes through the sealant.
11. Now insert two of the rivets provided into two opposite holes to hold tube alignment to adapter. Using the punch provided, dimple outside drop tube hole on the other two opposite holes to recess rivet head, insert and set rivets. Remove, dimple and set the first two rivets used for alignment. IMPORTANT – The heads of these rivets must not protrude outside the circumference of the drop tube OD wall or installing into the tank riser pipe may be difficult and care must be taken to maintain joints as straight as possible to avoid a crocked final tube assembly.
12. Remove any excess epoxy sealant that may have worked out of tube to adapter joint and spread a thin layer of this sealant over each of the four rivet heads. If additional sealant is needed, dispense from tube provided.
13. Now slide the remaining short piece of tubing that was cut from the drop tube assembly onto the “TOP” end of the Bottom Seal Adapter & drop tube assembly. Rotate tubing so it slides over the O ring. Line up, dimple and rivet the assembly holes using same method as noted in step #11 above.
14. Install the Top Flange Adapter to the other end of this tube in same fashion. There is no need to utilize the epoxy sealant on either of these two top tube joints for they are above the gland seal and are not required to be vapor tight.
15. Measure up 2” from the center of the exposed “o-ring” seal on the Bottom Seal Adapter and drill (4) 3/8” diameter holes, one each above each of the 4 rivet locations on that end of the adapter. Exact alignment of these holes is not important. These holes are to provide the liquid drain path for the spill

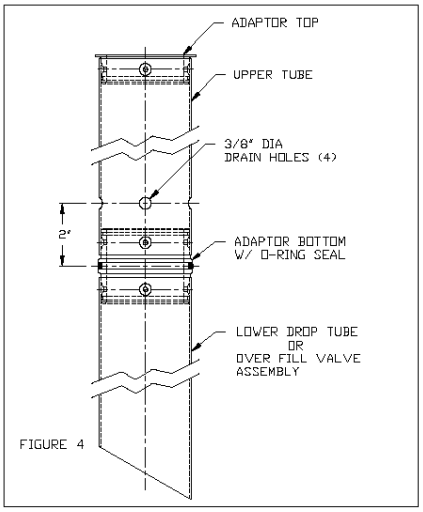

FIGURE 4

container drain valve. Locate the flat flange gasket seal and install on top of drop tube directly under the Top Flange Adapter. Allow sealant to cure for a minimum of 90 minutes. (See instructions provided with sealant.)

16. The modified drop tube is now ready to be installed into the fill riser piping. Prior to installation, inspect the inside of the riser pipe and the riser piping for burrs on the pipe ends. IMPORTANT - If any sharp burrs are present on the tank and spill containment riser pipe ends, the O Ring will be cut during installation and a proper seal will not be obtained. All burrs must be removed prior to installation of this drop tube assembly. Spill containment riser pipes can be removed from the spill buckets and the burrs filed or ground away from the hazardous location. Tank riser burrs can be filed once a plumbers 4" test bladder is inflated into the tank riser to isolate tank vapors and all fuel and vapors are removed from the spill containment bucket. Also, it may be helpful to utilize some of the remaining epoxy sealant to lightly fill in the top end of the tank riser nipple screwed into the spill containment base. This trick would fill in any sharp edges present on the top end of the tank riser pipe.

17. Now generously lubricate the inside of the riser piping and the Bottom Seal Adapter o ring with suitable grease or petroleum jelly. Carefully lower the drop tube assembly into the riser piping until the o ring seal sets on the spill containment riser pipe. Using a short extractor wrench, engage the cross bar in the Top Flange Adapter and begin rotating the drop tube assembly back and forth while applying a moderate push down on the tube assembly. O ring seal will enter the spill containment riser pipe. Continue this turning motion while you work the seal down through the spill riser. Eventually you will feel the seal drop out of the spill riser and down onto the tank riser. Using the same turning motion, work seal into the top of the tank riser until Top Flange Adapter and flange seal set down on top end of the spill riser pipe.

18. Using a suitable thread sealant, install a swivel type fill adapter. Installation of drop tube assembly is now complete. It is recommended that the drop tube decay test (TP-201.1D) be performed to verify seal performance.

Note: EBW Kit # 90079 Isolation Bladder Test Kit must be obtained to perform TP-201.1D. The Std. inflatable Plumber's bladder can't be inserted into drop tube. Instructions are included with the 90079 kit.

Should it be necessary to remove the drop tube, a short extractor tool (EBW 321-100-02) is required. Engage the cross bar in the Top Flange Adapter with extractor wrench, while pulling up on the drop tube assembly, rotate the assembly back and forth. It may be helpful to unthread and remove the spill containment riser pipe with the drop tube assembly. If it is necessary to replace the Bottom Seal Adapter o ring seal, order EBW replacement seal kit, EBW Part #90090

©2003 EBW Inc. Form No 6320 10/03

Figure F-4

Drop Tube Isolation Test Kit

Installation Instructions

Service Kit 90079 Drop Tube Isolation Test

Service Kit 90079 is for isolating spill containment drain valves for drop tube mounted overfill protection valves on EBW style drop tube assemblies. This service kit is necessary to perform CA EVR leak test procedures identified in TP-201.1D. This service kit will also work on other nominal 4" ID drop tubes normally found on UST fill risers. **Item #1** test bladder is a nitrile balloon encased in a protective fabric bag. this balloon is inserted (deflated) into the drop tube and positioned at desired point of isolation. ***To achieve a bubble tight seal, the fabric protection bag must be soaked (wetted) with oil prior to use. this can be any available motor oil such as 30W or 10W-30.*** After installation, bag is inflated to 15 psi utilizing **item #2** charger assembly and a basic hand pump or low pressure compressed air **(DO NOT OVERINFLATE)**. All connections are standard tire valve stems (Schrader Valves) and charging assembly includes a low pressure safety relief valve. After inflation, disconnect charging assembly so test bladder hose can be curled over the cross bar and back into the drop tube. Install test cap on product adapter and preform leak test procedure. Service kit comes with **item #3**, 3' extension hose if deeper test point is required. After testing is completed, reconnect charging assembly and open manual bleeder valve to deflate test bladder. Remove test bladder from the drop tube and store in a clean (dirt free) plastic bag.

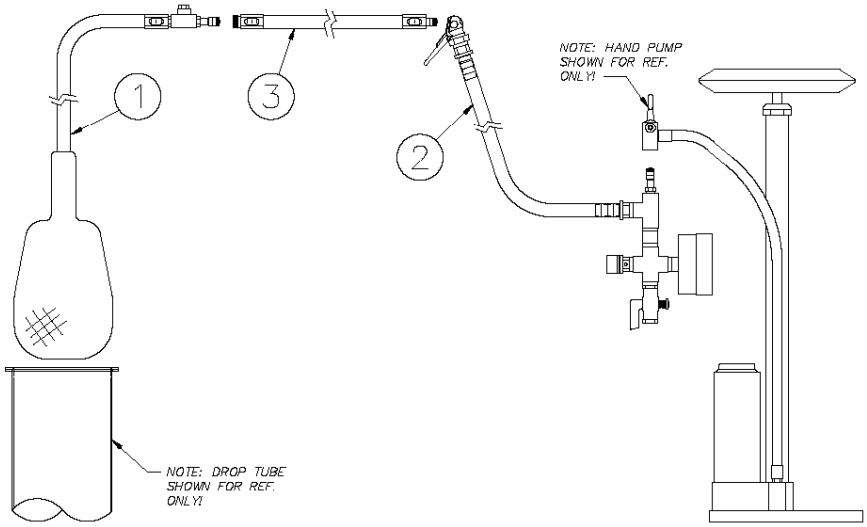

Item	Part Name	Part No	Qty
1	Test Bladder	11539-01	1
2	Charging assembly	11540-01	1
3	3' Extension Hose	11541-01	1

Sales Desk (800) 475-3291 • **Sales Fax** (800) 475-4329 • **Phone** (231) 755-1671
2814 McCracken Avenue, Muskegon, MI 49441 • **Fax** (231) 755-7201 • www.ebw.com
Franklin Fueling Systems
©2002 EBW Inc. Form No 6327 10/02

Figure F-5

Tank Bottom Protector

INSTALLATION INSTRUCTIONS

Tank Protector Assembly (785-400-01)

IMPORTANT: The discharge opening of the fill-pipe must be entirely submerged when the liquid level is six inches above the bottom of the tank.

HOW TO INSTALL TANK PROTECTOR ASSEMBLY: wrap paper drill template around the bottom edge of tube. Drill three 1/8" holes through drop tube on the centerline of drill template. Bend each of the three legs of tank protector assembly outward slightly. This will hold legs of tank protector assembly against inside of drop tube when tank protector assembly is installed. Place open end of tank protector assembly inside bottom end of drop tube. Now place a rivet through one hole in drop tube and through slot in leg of tank protector assembly and place an eyelet over rivet and through slot of leg with head of eyelet on outside (**see Figure A**). Use a rivetool to set the rivet. Do the same on the other legs. When completed, the tank protector assembly must move freely up and down inside of the drop tube.

NOTE: Three rivets are used to guide tank protector assembly up and down inside of the drop tube, not to hold tank protector assembly tight to drop tube.

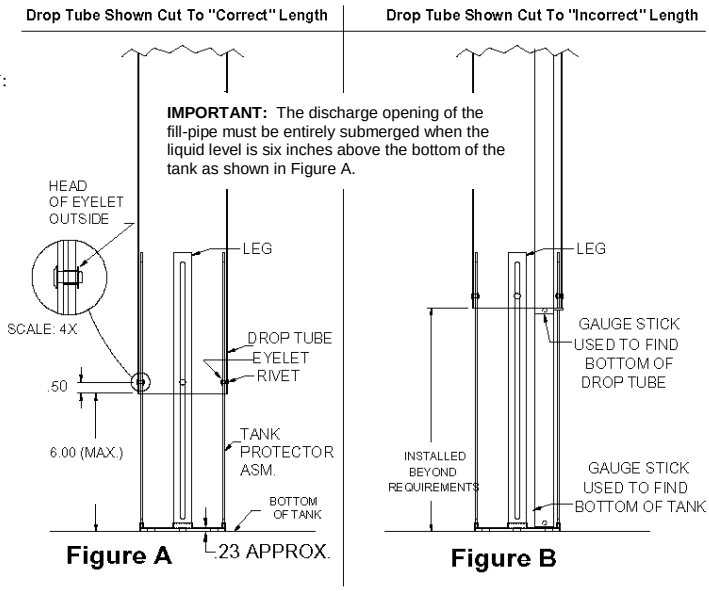

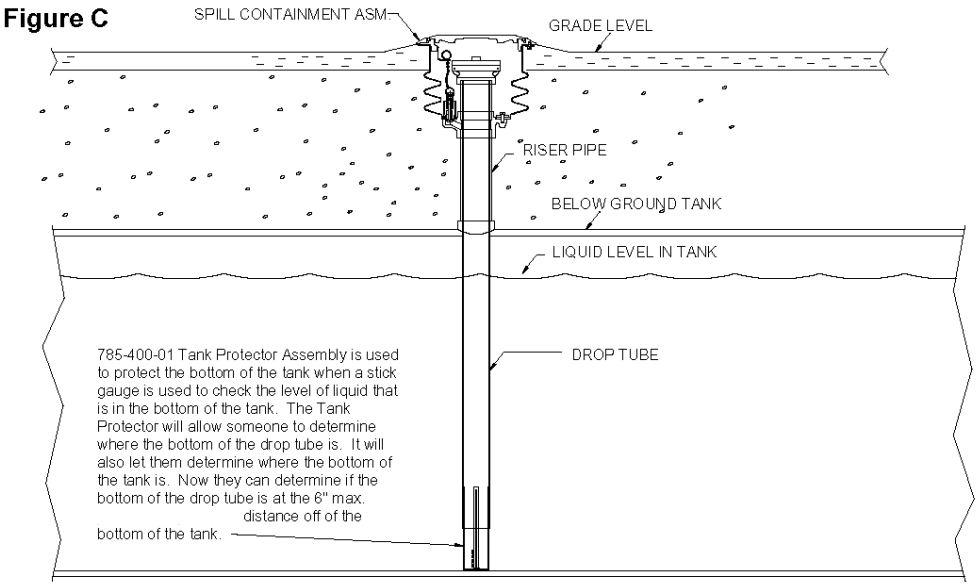

Sales Desk (800) 475-3291 • **Sales Fax** (800) 475-4329 • **Phone** (231) 755-1671
2814 McCracken Avenue, Muskegon, MI 49441 • **Fax** (231) 755-7201 • http://www.ebw.com
©2000 EBW Inc. Form No 6242 4/00

Figure G-1

Tank Gauge Port Adaptor and Cap

Installation Instructions

Spacers, Floats, and Service kits for 960"s" and 970 series probes

1. TRIM SPACERS TO SIZE OF RISER PIPE. (SEE FIG. 1)
2. LOOSELY ASSEMBLE BOTH SPACERS AND SLIDE THEM ON THE PROBE INSERT THE SCREWS THROUGH THE LARGER HOLES AND THREAD INTO THE SMALLER HOLES (SEE FIG. 2)
3. PLACE THE TOP SPACERS 2" FROM THE TOP OF THE PROBE, PLACE THE BOTTOM SPACER 6" MIN. FROM THE TOP SPACER.
4. SLIDE ON THE FLOATS STARTING WITH THE PRODUCT FLOAT, THEN THE WATER FLOAT.
5. SLIDE ON THE PROBE ADAPTER, THEN SNAP ON THE PROBE FOOT. (SEE FIG. 3)
6. INSPECT PROBE RISER PIPE THREADS FOR FOREIGN MATERIAL OR THREAD BURRS. CLEAN IF NECESSARY.
7. THREAD ADAPTER (90037 OR 90038 SERVICE KIT) ON RISER PIPE, TIGHTEN 40TO 50 FT. LB. TORQUE. (INTEGRAL SEAL, SELF SEALING)
8. THREAD THE PROBE WIRE THROUGH SERVICE KIT CAP WIRE GRIP SO PROBE PLUG END IS ON INSIDE OF SERVICE KIT CAP. TIGHTEN WIRE GRIP TO 75 - 100 IN. LB. TORQUE
9. CONNECT PROBE WIRE TO PROBE. CAREFULLY SLIDE PROBE INTO TANK RISER UNTIL IT SETS ON BOTTOM OF TANK. SNAP SERVICE KIT CAP ON ADAPTER. CHECK FOR ANY LEAKS USING SOAP SOLUTION.

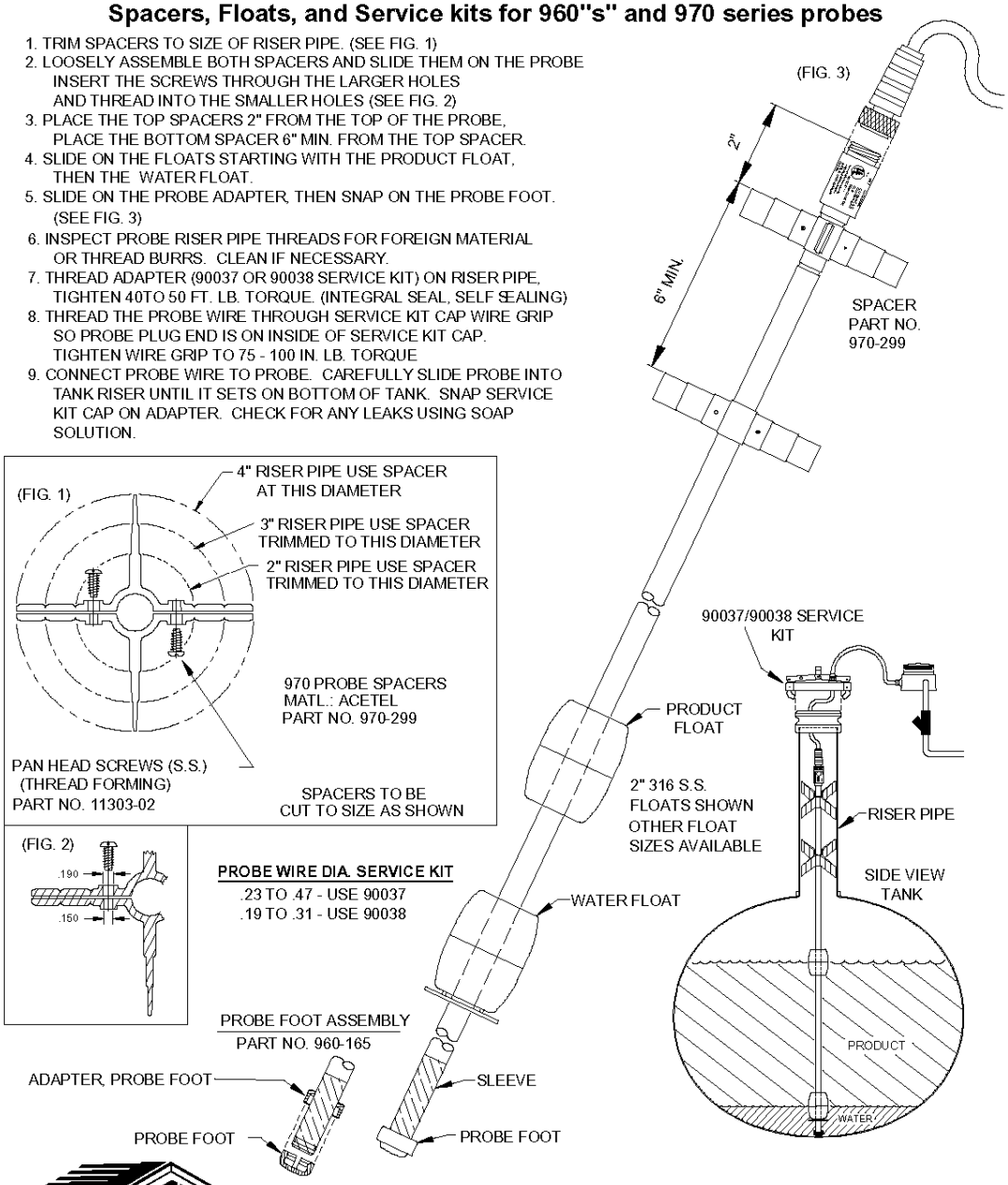

Sales Desk (800) 475-3291 • **Sales Fax** (800) 475-4329 • **Phone** (231) 755-1671
2814 McCracken Avenue, Muskegon, MI 49441 • **Fax** (231) 755-7201 • www.ebw.com
Franklin Fueling Systems
©2003 EBW Inc. Form No 6216 2/03

Figure H-1

Husky 5885 Pressure/Vacuum Vent Valve

Husky	MODEL #5885 Recommended Installation, Maintenance and Inspection Instructions **EVR Pressure Vacuum Vent**	5885

WARNING Designed for use at motor fuel dispensing facilities only.

INSTALLATION INSTRUCTIONS

NOTE: Always adhere to installation / usage instructions and warnings. Improper use may result in injury, damage or hazardous spill.

1. Remove the vent from the carton and visually inspect for any shipping damage.
2. Apply fuel resistant pipe sealant to the threads on the 2" vent stack.
3. Screw the Pressure Vacuum (P/V) vent onto the vent stack and tighten to a range of 20 to 50 ft-lbs with a suitable wrench.
4. DO NOT OVERTIGHTEN

TESTING / MAINTENANCE / INSPECTION

Testing Criteria Per TP201.1E and Exhibit 3 of applicable Phase 1 E.O.

Leak rate: Pressure = .05 CFH @ 2" wc, Vacuum = .21 CFH @ -4" wc.
Cracking Pressure = 2 1/2" to 6" wc, Vacuum = -6" to -10" wc.

.

Annually Inspect the P/V vent valve for foreign objects:

1. Remove the screws that hold on the top cover. Do not remove the screens.
2. Remove any debris from inside the lower cover.
3. Check the drain holes in the lower cover.
4. Reinstall the top cover.
5. Tighten the screws firmly.

- All drive aways, maintenance and inspection activities must be logged using the serial number of the individual product.
- Apply city, state, or federal testing regulations as appropriate.

ANY TEST / INSPECTION FAILURE REQUIRES IMMEDIATE EQUIPMENT REPLACEMENT OR REMOVAL FROM SERVICE.

MADE IN THE USA

ALWAYS ADHERE TO INSTALLATION / USAGE INSTRUCTIONS AND WARNINGS.
Improper use may result in injury, damage, or hazardous spill.

GENERAL WARNINGS / INSTRUCTIONS

- Use of equipment is at individuals' own risk.
- Always abide and adhere to city, state, and federal regulations regarding use and installation of dispensing equipment.
- Always follow the dispenser manufacturer's instructions.
- Always turn off all power to dispenser during maintenance and inspection activities.
- Always close the shear valves during maintenance and inspection activities.
- Always relieve pressure from system prior to performing maintenance activities.
- Always check continuity after installation using a megohmeter (Refer to PEI RP 400 for details).
- Always replace or remove from service damaged or leaking dispensing equipment immediately.
- Always report leaks / spills / accidents to appropriate authorities.
- Always wear appropriate safety equipment during maintenance activities.
- Always have appropriate fire extinguishing equipment within 5 feet of dispensers.
- Always use pipe sealant approved for gasoline service.
- Always place containers on the ground before filling.
- Always discharge static electricity before using or servicing equipment by touching a metal part of the dispenser before and after fueling vehicle.
- Never smoke within 20 feet of dispensers.
- Never keep in service past recommended life.
- Never leave the nozzle unattended while dispensing fuel.
- Never use sparking or flaming devices within 20 feet of dispensers.
- Never use power tools near dispensers or to aid in the installation process.
- Never use cell phone within 20 feet of dispensers.
- Never reenter car when fueling vehicle.
- Never allow gasoline to touch eyes or skin.
- Never use at flow rates in excess of regulatory guidelines.
- Never use at flow rates less than 5 gallons per minute.
- Never dispense flammable material into unapproved containers.
- Never dispense fuel without a valid driver's license.

CAUTION: DO NOT ALTER OR COVER
THE P/V VENT

WARRANTY

VAPOR PRODUCTS – Husky Corporation will, at its option, repair, replace, or credit the purchase price of any Husky manufactured product which proves upon examination by Husky, to be defective in material and/or workmanship for a period of one (1) year of installation or fifteen (15) months from the manufacture date of shipment by Husky, whichever occurs first. The warranty period on repaired or replacement vapor recovery products is only for the remainder of the warranty period of the defective product.

CONVENTIONAL PRODUCTS – Husky Corporation will, at its option, repair, replace, or credit the purchase price of any Husky manufactured product which proves upon examination by Husky, to be defective in material and/or workmanship for a period of one (1) year from the manufacture date of shipment by Husky.

Buyer must return the products to Husky, transportation charges prepaid. This Warranty excludes the replaceable bellows, bellows spring assembly, spout assembly and scuff guard, unless (i) damage is obvious when the product is removed from shipping carton and (ii) the defective product is returned to Husky prior to use. This warranty does not apply to equipment or parts which have been installed improperly, damaged by misuse, improper operation or maintenance, or which are altered or repaired in any way.

The warranty provisions contained herein apply only to original purchasers who use the equipment for commercial or industrial purposes. There are no other warranties of merchantability, fitness for a particular purpose, or otherwise, and any other such warranties are hereby specifically disclaimed.

Husky assumes no liability for labor charges or other costs incurred by Buyer incidental to the service, adjustment, repair, return, removal or replacement of products. Husky assumes no liability for any incidental, consequential, or other damages under any warranty, express or implied, and all such liability is hereby expressly excluded.

Husky reserves the right to change or improve the design of any Husky fuel dispensing equipment without assuming any obligations to modify any fuel dispensing equipment previously manufactured.

TROUBLESHOOTING GUIDE

Pressure Decay Test Failure...	1. Test vent to CARB TP201.1E. 2. Replace vent.

For stations with ISD monitoring

Vapor leak...	1. Verify other equipment is not the cause. 2. Test vent to CARB TP201.1E 3. Replace vent.
Exceeds allowable system cracking pressure...	1. Replace vent

GENERAL TECHNICAL DATA

Fuel Type	Test and warranty for gasoline and diesel fuel
Body	Sand cast aluminum
Screens	Stainless Steel 40 mesh
Seal	Nitrile Foam
Covers	Aluminum
Weight	1.2 lbs
Threads	2" NPT
Case Quantity	20
Listings	CARB UL
Patents	5,957,157

ACCESSORIES

Part #5041
3" to 2" Threaded Adaptor

Installation Procedure:
1. Visually inspect the o-ring and threads for chips, dirt & debris.
2. Apply fuel resistant pipe sealant to the 3" NPT threads of the vent pipe.
3. Screw the P/V vent adaptor onto the vent stack by hand.
4. Apply fuel resistant pipe sealant to the 2" NPT threads of the P/V vent adaptor.
5. Screw the P/V vent onto the adaptor and tighten to a range of 20 to 50 ft-lbs. with a suitable wrench. Do not overtighten.

Part #5426
Test Adaptor

NOTE: This adaptor is designed to fit on the inlet of the P/V Vent to allow for field and lab tests.

Installation Procedure:
1. Screw P/V Vent adaptor into the P/V Vent valve until hand tight. Make sure the seal is compressed.
2. Place the P/V Vent valve and adaptor on a flat surface.
3. Attach a 3/16" hose (Tygon fuel tubing) from test apparatus to hose barb on the side of the adaptor.
4. After testing, remove hose from barb and remove adaptor from vent.

Figure J-1

Spill Containment EVR Upgrade Kits

EBW Spill Containment Post 1997 Tank Construction Identification For California Phase I EVR Upgrade

All EBW Spill Containment Tanks manufactured after 1997 are suitable for upgrade to CA Phase I EVR status provided that the following identification is made using these test instructions. This is not an EVR test.

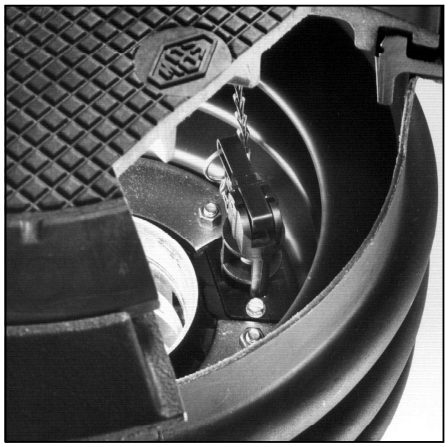

1997 and earlier Spill Containment

1. Drain Valve Sets on Tank to Base Bolt Circle
2. There are 6 – 3/8" Fasteners Bolting Tank to Base in Addition to Two 1/4" Drain Valve Fasteners

Post 1997 Spill Containment

1. Drain Valve Sets Inside the Tank to Base Bolt Circle
2. There are 12 – 3/8" Fasteners Bolting Tank to Base

If you have any questions regarding identification of the tank version, please call EBW Engineering @ 800-475-5151 for further construction details. If you have successfully identified the tank as a "Post 1997" construction style, this is a potential candidate for EVR upgrade with-out replacement of the spill containment bucket. Please follow following steps prior to proceeding with upgrade.

1. Inspect tank for visible damage or cracks. If any present, you will have to replace Spill Containment tank.

2. If no damage visible, do a hydrostatic test of the spill containment by filling with water to with-in 2" of top rim. It is recommended that you purchase EBW part #90022 "Blank & Test Drain Kit" to remove drain valve prior to hydrostatic test. Measure initial level once filled, replace lid to prevent evaporation, and measure final level after a minimum of 8 hour hold period.

3. If both levels were the same, you can proceed with tank upgrade. If final level was lower there is a tank leak. Replace Spill Containment. Properly dispose of the test water.

Sales Desk (800) 475-3291 • **Sales Fax** (800) 475-4329 • **Phone** (231) 755-1671
2814 McCracken Avenue, Muskegon, MI 49441 • **Fax** (231) 755-7201 • www.ebw.com
Franklin Fueling Systems
©2003 EBW Inc. Form No 8380 10/03

4. If Spill Containment passes hydrostatic test, you can proceed with upgrade. Following kits are available for product and vapor riser spill containment tanks;

Product Fill Riser Spill Containment Upgrade Kit – Part #90087 (includes drain valve)
Vapor Riser Spill Containment Upgrade Kit – Part #90088 (no drain valve)

EVR Spill Containment Upgrade Kits

Kit #90087 – Product Fill Riser Spill Containment Upgrade
Includes the following EBW items and work instructions
705-337-19 Replacement EVR Drain Valve & Form 6304
708-255-01 Drain Valve Isolation Kit & Form 6320
777-201-01 Product Fill Dust Cap
Grade Level & Below Grade Installation Books – Forms 1307 & 1306

Customer MUST PURCHASE 1 – SWF-100-B Phil-Tite Swivel Product Adapter from Phil-Tite Component Distributor

Kit #90088 – Vapor Riser Spill Containment Upgrade
Includes the following EBW items and work instructions
90089 – Drain Valve Permanent Blank Kit & Form 6220
702-301-01 Pump & Form M20
304-301-01 Vapor Adapter Dust Cap
Grade Level & Below Grade Installation Books – Forms 1307 & 1306

Customer MUST PURCHASE 1 – SWV-101-B Phil-Tite Swivel Vapor Adapter from Phil-Tite Component Distributor

Sales Desk (800) 475-3291 • **Sales Fax** (800) 475-4329 • **Phone** (231) 755-1671
2814 McCracken Avenue, Muskegon, MI 49441 • **Fax** (231) 755-7201 • www.ebw.com
Franklin Fueling Systems
©2003 EBW Inc. Form No 8380 10/03

Figure K-1

Epoxy Sealant

EBW Part# 11372-01

Epoxy Sealant Application Instructions

This epoxy product is suitable for joining or sealing iron, steel, aluminum, bronze, copper and thermoset phenolic and epoxy plastics. It has good impact and peal strength along with excellent chemical resistance provided that the following application instructions are followed. This product is suitable for use with unleaded gasoline with additives to 20%, diesel fuel and motor oils.

Warning - This product is not to be used with ethanol blends exceeding 20%.

Color – Black
Mix Ratio – 1/1 (use self mixing dispenser tubes)
Working Time – 10 minutes @ 75 F Less in higher temperatures
Functional Cure Time – 90 minutes @ 75 F More in colder temperatures

This sealant is utilized during the assembly of numerous EBW components. Follow the detailed installation instructions received with the component to be assembled to identify the joints, fasteners, etc. that require sealant.

Application Steps

1. Pre-assemble all components to assure proper fit prior to applying epoxy sealant. Sealant has only a 10 minute working time.
2. Clean (vapor phase degreasers or hot aqueous solution) application surfaces of all grease, oils and heavy contaminants.
3. Abrading or roughening application surfaces with file, steel wool or sanding paper will increase the microscopic bond significantly.
4. Dispense a bead on application surface and spread with a clean stick or other flat tool. Mixing tube will properly mix both components, no additional mixing is necessary.
5. After assembly of parts, sealant must be allowed to reach it's functional cure time in free air prior to placing components into service. Normally, at 75 F, this time is 90 minutes. In colder climates, either move assemblies inside or allow to cure for up to three hours prior to use.
6. If it is necessary, heavy build up of sealant may be sanded or filed after the functional cure time and prior to installing into service.

M.S.D.S. information may be obtained from www.devcon.com or calling 978-777-1100 .
Reference Devcon "10 Minute Epoxy, part #0046"

Sales Desk (800) 475-3291 • **Sales Fax** (800) 475-4329 • **Phone** (231) 755-1671
2814 McCracken Avenue, Muskegon, MI 49441 • **Fax** (231) 755-7201 • www.ebw.com
Franklin Fueling Systems
©2003 EBW Inc. Form No 6331 5/03

Figure L-1

EBW Phase I Equipment Required Maintenance

Required Inspection & Maintenance
to Maintain Equipment Performance

Spill Containment Manholes – at least once a year

- Remove any standing liquid and dispose of properly
- Brush all buildup off brass drain valve screen (if applicable)
- Remove all dirt and foreign materials
- Scrape all foreign materials away from tank lid sealing surfaces
- Should it be necessary to replace drain valve due to breakage or considerable contamination buildup, use *EBW 705-337-19 Replacement Drain Valves only*
- Perform leak test using the established "Pressure Integrity Test" for a combination of Drop Tube, Drain Valve and Overfill Prevention Device, TP201.1D. *Use 90079 Drop Tube Isolation Test Kit.*

Rotatable Fill Vapor Adapters, Dust Caps & Probe Riser Adapters – at least once a year

- Inspect all product and vapor riser dust cap seals for damage. If damage is observed, replace seal.
  Aluminum Vapor Cap Seal – 304-101-01
  Nylon Product Cap Seal – 777-111-01
- Perform Rotatable Adapter maintenance as specified by Phil-Tite Enterprises, Inc. Perform established "Static Torque Test", TP201.2B.
- Leak testing would be accomplished during "Pressure Integrity Test" for drain valve or Drop Tube Mounted Overfill Valve, TP 201.1C or TP201.1D
- Annual Maintenance of the Probe Riser Cap assemblies is normally not required. Whenever probe service is necessary, inspect service cap seal for damage and replace, if necessary, at that time.
  Probe Riser Cap Seal – 777-111-01

Drop Tube Mounted Overfill Prevention Valves – at least once a year

- Inspect inside of drop tube for the presence of a broken dip stick or noticeable damage to the valve flapper. If damage is observed, valve must be replaced.
- If not already performed during drain valve testing, leak test Drop Tube assembly using established "Pressure Integrity Test" for Drop Tube/Overfill Prevention Device, TP201.1C or TP201.1D.

NOTE: EBW Kit #90079 Isolation Bladder Test Kit must be obtained to perform TP-201.1D. The standard inflatable Plumber's Bladder can't be inserted into EBW drop tube. Instructions are included in the #90079 kit.

- It is not required by EBW that the drop tube be pulled for inspection unless damage is noted. Should local authority require removal of the drop tube, the following seals and inspection step are necessary;
- Replace Drop Tube Flange Gasket – 11182-01
- Inspect Tank Bottom Protector for freedom of movement. Repair or replace if necessary.
- Inspect OPD components, use instructions on EBW from 6329.
- Inspect drop tube joint sealant. Repair with EBW part # 11372-01, epoxy only.

Pressure Vacuum Vent Valves –

- Perform the required maintenance as specified by Husky Corporation.

At least every three years, unless shorter intervals specified by local authority, perform the established "Static Pressure Performance Test", TP-201.3

Should any questions arise regarding any inspection or repair procedures, please contact EBW Technical at 80-475-5151 (8 a.m. to 5 p.m. E.S.T.)

Sales Desk (800) 475-3291 • **Sales Fax** (800) 475-4329 • **Phone** (231) 755-1671
2814 McCracken Avenue, Muskegon, MI 49441 • **Fax** (231) 755-7201 • www.ebw.com
Franklin Fueling Systems
©2002 EBW Inc. Form No 6002 10/03

Figure M-1

EBW Warranty Tag

EVR Equipment Warranty

EBW warrants that this product was factory tested and inspected prior to shipment and meets or exceeds the performance standards and specifications established by the California EPA, Air Resource Board Certification procedure CP201 as amended July 1, 2003 and shall be free from defects in material and workmanship, for a period of 1 (one) year from date of installation or 18 months from date of purchase, which ever occurs first. During the warranty period, EBW or our representative will repair or replace the product, if the product is determined to be defective at the location where the product is in use, at no charge to the purchaser. EBW will not allow claims for labor or consequential damage resulting from purchase, installation, or misuse of our products.

This warranty applied only to products that have been installed in accordance with EBW specifications and a valid warranty registration form has been returned to EBW within 30 days of installation.

This warranty will not apply to any product, which has been subject to misuse, negligence or accident: or misapplied or used in violation of the product instructions or warnings: or modified or repaired by unauthorized person: or improperly installed.

Please fax back this Entire Document with the information filled out Completely to the toll free phone number listed below.

Part Number (Mfg. Label) ***Mfg. Date***

Date Purchased _____ ***Date Installed*** _____

Owner Name _____

Address _____

_____

Phone Number _____ ***Contact Person*** _____

EBW Distributor Purchased from _____

_____

Fax to: 1 (800) 475-4329

Sales Desk (800) 475-3291 • **Sales Fax** (800) 475-4329 • **Phone** (231) 755-1671
2814 McCracken Avenue, Muskegon, MI 49441 • **Fax** (231) 755-7201 • www.ebw.com
Franklin Fueling Systems
©2003 EBW Inc. Form No 8352 10/03