California Environmental Protection Agency

Air Resources Board

ARB Approved

Installation, Operation and Maintenance Manual

For the CNI Manufacturing Phase I EVR System
As Certified by Executive Order VR-104-F

15627 ARROW HIGHWAY, IRWINDALE, CALIFORNIA 91706
PHONE (626) 965-6664; OUT OF STATE CALLS (800) 4CNI-MFG; FAX (626) 962-4854
WEBSITE: WWW.CNI-MFG.COM EMAIL: INFO@CNI-MFG.COM

NOTICE:

The ARB Approved Installation, Operation and Maintenance Manual for the CNI Phase I EVR System describes the tools and methods required to install the CNI Phase I EVR System. Unless specified otherwise, only technicians that are trained and certified by CNI (i.e. CNI Certified Technicians) are able to perform installation, maintenance or repairs of components manufactured by CNI or the warranty will be void. Other training certifications such as district specific or International Code Council (ICC) certifications may be required by local air pollution control/air quality management district.

To schedule a training class, CNI can be contacted at the following:

CNI
15627 Arrow Hwy.
Irwindale, California 91706
Phone: (626) 962-6646

CNI's certified training representatives can also be contacted to schedule classes.
CNI's representatives can be contacted at the following:

In southern California, contact Tom Goodwin at (818) 519-2910
In northern California, contact Ron Trengrove Sr. and/or Jr. at (800) 758-5882

A certified list of CNI Certified Technicians can be viewed at www.cni-mfg.com.

Only technicians that are trained and certified by FFS (i.e. FFS Certified Technicians) are able to perform installation, maintenance or repairs of the PV-Zero, manufactured by FFS, or the warranty will be void. A list of FFS Certified Technicians can be viewed at http://www.franklinfueling.com/service/

To schedule a training class, FFS can be contacted at the following:

Stan Brodecki, Allan Busch, or Steve Langlie
Enhanced Vapor Recovery Systems
Franklin Fueling Systems
Phone: 800-225-9787
Email: brodecki@franklinfueling.com
busch@franklinfueling.com
langlie@franklinfueling.com

It is the responsibility of each CNI and/or FFS Certified Technician to be familiar with the current requirements of state, federal and local codes for installation and repair of gasoline dispensing equipment. It is also the responsibility of the CNI and/or FFS Certified Technician to be aware of all necessary safety precautions and site safety requirements to assure a safe and trouble free installation.

CNI Phase I EVR System
Installation, Operation, and Maintenance Manual

Table of Contents

Equipment **Page**

Exhibit 1 Listing Checklist 1

Summary of Guidelines for Required Maintenance Activities 6

Phase I EVR Equipment Installation Check List for
Installing Products per ARB Executive Order VR-104-D 11

Installation of 2 Point EVR System, using CON1-31103 Containments (Vapor) 17

Installation of 2 Point EVR System, using CON2-31103 Containments (Product) 25

Installation of EVR Stand Alone/Direct Bury System, using
205V-31103 or 214V-31103 Containments (Vapor) 36

Installation of EVR Stand Alone/Direct Bury System, using
205P-31103 or 214P-31103 Containments (Product) 45

Installation of CNI Mfg. Automatic Tank Gauge Cap and Adapter 55

Installation of the EMCO Wheaton A1100EVR Guardian 56

Installation of Emco Wheaton Swivel Fill (Product) Adapter
Retail A0030-124 (‘non-S’ series) 55

Installation Instructions for Emco Wheaton Swivel Vapor Adapter
Retail A0076-124 (‘non-S’ series) 68

EMCO Wheaton Retail O-RING Kit #493995, ‘non-S’ Series Swivel Adapters 70

EMCO Wheaton Retail Adapter Gasket Kit #409628 72

Installation of Emco Wheaton Swivel Fill (Product) Adapter
Retail A0030-124 (‘S’ series) 73

Installation of Emco Wheaton Swivel Vapor Adapter
Retail A0076-124S (‘S’ series) 75

Instructions for EMCO Wheaton Retail O-ring Kit #494301 for
‘S’ Series Swivel Adapters 77

Instructions for CNI Mfg. RP12 Push Drain Valve Assembly and Maintenance 80

Maintenance Instructions for CNI Mfg. Dust Caps and Cap Gasket 81

Example of CNI Manufacturing Warranty Card 81

(continued on next page)

Husky 5885 Pressure/Vacuum Vent Valve 82

FFS PV-Zero Pressure/Vacuum Vent Valve 86

OPW 634LPC (product) and 1711LPC (vapor) Dust Caps 98

CompX Dust Caps 99
- CSP1-634LPC (product)
- CSP3-1711LPC (vapor)
- CSP2-634LPC (product)
- CSP4-1711LPC (vapor)

Table of Figures

Equipment	Figure	Page
Torque Values for CON1-31103 and CON2-31103 Containments		14
Torque Values for 205V-31103 and 205P-31103 Containments		15
Torque Values for 214V-31103 and 214P-31103 Containments		16
Typical Vapor Containment (CON1-31103)	A-1	19
Vapor Riser Length Guide for CON1-31103 Containment	V4	20
CON1 Containment Flange and Compression Ring	V5, V5.1, V5.2	21
CON1 Vapor Containment Nipple Length Guide	V6	22
CNI Mfg. EVRSYS106 Rotatable Adaptor Tool (vapor application)		23
Bellows Assembly/Cover Ring Interface CON1-31103 Containment	V9	24
Typical Installation using CON2-31103 and CNI Mfg. DT100 Drop Tube	A-2	27
Typical Installation using CON2-31103 Containment and EMCO A1100EVR Guardian	A-3	28
Product Riser Length Guide for CON2 Containment	P1	29
CNI Mfg. DT100 Drop Tube	P2, P2.1	30
CON2-31103 Containment Flange and Compression Ring	P3, P3.1, P3.2	31
EVRSYS112 Tool and Close-up of Jam Nut Installation on CON2-31103 Containment	P7	31
CON2-31103 Containment Nipple Length Guide	P5	32
CNI Mfg. EVRSYS106 Rotatable Adaptor Tool (product application)		34
Close-up of Bellows Assembly/Cover Ring Interface of CON2-31103 Containment	P8	35
Typical Installation for a Stand Alone/Direct Bury Using CNI Mfg. 205V-31103 Containment	A-4	38
Typical Installation for a Stand Alone/Direct Bury Using 214V-31103 Containment	A-5	39
Vapor Riser Length Guide for 205V-31103 and 214V-31103 Containments	V1	40

Table of Figures (continued)

Equipment	Figure	Page
Breakdown of 205V-31103 and 214V-31103 Containments	V2	42
Vapor Containment Nipple Length Guide for 205V-31103 and 214V-31103 Containments	V3	43
Typical Installation of CNI Mfg. 214P-31103 Containment	A-6	47
Typical Installation of CNI Mfg. 205P-31103 Containment	A-7	48
Product Riser Length Guide for 205P-31103 and 214P-31103 Containments	P4	49
CNI Mfg. DT100 Drop Tube with 205P-31103 and 214P-31103 Containments	P2, P2.1	50
Breakdown of the 205P-31103 and 214P-31103 Containments	P26, P6.a	51
CNI Mfg. Jam Nut with 205P-31103 and 214P-31103 Containments	P9	52
Product Containment Nipple Length Guide for 205P-31103 and 214P-31103 Containments	P5	53
CNI Mfg. Automatic Tank Gauge Cap and Adapter	A-8	55
EMCO Wheaton A1100EVR Guardian	A-9	56
Installation Instructions for Emco Wheaton Swivel Fill (Product) Adapter Retail A0030-124 (‘non-S’ series)	A-10	55
Installation Instructions for Emco Wheaton Swivel Vapor Adapter Retail A0076-124 (‘non-S’ series)	A-11	68
EMCO Wheaton Retail O-RING Kit #493995, ‘non-S’ Series Swivel Adapters	A-12	70
EMCO Wheaton Retail Adapter Gasket Kit #409628	A-13	72
Installation Instructions for Emco Wheaton Swivel Fill (Product) Adapter Retail A0030-124S (‘S’ series)	A-14	73
Installation Instructions for Emco Wheaton Swivel Vapor Adapter Retail A0076-124S (‘S’ series)	A-15	75
EMCO Wheaton Retail O-ring Kit #494301 for ‘S’ Series Swivel Adapters	A-16	77
Instructions for CNI Mfg. RP12 Push Drain Valve Assembly and Maintenance	A-17	80
Maintenance Instructions for CNI Mfg. Dust Caps and Cap Gasket	A-18	81

Table of Reference Lists/Tables

Topic	Table	Page
Summary of Guidelines for Required Maintenance Activities		6
Phase I EVR Equipment Installation Check List for Installing Products per ARB Executive Order VR 104-F		11
Pre-Assembly Notes for a 2 Point EVR System, using CON1-31103 Containments (Vapor)		17
Torque Values for CON1-31103 Containments (Vapor)	1	17
Pre-Assembly Notes for a 2 Point EVR System, using CON2-31103 Containments (Product)		25
Torque Values for CON2-31103 Containments (Product)	2	25
Pre-Assembly Notes for EVR Stand Alone/Direct Bury System, using Model Nos. 205V-31103 or 214V-31103 Containments (Vapor)		36
Torque Values for 205V-31103 or 214V-31103 Containments (Vapor)	3	37
Pre assembly Notes for EVR Stand Alone/Direct Bury System, using Model Nos. 205P 31103 or 214P 31103 Containments (Product)		45
Torque Values for 205P-31103 or 214P-31103 Containments (Product)	4	45

Table of Equations

Application	Equation Number	Page
Determining Length of 4 inch N.P.T Containment Nipple (CON1-31103)	1	22
Determining Length of 4 inch N.P.T Containment Nipple (CON2-31103)	2	33
Determining Length of 4 inch N.P.T Containment Nipple (2105V-31103 and214V-31103)	3	43
Determining Length of 4 inch N.P.T Containment Nipple (2105P-31103 and214P-31103)	4	53

Exhibit 1 Listing Checklist

Equipment	Manufacturer/Model Number

(All Containment Assemblies part numbers XXXX-31103 denote EVR systems)

Vapor Containment Assembly for a 2 point system

□ CNI Mfg. CON1-31103 (vapor side)
Comes pre-assembled from CNI and consists of:

□ STP-43 9 inch high 5-gallon spill container with round cut-out (part number was previously STP-34) (Schulink XL-350 crosslinked polyethylene),

or a

□ STP-47 20 inch 10-gallon spill container with round cut-out (Schulink XL-350 crosslinked polyethylene),

or a

□ STP-45 27 inch high 15-gallon spill container with round cut-out (part number was previously STP-35) (Schulink XL-350 crosslinked polyethylene);

and

- STP-24 round flange (ductile iron, gold anodized) includes Containment Installation/Removal Tool Rest (Aluminum, Gold Chem. Plated)
- STP-18 round flange compression ring (ductile iron, gold anodized)
- STP-23 round flange gasket (Buna N, rubber)
- STP-13 4-pc. Bellows and Containment Compression Ring (ductile iron, gold anodized) (part number was previously STP-39)
- STP-33 3-piece Bellows hold down clamp (ductile iron, gold anodized) (was previously named 3 pc. bellows inner compression ring with same part number)
- MPRP-10 bellows gasket (Buna N, rubber) (part number was previously STP-32)

Continued on next page.

Exhibit 1 Listing Checklist (con't.)

Fill-Spill (Product) Containment Assembly for a 2 point system

□ CNI Mfg. CON2-31103 (product/fill side)
Comes pre-assembled from CNI and consists of:

□ STP-42 9 inch high 5-gallon spill container with oval cut-out (part number was previously STP-34) (Schulink XL-350 crosslinked polyethylene),

or a

□ STP-46 20 inch high 10-gallon spill container with oval cut-out (Schulink XL-350 crosslinked polyethylene),

or a

□ STP-44 27 inch high 15-gallon spill container with oval cut-out (part number was previously STP-35) (Schulink XL-350 crosslinked polyethylene);

and

- STP-22 oval flange (ductile iron, gold anodized) includes Containment Installation/Removal Tool Rest (Aluminum, Gold Chem. Plated)
- STP-17 oval flange compression ring (ductile iron, gold anodized)
- STP-21 oval flange gasket (Buna N, rubber)
- STP-13 4 pc. Bellows and Containment Compression Ring (ductile iron, gold anodized) (part number was previously STP-39)
- STP-33 3-piece Bellows hold down clamp (ductile iron, gold anodized) (was previously named 3 pc. bellows inner compression ring with same part number)
- MPRP-10 bellows gasket (Buna N, rubber) (part number was previously STP-32)
- RP12-PUSH Drain Valve
- CNI Mfg. 200JN, Jam Nut (hard coat anodized aluminum 356T6)

Continued on next page.

Exhibit 1 Listing Checklist (con't.)

Vapor Containment Assembly for a direct bury/stand-alone*

□ CNI Mfg. 205V-31103 (with Snap-Tight Cover)
Comes pre-assembled from CNI and consists of:

- STP-12RING 3-pc. Compression Ring (ductile iron)
- STP-12 Sealing Rubber Ring (Buna N, rubber)
- 205V Top and Bottom section of containment (ductile iron); and
- CNI Mfg.STP-200, Snap-Tight Cover (was previously part number 200STC), (356-T6 Hard Coat Anodized Aluminum) Includes STP-4 Snap Tight Cover gasket (Buna N, rubber)

□ CNI Mfg. 214V-31103 (with Gravity Cover)
Comes pre-assembled from CNI and consists of:

- STP-12RING 3-pc. Compression Ring (ductile iron)
- STP-12 Sealing Rubber Ring (Buna N, rubber)
- 214V Top and Bottom section of containment (ductile iron); and
- CNI Mfg. GAC Gravity Cover (Ductile Iron) Includes GAC-GSK gasket (Buna N, rubber)

Product Containment Assembly For a direct bury/stand- alone*

□ CNI Mfg. 205P-31103 (with Snap-Tight Cover)
Comes pre-assembled from CNI and consists of:

- STP-12RING 3-pc. Compression Ring (ductile iron)
- STP-12 Sealing Rubber Ring (Buna N, rubber)
- 205P Top and Bottom section of containment (ductile iron); and
- CNI Mfg.STP-200, Snap-Tight Cover (was previously part number 200STC), (356-T6 Hard Coat Anodized Aluminum) Includes STP-4 Snap Tight Cover gasket (Buna N, rubber)
- CNI Mfg. 200JN, Jam Nut (hard coat anodized aluminum 356T6)

□ CNI Mfg. 214P-31103 (with Gravity Cover)
Comes pre-assembled from CNI and consists of:

- STP-12RING 3-pc. Compression Ring (ductile iron)
- STP-12 Sealing Rubber Ring (Buna N, rubber)
- 214P Top and Bottom section of containment (ductile iron); and
- CNI Mfg. GAC Gravity Cover (Ductile Iron) Includes GAC-GSK gasket (Buna N, rubber)
- CNI Mfg. 200JN, Jam Nut (hard coat anodized aluminum 356T6)

Continued on next page.

* CNI Mfg. Stand Alone/Direct Bury Configurations 205P, 205V, 214P and 214V are not certified for use in a sump configuration.

Exhibit 1 Listing Checklist (con't.)

Pressure/Vacuum Vent Valve	□ FFS PV-Zero □ Husky 5885
Gravity Cover (used for CON1, CON2 or 214 Containments)	□ CNI Mfg. GAC (Ductile Iron) Includes GAC-GSK gasket (Buna N, rubber)
Snap Tight Cover (CON1, CON2 or 205 containments)	□ CNI Mfg. STP-200 (was previously part number (used for 200STC) with (356-T6 Hard Coat Anodized Aluminum). Includes STP-4 Snap Tight Cover gasket (Buna N, rubber)
Snap Tight Cover Ring	□ CNI Mfg. STP-39 (ductile iron, gold anodized) (was previously part number STP-31) Includes STP-10 gasket (Buna N, rubber)
Drain Valve	□ CNI Mfg. RP12-Push
Dust Caps	□ CNI Mfg. 64 (product)(aluminum, powder coated) □ CNI Mfg. 611-VR-3 (vapor) (aluminum, powder coated) □ OPW 634LPC (product) □ OPW 1711LPC (vapor) □ CompX CSP1-634LPC (product) □ CompX CSP3-1711LPC (vapor) □ CompX CSP2-634LPC (product) □ CompX CSP4-1711LPC (vapor)
Dust Cap Gasket	□ CNI Mfg. 65 original, RP65 for replacement (vapor and product) (Buna N, rubber)
Product Adapter	□ Emco Wheaton Retail A0030-124 □ Emco Wheaton Retail A0030-124S
Vapor Adapter	□ Emco Wheaton Retail A0076-124 □ Emco Wheaton Retail A0076-124S
Jam Nut	□ CNI Mfg. 200JN (hard coat anodized aluminum 356T6)
Drop Tube[1] and **CNI Mfg. Drop Tube O-Ring**	□ CNI Mfg. DT100 (various lengths) □ CNI Mfg. DT101 (original), RP101 (replacement)
Drop Tube Overfill Prevention Valve[1]	□ EMCO Wheaton Retail A1100EVR Guardian Overfill (MUST be used with the EMCO Wheaton Retail #569461 O-Ring only)

Continued on next page.

[1] If these components are installed or required by regulations of other agencies, only those components and model numbers specified above shall be installed or used.

Exhibit 1 Listing Checklist (con't.)

Tank Gauge Port Components

□ Cap and Adapter set, CNI Mfg. 613BC (Die cast, Aluminum cap, modified p/n 64, and bronze casting Adapter p/n 613)

- Gasket, CNI Mfg. 65 original, RP65 for replacement, Buna N, rubber)
- O-Ring, CNI Mfg. 613GSK original (RP613GSK for replacement) (Buna N, rubber)
- Metal Connector, CNI Mfg. 613EF original (RP613EF for replacement)

Summary of Guidelines for Required Maintenance Activities [2]

Component	Interval	Maintenance to Perform
CNI Mfg. Spill Containers Vapor: 2 point EVR system: CON1 and CON2 Stand Alone/Direct Bury: 205 and 214	Annually	1. Clean the interior of the containers. 2. Remove any accumulated dirt and grit.
Drop Tube CNI Mfg. DT100	Annually	1. Perform ARB test TP201.1C. If the drop tube fails to meet the test requirements, replace the O-ring with a new one. Then re-test. 2. Inspect the drop tube to see if it is installed correctly. Check to ensure the highest point of the discharge opening of the drop tube is no more than 6 inches from the bottom of the tank. If the fillpipe has been removed for any reason, re-check to ensure that the discharge opening of the fillpipe is entirely submerged when the liquid level is six inches above the bottom of the tank. **NOTE**: DO NOT REMOVE the drop tube unless it fails TP201.1C. Use only CNI Mfg. O-ring P/N RP101 for replacement O-ring.
Drop Tube Overfill Prevention Device EMCO Wheaton Retail A1100EVR Guardian Overfill Prevention Valve	Annually	1. Look down the drop tube opening and see if the flapper in the drop tube is open. 2. Check to ensure the highest point of the discharge opening of the drop tube is no more than 6 inches from the bottom of the tank. If the fillpipe has been removed for any reason, re-check to ensure that the discharge opening of the fillpipe is entirely submerged when the liquid level is six inches above the bottom of the tank. 3. Perform ARB test TP201.1D. If the drop tube fails to meet the test requirements, replace the O-ring with a new one. Then re-test. 4. If the drain valve fails the test requirements, refer to the drain valve maintenance instructions in this table. 5. If the drop tube fails to meet the test requirements, replace the drop tube with a new one. Then re-test. **NOTE:** DO NOT REMOVE the drop tube unless it fails TP201.1D. Use only the EMCO Wheaton O-ring P/N 569461 for replacement O-ring.

[2] These maintenance requirements shall not circumvent use of the manufacturer's maintenance instruction. Maintenance contractors or owner/operators shall refer to the complete Installation and Maintenance Instructions found within this document for each manufacturer's component. Ensure that all maintenance and torque requirements are met. Maintenance must be conducted within the interval specified from the date of installation and at least within the specified interval thereafter.

Summary of Guidelines for Maintenance Activities Required [2]

Component	Interval	Maintenance to Perform
Drain Valve CNI Mfg. RP12-PUSH	Monthly	Anti-seize compound must be applied to the shaft at least once a month to prevent shaft from sticking. NOTE: Reference the exploded view of the drain valve in the maintenance/installation instructions in this manual for points that require anti-seize compound be applied ***each*** time the drain valve is removed.
	Every 18 months and If the drain valve fails ARB drop tube tests TP201.1C, or TP201.1D, or if valve causes failure of ARB pressure decay test TP201.3 a new gasket kit (DVK1) must be installed.	1. Unscrew the drain valve. 2. Unscrew the cap. 3. Remove screw and washer. 4. Pull the shaft. 5. Clean and check the screen, replace if it's damaged. 6. The O-ring needs to be replaced each time the drain valve is disassembled. 7. The plunger gasket needs to be replaced each time the drain is disassembled. 8. Clean all parts before reassembling, and ensure that anti-seize compound is applied to the components noted in exploded drawing in this manual. 9. To assemble, reverse the procedure. 10. Screw in the drain valve until bottomed out and then an additional 360 degree turn. 11. Screw the cap back on until finger tight. **NOTE:** CNI Mfg. gasket kit DVK1 includes a plunger gasket P/N RP12-9 and O-ring P/N RP12-7.

[2] These maintenance requirements shall not circumvent use of the manufacturer's maintenance instruction. Maintenance contractors or owner/operators shall refer to the complete Installation and Maintenance Instructions found within this document for each manufacturer's component. Ensure that all maintenance and torque requirements are met. Maintenance must be conducted within the interval specified from the date of installation and at least within the specified interval thereafter.

Summary of Guidelines for Maintenance Activities Required[2]

Component	Interval	Maintenance to Perform
Rotatable Product Adapter EMCO Wheaton A0030-124 A0030-124S	Annually and	1. Verify the static torque of the Adapters by performing ARB TP201.1B using CNI Mfg. Swivel Torque Test Tool P/N EVRSYS100. 2. If the Adapter fails to meet the test requirements, replace both O-rings per manufacturer's instructions in this manual. Then re-test. **NOTE:** For A0030-124 use EMCO Wheaton O-ring kit P/N 493995; For the A0030-124S use EMCO Wheaton O-ring kit P/N 494301.
	Annually	1. Verify the leak tightness integrity of the Adapters while performing ARB TP201.1C or TP201.1D on the drop tube(s). 2. If the Adapter fails to meet the test requirements, replace both O-rings and/or flat gasket per manufacturer's instructions in this manual. Then re-test. **NOTE:** For A0030-124 and 'S' series use EMCO Wheaton flat gasket kit P/N 409628; See previous NOTE for appropriate EMCO Wheaton O-ring kit part number.

[2] These maintenance requirements shall not circumvent use of the manufacturer's maintenance instruction. Maintenance contractors or owner/operators shall refer to the complete Installation and Maintenance Instructions found within this document for each manufacturer's component. Ensure that all maintenance and torque requirements are met. Maintenance must be conducted within the interval specified from the date of installation and at least within the specified interval thereafter.

Summary of Guidelines for Maintenance Activities Required[2]

Rotatable Vapor Adapter EMCO Wheaton A0076-124 A0076-124S	Annually and Annually	1. Verify the static torque of the Adapters by performing ARB TP201.1B using CNI Mfg. Swivel Torque Test Tool P/N EVRSYS100. 2. If the Adapter fails to meet the test requirements, replace both O-rings. Then re-test. **NOTE:** For A0076-124 use EMCO Wheaton O-ring kit P/N 493995; For the A0076-124S use EMCO Wheaton O-ring kit P/N 494301. 1. Verify the leak tightness integrity of the Adapters by performing ARB TP201.3. 2. If the Adapter fails to meet the test requirements, replace both O-rings and/or flat gasket per manufacturer's instructions in this manual. Then re-test. **NOTE:** For A0076-124 and 'S' series, use EMCO Wheaton flat gasket kit P/N 409628; See previous NOTE for appropriate EMCO Wheaton O-ring kit part number.
Tank Gauge Cap and Adapter CNI Mfg. 613BC	Annually and If the cap or Adapter causes failure of ARB pressure decay test TP201.3.	1. Inspect the gasket in the cap. If the gasket is worn or the cap spins freely on the Adapter, replace the gasket with a new one using gasket P/N RP65. 2. If the leak is coming from the Adapter you must replace the O-ring with a new one using O-Ring P/N RP613GSK. 3. If the leak is coming from the strain relief connector you must replace with a new one using P/N RP613EF. 3. **NOTE:** This Adapter must be torqued to 35 foot-pounds using CNI Mfg. 613B Adapter Installation/Removal Tool p/n EVRSYS128.

[2] These maintenance requirements shall not circumvent use of the manufacturer's maintenance instruction. Maintenance contractors or owner/operators shall refer to the complete Installation and Maintenance Instructions found within this document for each manufacturer's component. Ensure that all maintenance and torque requirements are met. Maintenance must be conducted within the interval specified from the date of installation and at least within the specified interval thereafter.

Summary of Guidelines for Maintenance Activities Required[2]

Component	Interval	Maintenance to Perform
Dust Caps CNI Mfg. 64 and 611-VR-3	Annually	1. Inspect the gasket in the cap. If gasket is worn or the cap spins freely on the Adapter, replace the gasket with a new one using replacement gasket P/N RP65.
Dust Caps "All Non-CNI Models"	Annually	1. Visually inspect the seal in cap and replace if damaged or missing.
Pressure/Vacuum Vent Valve Husky Model 5885	Annually	1. Remove screws that hold top cover on. 2. Remove any debris that might be sitting inside the lower cover. 3. Check the drain holes in the lower cover for blockage. 4. Do not remove the two (2) screens. 5. Reinstall the top cover and retaining screws. 6. Tighten the screws firmly. **NOTE:** Do not alter or cover the P/V vent.
Pressure/Vacuum Vent Valve FFS Model PV-Zero	Annually	1. Visual inspect housing, pipe, fittings and rain cap for obvious signs of damage, missing parts or fluid leaks. 2. Visually inspect the rain cap, from ground level, for signs of birds nests or insect activity. 3. Every **year**, drain and inspect the fill fluid per the **Fluid Inspection Procedure**.

[2] These maintenance requirements shall not circumvent use of the manufacturer's maintenance instruction. Maintenance contractors or owner/operators shall refer to the complete Installation and Maintenance Instructions found within this document for each manufacturer's component. Ensure that all maintenance and torque requirements are met. Maintenance must be conducted within the interval specified from the date of installation and at least within the specified interval thereafter.

Phase I EVR Equipment Installation Check List for Installing Products per ARB Executive Order VR-104-F

Street Address: Business Address:

City/State: City/State:

Contact/Phone: Contact/Phone:

Installing Technician (name): Technician Certification Number:

Tank Number:_____ Product Grade: _____ Capacity:_____

Tank Number:_____ Product Grade: _____ Capacity:_____

Tank Number:_____ Product Grade: _____ Capacity:_____

Note: Because this checklist serves a dual purpose as an installation and retrofit checklist, there are some items that will be non-applicable (*e.g.* cutting riser pipe). The technician should note **'N/A'** for Non-Applicable in the 'Yes/No' box.

Yes/No	Initials	
Yes/No	Initials	1. Is all of the installed equipment for Phase I EVR listed in ARB Executive Order (E.O.) VR-104-F? **Note: All Phase I EVR installed equipment must be listed in E.O. VR-104-F**.
Yes/No	Initials	2. Have all the 4 inch tank risers been cut to the correct lengths and have a flat, square cut across the top of the riser, as well as the appropriate threads cut into the ends of each?
Yes/No	Initials	3. Are all 4 inch tank risers correctly installed into the tank bungs and the extractors using a Fire Marshall approved thread sealing compound and torque to 250-350 foot-pounds?
Yes/No	Initials	4. Fill Riser – Is the CNI DT100 drop tube(s) installed correctly with the CNI DT101 (or RP101) O-ring securely in place and the flared end on top of the riser? **Note: CNI's drop tube must be cut to the correct length and angle, and assembled before installing into the 4 inch tank riser.**

Continued on next page.

Phase I EVR Equipment Installation Check List for Installing Products per ARB Executive Order VR-104-E (continued)

Yes/No	Initials	5. Fill Riser – Is the EMCO Wheaton Retail A1100EVR Guardian Overfill Prevention Valve installed with the correct EMCO Wheaton O-ring securely in place and the flared end of tube on top of the riser? (New installation and replacement O-ring are #569461.) Note: The EMCO Wheaton Retail A1100EVR Guardian Overfill Prevention Valve must be cut to the correct length and assembled per manufacturer's instructions before installing into the 4 inch tank riser.
Yes/No	Initials	6. Are the Containment Assemblies installed onto the 4 inch tank risers using a Fire Marshall approved thread sealing compound on the upper male threads of the 4 inch riser pipe and torqued to: • the indicated torque value from Table 1 and 2 for CON1-31103 and CON2-31103 containments; • the indicated torque value from Table 3 and 4 for 205X-31103 and 214X-31103 containments?
Yes/No	Initials	7. Is the Jam Nut(s) installed in the lower set of threads of the Fil-Spil oval flange (CON2-31103), or the bottom section of 205P-31103 or 214P-31103 containment, and torqued down on top of the drop tube flare to 45 foot-pounds?
Yes/No	Initials	8. Have the 4 inch Containment Nipple(s) been cut to the correct lengths and have a flat, square cut across the top of each end, as well as the appropriate threads cut into the ends of each?
Yes/No	Initials	8.a. Have the 4 inch Containment Nipple(s) been installed into the appropriate flanges using a Fire Marshall approved thread sealing compound on the lower male threads of the 4 inch Containment Nipple and torqued to 170-175 foot-pounds?
Yes/No	Initials	9. Are the appropriate Product and Vapor Swivel Adapters (p/n A0030-124S and A0076-124S, or A0030-124 and A0076-124) installed onto the 4 inch containment nipple(s) with the flat gaskets in place, and torqued to 35 foot-pounds?
Yes/No	Initials	9.a. Are the Product Swivel Adapters (p/n A0030-124S or A0030-124) and Vapor Swivel Adapters (p/n A0076-124S or A0076-124) set screws installed with LocTite #222MS and torqued to 20 inch-pounds?
Yes/No	Initials	10. Are the CNI Mfg. Dust Caps (p/n 64 product, and 611-VR-3 vapor) and CNI Mfg. Gaskets (p/n 65) installed onto the appropriate Swivel Adapters?
Yes/No	Initials	11. Are the drain valve(s) installed and bottomed out, then turned an additional 360°degrees with the cap screwed back on until finger tight?
Yes/No	Initials	12. For CON1-31103 and CON2-31103 containments: Are the six bolts for the 3 Piece Bellows Hold Down Clamp (p/n STP-33) torqued to 10 foot-pounds?

Continued on next page.

Phase I EVR Equipment Installation Check List for Installing Products per ARB Executive Order VR-104-E (continued)

Yes/No	Initials	13. For 205X-31103 or 214X-31103 containments: Are the six bolts for the 3 Piece Compression Ring (p/n STP-12RING) torqued to 3 foot-pounds?
Yes/No	Initials	14. Tank Gauge Port Cap and Adapter (if installed): Has the Tank Gauge Adapter (p/n 613BC) been installed onto the 4 inch tank riser with it's gasket (p/n 65 or RP65) and O-ring (p/n 613GSK or RP613GSK)?
Yes/No	Initials	15. Has the Tank Gauge Adapter (p/n 613BC) been manually tightened onto the 4 inch N.P.T. tank riser then torqued to 35 foot-pounds using CNI Mfg. 613B Adapter Installation/Removal Tool p/n EVRSYS128?
Yes/No	Initials	15a. Are the set screws fully tightened and the gauge wire installed into the strain relief cord connector in the cap?
Yes/No	Initials	15b. Is the metal nut tightened to ensure no vapor leakage?
Yes/No	Initials	15c. Is the cap handle snapped tight after installing the cap onto the Adapter?
Yes/No	Initials	16. Pressure Vacuum Vent Valve– Is there an P/V vent valve installed on the top of each (gasoline) vent pipe or manifold? (A maximum of three EVR P/V valves per GDF.)
Yes/No	Initials	16a. Has/Have the P/V vent valve(s) been installed using the manufacturers recommended installation torque?

Torque Values for Installation using 2 Point Systems CON1-31103 and CON2-31103

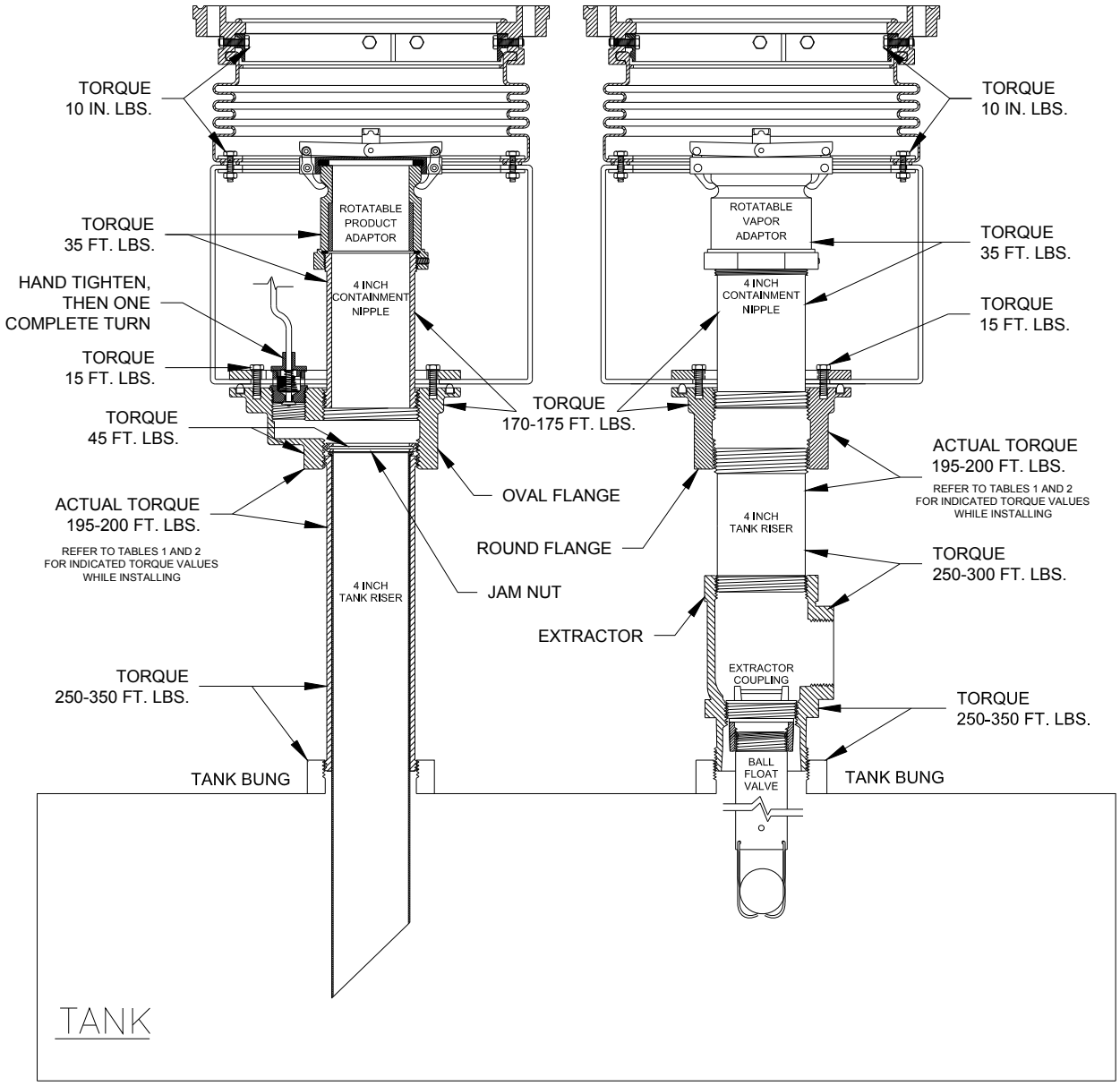

Torque Values for Installation using Stand Alone/Direct Bury Systems 205V-31103 and 205P-31103

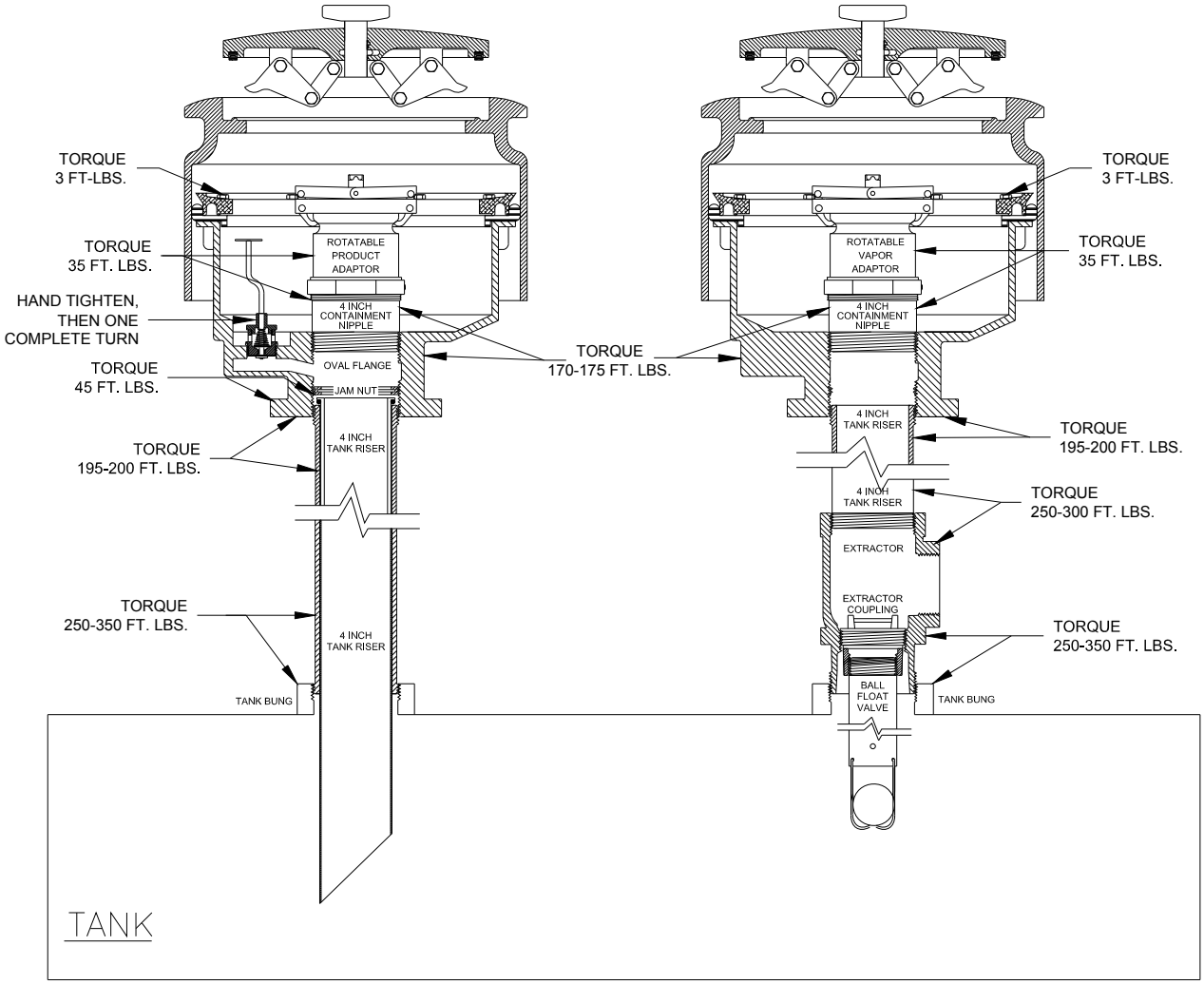

Torque Values for Installation using Stand Alone/Direct Bury Systems 214V-31103 and 214P-31103

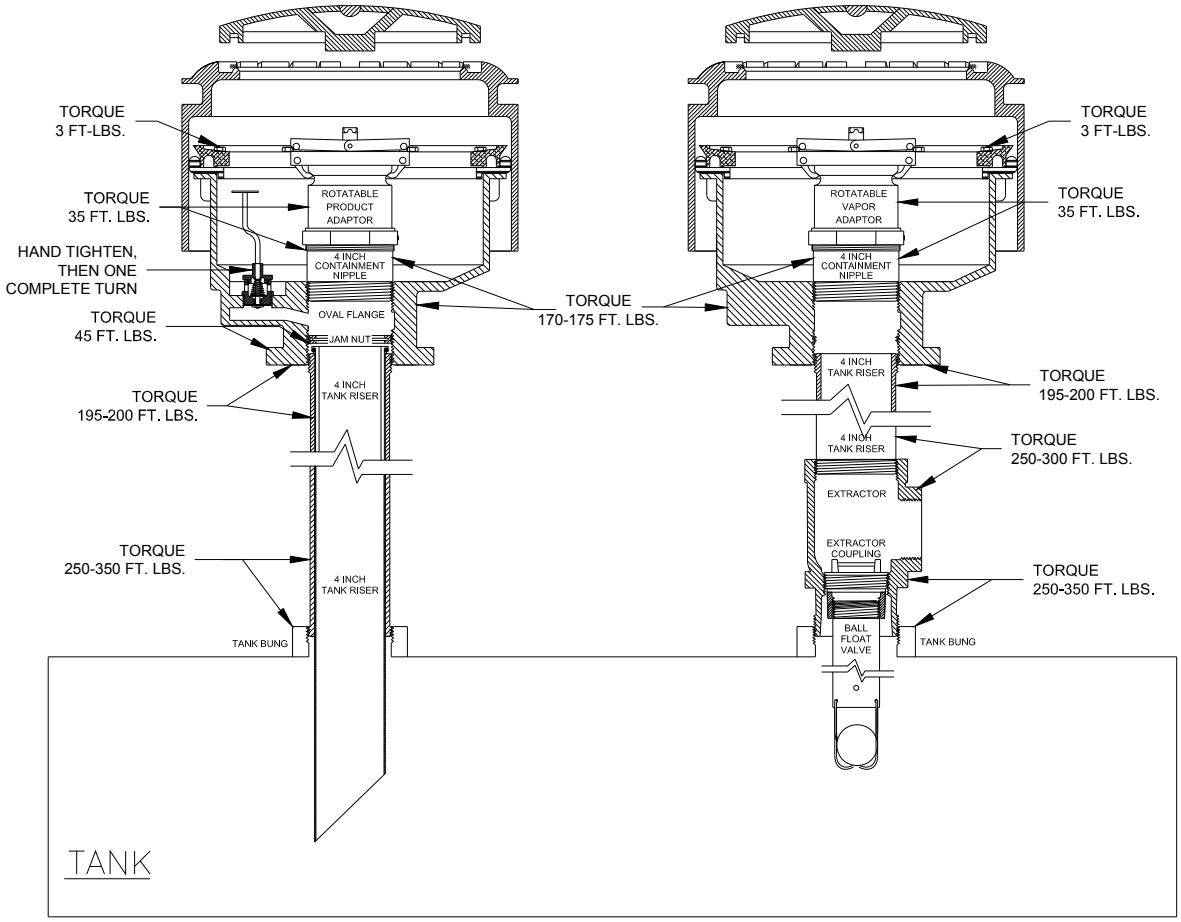

Pre-Assembly Notes for a 2 Point EVR System, Vapor Side using CON1-31103

Prior to installation ensure that you have:

- a T-square or bevel square set to 90º to verify squareness of riser and containment nipple;
- CNI Mfg. Containment Installation/Removal Tool EVRSYS116, or Standard chain wrench with offset;
- 26 inch or 36 inch long torque wrenches capable of measuring from 10 to 350 foot-pounds as appropriate;
- a torque wrench capable of measuring 10 to 20 inch-pounds (used for Bellow Hold Down Clamps, and set screws on Adapter) ;
- a 5/32nd inch Allen® wrench head torque Adapter (used for set screws on 'S' series Adapter);
- a flathead torque adapter or appropriately sized torque driver (used for set screws on 'non- S' series Adapter;
- standard ½ inch socket;
- standard 7/16ths inch socket;
- CNI Mfg. Rotatable Adapter Tool Part Number EVRSYS106;
- Loc-Tite® threadlock model #222MS,
- Teflon®, Fire Marshall approved thread sealing compound;
- Roller style, 2-blade pipe cutter,
- Cutting tool (die) for tapered N.P.T. threads on 4 inch pipes (8 threads per inch).

- Use ONLY the correct tools and torque wrenches for a correct installation.
- Use appropriate safety measures, to avoid fire and personal injury.
- Inspect the components for damage.

Note: Do not disassemble the containment assembly unless replacing a component of assembly. It is shipped ready to install.

Table 1
CON1-31103 Vapor Side Torque Values

Interface Description	Torque Specifications		Special Tool Needed
4 inch Tank Riser to Tank Bung	250-350 ft-lbs.		No, Standard chain wrench with offset.
STP-24, Round Flange to 4 inch Tank Riser	Actual Torque 195-200 ft-lbs.	See Note in next column for indicated torque value when using EVRSYS116 tool	Yes, CNI Mfg. Containment Installation/Removal Tool P/N EVRSYS116, or a Standard chain wrench with offset. Note: When using the EVRSYS116 tool, you must torque to an indicated value on wrench of: 153-157 foot-pounds for 26 inch torque wrench, or 163-167 foot-pounds for 36 inch torque wrench.

(Continued on next page.)

Table 1
CON1-31103 VaporSide Torque Values (continued)

Interface Description	Torque Specifications	Special Tool Needed
STP-18, Round Flange Compression Ring connecting Spill Container to Round Flange	15 ft-lbs.	No, Standard 1/2 inch socket and torque wrench.
4 inch Containment Nipple to Round Flange	170-175 ft-lbs.	No, Standard chain wrench with offset.
A0030-124 and A0030-124S EMCO Wheaton Rotatable Vapor Adapter to 4 inches Containment Nipple	35 ft-lbs	Yes, CNI Mfg. Rotatable Adapter Tool #EVRSYS106.
STP-33, 3 pc. Bellows Hold Down Clamps to Snap-tight ring	10 in-lbs.	No, Standard 7/16ths inch socket and torque wrench.
Two set screws for the A0076-124S EMCO Wheaton Rotatable Vapor Adapter; or three screws for the A0076-124 EMCO Wheaton Rotatable Vapor Adapter.	20 in-lbs.	Yes, 5/32nd inch Allen® wrench head Adapter for torque wrench if using the 'S' series adapter. A flathead Adapter for torque wrench or an appropriately sized torque driver when using the 'non-S' series Adapter.

Figure A-1
Typical Vapor Containment (CON1-31103)

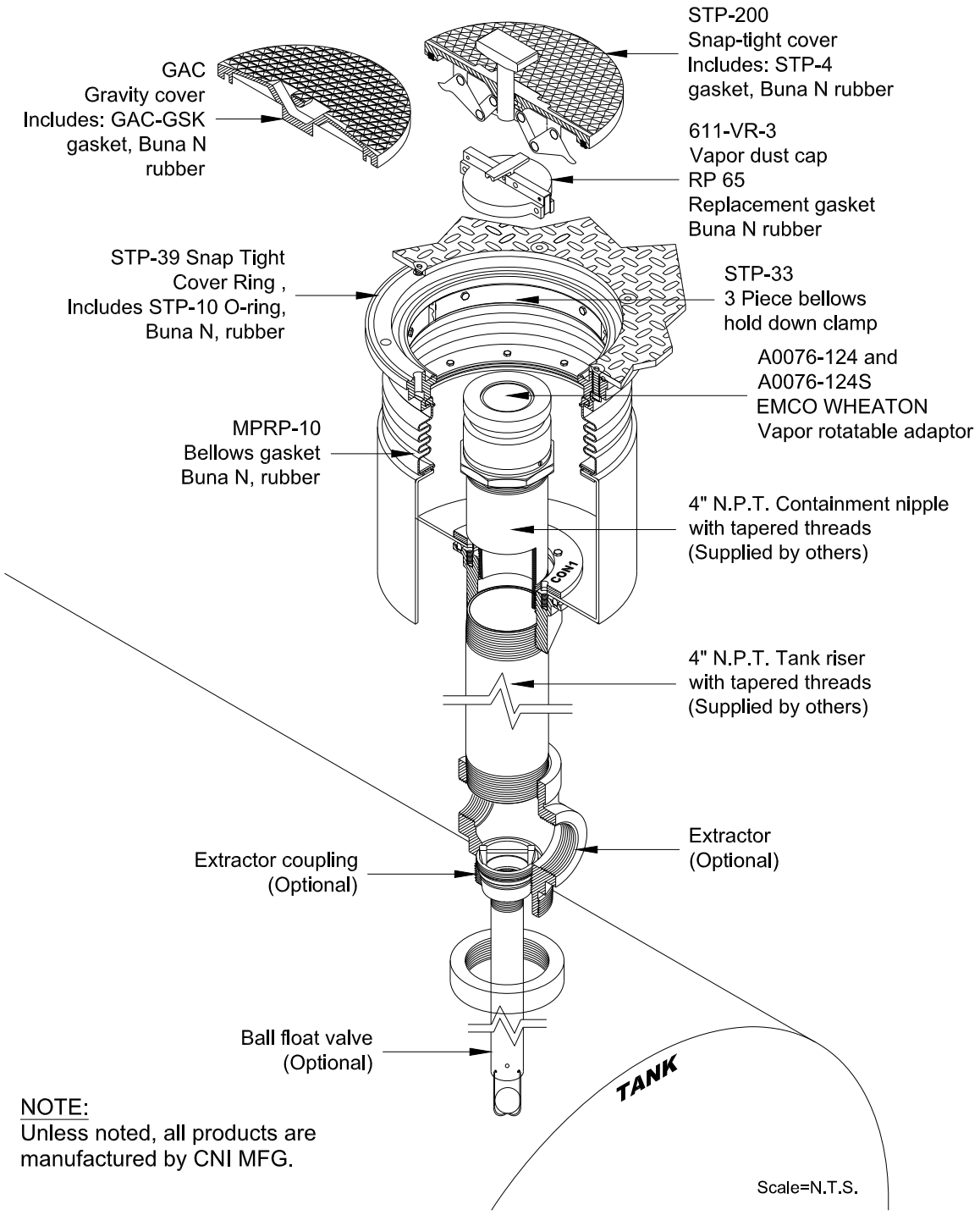

NOTE:
Unless noted, all products are manufactured by CNI MFG.

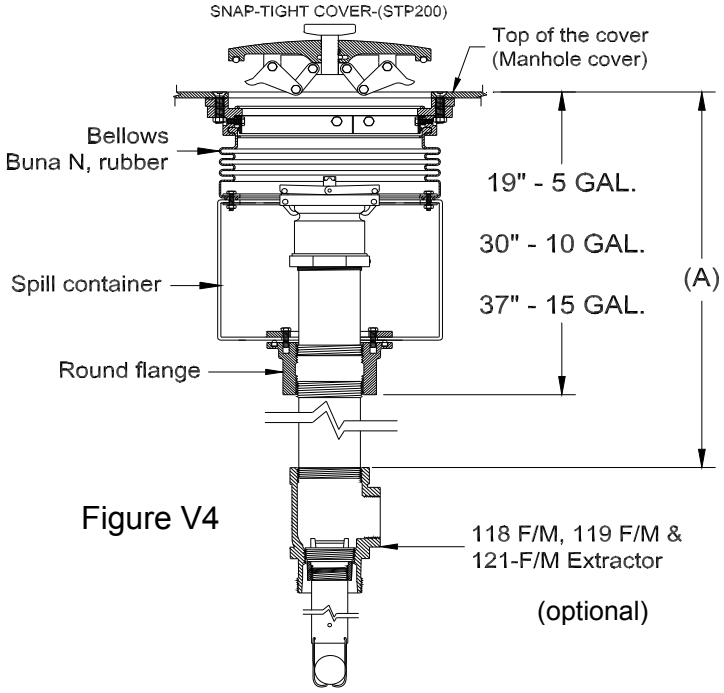

Figure V4

DO NOT USE HACKSAW TO CUT RISER PIPE.

1) <u>Cut the 4 inch Vapor Riser to Length and Install</u>

a) The length of the 4 inch vapor riser pipe will vary depending upon the size of the vapor spill container and the depth of the underground storage tank. To determine the length of the vapor riser pipe, measure the distance (dimension A) from the top of the manhole cover to the top of the tank bung, T-fitting or extractor (see Fig. V4).

b) Deduct 19 inches (plus or minus ½ inch) for the five (5) gallon vapor spill containers.
Deduct 30 inches (plus or minus ½ inch) for the ten (10) gallon vapor spill containers.
Deduct 37 inches (plus or minus ½ inch) for the fifteen (15) gallon vapor spill containers.

c) Once the proper vapor riser length is established, use a roller style, 2-blade pipe cutter to ensure a flat square cut across the top of the riser. Verify squareness with a T-square or bevel square.

d) Cut tapered N.P.T. threads on both ends of the 4 inch vapor riser pipe for a minimum length of 1 1/8 inches.

e) Ensure that a square, flush, smooth, sealing surface is achieved across the top of the riser. De-burr and clean riser threads.

f) Apply a Teflon®, Fire Marshall approved thread sealing compound on the lower male threads of the 4 inch riser pipe. Manually tighten the riser pipe into tank bung, T-fitting or extractor, then torque to value specified in Table 1.

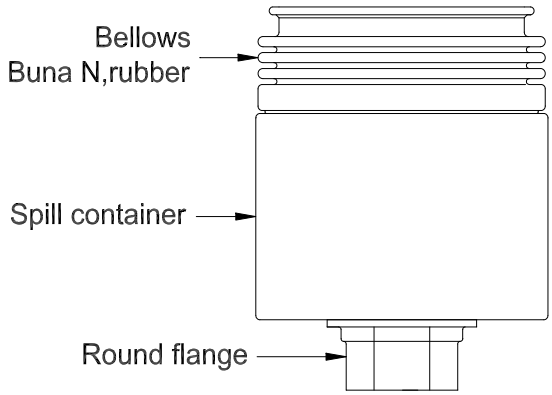

(Figure V5)

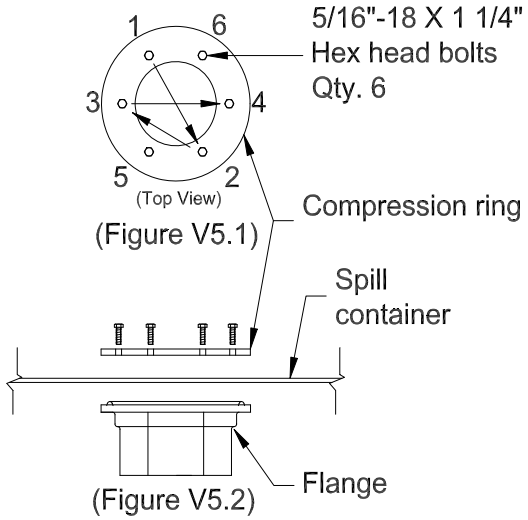

(Figure V5.1)

(Figure V5.2)

NOTE: The containment assembly is pre-assembled for ease of installation as shown above. (Components of CON1-31103 are listed in the Exhibit 1 checklist contained in this Manual.)

2) Install Preassembled Vapor Containment Assembly (CON1-31103)

a) Apply a Teflon®, Fire Marshall approved thread sealing compound on the upper male threads of the 4 inch riser pipe.

b) Manually tighten the complete vapor containment assembly (CON1-31103) (Fig. V5) onto the 4 inch riser pipe.

c) Use either the CNI Mfg. Containment Installation/Removal Tool (p/n EVRSYS116), or a chain wrench with offset, and torque the round flange onto the 4 inch riser to value specified in Table 1.

(NOTE: If the spill container must be removed from the round flange in order to properly torque the flange onto the 4 inch tank riser proceed to following steps i, ii, and iii.)

i) Inside the spill container there are six (6) hex head bolts and a compression ring that must be removed (See Fig. V5.1). Once removed, lift the spill container to expose the round flange beneath.

ii) If using the CNI Mfg. Containment Installation/Removal Tool (p/n EVRSYS116) torque the containment assembly and round flange onto the 4 inch riser to the value specified in Table 1. If a chain wrench with an offset is used, torque round flange onto the 4 inch tank riser to the value specified in Table 1.

iii) Line up the spill container on the round flange, and then align the compression ring with the holes in the round flange (See Fig. V5.2) and manually tighten the hex head bolts. Torque a little at a time in a cross over pattern for a correct seal, until you achieve 15 foot-pounds for each bolt (See Fig. V5.1).

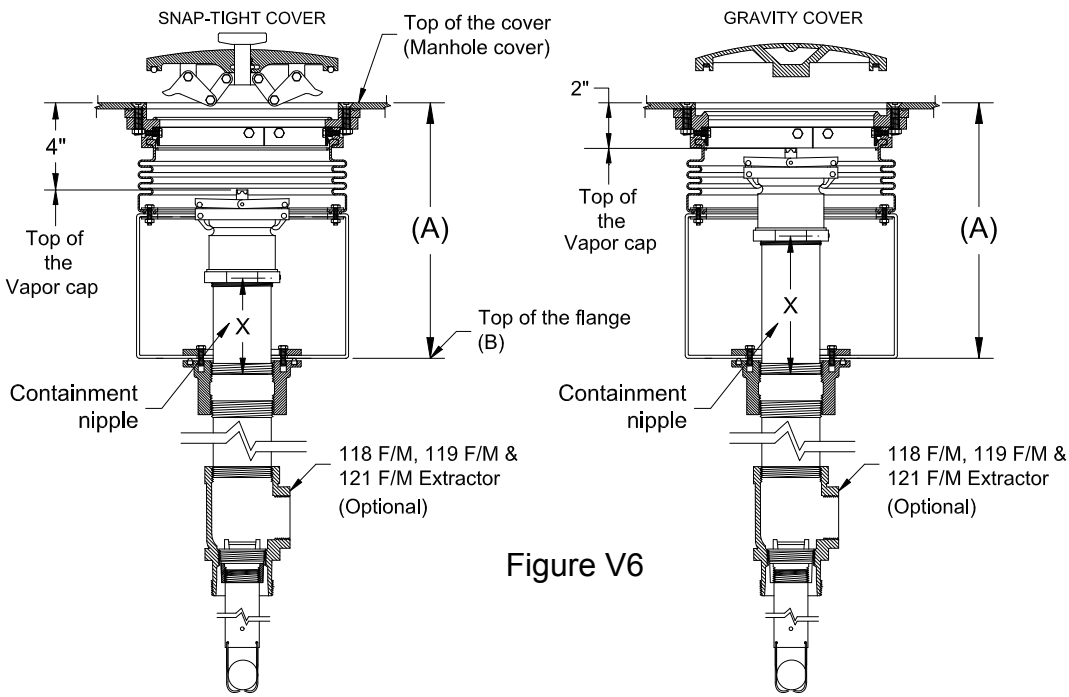

Figure V6

3) Determine the Length of the 4 inch N.P.T Containment Nipple

Refer to Fig. V6 and follow Equation 1 given on this page:

a) Measure the distance from the top of the manhole cover to the top of the flange (dimension A).
b) From that deduct 4 inches for the depth of the Snap-Tight Cover, or 2 inches for the depth of the Gravity Cover (dimension Y).
c) From that total, you would then deduct 6 5/16 inches for the A0076-124; or 6 1/2 inches for the A0076-124S vapor rotatable Adapter and cap (dimension Z).
d) Finally add 1 ¼ inches for the threads.
e) The final number is the required length of the containment nipple (dimension X).

$$\text{Equation 1: } X = ((A - Y) - \mathrm{Z}) + 1\tfrac{1}{4}$$

X = containment nipple length, inches

A = distance from the top of oval flange to the top of manhole cover, inches

$Y = 4$ if using Snap-Tight Cover; 2 if using Gravity Cover, inches

Z = combined length of vapor rotatable adaptor and dust cap, inches

$1\tfrac{1}{4}$ = thread length, inches

4) Cut the 4 inch N.P.T Containment Nipple to Length and Install

DO NOT USE HACKSAW TO CUT CONTAINMENT NIPPLE.

a) Once the proper nipple length is established, use a roller style, 2-blade pipe cutter to ensure a flat square cut across the top of the nipple. Verify squareness with a T-square or bevel.

b) Cut tapered N.P.T. threads on both ends of the 4 inch nipple for a minimum length of 1 1/8 inches.

c) Ensure that a square, flush, smooth, sealing surface is achieved across the top of the nipple. De-burr and clean nipple threads.

d) Apply Teflon®, Fire Marshall approved thread sealing compound on the lower threads of the 4 inch containment nipple.

e) Manually tighten the containment nipple into the round flange, then torque to value specified in Table 1.

5) Install Rotatable Vapor Adapter

a) Install the rotatable vapor Adapter according to the manufacturer installation instructions that are included in this manual.

Note: CNI Mfg. tool part number (p/n) EVRSYS106 must be used to achieve the correct torque when installing the Emco Wheaton Retail Rotatable Adapter onto the containment nipple. This tool is ordered separately.

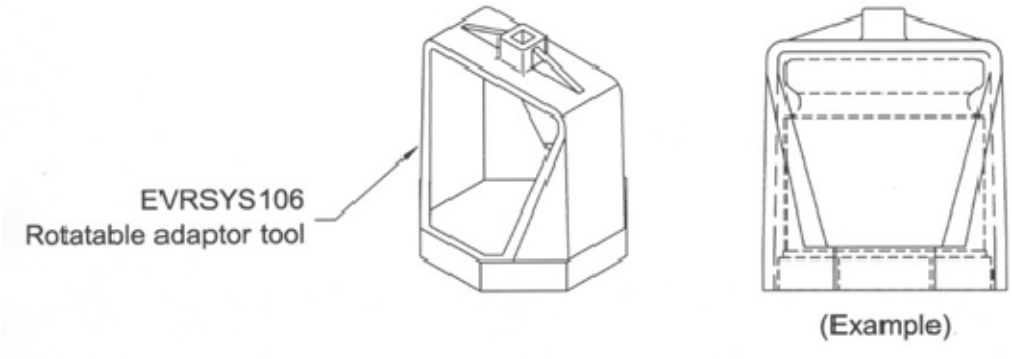

6) Install the bellows assembly and manhole cover

a) Grasping the MPRP-10 Bellows of CON1, reach into the containment area and work the bellows bead (A) into the groove (B) of the cover ring. (Refer to Fig. V9 on this page.)

b) Line up the 3-piece bellows hold down clamp (C), screw in the six (6) ¼ inch-10 x ¾ inch bolts until hand tight. Using a 7/16ths inch socket and an appropriate torque wrench, torque each of the bolts to value specified in Table 1.

c) Use two people to pick up the floor plate cover and align with containment area. Finish installation of floor plate per manufacturers' directions (not included in this document.)

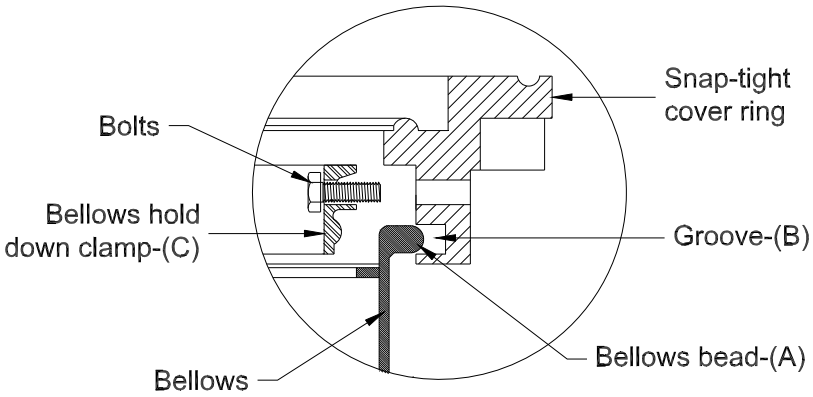

(Figure V9)

Pre-Assembly Notes for a 2 Point EVR System, Product Side Using CON2-31103

Prior to installation ensure that you have:

- a T-square or bevel square set to 90º to verify squareness of riser and containment nipple;
- CNI Mfg. Containment Installation/Removal Tool EVRSYS116, or Standard chain wrench with offset;
- 26 inch or 36 inch long torque wrenches capable of measuring from 10 to 350 foot-pounds as appropriate;
- a torque wrench capable of measuring 10 to 20 inch- pounds (used for Bellow Hold Down Clamps, and set screws on Adapter) ;
- a standard ½ inch socket;
- a standard 7/16ths inch socket;
- CNI Mfg. Jam Nut Installation Tool Part Number P/N EVRSYS112;
- CNI Mfg. Rotatable Adapter Tool P/N EVRSYS106;
- a 5/32nd inch Allen® wrench head torque Adapter (used for set screws on 'S' series Adapter);
- a flathead torque adapter or appropriately sized torque driver (used for set screws on 'non-S' series Adapter;
- Loc-Tite® model #222MS;
- Teflon®, Fire Marshall approved thread sealing compound;
- Roller style, 2-blade pipe cutter;
- Die capable of cutting 8 threads per inch, tapered N.P.T. into 4 inch outside diameter pipe.

- Use ONLY the correct tools and torque wrenches for a correct installation.
- Use appropriate safety measures, to avoid fire and personal injury.
- Inspect the components for damage.

Note: In the preassembled CON2-31103, the Jam Nut is already located in the oval flange for ease of installation. Do not disassemble the containment assembly unless replacing a component of assembly. It is shipped ready to install.

Table 2
CON2-31103 Product Side Torque Values

Interface Description	Torque Specifications		Special Tool Needed
4 inch Tank Riser to Tank Bung	250-350 ft-lbs.		No, Standard chain wrench with offset.
STP-22, Oval Flange to 4 inch Tank Riser	Actual Torque 195-200 ft-lbs.	See Note in next column for indicated torque value when using EVRSYS116 tool	Yes, CNI Mfg. Containment Installation/Removal Tool P/N EVRSYS116, or a Standard chain wrench with offset. Note: When using the EVRSYS116 tool, you must torque to an indicated value on wrench of: 153-157 foot-pounds for 26 inch torque wrench, or 163-167 foot-pounds for 36 inch torque wrench.

(Continued on next page)

Table 2
CON2-31103 Product Side Torque Values (continued)

Interface Description	Torque Specifications	Special Tool Needed
STP-17, Oval Flange Compression Ring connecting Spill Container to Oval Flange	15 ft-lbs.	No, Standard 1/2 inch socket and torque wrench.
200JN, Jam Nut to Oval Flange	45 ft-lbs.	Yes, CNI Mfg. Jam Nut Installation Tool # EVRSYS112.
4 inch Containment Nipple to Oval Flange	170-175 ft-lbs.	No, Standard chain wrench with offset.
A0030-124 and A0030-124S EMCO Wheaton Rotatable Product Adapter to 4 inches Containment Nipple	35 ft-lbs	Yes, CNI Mfg. Rotatable Adapter Tool #EVRSYS106.
STP-33, 3 pc. Bellows Hold Down Clamps to Snap-tight ring	10 in-lbs.	No, Standard 7/16ths inch socket and torque wrench.
Two set screws for the A0076-124S EMCO Wheaton Rotatable Vapor Adapter; or three screws for the A0076-124 EMCO Wheaton Rotatable Vapor Adapter.	20 in-lbs.	Yes, 5/32nd inch Allen® wrench head Adapter for torque wrench if using the 'S' series adapter. A flathead Adapter for torque wrench or an appropriately sized torque driver when using the 'non-S' series Adapter.
RP12-Push, Drain Valve Assembly to Spill Container	Bottom out, then an additional 360º turn.	No.

Figure A-2
Typical Installation for a 2 Point System using Product Containment CON2-31103 and CNI Mfg. DT100 Drop Tube

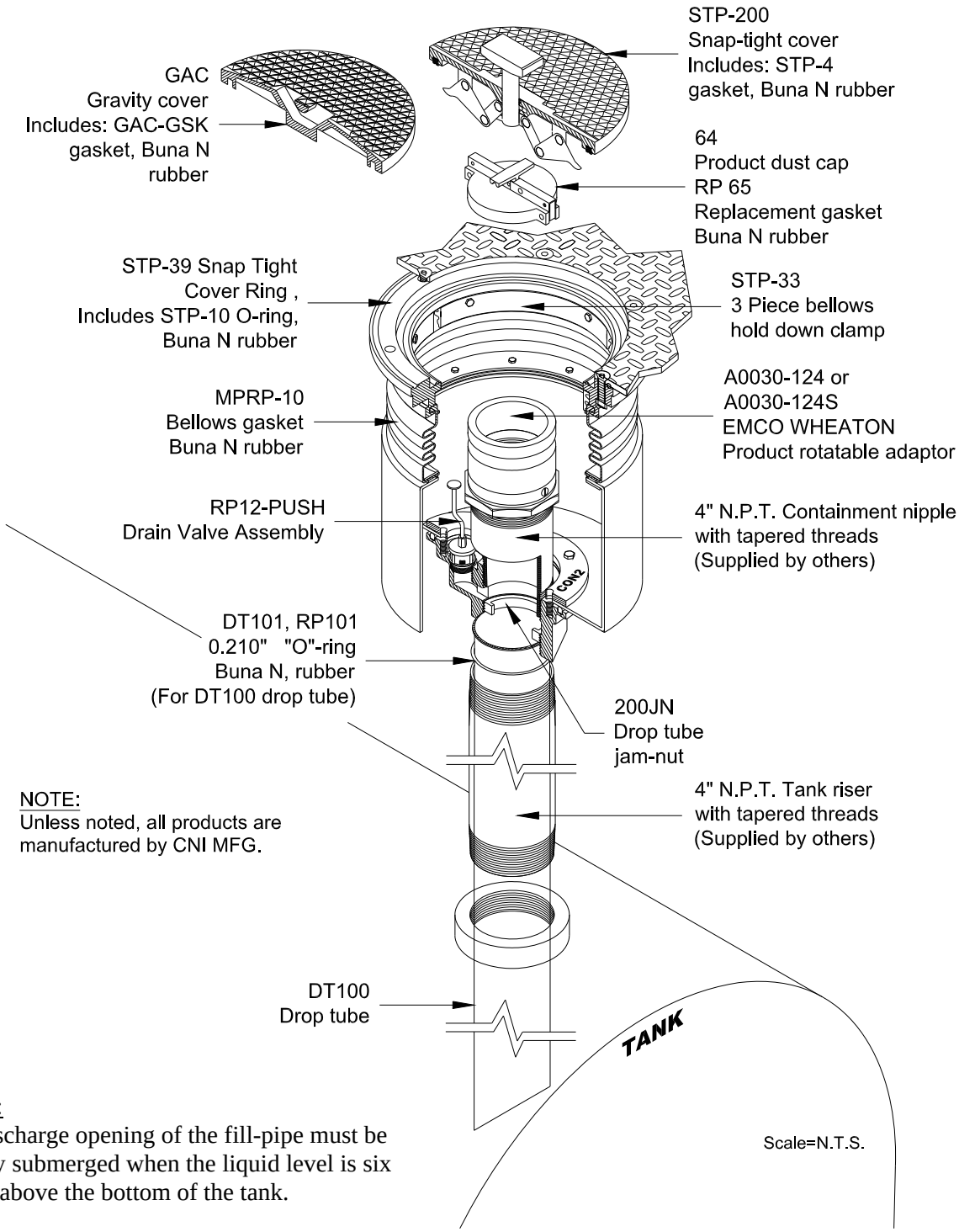

NOTE:
Unless noted, all products are manufactured by CNI MFG.

NOTE:
The discharge opening of the fill-pipe must be entirely submerged when the liquid level is six inches above the bottom of the tank.

Figure A-3
Typical Installation for a 2 Point System, using Product Side Spill Containment CON2-31103 and EMCO Wheaton A1100EVR Guardian Overfill Prevention Valve

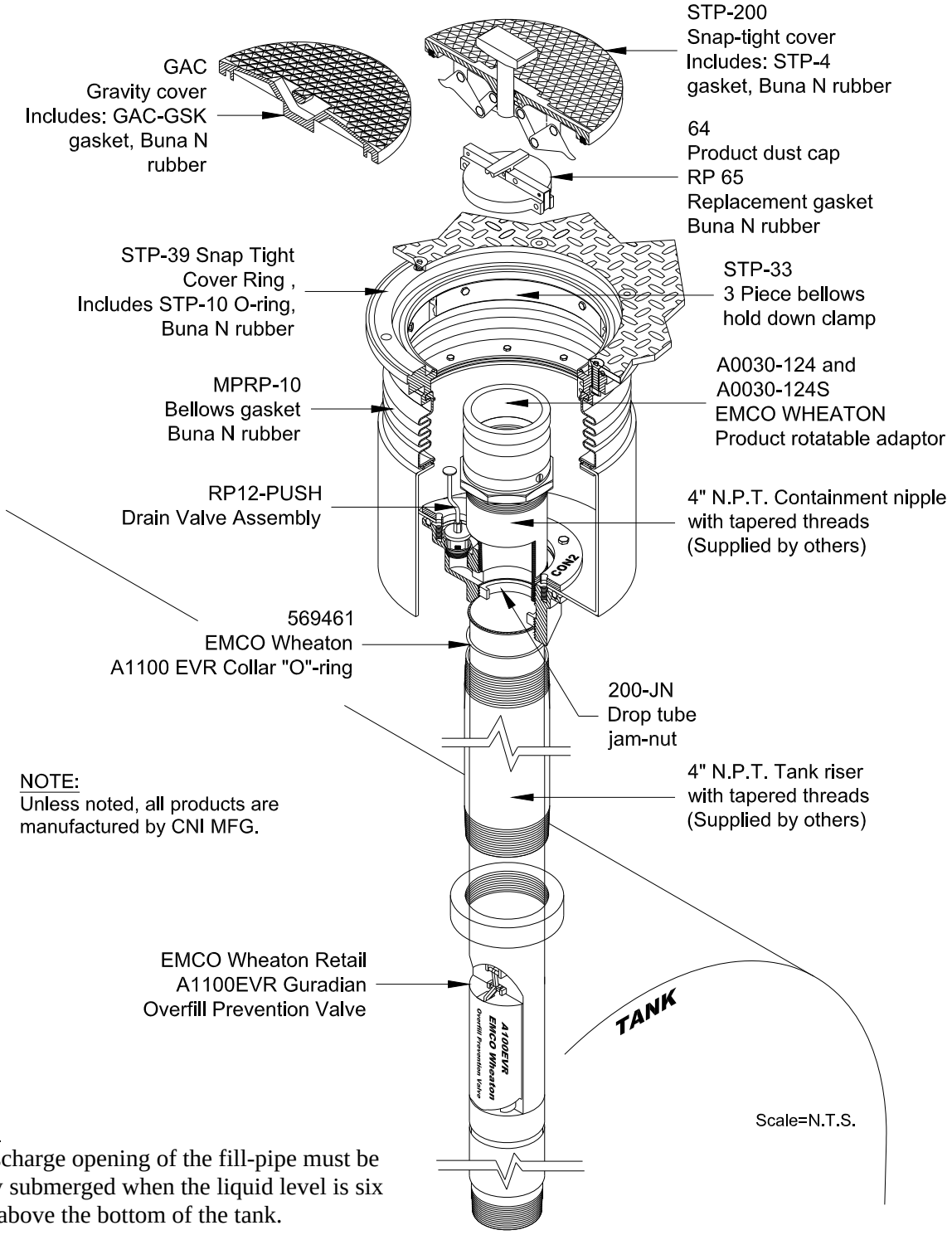

NOTE:
Unless noted, all products are manufactured by CNI MFG.

NOTE:
The discharge opening of the fill-pipe must be entirely submerged when the liquid level is six inches above the bottom of the tank.

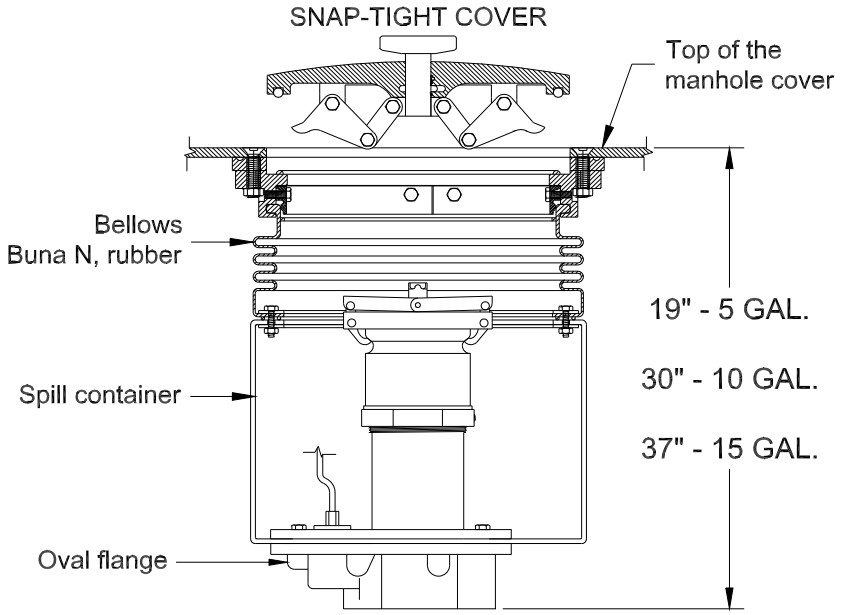

Figure P1

1) <u>Cut the 4 inch N.P.T. Product Riser Pipe to Length and Install</u>

a) The length of the product riser pipe will vary depending upon the size of the spill container and the depth of the underground storage tank. Regardless of these variables, the product riser pipe must be cut such that the distance from the top of the product tank riser to the finish grade is 19 inches (plus or minus ½ inch) for the 5-gallon product spill container; 30 inches (plus or minus ½ inch) for the ten (10) gallon product spill container; and <u>37 inches (plus or minus ½ inch) for the fifteen (15) gallon product spill containers</u>.

b) To determine the length of the product riser pipe, measure the distance from finish grade to the top of the tank bung. Deduct:
19 inches (plus or minus ½ inch) for the five (5) gallon vapor spill containers.
30 inches (plus or minus ½ inch) for the ten (10) 15 gallon vapor spill containers.
37 inches (plus or minus ½ inch) for the fifteen (15) gallon vapor spill containers.

b) Once the proper riser length is established, use a roller style, 2-blade pipe cutter to ensure a flat square cut across the top of the product riser. *DO NOT USE A HACKSAW TO CUT RISER PIPE RISER*. Verify squareness with a T-square or bevel.

d) Cut tapered N.P.T. threads on both ends of the product riser for a minimum length of 1 1/8 inches.

e) Ensure that a square, flush, smooth, sealing surface is achieved across the top of the product riser pipe. De-burr and clean riser threads.

f) Apply a Teflon®, Fire Marshall approved thread sealing compound on the lower male threads of the 4 inch product riser pipe. Manually tighten the product riser pipe into tank bung, then torque to value specified in Table 2.

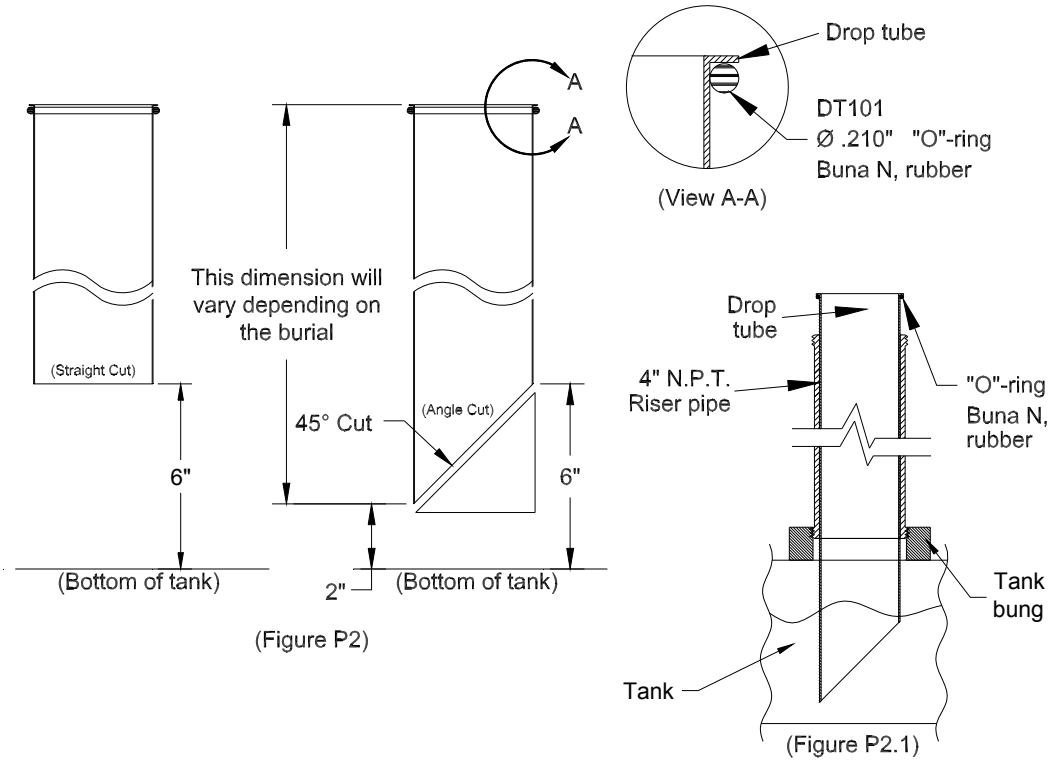

2) Install the Drop Tube following the appropriate drop tube installation instructions.

For the DT100 Installation: **(NOTE: Installation instructions for the EMCO Wheaton A1100EVR Guardian are found elsewhere in this manual):**

a) Measure the distance between the top of the product riser pipe and the bottom of the tank.

b) Cut the solid drop tube at a 45º angle, 6 inches from the extreme top cut, to the bottom of the tank. For a straight cut, the dimension should also be 6 inches from the bottom of the drop tube to the bottom of the tank – (See Fig. P2). Cut the drop tube to the referenced dimension using a hacksaw equipped with a fine tooth blade.

NOTE: For an angle cut, the drop tube may not exceed 2 inches from the bottom of the tank.

c) Carefully remove all cutting burrs from the edge of the drop tube.

d) Verify the drop tube O-ring is installed and properly secured. Insert the drop tube into the tank riser (See Fig. P2.1). Carefully continue lowering the drop tube into the tank, until the drop tube collar and O-ring rests on the edge of the product riser pipe.

e) Next, visually inspect the drop tube to see if it is installed correctly and check to ensure the highest point of the discharge opening of the drop tube is no more than 6 inches from the bottom of the tank.

NOTE: DO NOT REMOVE the drop tube unless it fails TP201.1C

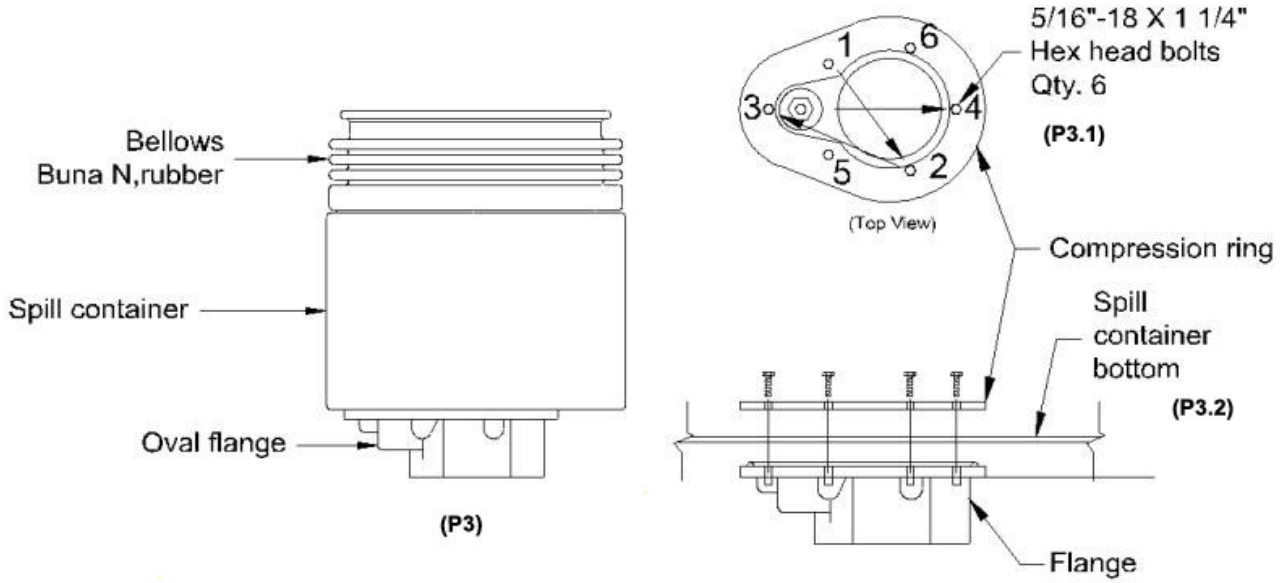

NOTE: The spill containment assembly is pre-assembled for ease of installation as shown above. (Components of CON2-31103 are listed in the Exhibit 1 checklist contained in this Manual.)

3) Install Preassembled Product Containment Assembly (CON2-31103)

a) Apply a Teflon®, Fire Marshall approved thread sealing compound on the upper male threads of the 4 inch riser pipe.
b) Manually tighten the complete product containment assembly (CON2-31103) (Fig. P3) onto the 4 inch riser pipe.
c) Use either the CNI Mfg. Containment Installation/Removal Tool (p/n EVRSYS116), or a chain wrench with offset, and torque the oval flange onto the 4 inch product riser pipe to the value specified in Table 1.

(NOTE: If the spill container must be removed from the oval flange in order to properly torque the flange onto the 4 inch tank riser proceed to following steps i, ii, and iii.)

i) Inside the spill container there are six (6) hex head bolts and a compression ring that must be removed (See Fig. P3.1). Once removed, lift the spill container to expose the oval flange.
ii) If using the CNI Mfg. Containment Installation/Removal Tool (p/n EVRSYS116) torque the containment assembly and oval flange onto the 4 inch riser to the value specified in Table 2. If a chain wrench with an offset is used, torque the oval flange onto the 4 inch tank riser to the value specified in Table 2.
iii) Line up the spill containment assembly on the oval flange, and then align the compression ring with the holes in the oval flange (See Fig. P3.2) and manually tighten the six hex head bolts. Torque a little at a time in a cross over pattern for a correct seal, until you achieve 15 foot-pounds for each bolt each time (See Fig. P3.1).

4) Install Jam Nut

NOTE: CNI Mfg. tool part number EVRSYS112 must be ordered separately.
The jam nut is only used on the product side. For ease of installation, the jam nut is included in the pre-assembled Fil-Spill container CON2-31103. It's located on the second set of threads, on the bottom half of the flange (See Fig. P7).

a) Ensure jam nut has anti-seize applied to threads, then screw in the jam nut by hand until it rests against the drop tube.

b) Using the Jam Nut Installation/Removal tool part number EVRSYS112 (see example in Fig. P7), tighten the jam nut to value specified in Table 2. The jam nut must be in contact with the drop tube flange.

Figure P7

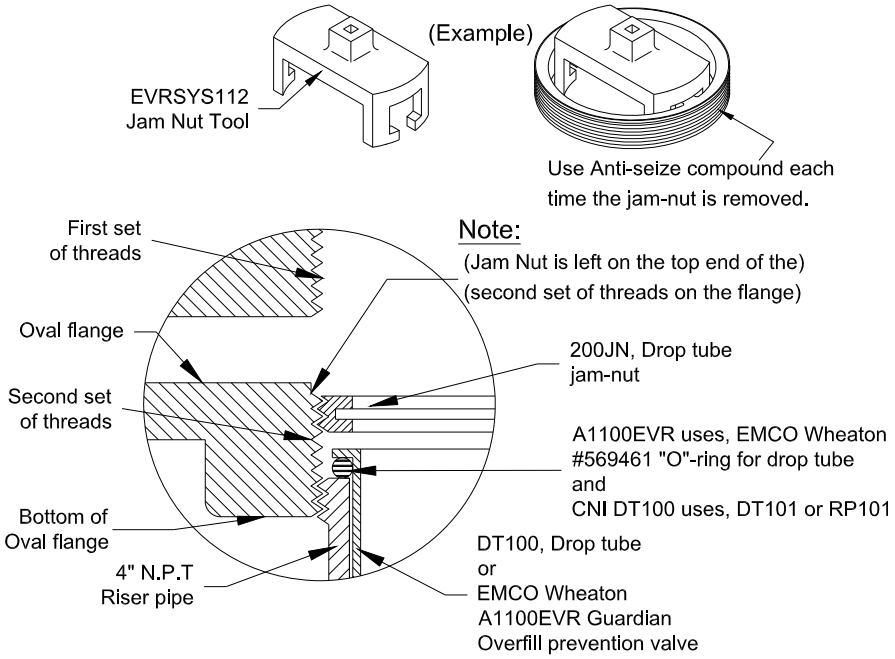

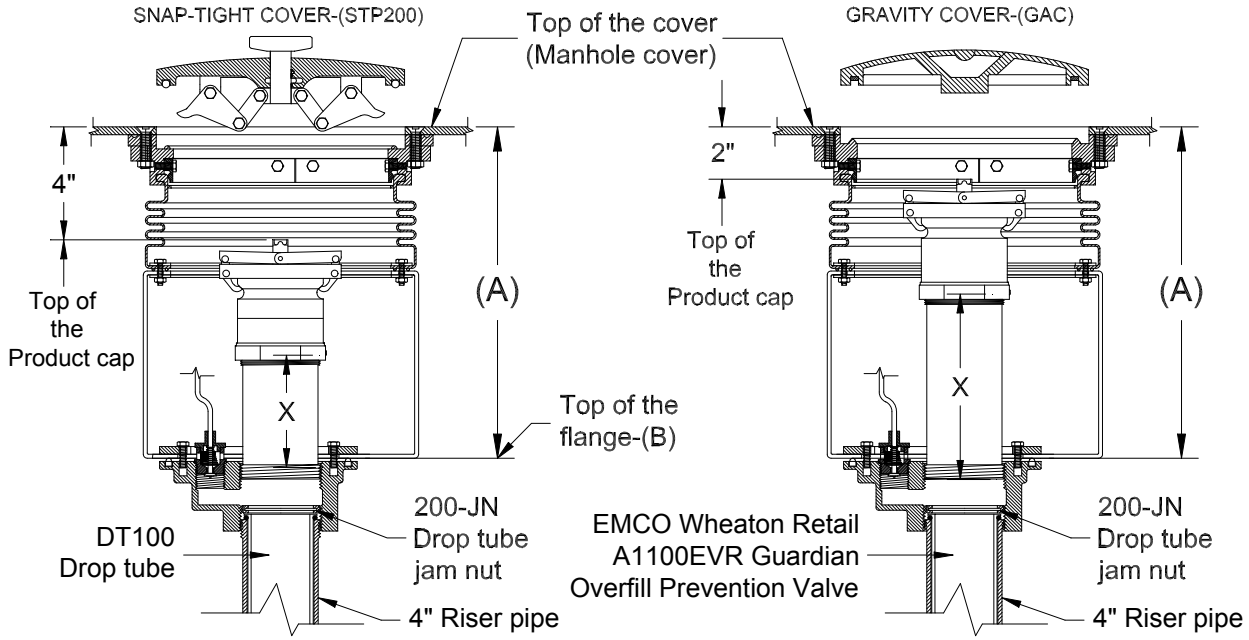

Figure P5

5) Determine the Length of the 4 inch N.P.T Containment Nipple

Refer to Fig. P5 and follow Equation 2 given on this page:

a) Measure the distance from the top of the manhole cover to the top of the oval flange (dimension A).
b) From that deduct 4 inches for the depth of the Snap-Tight Cover, or 2 inches for the depth of the Gravity Cover (dimension Y).
c) From that total, you would then deduct 6 9/16 inches for the A0030-124; or 6 inches for the A0030-124S product rotatable Adapter and cap (dimension Z).
d) Finally, add 1 ¼ inches for the threads.
e) The final number is the required length of the containment nipple (dimension X).

$$\text{Equation 2: } X = ((A - Y) - \mathrm{Z}) + 1\tfrac{1}{4}$$

X = containment nipple length, inches

A = distance from the top of oval flange to the top of manhole cover, inches

Y = 4 inches if using STC; 2 inches if using gravity cover

Z = combined length of product rotatable adaptor and dust cap, inches

$1\tfrac{1}{4}$ = thread length, inches

6) Cut the 4 inch N.P.T Containment Nipple to Length and Install

DO NOT USE HACKSAW TO CUT CONTAINMENT NIPPLE.

a) Once the proper nipple length is established, use a roller style, 2-blade pipe cutter to ensure a flat square cut across the top of the nipple, verifying squareness with a T-square or bevel.
b) Cut the tapered threads on both ends of the nipple.
c) Ensure that a square, flush, smooth, sealing surface is achieved across the top of the nipple. De-burr and clean nipple threads.
d) Apply a Teflon®, Fire Marshall approved thread sealing compound on the lower nipple threads that will interface with the oval flange.
e) Manually tighten the containment nipple into oval flange, then torque to value specified in Table 2.

7) Install Rotatable Product Adapter

a) Install rotatable product Adapter according to the manufacturer installation instructions that are included in this manual.

Note: CNI Mfg. tool part number EVRSYS106 must be used to get the correct torque when installing the Emco Wheaton Retail Rotatable Adapter onto the containment nipple. **This tool is ordered separately.**

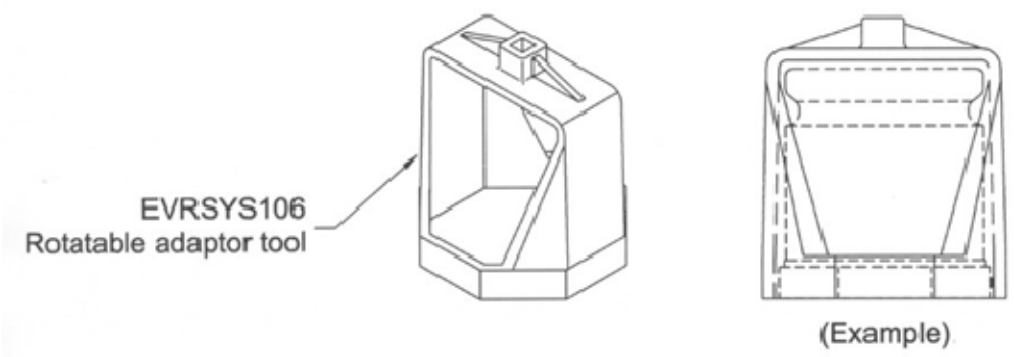

8) Install The Floor Plate Cover And Insert Bellows Bead Into Cover Ring

a) Use two people to pick up the floor plate cover and align holes with containment area holes.

b) Holding the bellows, reach into the containment area and work the bellows bead (A) into the groove (B) of the cover ring. (Refer to Fig P8.)

c) Line up the 3 Piece Bellows Hold Down Clamp (C).

d) Screw on the six (6) ¼ inch-10 x ¾ inch bolts (See Fig. P8) until hand tight. Using a 7/16ths inch socket and an appropriate torque wrench, torque each of the six bolts to the value specified in Table 2.

e) Finish installation of floor plate per manufacturers' directions (not included in this document.)

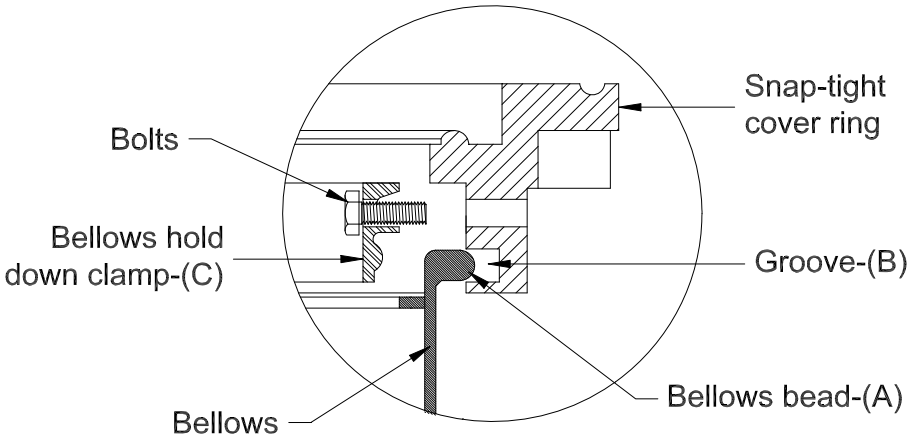

(Figure P8)

Pre-Assembly Notes for EVR Stand Alone/Direct Bury System, Vapor Side using Model Nos. 205V-31103 or 214V-31103

Prior to installation ensure that you have:

- a T-square or bevel square set to 90º to verify squareness of riser and containment nipple;
- a bubble level or equivalent;
- a standard chain wrench with offset;
- torque wrenches capable of measuring from 3 to 350 foot-pounds as appropriate;
- a torque wrench capable of measuring 10 to 20 inch-pounds;
- a 5/32nd inch Allen® wrench head adapter for torque wrench (used for set screws on 'S' series Adapters);
- a flathead torque adapter or appropriately sized torque driver (used for set screws on 'non-S' series Adapter;
- a standard 7/16ths inch socket;
- CNI Mfg. Rotatable Adapter Tool P/N EVRSYS106;
- Loc-Tite® threadlock model #222MS,
- Teflon®, Fire Marshall approved thread sealing compound;
- Roller style, 2-blade pipe cutter,
- Cutting tool (die) for tapered N.P.T. threads on 4 inch pipes (8 threads per inch).

- Depending on your area, make sure you allow for the frost rise when shooting your grade. There should be a 1 inch crown of concrete around the lid to prevent water entry upon opening the lid.
- Use ONLY the correct tools and torque wrenches for a correct installation.
- Use appropriate safety measures, to avoid fire and personal injury.
- Inspect the components for damage.

Note: Do not disassemble the containment assembly unless replacing a component of the assembly. It is shipped ready to install.

Table 3
205V-31103 and 214V-31103 Torque Values

Interface Description	Torque Specifications	Special Tool Needed
4 inch Tank Riser to Extractor	250-350 ft.-lbs.	No, Standard chain wrench with offset and torque wrench.
Bottom Section of containment to 4 inch Tank Riser	195-200 ft.-lbs.	No, Standard chain wrench with offset and torque wrench.
STP-12RING, 3 Piece Compression Ring to bottom section of Containment	3 ft.-lbs.	No, Standard 7/16ths inch socket and torque wrench.
4 inch Containment Nipple to bottom section of Containment	170-175 ft.-lbs.	No, Standard chain wrench with offset and torque wrench.

Continued on next page.

Table 3
205V-31103 and 214V-31103 Torque Values (continued)

Interface Description	Torque Specifications	Special Tool Needed
A0076-124 and/or A0076-124S EMCO Wheaton Rotatable Vapor Adapter to 4 inches Containment Nipple	35 ft.-lbs.	Yes, CNI Mfg. Rotatable Adapter Tool p/n EVRSYS106.
Two set screws for the A0076-124S EMCO Wheaton Rotatable Vapor Adapter; or three screws for the A0076-124 EMCO Wheaton Rotatable Vapor Adapter.	20 in.-lbs.	Yes, 5/32nd inch Allen® wrench head Adapter for torque wrench if using the 'S' series adapter. A flathead Adapter for torque wrench or an appropriately sized torque driver when using the 'non-S' series Adapter.

Figure A-4
Typical Vapor Side Installation for a Stand Alone/Direct Bury Using CNI Mfg. 205V-31103 (with Snap-Tight Cover)

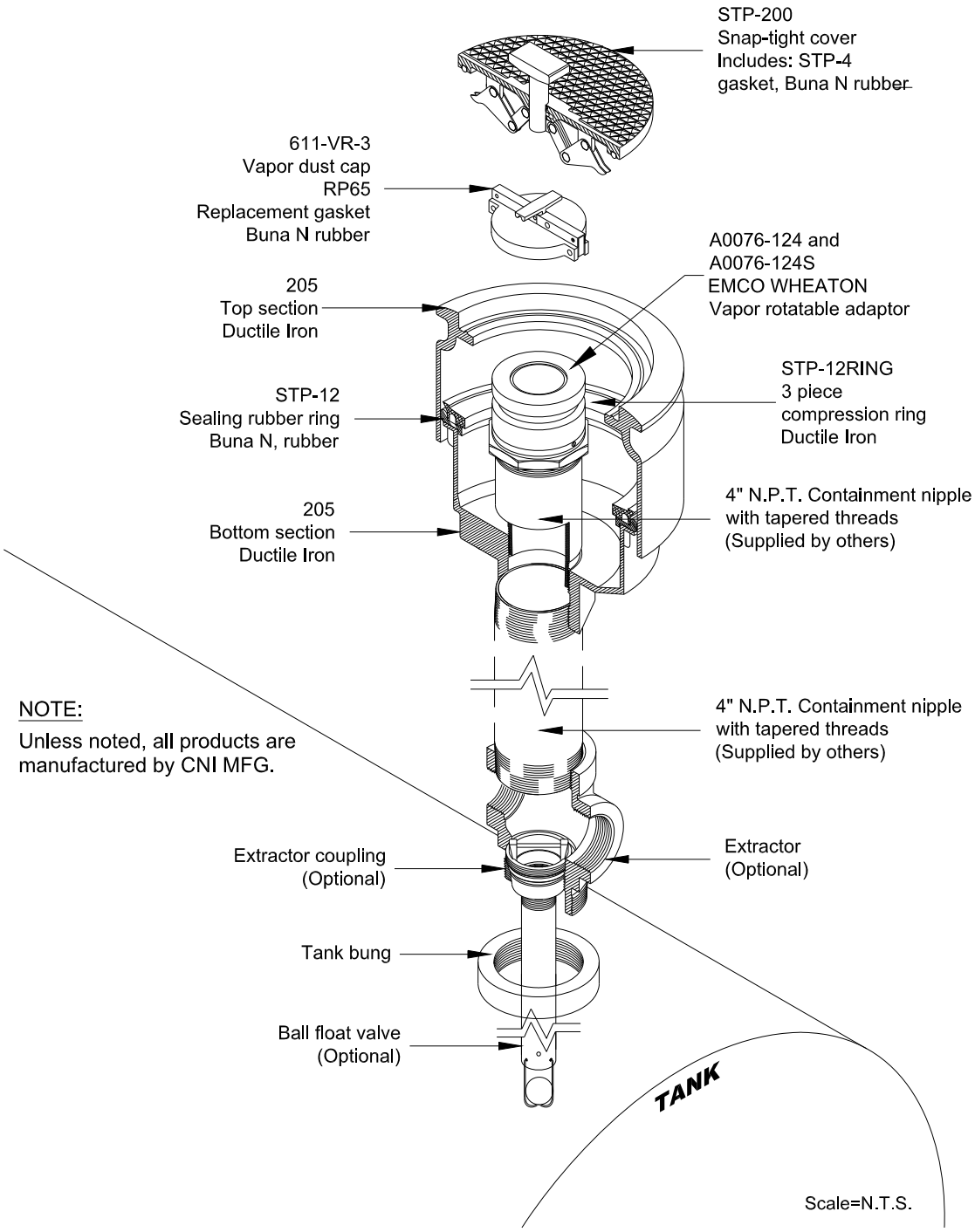

Figure A-5
Typical Vapor Side Installation for a Stand Alone/Direct Bury Using 214V-31103 Containment (with Gravity Cover)

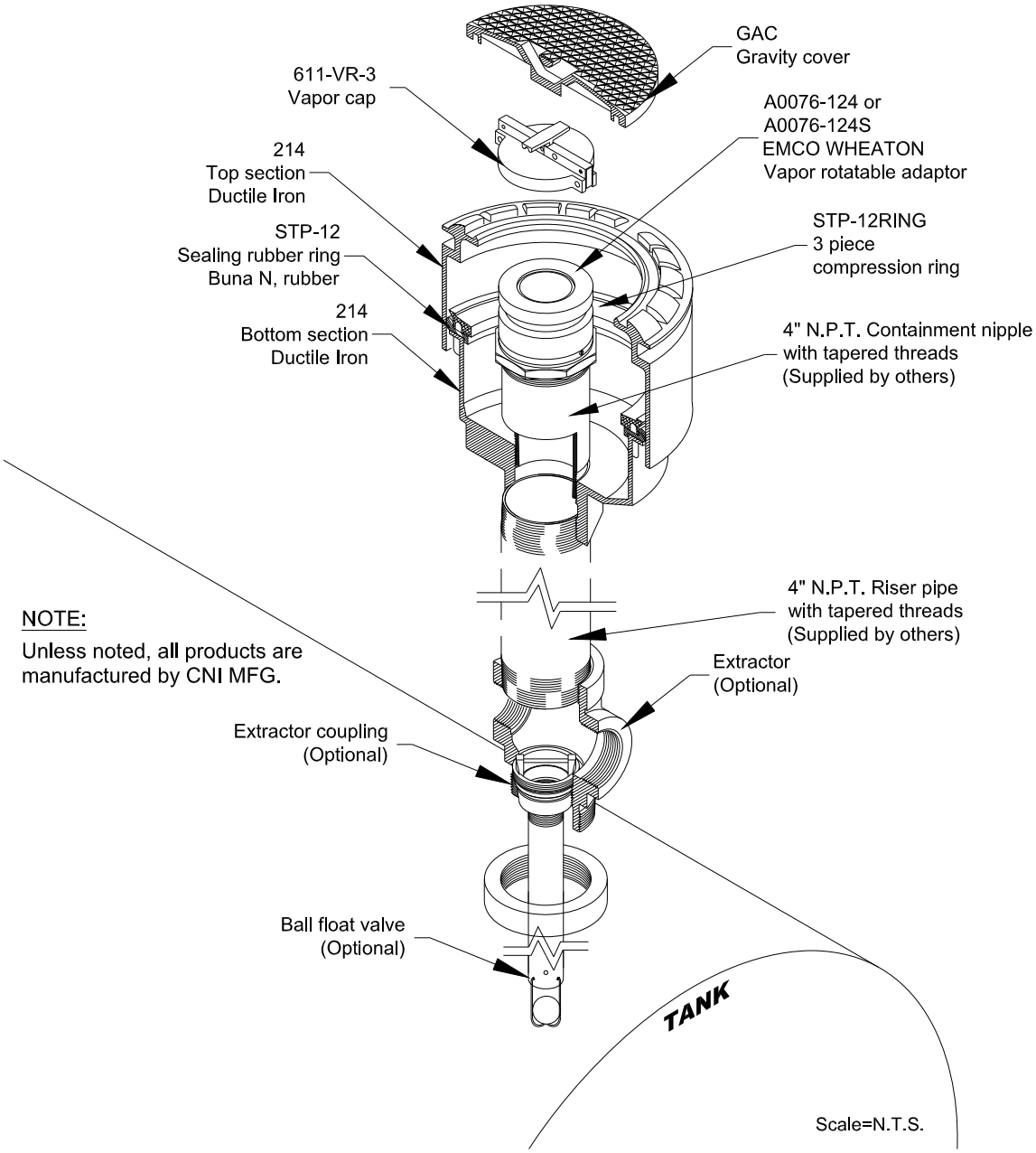

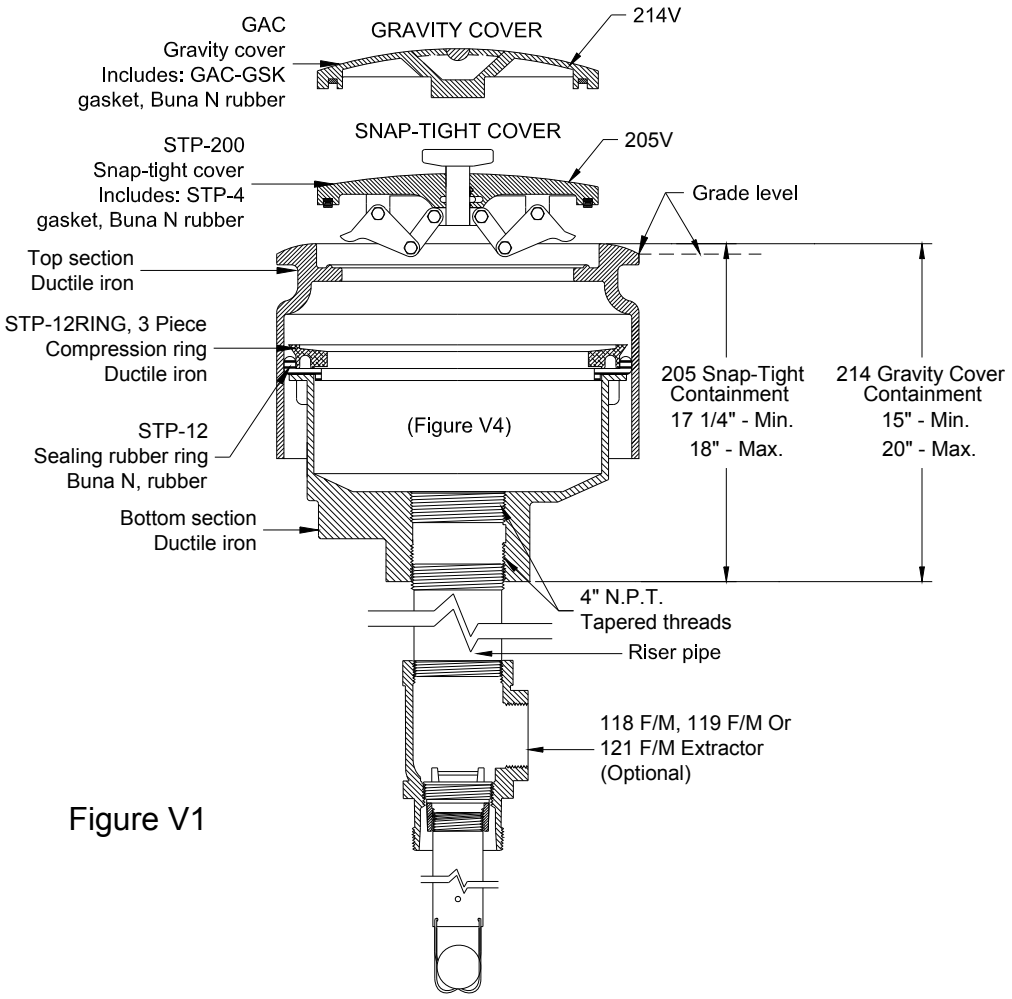

Figure V1

1) Cut the Vapor Riser to Length and Install

DO NOT USE HACKSAW TO CUT RISER PIPE.

a) The length of the 4 inch riser pipe will vary depending upon the height dimension of the 2 piece ductile iron containment and the depth of the underground storage tank. Regardless of these variables, keep in mind that the 205V and 214V have an adjustable height. (See Figure V1 above for the minimum and maximum dimensions.)

b) To determine the length of the vapor riser pipe, measure the distance from the grade level to the top of the extractor, tank bung, or T-fitting (see Fig. V1).

c) Deduct between 17 1/4 inches and 18 inches for the 205V Snap-Tight Containment.
Deduct between 15 inches and 20 inches for the 214V Gravity Cover Containment.

Continued on next page.

Cut the Vapor Riser to Length and Install (continued)

d) Once the proper riser length is established, use a roller style, 2-blade pipe cutter to ensure a flat square cut across the top of the riser, verifying squareness with a T-square or bevel.

e) Cut the tapered N.P.T. threads on both ends of the 4 inch riser for a minimum length of 1 1/8 inches on each end.

f) Ensure that a square, flush, smooth, sealing surface is achieved across the top of the riser. De-burr and clean riser threads.

g) Apply a Teflon®, Fire Marshall approved thread sealing compound on the lower male threads of the riser pipe. Manually tighten the riser pipe into tank bung, T-fitting, or extractor, then torque to value specified in Table 3.

(A) Top Section
(B) #STP-12RING 3 Piece, Compression Ring
(C) #205-6 S.S. 1/4"-20 X 1 1/2" bolts
(D) STP-12 Buna N, Sealing Rubber Ring
(E) Height Adjustment
(F) Bottom Section

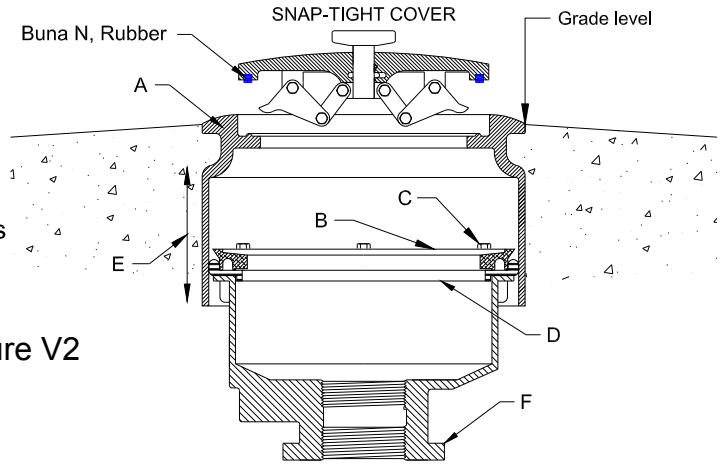

Figure V2

2) Installing the Stand –Alone/Direct Bury Containment

THE 205V AND 214V CAN BE INSTALLED AS IT COMES OUT OF THE BOX, BUT IF NEEDED, CNI MFG. RECOMMENDS THE FOLLOWING FOR EASIER INSTALLATION (refer to Figure V2):

a) To adjust for grade – loosen the six ¼ - 20 x 1 ½" bolts (C) with the 7/16-inch socket, DO NOT REMOVE COMPLETELY.

b) Turn the unit upside down, use a 2X4 piece of wood and lay it over the bottom of the unit and hit the wood with a single jack hammer for the desired height adjustment (See Figure V2).

c) Take the containment and mount it onto the 4 inch tank riser and tighten. Torque to value specified in Table 3.

d) Depending on your area, make sure you allow for the frost rise when shooting your grade. There should be a 1 inch crown of concrete around the lid to prevent water entry upon opening the lid. Lay a level across the top of the containment and ensure it is level.

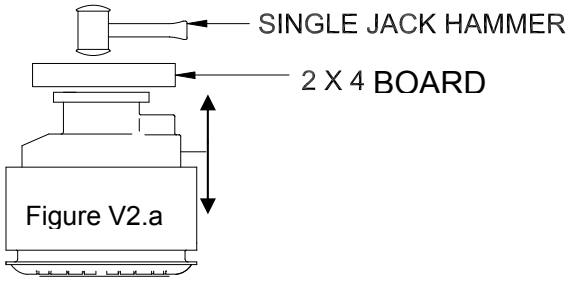

Figure V2.a

e) At this point, adjust the top section (A) of the containment to get the grade level needed. Take care when tightening the six ¼" – 20 x 1 ½" bolts (C). Do no apply more than 3 foot-pounds of torque to the bolts. For a correct seal, torque a little at a time in a cross over pattern (as if drawing a star) until you achieve 3 foot-pounds for each bolt each time,

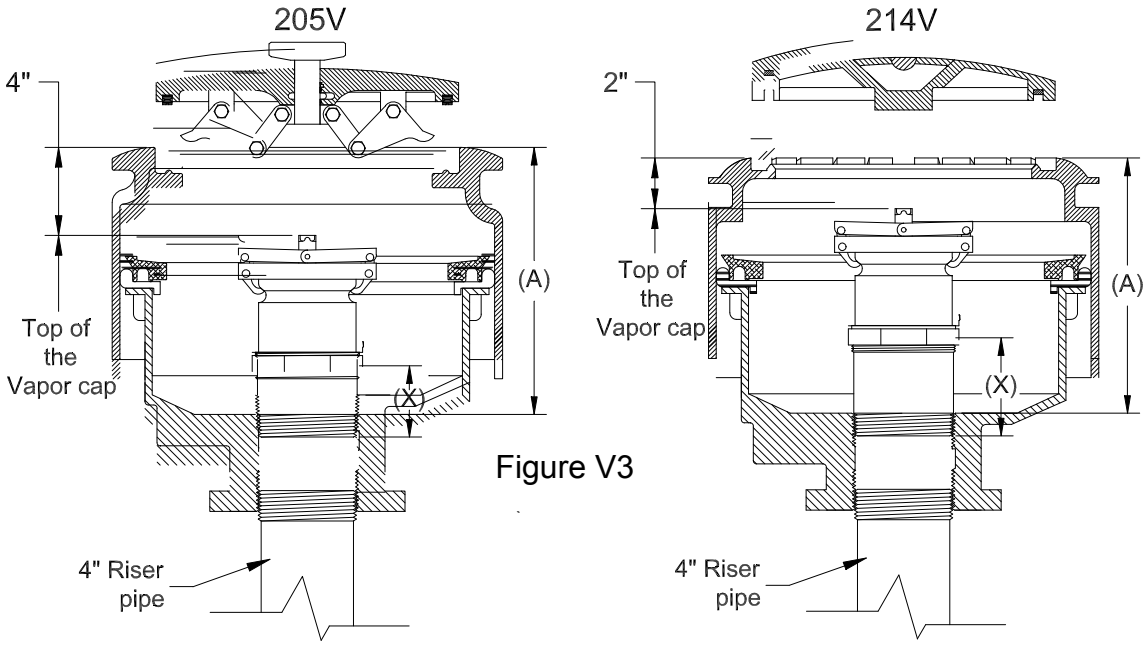

Figure V3

3) Determine the Length of the 4 inch N.P.T Containment Nipple

Refer to Fig. V3 and follow Equation 3 given on this page:

a) Measure the distance from the top of the containment to the lowest point of the internal bottom of the containment (dimension A).

b) From that deduct 4 inches for the depth of the Snap-Tight Cover, or 2 inches for the depth of the Gravity Cover (dimension Y).

c) From that total, you would then deduct 6 5/16 inches for the A00-124; or 6 1/2 inches for the A00-124S vapor rotatable Adapter and cap (dimension Z).

d) Finally, add 1 ¼ inches for the threads.

e) The final number is the required length of the containment nipple (dimension X).

$$\text{Equation 3: } X = ((A - Y) - \text{Z}) + 1\tfrac{1}{4}$$

X = containment nipple length, inches

A = distance from the top of oval flange to the top of manhole cover, inches

$Y = 4$ if using Snap-Tight Cover; 2 if using Gravity Cover, inches

Z = combined length of vapor rotatable adaptor and dust cap, inches

$1\tfrac{1}{4}$ = thread length, inches

4) Cut the 4 inch N.P.T Containment Nipple to Length and Install

DO NOT USE HACKSAW TO CUT CONTAINMENT NIPPLE.

a) Once the proper nipple length is established, use a roller style, 2-blade pipe cutter to ensure a flat square cut across the top of the nipple. Verify squareness with T-square or bevel square.

b) Cut the tapered N.P.T threads on both ends of the 4 inch riser for a minimum length of 1 1/8 inches on each end.

c) Ensure that a square, flush, smooth, sealing surface is achieved across the top of the nipple. De-burr and clean nipple threads.

d) Apply Teflon®, Fire Marshall approved thread sealing compound on the lower nipple threads.

e) Inserting it through the top of the containment, manually tighten the containment nipple into the bottom section of the containment, then torque to the value specified in Table 3.

5) Install Rotatable Vapor Adapter

a) Install rotatable vapor Adapter according to the manufacturer installation instructions that are included in this manual.

Note: CNI Mfg. tool part number EVRSYS106 must be used to achieve the correct torque when installing the Emco Wheaton Retail Rotatable Adapter onto the containment nipple. This tool is ordered separately.

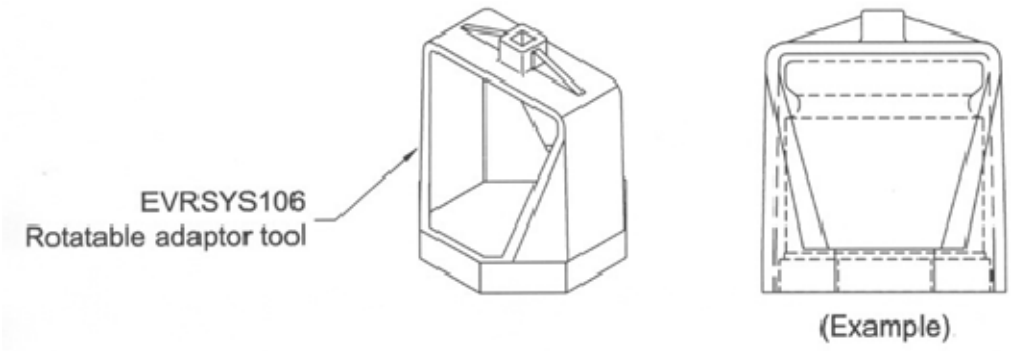

Pre-assembly Notes for EVR Stand Alone/Direct Bury System, Product Side using Model Nos. 205P-31103 or 214P-31103

Prior to installation ensure that you have:

- a T-square or bevel square set to 90º to verify squareness of riser and containment nipple;
- a bubble level or equivalent;
- Standard chain wrench with offset;
- torque wrenches capable of measuring from 3 to 350 foot-pounds;
- a torque wrench capable of measuring 10 to 20 inch- pounds;
- a standard 7/16ths inch socket;
- CNI Mfg. Jam Nut Installation Tool Part Number P/N EVRSYS112;
- CNI Mfg. Rotatable Adapter Tool P/N EVRSYS106;
- a 5/32nd inch Allen® wrench head torque Adapter (used for set screws on 'S' series Adapter);
- a flathead torque adapter or appropriately sized torque driver (used for set screws on 'non-S' series Adapter;
- Loc-Tite® model #222MS;
- Teflon®, Fire Marshall approved thread sealing compound;
- Roller style, 2-blade pipe cutter;
- Die capable of cutting 8 threads per inch, tapered N.P.T. into 4 inch outside diameter pipe
- Depending on your area, make sure you allow for the frost rise when shooting your grade. There should be a 1 inch crown of concrete around the lid to prevent water entry upon opening the lid.
- Use ONLY the correct tools and torque wrenches for a correct installation.
- Use appropriate safety measures, to avoid fire and personal injury.
- Inspect the components for damage.
- Do not disassemble the containment assembly unless replacing a component of assembly. It is shipped ready to install.

NOTE: In the preassembled 205P and 214P containments, the Jam Nut is already located in the containment for ease of installation.

Table 4
205P-31103 and 214P-31103 Torque Values

Interface Description	Torque Specifications	Special Tool Needed
4 inch Tank Riser to Tank bung, T-fitting, or Extractor	250-350 ft.-lbs.	No, Standard chain wrench with offset and torque wrench.
Bottom section of containment to 4 inch Tank Riser	195-200 ft.-lbs.	No, Standard chain wrench with offset and torque wrench.
RP12-Push. Drain Valve Assembly to Spill Containment	Bottom out, then an additional 360º turn.	No.

Continued on next page.

Table 4 (continued)
205P-31103 and 214P-31103 Torque Values

Interface Description	Torque Specifications	Special Tool Needed
STP-12RING, 3 Piece Compression Ring to bottom section of Containment	3 ft.-lbs.	No, Standard 7/16ths inch socket and torque wrench.
4 inch Containment Nipple to bottom section of Containment	170-175 ft.-lbs.	No, Standard chain wrench with offset and torque wrench.
A0076-124 and A0076-124S EMCO Wheaton Rotatable Product Adapter to 4 inches Containment Nipple	35 ft.-lbs.	Yes, CNI Mfg. Rotatable Adapter Tool p/n EVRSYS106.
Two set screws for the A0076-124S EMCO Wheaton Rotatable Vapor Adapter; or three screws for the A0076-124 EMCO Wheaton Rotatable Vapor Adapter.	20 in.-lbs.	Yes, 5/32nd inch Allen® wrench head Adapter for torque wrench if using the 'S' series adapter. A flathead Adapter for torque wrench or an appropriately sized torque driver when using the 'non-S' series Adapter.

Figure A-6
Typical Product Side Installation for a Stand Alone/Direct Bury
Using CNI Mfg. 214P-31103 Containment (with Gravity Cover)

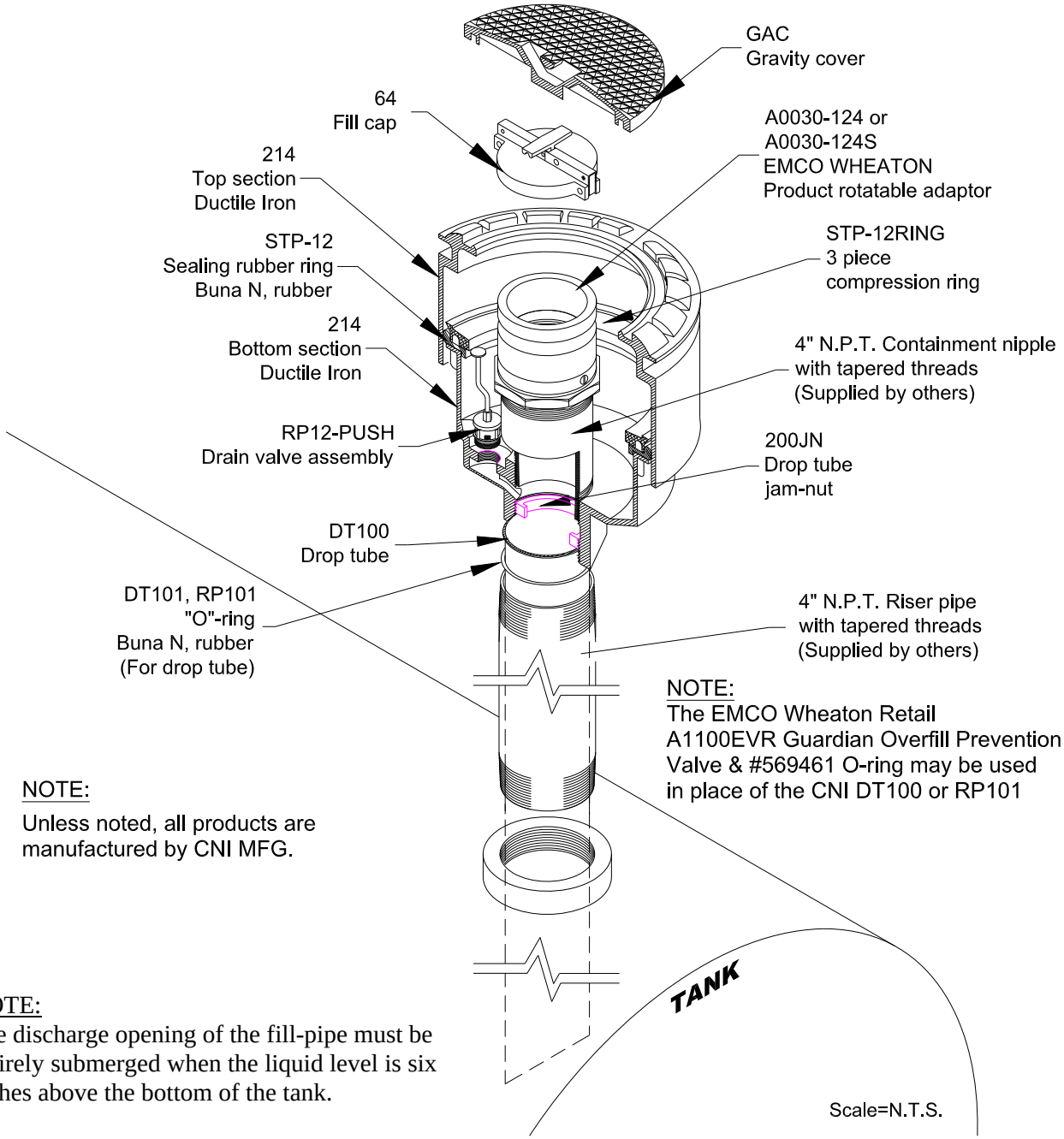

NOTE:
The EMCO Wheaton Retail A1100EVR Guardian Overfill Prevention Valve & #569461 O-ring may be used in place of the CNI DT100 or RP101

NOTE:
Unless noted, all products are manufactured by CNI MFG.

NOTE:
The discharge opening of the fill-pipe must be entirely submerged when the liquid level is six inches above the bottom of the tank.

Figure A-7
Typical Product Side Installation for a Stand Alone/Direct Bury
Using CNI Mfg. 205P-31103 (with Snap-Tight Cover)

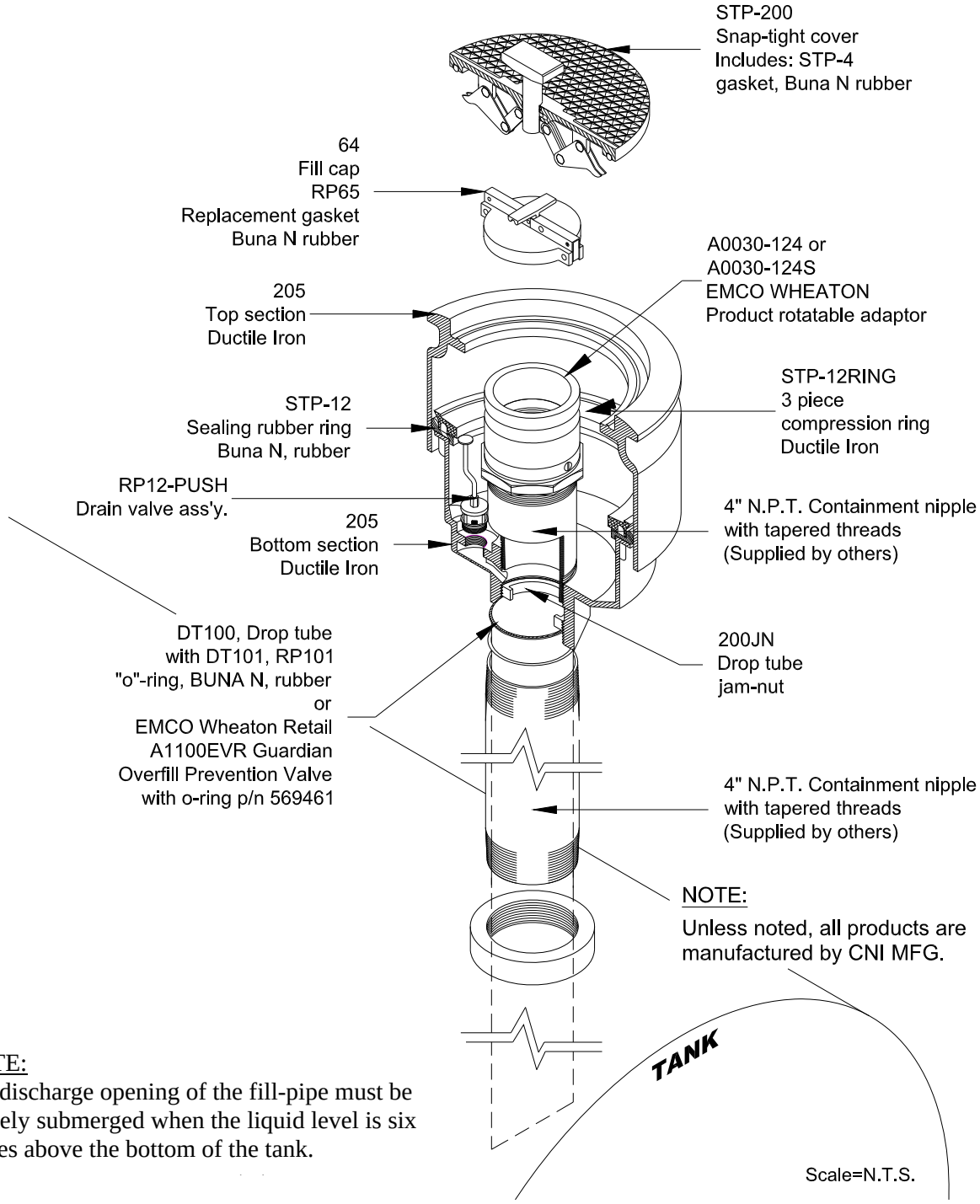

NOTE:
The discharge opening of the fill-pipe must be entirely submerged when the liquid level is six inches above the bottom of the tank.

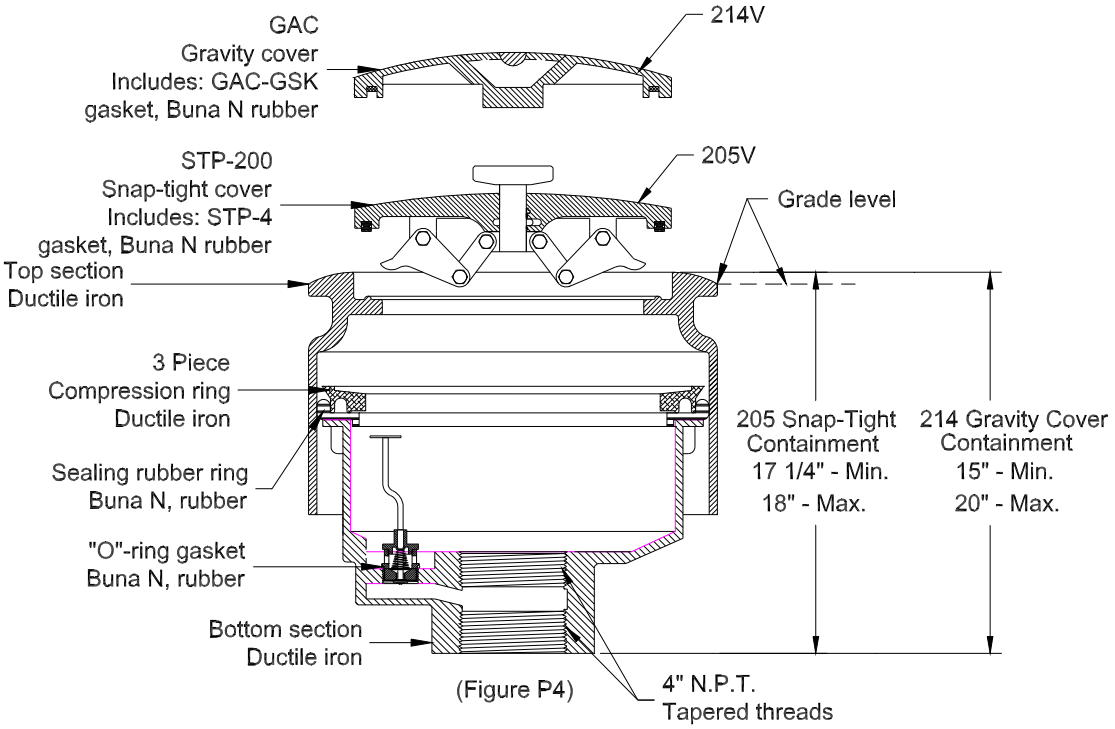

(Figure P4)

1) Cut the 4 inch Product Riser to Length and Install

DO NOT USE HACKSAW TO CUT RISER PIPE.

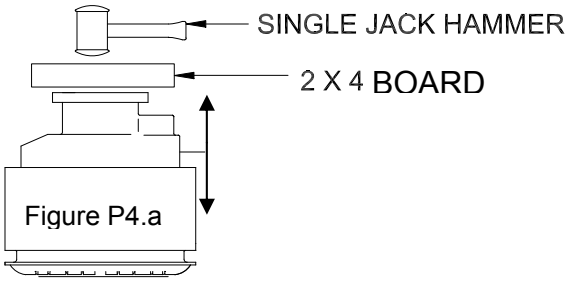

Figure P4.a

a) The length of the 4 inch riser pipe will vary depending upon the height dimension of the 2 piece ductile iron containment and the depth of the underground storage tank. Regardless of these variables, keep in mind that the 205P and 214P have an adjustable height. See Figure P4 for the minimum and maximum dimensions.

b) To determine the length of the product riser pipe, measure the distance from the grade level to the top of the inside of the tank (see Fig. P4.a).

c) Deduct between 17 1/4 inches and 18 inches for the 205P Snap-Tight Containment. Deduct between 15 inches and 20 inches for the 214P Gravity Cover Containment.

d) Once the proper riser length is established, use a roller style, 2-blade pipe cutter to ensure a flat square cut across the top of the riser. Verify this using a T-square or bevel square.

e) Cut tapered N.P.T. threads on both ends of the 4 inch riser for a minimum length of 1 1/8 inches on each end. Ensure that a square, flush, smooth, sealing surface is achieved across the top of the riser. De-burr and clean riser threads.

f) Apply Teflon®, Fire Marshall approved thread sealing compound on the lower male threads of the riser pipe. Manually tighten the riser pipe into tank bung, then torque to the value specified in Table 4.

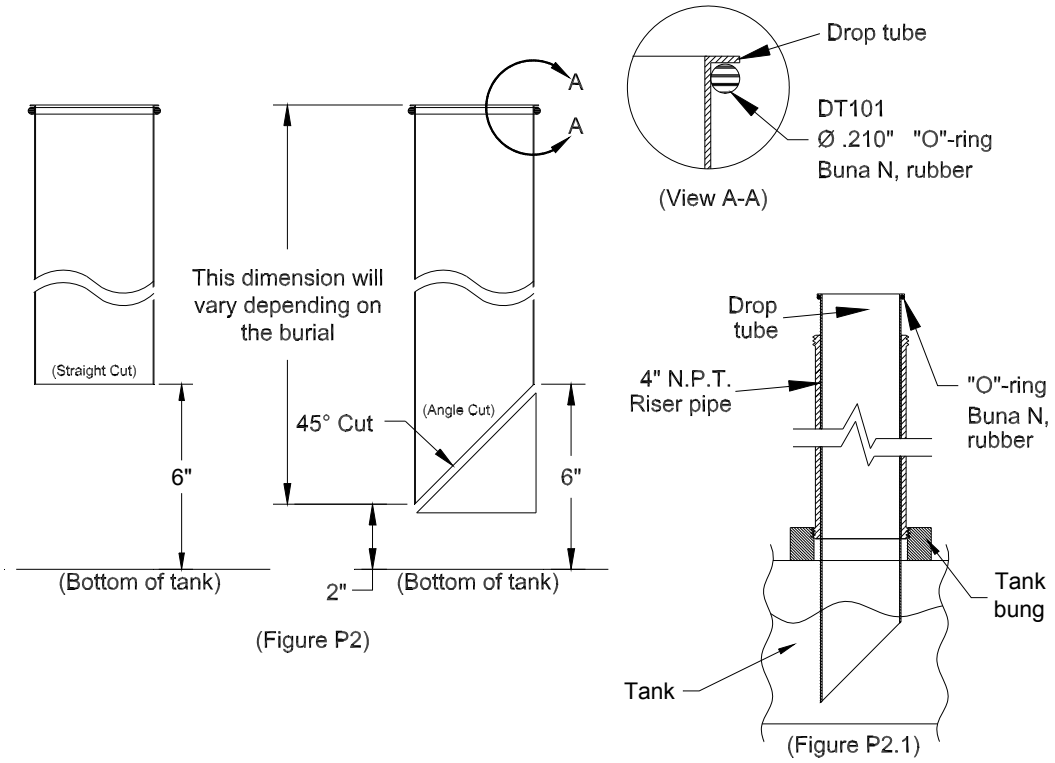

2) **<u>Install the Drop Tube following appropriate drop tube installation instructions</u>**.

NOTE: DO NOT REMOVE the drop tube unless it fails TP201.1C

For the DT100 Installation: *(NOTE: Installation instructions for the EMCO Wheaton A1100EVR Guardian are found elsewhere in this manual)***:**

a) Measure the distance between the top of the product riser pipe and the bottom of the tank.

b) Cut the solid drop tube at a 45º angle, 6 inches from the extreme top cut, to the bottom of the tank. For a straight cut, the dimension should also be 6 inches from the bottom of the drop tube to the bottom of the tank – (See Fig. P2). Cut the drop tube to the referenced dimension using a hacksaw equipped with a fine tooth blade.

   NOTE: For an angle cut, the drop tube may not exceed 2 inches from the bottom of the tank.

c) Carefully remove all cutting burrs from the edge of the drop tube.

d) Verify the drop tube O-ring is installed and properly secured on the drop tube. Insert the drop tube into the tank riser pipe (See Fig. P2.1). Carefully lower the drop tube into the tank, until the drop tube collar rests on the edge of the product riser pipe.

e) Next, visually inspect the drop tube to see if it is installed correctly and check to ensure the highest point of the discharge opening of the drop tube is no more than 6 inches from the bottom of the tank.

(A) Top Section
(B) #STP-12RING 3 Piece, Compression Ring
(C) #205-6 S.S. 1/4"-20 X 1 1/2" bolts
(D) STP-12 Buna N, Sealing Rubber Ring
(E) Height Adjustment
(F) Bottom Section

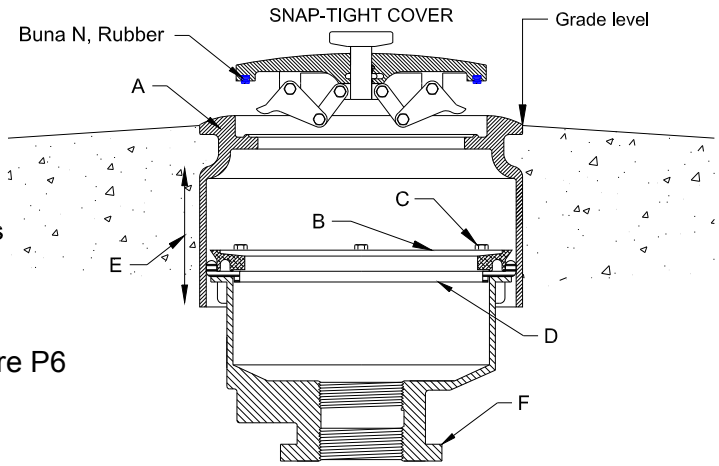

Figure P6

3) Installing the Stand Alone/Direct Bury Containment

THE 205P AND 214P CAN BE INSTALLED AS IT COMES OUT OF THE BOX, BUT IF NEEDED, CNI MFG. RECOMMENDS THE FOLLOWING FOR EASIER INSTALLATION, AS FOLLOWS:

a) To adjust for grade – loosen the six ¼ - 20 screws bolts (C) with the 7/16 inch socket, DO NOT REMOVE COMPLETELY.

b) Turn the unit upside down, use a 2X4 piece of wood and lay it over the bottom of the unit, hit the wood with a single jack hammer for the desired height adjustment. (See Figure P6.a).

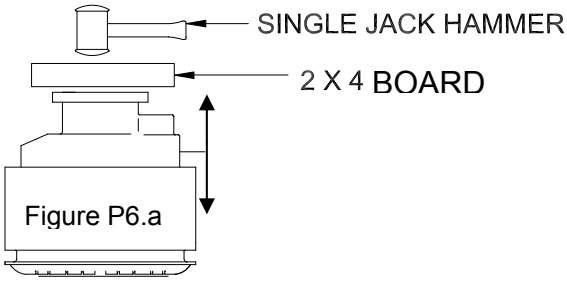

Figure P6.a

c) Take the containment and mount it onto the 4 inch tank riser and tighten. Torque to value specified in Table 4.

d) Depending on your area, make sure you allow for the frost rise when shooting your grade. There should be a 1 inch crown of concrete around the lid to prevent water entry upon opening the lid. Lay a level across the top of the containment and ensure it is level.

e) At this point adjust the top section (A) of the containment to get the grade level needed. Take care when tightening the six ¼" – 20 x 1 ½" bolts (C). Do no apply more than 3 foot-pounds of torque to the bolts. For a correct seal, torque a little at a time in a cross over pattern (as if drawing a star) until you achieve 3 foot-pounds for each bolt each time,

Figure P9

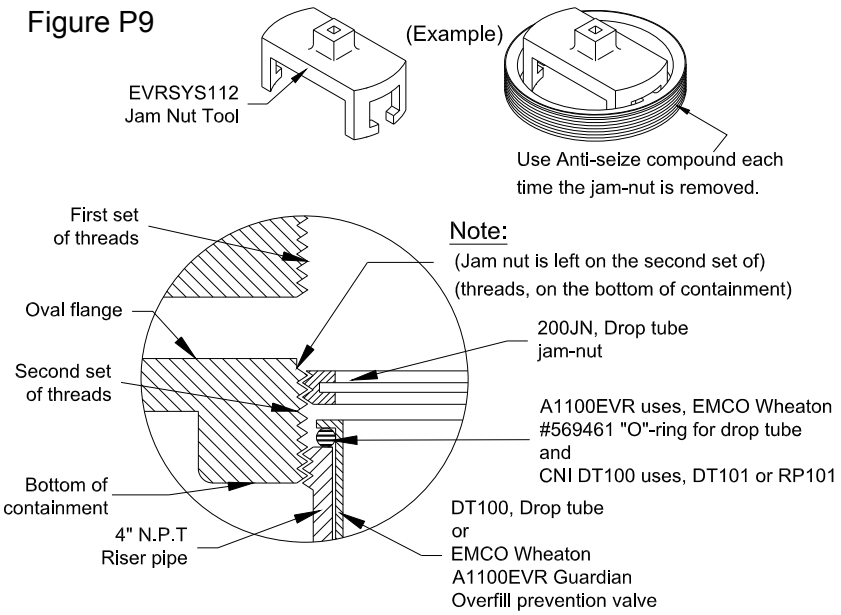

NOTE: CNI Mfg. tool part number EVRSYS112 (Jam Nut Installation/Removal Tool) must be ordered separately. The Jam nut is only used on the product side. For ease of installation, the jam nut is included in the 205P and 214P Containment. It's located on the second set of threads, on the bottom half of the Containment (See Fig. P9).

4) <u>Install Jam Nut</u>

a) Screw in jam nut, by hand, until it rests against the drop tube.

b) Using the Jam Nut Installation/Removal tool part number EVRSYS112 (see example in Fig. P9), tighten jam nut to value specified in Table 4. The jam nut must be in contact with the drop tube flange.

Figure P5

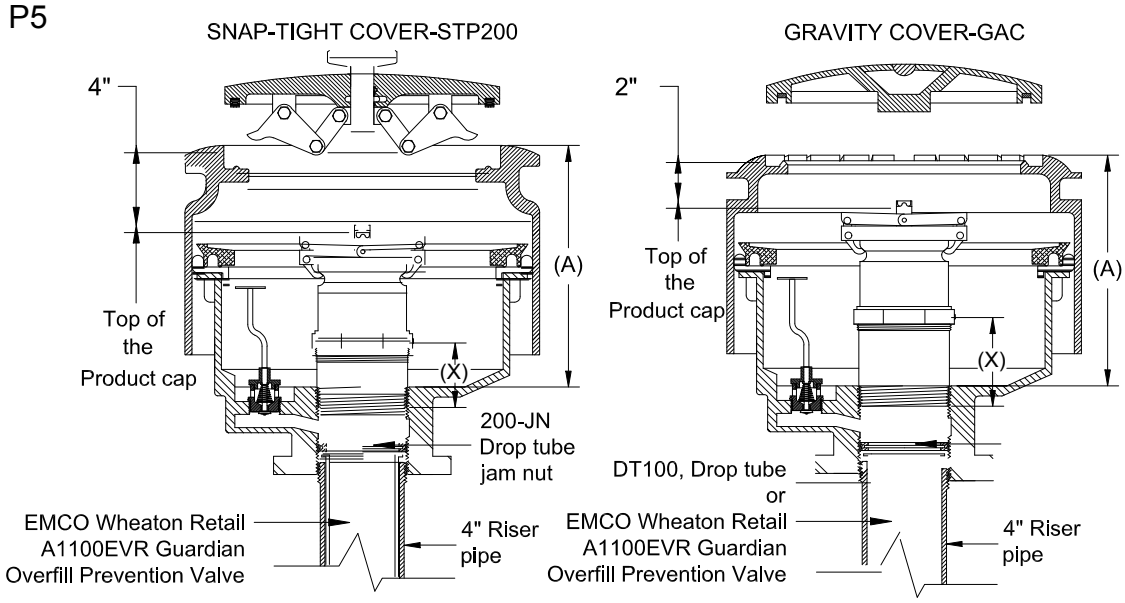

5) Determine the Length of the 4 inch N.P.T. Containment Nipple

Refer to Fig. P5 and follow Equation 4 given on this page:

a) Measure the distance from the top of the containment to the top of the flange (dimension A).
b) From that deduct 4 inches for the depth of the Snap-Tight Cover, or 2 inches for the depth of the Gravity Cover (dimension Y).
c) From that total you would then, deduct 6 9/16 inches for the A0030-124; or 6 inches for the A0030-124S product rotatable Adapter and cap (dimension Z).
d) Finally add 1 ¼ inches for the threads.
e) The final number is the required length of the containment nipple (dimension X).

$$\text{Equation 4: } X = ((A - Y) - Z) + 1\tfrac{1}{4}$$

X = containment nipple length, inches

A = distance from the top of oval flange to the top of manhole cover, inches

Y = 4 inches if using STC; 2 inches if using gravity cover

Z = combined length of product rotatable adaptor and dust cap, inches

$1\tfrac{1}{4}$ = thread length, inches

6) Cut the 4 inch N.P.T Containment Nipple to Length and Install

DO NOT USE HACKSAW TO CUT CONTAINMENT NIPPLE.

a) Once the proper nipple length is established, use a roller style, 2-blade pipe cutter to ensure a flat square cut across the top of the nipple. Verify squareness with the T-square or bevel square.

b) Cut the tapered N.P.T. threads on both ends of the 4 inch riser for a minimum length of 1 1/8 inches on each end.

c) Ensure that a square, flush, smooth, sealing surface is achieved across the top of the nipple. De-burr and clean nipple threads.

d) Apply Teflon®, Fire Marshall approved thread sealing compound on the lower nipple threads.

e) Inserting it through the top of the containment, manually tighten the containment nipple into the bottom section of the containment, then torque to the value specified in Table 4.

7) Install Rotatable Product Adapter

a) Install the rotatable product Adapter according to the manufacturer installation instructions that are included in this manual.

Note: CNI Mfg. Rotatable Adapter Tool, part number EVRSYS106, must be used to get the correct torque when installing the Emco Wheaton Retail Rotatable Adapter onto the containment nipple. This tool is ordered separately.

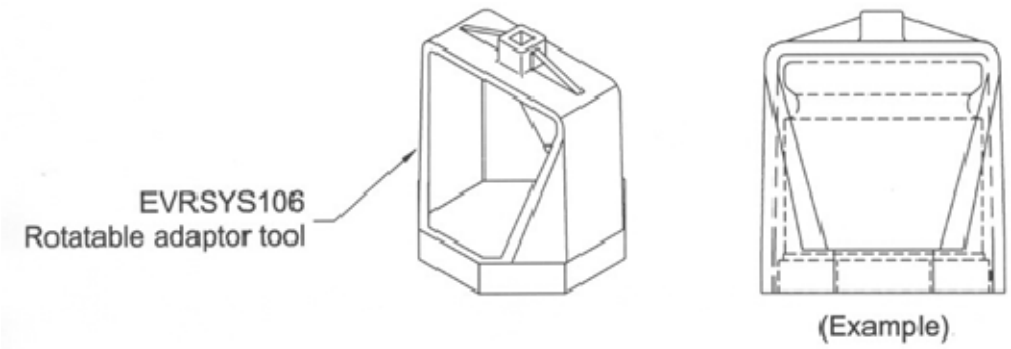

Figure A-8
CNI Mfg. Automatic Tank Gauge Cap and Adapter

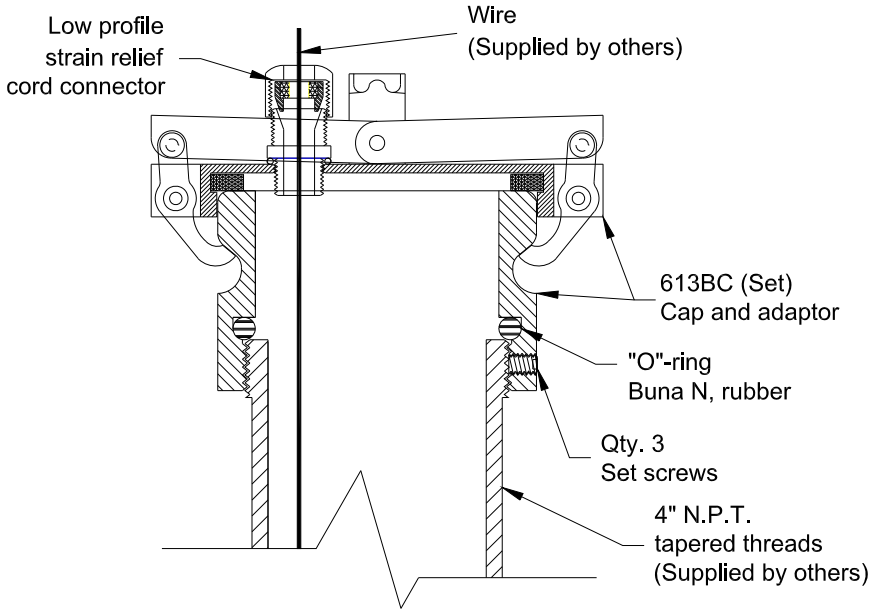

Materials
Cap: p/n 64 (Die cast, Aluminum)
Connector: p/n 613EF original, RP613EF replacement (Metal)
Locking dogs: Stainless Steel
Adapter: p/n 613B (Bronze casting)
O-ring for Adapter: p/n 613GSK original, RP613GSK replacement (Buna N, rubber)
Three (3) 5/32nd" set screws: (Stainless Steel)

Note: A 16 gauge wire is required for use with this cap; also CNI Mfg. 613B Adapter Installation/Removal Tool p/n EVRSYS128 must be ordered separately and used to install Adapter.

Installation Instructions for CNI Mfg. Tank Gauge Port Components

a) Install the Adapter onto a 4 inch N.P.T. tank riser. Manually tighten the Adapter then, torque it to 35 foot-pounds using CNI Mfg. 613B Adapter Installation/Removal Tool p/n EVRSYS128.

Note: Ensure the O-ring is present and properly installed in the lower portion of the Adapter.

b) Using a 5/32nd inch Allen® wrench, tighten each set screw a little at a time, until fully tightened.

c) Pass the 16 gauge wire through the strain relief cord connector and manually tighten the nut. Ensure the connector is adequately tightened in order to avoid any vapor leakage.

d) Lay the cap on the Adapter and snap the cap handle tight.

Maintenance
Annually inspect the gasket in the cap, if the gasket is worn or the cap spins freely on the Adapter, replace the gasket with a new gasket using P/N RP65.

Figure A-9
Installation Instructions for the EMCO Wheaton A1100EVR Guardian Installation

NOTE: DO NOT REMOVE the drop tube unless it fails TP201.1D

EMCO®
WHEATON RETAIL

A1100EVR GUARDIAN
OVERFILL PREVENTION VALVE
WITH THREADED BOTTOM

Permanent Identification Information:
Model #
Month/Year of Manufacture

Valve Sleeve

For use with the CNI Manufacturing Phase I EVR System

INSTALLATION INSTRUCTIONS

Caution

1. If the underground storage tank is equipped with a ball float vent valve, make sure it does not extend below the positive shut-off point of the A1100EVR Overfill Prevention Valve. If so, the ball float valve must be removed to allow proper operation of the A1100EVR Overfill Prevention Valve.
2. Never disconnect the drop elbow from the fill adapter when the A1100EVR Overfill Prevention Valve has reached the positive shut-off point of 95% total capacity. Note the tank truck hose is still full and must not be disconnected until enough fuel has been evacuated from the underground storage tank. This will allow the tank truck hose to drain, and be safe to disconnect from the fill adapter. Premature disconnection will result in a hazardous spill and/or a potential for personal injury and property damage.
3. Do not use electrical devices near gasoline vapors, as it could result in fire or explosion.

Warning

1. The A1100EVR Overfill Prevention Valve can only be installed after the spill containment has been installed without the Jam Nut p/n 200JN, containment nipple and swivel fill adapter in place.
2. Do not use a power saw, piping or tubing cutter as this may result in damage to the top drop tube, voiding warranty.
3. Once the A1100EVR Overfill Prevention Valve is completely assembled, **the Seal-All Sealant must cure for a minimum of 24 hours before installing into the underground storage tank.**
4. Only use non-hardening gasoline resistant pipe thread seal compound.

Tools Required

13/64" Drill Bit	Hacksaw (fine tooth)	Pipe Thread Seal Compound
Pop Rivet Gun	Hand File (fine)	150-Grit Size Emery Cloth
Power Drill	Marker	De-burring Tool w/ #10 Blade
Tape Measure	Hammer	Fabric Strap Wrench (2)
Emco Drill Fixture, p/n 566675	EVRSYS116 Containment Installation/Removal Tool	EVRSYS112 Jam Nut Installation/Removal Tool
Anti-Seize Compound		

Packing List

(1) Drop Tube O-ring #569461
(1) Collar #566679 with O-ring #480049
(1) Seal-All Sealant #566726
(4) Pop Rivets #564412
(1) Counter Sink Indenter #564416
(1) Bottom Aluminum Tube Assembly w/Bushing #568189 Attached
(1) A1100EVR Overfill Prevention Valve w/Top Tube & Screw Base Attached

Top Tube Installation Procedure

1. Find measurement A, the distance from the inside top of the tank to the top edge of the riser pipe as shown in Figure 1. If the tank is equipped with a manway, be sure to include the extra height as shown in Figure 2.

   When installing the A1100EVR Overfill Prevention Valve below the spill containment drain valve as required in California, measurement A is the distance between the inside top of the tank to the top edge of the riser pipe as shown in Figure 3.

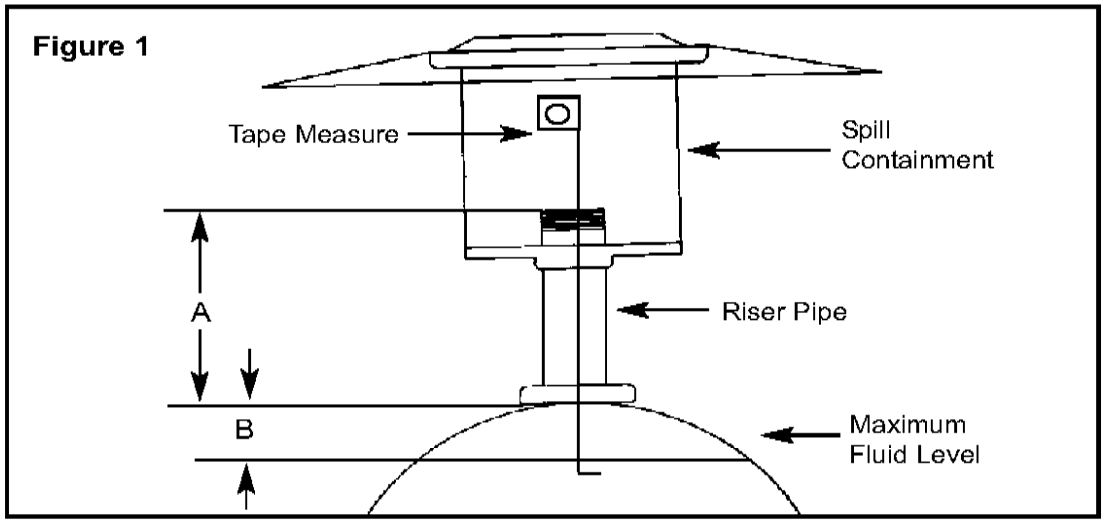

Riser Pipe With Spill Containment

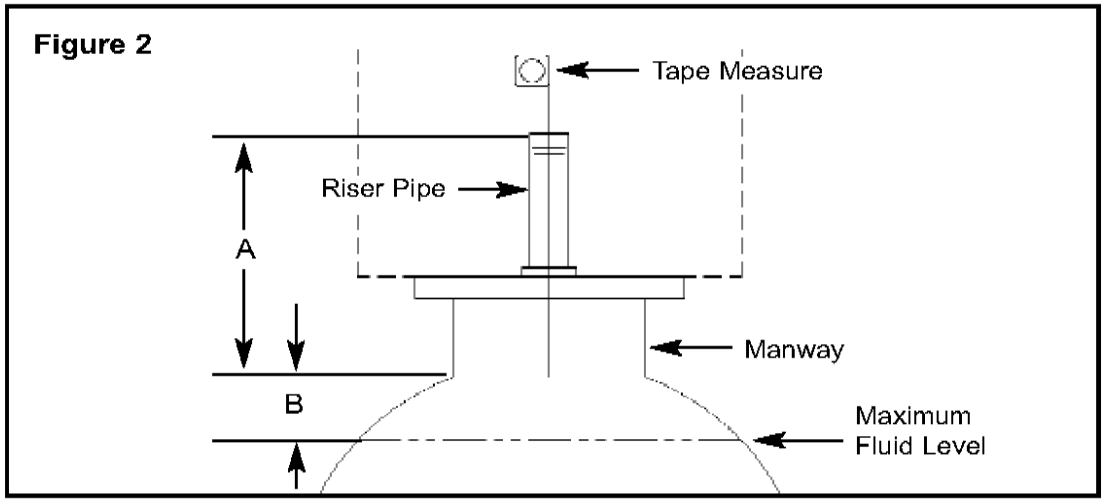

Riser Pipe Installed On Manway

15627 Arrow Highway, Irwindale, California 91706
Phone (626) 962-6646; Out of state calls (800) 4CNI-MFG; Fax (626) 962-4854
Website: www.cni-mfg.com Email: info@cni-mfg.com

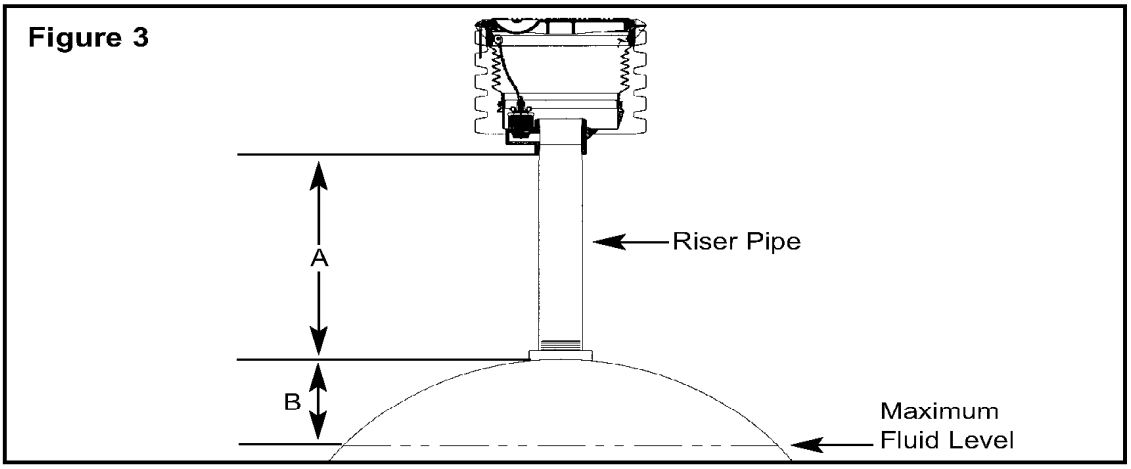

A1100EVR Overfill Prevention Valve Installed Below Drain Valve

2. Find measurement B from the chart below, the distance from the maximum fluid level allowed to the inside top of the tank. The calculations are based on cylindrical tanks with flat ends. For exact dimensions, consult the manufacturer's tank charts. Local requirements may limit fill capacity to 95%.

Tank Diameter		**95% Shut-off B Dimension**	
Feet	Meters	Inches	mm
6.5'	1.98	7.5"	190
7.0'	2.13	8.0"	203
7.6'	2.29	9.0"	229
8.0'	2.44	9.5"	241
8.2'	2.50	9.5"	241
8.5'	2.59	10.0"	254
9.0'	2.74	10.5"	267
9.5'	2.90	11.0"	279
10.0'	3.05	11.5"	292
12.0'	3.66	14.0"	336

IMPORTANT: The A1100EVR Overfill Prevention Valve is not recommended for tanks under 6.5' (1.98 m) in diameter.

3. Find measurement C, add measurements A and B minus 3 inches. Measure and cut the top drop tube to the required length.

   Example: Top drop tube cut length, C = A + B - 3"

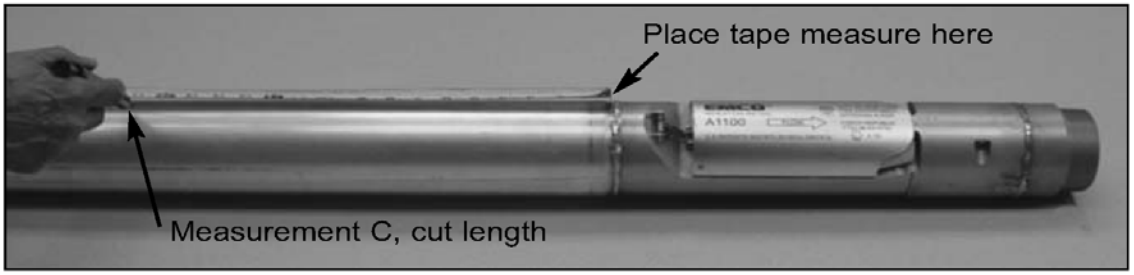

3

4. Carefully cut the top drop tube using a hacksaw equipped with a fine tooth blade to ensure a straight 90-degree cut.
Caution: **Do not use a power saw, pipe or tubing cutter as this may result in damage to the top drop tube, voiding warranty.**

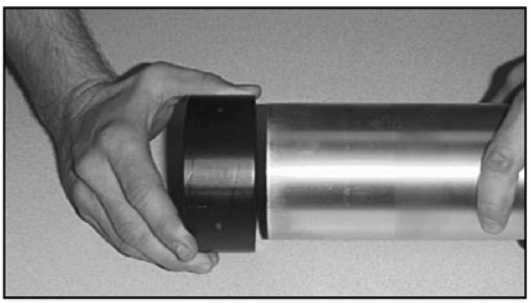

5. Slide the Emco Wheaton Retail Drill Fixture p/n 566675 over the top drop tube until the edge bottoms out against the inside ridge.

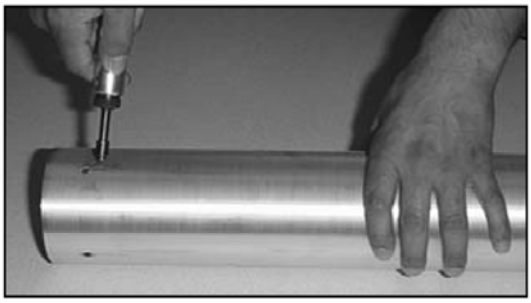

6. Drill four 13/64 diameter holes through the top drop tube. Remove the drill fixture from the top drop tube. Using a de-burring tool equipped with a #10 blade, carefully remove any sharp burrs around the inside area of the mounting holes.

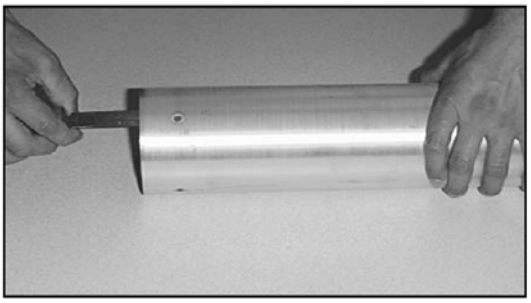

7. Using a fine blade hand file, carefully remove all burrs from the inside and outside edge of the top drop tube. File the edge of the top drop tube square and remove all rough edges.

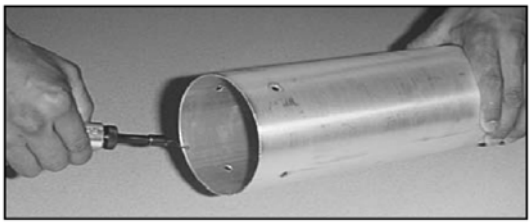

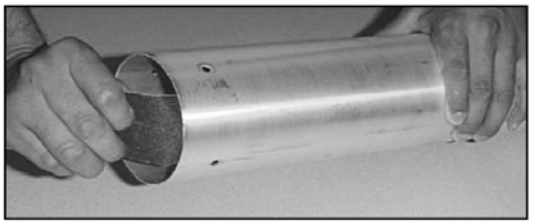

8. Using a de-burring tool equipped with a #10 blade, carefully remove the sharp cutting ring from the inside edge of the top drop tube. Lightly sand the inside area of the top drop tube and mounting holes using 150-grit size emery cloth. Clean and remove any sanding debris.

Caution: **Failure to perform this procedure will damage the O-ring seal during the installation of the A1100EVR riser collar, voiding warranty.**

15627 Arrow Highway, Irwindale, California 91706
Phone (626) 962-6646; Out of state calls (800) 4CNI-MFG; Fax (626) 962-4854
Website: www.cni-mfg.com Email: info@cni-mfg.com

A1100EVR Riser Collar to Top Drop Tube Installation Procedure

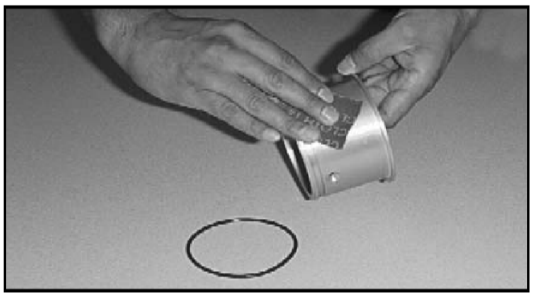

9. Carefully remove the O-ring seal from the A1100EVR riser collar. Lightly sand the outside area using 150-grit size emery cloth. Clean and remove any sanding debris and re-install O-ring.

10. Apply a 1/2 inch bead of Seal-All sealant completely around the O-ring seal and outside area of the A1100EVR riser collar. Verify the O-ring seal is properly secured inside the machined groove.

11. Slide the A1100EVR riser collar inside the top drop tube and align the four holes.

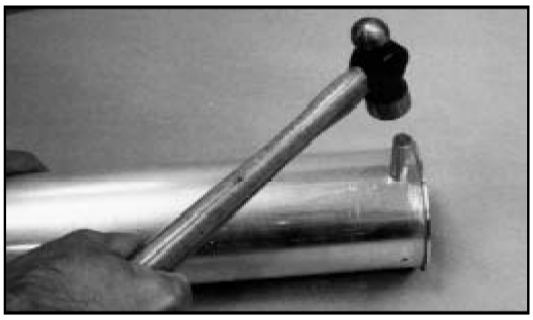

12. Using the indenter tool and a hammer, apply a sharp blow to counter sink each individual hole before attempting to install the pop rivets.

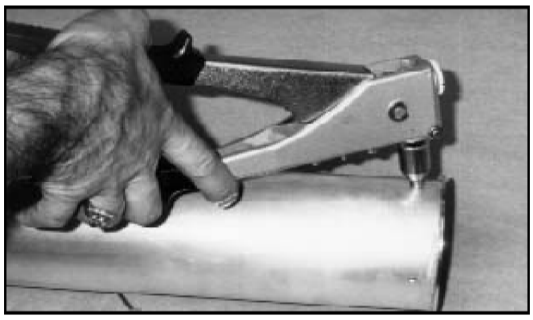

13. Using only the factory supplied pop rivets, apply a good amount of the Seal-All Sealant around the base of each pop rivet before installing into each of the four holes. Using the pop rivet gun, permanently fasten the A1100EVR riser collar to the top drop tube.

14. Clean and remove all excess sealant around the top of the A1100EVR riser collar and pop rivets.

IMPORTANT: The Seal-All sealant must cure for a minimum of 24 hours before installing into the underground storage tank.

15627 Arrow Highway, Irwindale, California 91706
Phone (626) 962-6646; Out of state calls (800) 4CNI-MFG; Fax (626) 962-4854
Website: www.cni-mfg.com Email: info@cni-mfg.com

A1100EVR Overfill Prevention Valve to Lower Drop Tube Installation Procedure

15. Apply pipe thread seal compound to the male threads of the A1100EVR base.

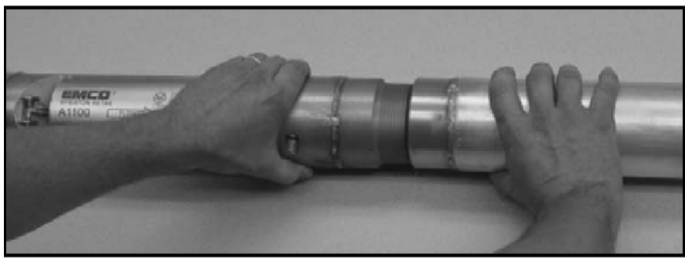

16. Manually tighten the male threaded end of the A1100EVR base to the female threaded end of the lower drop tube to avoid cross threading.

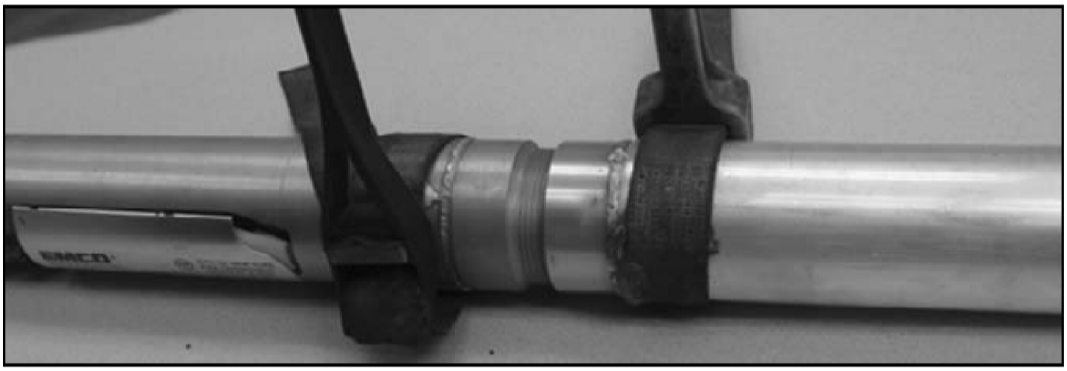

17. Using two fabric strap wrenches, tighten and secure the A1100EVR base to the lower drop tube.

IMPORTANT: Once the Seal-All sealant has cured for a minimum of 24 hours and before installing the A1100EVR Overfill Prevention Valve into the underground storage tank, a leak tightness integrity test must be performed.

Begin by sealing both ends of the A1100EVR Overfill Prevention Valve with inflatable plumber's plugs. Apply a maximum pressure of 2 inches of water column. Should the leak rate exceed the allowable limit of 0.17 CFH, locate the leak point by spraying soap solution along the outside of the A1100EVR Overfill Prevention Valve.

CAUTION: Do not exceed the maximum presssure of 2 inches of water column. This will damage the A1100 Overfill Prevention Valve and result in voiding the warranty.

15627 Arrow Highway, Irwindale, California 91706
Phone (626) 962-6646; Out of state calls (800) 4CNI-MFG; Fax (626) 962-4854
Website: www.cni-mfg.com Email: info@cni-mfg.com

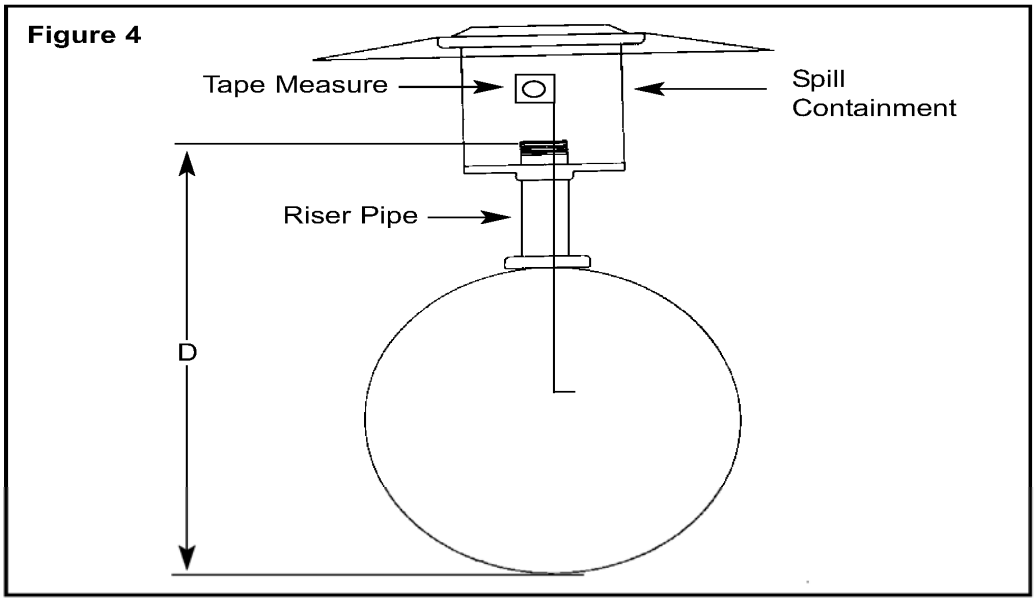

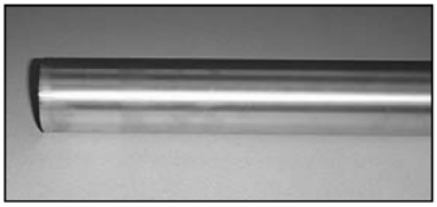

18. Find measurement D, the distance between the top of the riser pipe and the bottom of the tank as shown in Figure 4. Subtract 6 inches, measure and cut the bottom of the lower drop tube square.

IMPORTANT: Do not apply a 45 degree miter cut to the very bottom of the lower drop tube.

A1100EVR Overfill Prevention Valve to Tank Riser Pipe Installation Procedure

19. Once completely assembled, turn the A1100EVR Overfill Prevention Valve upside down and shake vertically to remove any metal chips or debris left from the cutting, drilling and sanding process. Locate the A1100EVR Overfill Prevention Valve over the riser pipe with the A1100 riser collar pointing upward. Carefully lower the A1100EVR Overfill Prevention Valve into the tank until the A1100EVR riser collar rests on the edge of the riser pipe. Verify that the A1100EVR riser collar O-ring is installed and properly secured.

15627 Arrow Highway, Irwindale, California 91706
Phone (626) 962-6646; Out of state calls (800) 4CNI-MFG; Fax (626) 962-4854
Website: www.cni-mfg.com Email: info@cni-mfg.com

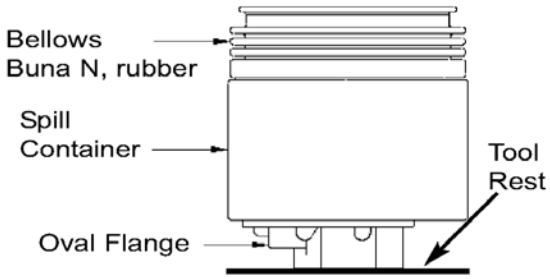

Containment Installation/Removal Tool p/n EVRSYS116

20. Apply a non-hardening gasoline resistant pipe thread seal compound to the upper male threads of the riser pipe. Manually tighten the spill containment assembly (CON2, 205P and 214P) onto the riser pipe. Place the CNI Manufacturing Containment Installation/Removal Tool p/n EVRSYS116 on top of tool rest, torque the oval flange to an indicated value (IV) on the torque wrench between 153-157 ft-lbs. if using a 26 inch torque wrench, and an (IV) of 163-167 ft-lbs. if using a 36-inch torque wrench. This gives an actual torque value of 195 to 200 ft-lbs.

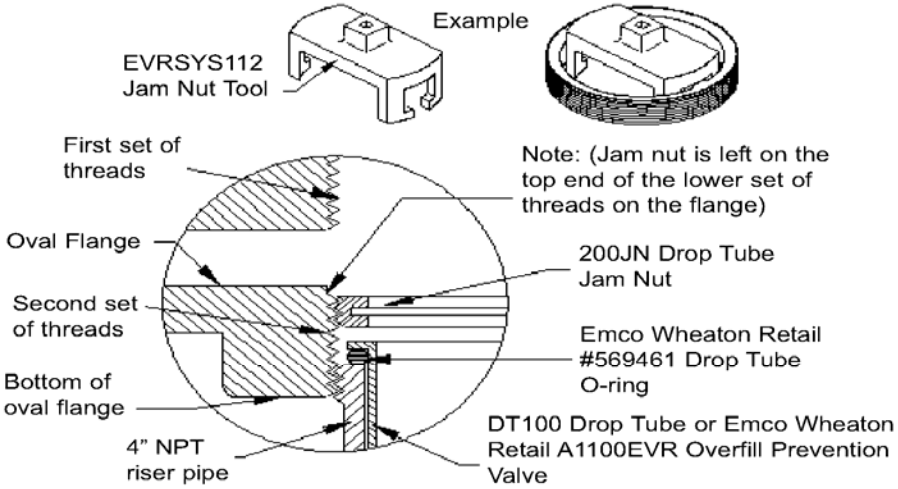

IMPORTANT: The CNI Manufacturing Jam Nut Tool p/n EVRSYS112 must be ordered separately, the Jam Nut p/n 200JN is only used on the product side. For ease of installation, the Jam Nut p/n 200JN is supplied with the spill containment assemblies CON2, 205P and 214P.

IMPORTANT: Each time the Jam Nut p/n 200JN is removed, a coat of anti-seize compound must be applied to the threads before re-installing.

21. Manually screw the Jam Nut into the spill containment assembly opening until it rests against the top of the A1100EVR riser collar. Using the CNI Manufacturing Jam Nut Installation/ Removal Tool p/n EVRSYS112 torque the Jam Nut to 45 foot-pounds.

Fill Adapter to Riser Pipe Installation Procedure

22. Before re-installing the fill adapter, verify that the flat gasket is installed and properly secured. When installing an Emco Wheaton Swivel Fill Adapter, please refer to the A0030-124 or A0030-124S Installation Instructions.

15627 Arrow Highway, Irwindale, California 91706
Phone (626) 962-6646; Out of state calls (800) 4CNI-MFG; Fax (626) 962-4854
Website: www.cni-mfg.com Email: info@cni-mfg.com

PREVENTIVE MAINTENANCE

1. Annually, conduct a visual inspection of the flapper valve assembly located inside the A1100EVR Overfill Prevention Valve. Begin by removing the spill containment lid and fill adapter cap, looking down over the fill opening, verify that the flapper valve assembly is open and free of any foreign objects that can block or restrict the flow of gasoline into the underground storage tank during a fuel delivery.
2. Annually, verify leak tightness integrity of the A1100EVR Overfill Prevention Valve by performing ARB test procedure TP-201.1D.

PERFORMANCE SPECIFICATIONS

This component was factory tested to, and met, the following specifications.

1. TP-201.1D - Meets or exceeds the allowable maximum leakrate of 0.17 CFH @ 2.00 inches of water.

IMPORTANT: Leave these installation instructions with the station owner and/or operator.

15627 ARROW HIGHWAY, IRWINDALE, CALIFORNIA 91706
PHONE (626) 962-6646; OUT OF STATE CALLS (800) 4CNI-MFG; FAX (626) 962-4854
WEBSITE: WWW.CNI-MFG.COM EMAIL: INFO@CNI-MFG.COM

WARRANTY POLICY

Emco Wheaton Retail Corporation products are warranted to be free from defects in material and workmanship under normal use and service for a period of twelve (12) months from the date of manufacture.

Emco Wheaton Retail Corporation shall, at its option, repair or replace that part which proves to be defective. This warranty is void unless the original purchaser returns the claimed defective item to Emco Wheaton Retail Corporation for inspection to determine whether the claimed defect is covered by this warranty.

The exclusive and sole remedy under this warranty is repair or replacement of the defective part. Emco is not responsible for claims for damage caused by improper installation or maintenance; corrosive fluids; misuse of the product or use the product for other than its intended purpose; or accident, acts of God, or natural phenomena. Emco will not pay for labor or related expenses, nor shall Emco be liable for any incidental, consequential or exemplary damages. This warranty is void if the Emco Wheaton Retail Corporation product has been previously repaired with parts not approved by Emco Wheaton Retail Corporation.

Emco Wheaton Retail Corporation warrants the workmanship and materials to be free of defects and will comply with the performance standards of California ARB CP-201 for a period of one (1) year from the date of installation or fourteen months from the date of shipment from Emco Wheaton Retail Corporation.

EMCO WHEATON RETAIL CORPORATION MAKES NO OTHER WARRANTIES, EXPRESS OR IMPLIED, (WHETHER WRITTEN OR ORAL), INCLUDING BUT NOT LIMITED TO ANY IMPLIED WARRANTY OF MERCHANTABILITY OR FITNESS FOR ANY PARTICULAR PURPOSE.

Emco Wheaton Retail Corp.
2300 Industrial Park Dr. • Wilson, NC 27893
252-243-0150 • 252-243-4759 (fax)
619-421-1743 (Technical Services, California)

p/n 569309
Rev. H, 03/07

Figure A-10
Installation Instructions for Emco Wheaton Swivel Fill (Product) Adapter
Retail A0030-124

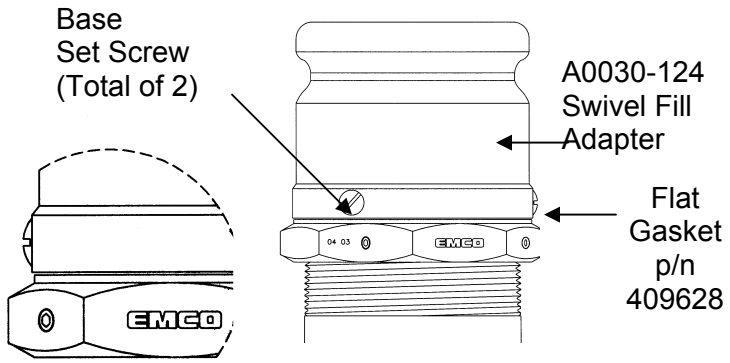

IMPORTANT: Do not use pipe thread sealant compound when installing the swivel product adapter. These instructions are tailored to CNI Mfg. System and differ from the EMCO Wheaton Retail system instructions. CNI Mfg. has a different torque assigned to the adapter as well as requires the use of CNI Mfg. Swivel Adapter Installation/Removal Tool p/n EVRSYS106 for installation and removal of the swivel adapters.

1) The top edge of the top riser nipple must be filed flat and square, with threads free of all debris to insure a proper sealing surface between the riser nipple and the base of the swivel product adapter. Verify squareness with T-square or bevel square.
2) Using a 5/32nd inch Allen® wrench, remove both set screws from the base of the swivel product Adapter.
3) Before installing the swivel product adapter, verify that the flat gasket is properly in place. Manually tighten the swivel product adapter onto the top riser nipple to avoid cross threading. Using the CNI Mfg. Rotatable Adapter Tool p/n EVRSYS106, torque the swivel product Adapter to 35 ft-lbs.
4) Apply a small amount of Loctite model® #222MS on both set screws. Reinstall the two set screws and torque them to 20 inch pounds using the 5/32nd inch Allen® wrench head adapter.

PREVENTATIVE MAINTENANCE

Static Torque Test

Annually verify the static torque of the swivel product Adapters by performing ARB test procedure TP-201.1B using CNI Mfg. Swivel Torque Test Tool p/n EVRSYS100 rather than Phil-Tite Torque Test Tool p/n 6004 as specified in Section 5.2 of TP-201.1B. The Phil-Tite tool is not compatible with CNI Mfg. Dust caps.

If the swivel product Adapter fails to meet the test requirements, replace both O-rings using EMCO Wheaton O-ring kit P/N 493995 and re-test.

Leak Tightness Integrity Test

Annually verify the leak tightness integrity of the swivel product Adapters while performing ARB test procedures TP201.1C or TP201.1D on the drop tube(s).

If the swivel product Adapter fails to meet the leak tightness integrity test requirements, replace both O-rings using EMCO Wheaton O-ring kit P/N 493995 or flat gasket P/N 409628 and re-test

Emco Wheaton Retail A0030-124 Swivel Fill (Product) Adapter (cont'd)

Performance Specification

This component was factory tested to, and met, the following specifications.
ARB TP-201.1B – Complies with the allowable maximum 108 inch-pounds average static torque, and 360º rotation requirement.
Meets ARB Cam and Groove Standard.

WARRANTY POLICY

Emco Wheaton Retail Corporation products are warranted to be free from defects in material and workmanship under normal use and service for a period of twelve (12) months from the date of manufacture.
Emco Wheaton Retail Corporation shall, at its option, repair or replace that part which proves to be defective. This warranty is void unless the original purchaser returns the claimed defective item to Emco Wheaton Retail Corporation for inspection to determine whether the claimed defect is covered by this warranty.
The exclusive and sole remedy under this warranty is repair or replacement of the defective part. Emco is not responsible for claims for damage caused by improper installation or maintenance; corrosive fluids; misuse of the product or use the product for other than its intended purpose; or accident, acts of God, or natural phenomena. Emco will not pay for labor or related expenses, nor shall Emco be liable for any incidental, consequential or exemplary damages. This warranty is void if the Emco Wheaton Retail Corporation product has been previously repaired with parts not approved by Emco Wheaton Retail Corporation.
Emco Wheaton Retail Corporation warrants the workmanship and materials to be free of defects and will comply with the performance standards of California ARB CP-201 for a period of one (1) year from the date of installation or fourteen months from the date of shipment from Emco Wheaton Retail Corporation.
EMCO WHEATON RETAIL CORPORATION MAKES NO OTHER WARRANTIES, EXPRESS OR IMPLIED, (WHETHER WRITTEN OR ORAL), INCLUDING BUT NOT LIMITED TO ANY IMPLIED WARRANTY OF MERCHANTABILITY OR FITNESS FOR ANY PARTICULAR PURPOSE.

Emco Wheaton Retail Corp.
2300 Industrial Park Dr. • Wilson, NC 27893
252-243-0150 • 252-243-4759 (fax)
619-421-1743 (Technical Services, California)

p/n 568679
Rev. A, 09/03

Laser Etched
Identification Label

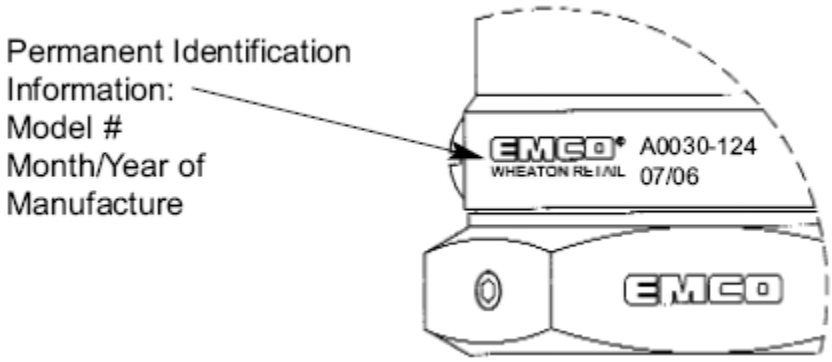

Figure A-11
Installation Instructions for Emco Wheaton Swivel Vapor Adapter Retail A0076-124

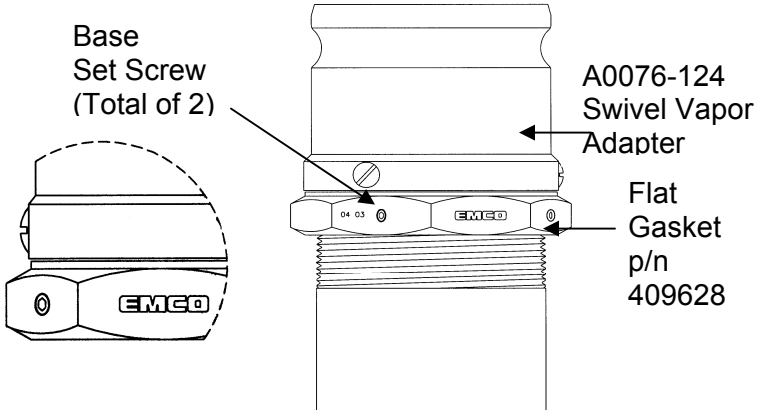

IMPORTANT: Do not use pipe thread sealant compound when installing the swivel vapor adapter. These instructions are tailored to CNI Mfg. System and differ from the EMCO Wheaton Retail system instructions. CNI Mfg. has a different torque assigned to the adapter as well as requires the use of CNI Mfg. Swivel Adapter Installation/Removal Tool p/n EVRSYS106 for installation and removal of the swivel adapters.

1) The top edge of the top riser nipple must be filed flat and square, with threads free of all debris to insure a proper sealing surface between the riser nipple and the base of the swivel vapor adapter. Verify squareness with T-square or bevel square.
2) Using a 5/32nd inch Allen® wrench, remove both set screws from the base of the swivel vapor adapter.
3) Before installing the swivel vapor adapter, verify that the flat gasket is properly in place. Manually tighten the swivel vapor adapter on to the top riser nipple to avoid cross threading. Using the CNI Mfg. Rotatable Adapter Tool p/n EVRSYS106, torque the swivel vapor Adapter to 35 ft-lbs.
4) Apply Loctite model® #222MS on both set screws. Reinstall the two set screws and torque them to 20 inch pounds using the 5/32nd inch Allen® wrench head adapter.

PREVENTATIVE MAINTENANCE

Static Torque Test

Annually verify the static torque of the swivel vapor adapters by performing ARB test procedure TP-201.1B using CNI Mfg. Swivel Torque Test Tool p/n EVRSYS100 rather than Phil-Tite Torque Test Tool p/n 6004 as specified in Section 5.2 of TP-201.1B. The Phil-Tite tool is not compatible with CNI Mfg. Dust caps.

If the swivel vapor adapter fails to meet the test requirements, replace both O-rings using EMCO Wheaton O-ring kit P/N 493995 and re-test.

Leak Tightness Integrity Test

Annually verify the leak tightness integrity of the swivel vapor adapters while performing ARB test procedure TP201.3.

If the swivel vapor adapter fails to meet the leak tightness integrity test requirements, replace both O-rings using EMCO Wheaton O-ring kit P/N 493995 or flat gasket P/N 409628 and re-test.

Performance Specification

This component was factory tested to, and met, the following specifications.
ARB TP-201.1B – Complies with the allowable maximum 108 inch-pounds average static torque, and 360º rotation requirement.
Meets ARB Cam and Groove Standard CID A-A-59326.

WARRANTY POLICY

Emco Wheaton Retail Corporation products are warranted to be free from defects in material and workmanship under normal use and service for a period of twelve (12) months from the date of manufacture.
Emco Wheaton Retail Corporation shall, at its option, repair or replace that part which proves to be defective. This warranty is void unless the original purchaser returns the claimed defective item to Emco Wheaton Retail Corporation for inspection to determine whether the claimed defect is covered by this warranty.
The exclusive and sole remedy under this warranty is repair or replacement of the defective part. Emco is not responsible for claims for damage caused by improper installation or maintenance; corrosive fluids; misuse of the product or use the product for other than its intended purpose; or accident, acts of God, or natural phenomena. Emco will not pay for labor or related expenses, nor shall Emco be liable for any incidental, consequential or exemplary damages. This warranty is void if the Emco Wheaton Retail Corporation product has been previously repaired with parts not approved by Emco Wheaton Retail Corporation.
Emco Wheaton Retail Corporation warrants the workmanship and materials to be free of defects and will comply with the performance standards of California ARB CP-201 for a period of one (1) year from the date of installation or fourteen months from the date of shipment from Emco Wheaton Retail Corporation.
EMCO WHEATON RETAIL CORPORATION MAKES NO OTHER WARRANTIES, EXPRESS OR IMPLIED, (WHETHER WRITTEN OR ORAL), INCLUDING BUT NOT LIMITED TO ANY IMPLIED WARRANTY OF MERCHANTABILITY OR FITNESS FOR ANY PARTICULAR PURPOSE.

Emco Wheaton Retail Corp.
2300 Industrial Park Dr. • Wilson, NC 27893
252-243-0150 • 252-243-4759 (fax)
619-421-1743 (Technical Services, California)

p/n 568680
Rev. A, 09/03

Laser Etched Identification Label

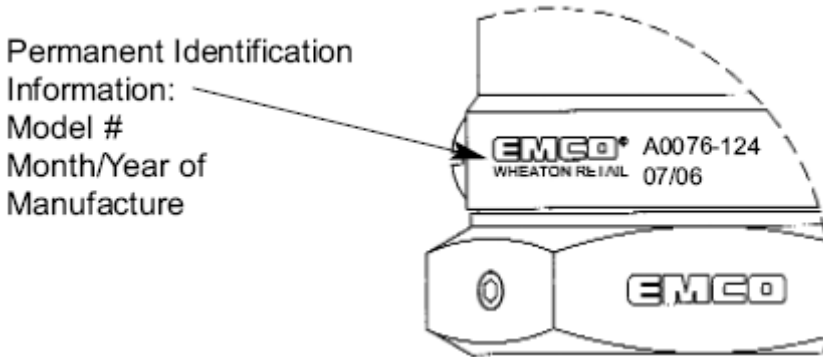

Figure A-12
EMCO Wheaton Retail O-RING Kit #493995, 'Non-S' Series Swivel Adapters

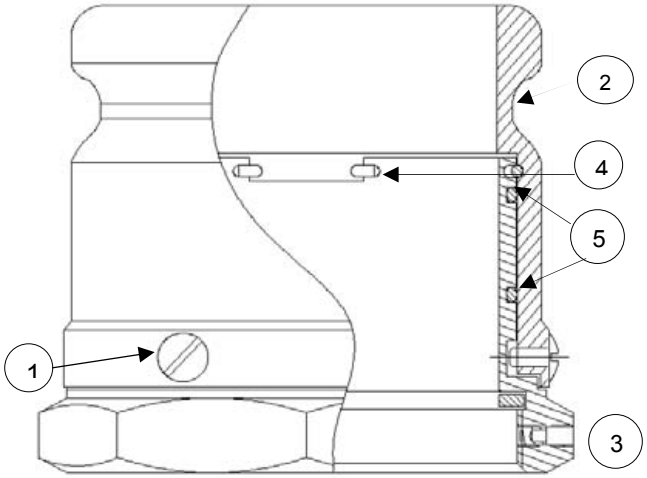

A0030-124 Swivel Fill Adapter

Tools Needed for Product and Vapor Adapters:
Flathead screwdriver, torque screwdriver capable of torque of 20 inch pounds, flathead adapter for torque screwdriver, needle nose pliers, petroleum jelly or gun grease, Loctite#222MS. These instructions are tailored to CNI Mfg. System and differ from the EMCO Wheaton Retail system instructions. CNI Mfg. has a different torque assigned to the adapter as well as requires the use of CNI Mfg. Swivel Adapter Installation/Removal Tool p/n EVRSYS106 for installation and removal of the swivel adapters.

A0030-124 SWIVEL FILL ADAPTER

1. Using a flathead screwdriver, remove all three screws (item 1).
2. Separate the fill top (item 2) from the base of the swivel adapter (item 3) while compressing the wire clip ends (items 4) with a pair of needle nose pliers, from the inside of the swivel adapter.
3. Remove the wire clip and the existing o-rings (items 5) from the base of the swivel adapter.
4. Clean and remove all existing grease, dirt, debris, etc. from both the fill top and the base of the swivel adapter.
5. Install new o-rings onto the base of the swivel adapter and lubricate with petroleum jelly or gun grease.
6. Reinstall the wire clip onto the base of the swivel adapter.
7. Reassemble the fill top and base of the swivel adapter in the reverse order from above.
8. Apply a small amount of Loctite #222MS on the three screws and torque screws to approximately 20 in. pounds.

A0076-124 SWIVEL VAPOR ADAPTER instructions follow on next page.

Figure A-12 (continued)
EMCO Wheaton Retail O-RING Kit #493995, 'Non-S' Series Swivel Adapters

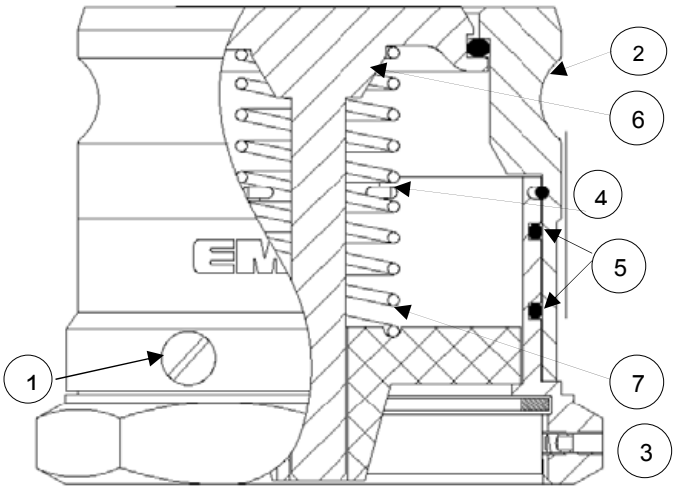

A0076-124 Swivel Vapor Adapter

A0076-124 SWIVEL VAPOR ADAPTER

1. Using a flathead screwdriver, remove all three screws (item 1).
2. Turn the swivel adapter upside down.
3. Position bottom of poppet guide so that the section of wide gap is above the clip. Separate the vapor top (item 2) from the base of the swivel adapter (item 3) by inserting a pair of needle nose pliers between the ribs of the poppet guide and compressing the wire clip ends (item 4).
4. Remove the wire clip and existing o-rings (items 5) from the base of the swivel adapter.
5. Remove the poppet (item 6) and poppet spring (item 7) from the base of the swivel adapter.
6. Clean and remove all existing grease, dirt, debris, etc. from both the vapor top and the base of the swivel adapter.
7. Install new o-rings onto the base of the swivel adapter and lubricate with petroleum jelly or gun grease.
8. Reinstall the wire clip onto the base of the swivel adapter.
9. Insert the poppet spring and then the poppet into the poppet guide.
10. Reassemble the vapor top and base of the swivel adapter in the reverse order from above.
11. Apply a small amount of Loctite #222MS on the three screws and torque to approximately 20 in. pounds.

Figure A-13
EMCO Wheaton Retail Adapter Gasket Kit #409628

EMCO® WHEATON RETAIL

409628
Adapter Gasket Kit

INSTALLATION INSTRUCTIONS

A0030-124S and A0030-124 Swivel Fill Adapters, A0076-12S and A0076-12 Swivel Vapor Adapter, and A0030-014 Probe Adapter

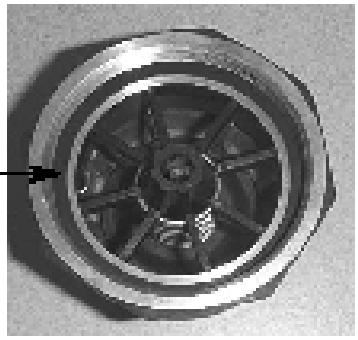

1. Remove exiting gasket.
2. Add new gasket taking care to ensure the gasket is properly secured.

3. Follow instructions for adapter installation.

IMPORTANT: Leave these installation instructions with the station owner and/or operator.

WARRANTY POLICY

Emco Wheaton Retail Corporation products are warranted to be free from defects in material and workmanship under normal use and service for a period of twelve (12) months from the date of manufacture.
Emco Wheaton Retail Corporation shall, at its option, repair or replace that part which proves to be defective. This warranty is void unless the original purchaser returns the claimed defective item to Emco Wheaton Retail Corporation for inspection to determine whether the claimed defect is covered by this warranty.
The exclusive and sole remedy under this warranty is repair or replacement of the defective part. Emco is not responsible for claims for damage caused by improper installation or maintenance; corrosive fluids; misuse of the product or use the product for other than its intended purpose; or accident, acts of God, or natural phenomena. Emco will not pay for labor or related expenses, nor shall Emco be liable for any incidental, consequential or exemplary damages. This warranty is void if the Emco Wheaton Retail Corporation product has been previously repaired with parts not approved by Emco Wheaton Retail Corporation.
Emco Wheaton Retail Corporation warrants the workmanship and materials to be free of defects and will comply with the performance standards of California ARB CP-201 for a period of one (1) year from the date of installation or fourteen months from the date of shipment from Emco Wheaton Retail Corporation.
EMCO WHEATON RETAIL CORPORATION MAKES NO OTHER WARRANTIES, EXPRESS OR IMPLIED, (WHETHER WRITTEN OR ORAL), INCLUDING BUT NOT LIMITED TO ANY IMPLIED WARRANTY OF MERCHANTABILITY OR FITNESS FOR ANY PARTICULAR PURPOSE.

Emco Wheaton Retail Corp.
2300 Industrial Park Dr. • Wilson, NC 27893
252-243-0150 • 252-243-4759 (fax)
619-421-1743 (Technical Services, California)

p/n 568602
Rev. B, 06/06

Figure A-14
Installation Instructions for Emco Wheaton Swivel Fill (Product) Adapter
Retail A0030-124S

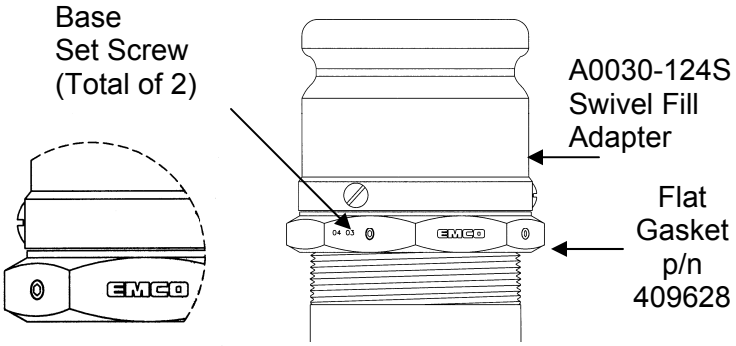

Containment Nipple Pre-Installation Requirements

1. The containment nipple must be properly sized to the required height to avoid clearance limitations between the top of the fill adapter cap and the bottom of the spill containment lid.

2. The top edge of the containment nipple must be filed flat and square, with threads free of all debris to insure a proper sealing surface between the containment nipple and the base of the swivel adapter. Verify squareness with T-square or bevel square.

3. Apply a non-hardening gasoline resistant pipe thread seal compound to the bottom threads of the containment nipple. Manually tighten the containment nipple into the spill containment to avoid cross threading.

Swivel Adapter to Containment Nipple (Note: These instructions are tailored to CNI Mfg. System and differ from the EMCO Wheaton Retail system instructions. CNI Mfg. requires the use of the Swivel Adapter Installation/Removal Tool p/n EVRSYS106 for installation and removal of the swivel adapters as well as having a different torque assigned.)

1. Using a 5/32" Allen wrench, remove both (2) set screws from the base of the swivel adapter.

2. Before installing the swivel adapter on to the containment nipple, verify that the flat gasket is properly in place. Manually tighten the swivel adapter on to the containment nipple to avoid cross threading. Using the CNI Manufacturing p/n EVRSYS106 Swivel Adapter Installation/Removal Tool, torque the swivel adapter to 35 ft-lbs.

IMPORTANT: Do not use pipe thread sealant compound when installing the swivel adapter on to the containment nipple.

3. Apply Loctite model #222MS on both set screws. Re-install and torque to 20 in-lbs.

PREVENTATIVE MAINTENANCE

Static Torque Test
Annually verify the static torque of the swivel product Adapters by performing ARB test procedure TP-201.1B using CNI Mfg. Swivel Torque Test Tool p/n EVRSYS100 rather than

Phil-Tite Torque Test Tool p/n 6004 as specified in Section 5.2 of TP-201.1B. The Phil-Tite tool is not compatible with CNI Mfg. Dust caps.

If the swivel product Adapter fails to meet the test requirements, replace both O-rings using EMCO Wheaton O-ring kit P/N 494301 and re-test.

Leak Tightness Integrity Test

Annually verify the leak tightness integrity of the swivel product Adapters while performing ARB test procedures TP201.1C or TP201.1D on the drop tube(s).

If the swivel product Adapter fails to meet the leak tightness integrity test requirements, replace both O-rings using EMCO Wheaton O-ring kit P/N 494301 or flat gasket P/N 409628 and re-test.

Performance Specification

This component was factory tested to, and met, the following specifications.
ARB TP-201.1B – Complies with the allowable maximum 108 inch-pounds average static torque, and 360º rotation requirement.
Meets ARB Cam and Groove Standard

WARRANTY POLICY

Emco Wheaton Retail Corporation products are warranted to be free from defects in material and workmanship under normal use and service for a period of twelve (12) months from the date of manufacture.
Emco Wheaton Retail Corporation shall, at its option, repair or replace that part which proves to be defective.
This warranty is void unless the original purchaser returns the claimed defective item to Emco Wheaton Retail Corporation for inspection to determine whether the claimed defect is covered by this warranty.
The exclusive and sole remedy under this warranty is repair or replacement of the defective part. Emco is not responsible for claims for damage caused by improper installation or maintenance; corrosive fluids; misuse of the product or use the product for other than its intended purpose; or accident, acts of God, or natural phenomena. Emco will not pay for labor or related expenses, nor shall Emco be liable for any incidental, consequential or exemplary damages. This warranty is void if the Emco Wheaton Retail Corporation product has been previously repaired with parts not approved by Emco Wheaton Retail Corporation.
Emco Wheaton Retail Corporation warrants the workmanship and materials to be free of defects and will comply with the performance standards of California ARB CP-201 for a period of one (1) year from the date of installation or fourteen months from the date of shipment from Emco Wheaton Retail Corporation.
EMCO WHEATON RETAIL CORPORATION MAKES NO OTHER WARRANTIES, EXPRESS OR IMPLIED, (WHETHER WRITTEN OR ORAL), INCLUDING BUT NOT LIMITED TO ANY IMPLIED WARRANTY OF MERCHANTABILITY OR FITNESS FOR ANY PARTICULAR PURPOSE.

Emco Wheaton Retail Corp.
2300 Industrial Park Dr. • Wilson, NC 27893
252-243-0150 • 252-243-4759 (fax)
619-421-1743 (Technical Services, California)

p/n 568679
Rev. A, 09/03

Laser Etched
Identification Label

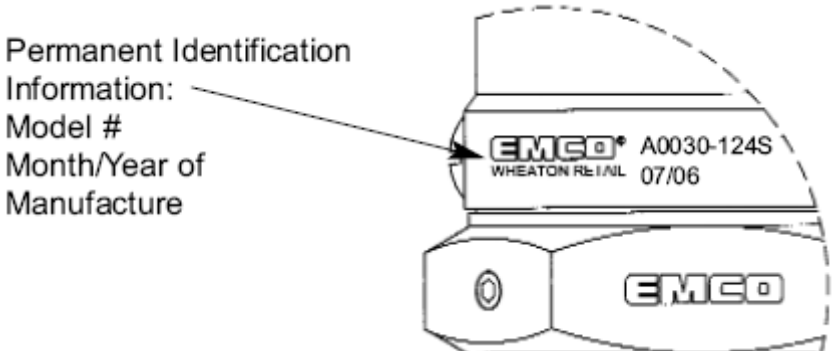

Figure A-15
Installation Instructions for Emco Wheaton Swivel Vapor Adapter Retail A0076-124S

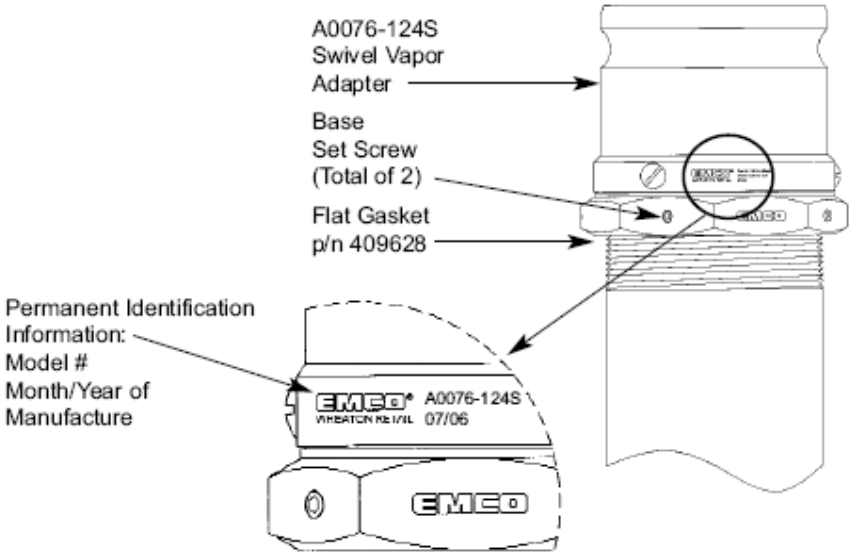

Containment Nipple Pre-Installation Requirements

1. The containment nipple must be properly sized to the required height to avoid clearance limitations between the top of the vapor adapter cap and the bottom of the spill containment lid.

2. The top edge of the containment nipple must be filed flat and square, with threads free of all debris to insure a proper sealing surface between the containment nipple and the base of the swivel adapter. Verify squareness with T-square or bevel square.

3. Apply a non-hardening gasoline resistant pipe thread seal compound to the bottom threads of the containment nipple. Manually tighten the containment nipple into the spill containment to avoid cross threading.

Swivel Adapter to Containment Nipple (Note: These instructions are tailored to CNI Mfg. System and differ from the EMCO Wheaton Retail system instructions. CNI Mfg. requires the use of the Swivel Adapter Installation/Removal Tool p/n EVRSYS106 for installation and removal of the swivel adapters as well as having a different torque assigned.)

1. Using a 5/32” Allen wrench, remove both (2) set screws from the base of the swivel adapter.

2. Before installing the swivel adapter on to the containment nipple, verify that the flat gasket is properly in place. Manually tighten the swivel adapter on to the containment nipple to avoid cross threading. Using the CNI Manufacturing p/n EVRSYS106 Swivel Adapter Installation/Removal Tool, torque the swivel adapter to 35 ft-lbs.

IMPORTANT: Do not use pipe thread sealant compound when installing the swivel adapter on to the containment nipple.

3. Apply Loctite model #222MS on both set screws. Re-install and torque to 20 in-lbs.

PREVENTIVE MAINTENANCE

Static Torque Test

1. Annually verify the static torque of the swivel adapter by performing ARB test procedure TP-201.1B using CNI Mfg. Swivel Torque Test Tool p/n EVRSYS100 rather than Phil-Tite Torque Test Tool p/n 6004 as specified in Section 5.2 of TP-201.1B. The Phil-Tite tool is not compatible with CNI Mfg. Dust caps..
2. If the swivel adapter fails to meet the static torque test requirements, replace both o-rings with the Emco Wheaton o-ring kit p/n 494301 and re-test.

Leak Tightness Integrity Test

1. Annually verify leak tightness integrity of the swivel adapter by performing ARB test procedure TP-201.3.

2. If the swivel adapter fails to meet the leak tightness integrity test requirements, replace both o-rings with the Emco Wheaton o-ring kit p/n 494301 or flat gasket p/n 409628 and re-test.

PERFORMANCE SPECIFICATIONS

This component was factory tested to, and met, the following specifications:
1. TP-201.1B - Complies with the allowable maximum: 108 in-lbs. average static torque and 360 degrees rotation.
2. Meets ARB Cam and Groove Specifications.

IMPORTANT: Leave these installation instructions with the station owner and/or operator.

WARRANTY POLICY

Emco Wheaton Retail Corporation products are warranted to be free from defects in material and workmanship under normal use and service for a period of twelve (12) months from the date of manufacture. Emco Wheaton Retail Corporation shall, at its option, repair or replace that part which proves to be defective. This warranty is void unless the original purchaser returns the claimed defective item to Emco Wheaton Retail Corporation for inspection to determine whether the claimed defect is covered by this warranty. The exclusive and sole remedy under this warranty is repair or replacement of the defective part. Emco is not responsible for claims for damage caused by improper installation or maintenance; corrosive fluids; misuse of the product or use the product for other than its intended purpose; or accident, acts of God, or natural phenomena. Emco will not pay for labor or related expenses, nor shall Emco be liable for any incidental, consequential or exemplary damages. This warranty is void if the Emco Wheaton Retail Corporation product has been previously repaired with parts not approved by Emco Wheaton Retail Corporation. Emco Wheaton Retail Corporation warrants the workmanship and materials to be free of defects and will comply with the performance standards of California ARB CP-201 for a period of one (1) year from the date of installation or fourteen months from the date of shipment from Emco Wheaton Retail Corporation.
EMCO WHEATON RETAIL CORPORATION MAKES NO OTHER WARRANTIES, EXPRESS OR IMPLIED, (WHETHER WRITTEN OR ORAL), INCLUDING BUT NOT LIMITED TO ANY IMPLIED WARRANTY OF MERCHANTABILITY OR FITNESS FOR ANY PARTICULAR PURPOSE.

Emco Wheaton Retail Corp.
2300 Industrial Park Dr. • Wilson, NC 27893
252-243-0150 • 252-243-4759 (fax)
619-421-1743 (Technical Services, California)

p/n 569303
Rev. D, 04/07

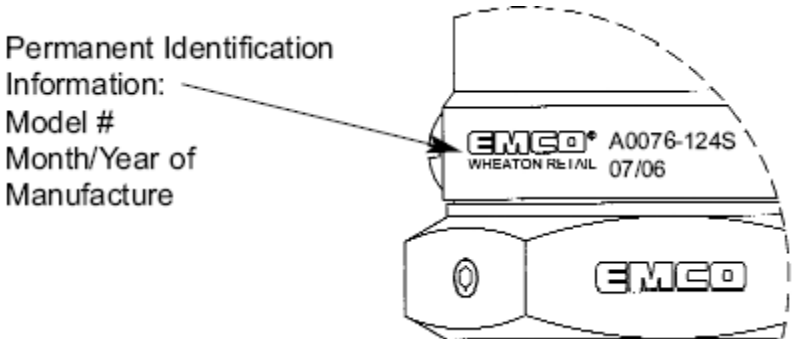

Figure A-16
EMCO Wheaton Retail O-ring Kit #494301 for 'S' Series Swivel Adapters

EMCO®
WHEATON RETAIL

494301
O-RING KIT

INSTALLATION INSTRUCTIONS

A0030-124S
Swivel Fill Adapter

Required Tools:
- Flathead screwdriver
- Torque screwdriver/20 in-lbs setting
- Flathead adapter for torque driver
- Petroleum jelly or gun grease
- Loctite #222MS

These instructions are tailored to CNI Mfg. System and differ from the EMCO Wheaton Retail system instructions. CNI Mfg. requires the use of the Swivel Adapter Installation/Removal Tool p/n EVRSYS106 for installation and removal of the swivel adapters as well as having a different torque assigned.

1. Using a flathead screwdriver, loosen and remove all three stainless steel screws from the swivel adapter.

2. Separate the fill top from the base of the swivel adapter by slowly rotating and pulling upward.

Emco Wheaton Retail Corp.
2300 Industrial Park Dr. • Wilson, NC 27893
252-243-0150 • 252-243-4759 (fax)
619-421-1743 (Technical Services, California)

p/n 568903
Rev. B 06/06

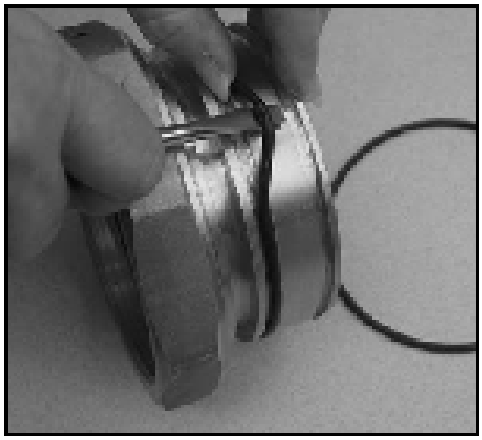

3. Remove both of the existing o-rings from the base of the swivel adapter.

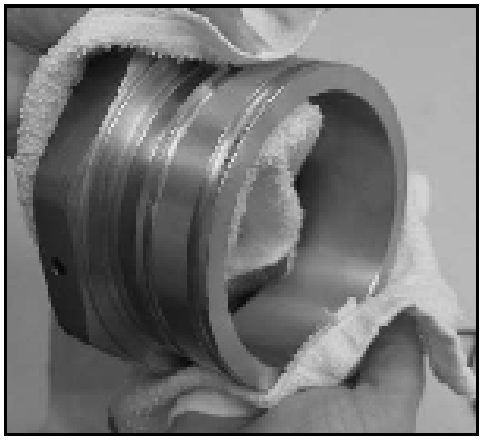

4. Clean and remove all existing grease, dirt, debris, etc. from the outside of the base.

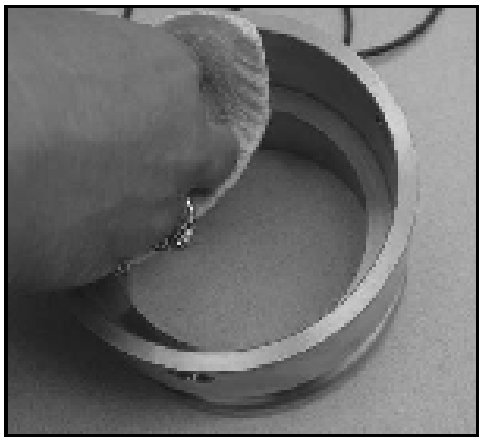

5. Clean and remove all existing grease, dirt, debris, etc. from the inside of the fill top.

6. Carefully reinstall a new set of o-rings onto the base and lubricate with petroleum jelly or gun grease.

7. Reassemble the swivel adapter by placing the fill top over the base. Rotate and push downward slowly until both pieces bottom out.

8. Apply a small amount of Loctite #222MS on each of the three stainless steel screws. Reinstall and torque to 20 in.-lbs.

5. Clean and remove all existing grease, dirt, debris, etc. from the inside of the fill top and the outside of the base.

6. Carefully re-install a new set of o-rings onto the base and lubricate with petroleum jelly or gun grease.

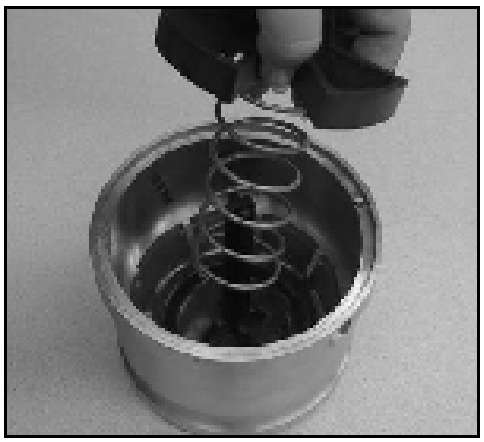

7. Re-install the poppet guide and poppet spring onto the stem of the vapor poppet which is located inside the vapor top of the swivel adapter.

8. Reassemble by placing the vapor base over the vapor top. Push downward slowly until both pieces bottom out. Apply a small amount of Loctite #222MS on all three stainless steel screws. Reinstall and torque to 20 in.-lbs.

IMPORTANT: Leave these installation instructions with the station owner and/or operator.

WARRANTY POLICY

Enco Wheaton Retail Corporation products are warranted to be free from defects in material and workmanship under normal use and service for a period of twelve (12) months from the date of manufacture.

Enco Wheaton Retail Corporation shall, at its option, repair or replace that part which proves to be defective. This warranty is void unless the original purchaser returns the claimed defective item to Enco Wheaton Retail Corporation for inspection to determine whether the claimed defect is covered by this warranty.

The exclusive and sole remedy under this warranty is repair or replacement of the defective part. Enco is not responsible for claims for damage caused by improper installation or maintenance; corrosive fluids; misuse of the product or use the product for other than its intended purpose; or accident, acts of God, or natural phenomena. Enco will not pay for labor or related expenses, nor shall Enco be liable for any incidental, consequential or exemplary damages. This warranty is void if the Enco Wheaton Retail Corporation product has been previously repaired with parts not approved by Enco Wheaton Retail Corporation.

Enco Wheaton Retail Corporation warrants the workmanship and materials to be free of defects and will comply with the performance standards of California ARB CP-201 for a period of one (1) year from the date of installation or fourteen months from the date of shipment from Enco Wheaton Retail Corporation.

ENCO WHEATON RETAIL CORPORATION MAKES NO OTHER WARRANTIES, EXPRESS OR IMPLIED, (WHETHER WRITTEN OR ORAL), INCLUDING BUT NOT LIMITED TO ANY IMPLIED WARRANTY OF MERCHANTABILITY OR FITNESS FOR ANY PARTICULAR PURPOSE.

Figure A-17
Instructions for CNI Mfg. RP12-Push Drain Valve Assembly and Maintenance

Maintenance Steps:

NOTE: The O-ring (#7) and the plunger gasket need to be replaced with new ones each time the drain is disassembled (gasket kit DVK1).

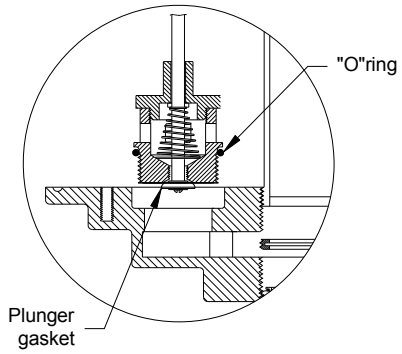

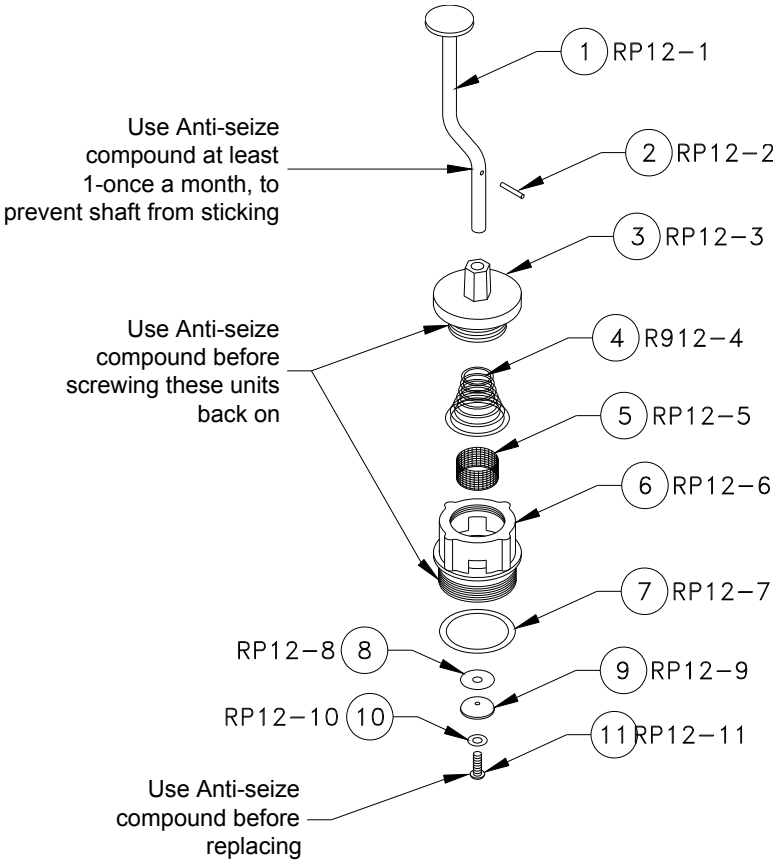

1. Unscrew the drain valve.
2. Unscrew the cap (#3).
3. Remove screw (#11) and washer (#10).
4. Pull the shaft (#1).
5. Clean and check the screen (#5), replace if it's damaged.
6. Clean all parts, and ensure that the O-ring (#7, p/n RP12-7) and the plunger gasket #9, p/n RP12-9) have been replaced with new ones.
7. Ensure anti-seize compound is applied to the components noted in exploded drawing on this page as well as
8. To assemble, reverse previous steps.
9. Screw in the drain valve until bottomed out and then an additional 360 degree turn.
10. Screw the cap (#3) back on until finger tight.

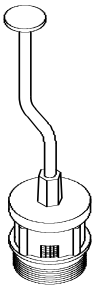

Note: Maintenance must be conducted once every 18 months, and/or if the drain valve fails ARB drop tube tests TP201.1C, or TP201.1D or if valve causes failure of ARB pressure decay test TP201.3. If the drain valve assembly fails, it needs to be removed, disassembled and a new gasket kit installed (DVK1).

Performance Specification: Drain Valve leak rate is not to exceed 0.17 CFH at 2.0 inches of water column pressure.

Figure A-18
Maintenance Instructions for CNI Mfg. Dust Caps and Cap Gasket

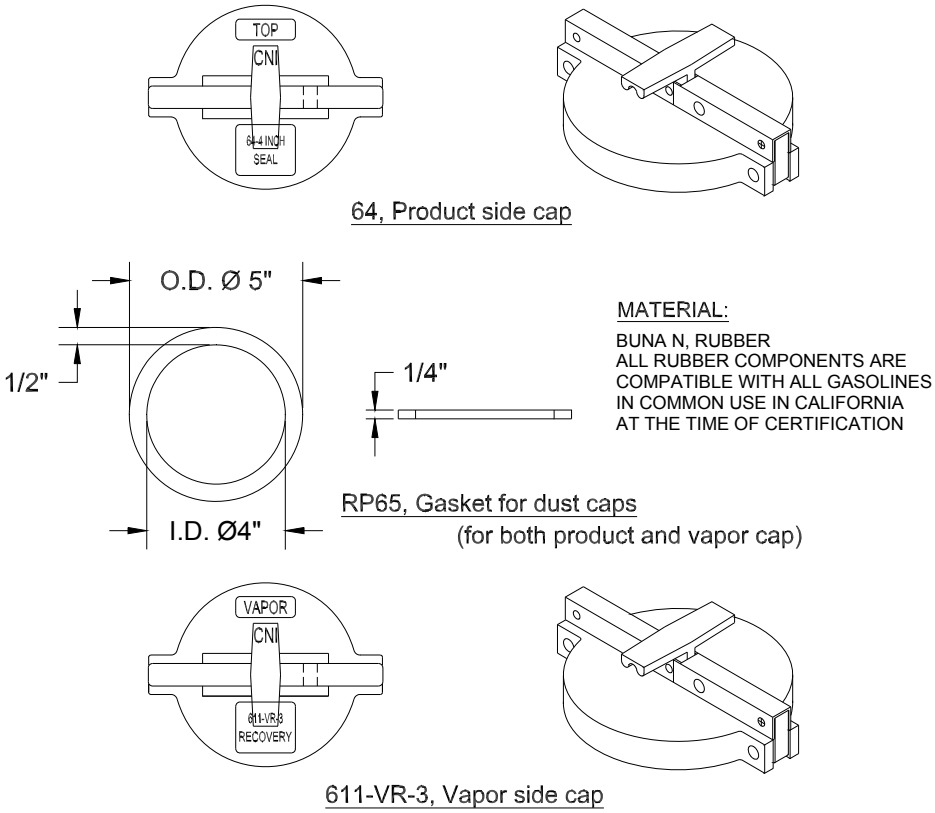

Maintenance
Annually inspect the gasket in the dust cap. If the gasket is worn or the cap spins freely on the Adapter, replace the gasket with a new gasket using part number RP65.

Warranty
CNI Mfg. (CNI) warrants that products sold by it are free from defects in material and workmanship for a period of one year from the date of manufacture by CNI or one year from date of installation. Proof of purchase may be required. As the exclusive remedy under this limited warranty, CNI will at its sole discretion, repair, replace, or issue credit for future orders for any product that may prove defect within the one year date of manufacture period (repairs, replacements, or credits may be subject to prorated warranty for the remainder of the original warranty period, complete proper warranty claim documentation required.) This warranty shall not apply to any product that has been altered in any way, which has been repaired by any party other than a service representative authorized by CNI, or when failure is due to misuse, or improper installation or maintenance. CNI shall have no liability whatsoever for special, incidental or consequential damages to any party, and shall have no liability for the cost of labor, freight, excavation, clean up, downtime, removal, installation, loss of profit, or any other cost or charges.

For any product certified to California 2001 standards, CNI warrants that product sold by it are free from defects in material and workmanship for a period of one year from date of manufacture or one year from date of installation.

Figure A-19
Example of CNI Mfg. Warranty Card

WARRANTY

Date of Manufacture: Date of invoice

CNI warrants that products sold by it are free from defects in material and workmanship for a period of one year from date of manufacture (Date of invoice) or one year from date of installation.

All components are factory tested and have met all applicable performance standards and specifications.

Our obligation under this warranty is limited to repairing or replacing any product returned to our factory, freight prepaid, which proves upon inspection to have been defective.

Damage or failure of any product due to misuse, improper installation, electrolysis, corrosion, faulty maintenance, accident, overload, abuse, alteration or used with special attachments other than recommended by CNI Manufacturing in writing, is not covered by this guarantee. CNI reserves the right to decline responsibility when repairs have been made or attempted by others.

RP12-PUSH: Drain valve assembly is certified not to exceed 0.17 CFH at 2 inches H20.

Figure A-20
Husky 5885 Pressure/Vacuum Vent Valve

Husky	MODEL #5885 Recommended Installation, Maintenance and Inspection Instructions **EVR Pressure Vacuum Vent**	5885

WARNING Designed for use at motor fuel dispensing facilities only.

INSTALLATION INSTRUCTIONS

NOTE: Always adhere to installation / usage instructions and warnings. Improper use may result in injury, damage or hazardous spill.

1. Remove the vent from the carton and visually inspect for any shipping damage.
2. Apply fuel resistant pipe sealant to the threads on the 2" vent stack.
3. Screw the Pressure Vacuum (P/V) vent onto the vent stack and tighten to a range of 20 to 50 ft-lbs with a suitable wrench.
4. DO NOT OVERTIGHTEN

TESTING / MAINTENANCE / INSPECTION

Testing Criteria Per TP201.1E and Exhibit 3 of applicable Phase 1 E.O.

Leak rate: Pressure = .05 CFH @ 2" wc, Vacuum = .21 CFH @ -4" wc.
Cracking Pressure = 2 1/2" to 6" wc, Vacuum = -6" to -10" wc.
.

Annually Inspect the P/V vent valve for foreign objects:

1. Remove the screws that hold on the top cover. Do not remove the screens.
2. Remove any debris from inside the lower cover.
3. Check the drain holes in the lower cover.
4. Reinstall the top cover.
5. Tighten the screws firmly.

- All drive aways, maintenance and inspection activities must be logged using the serial number of the individual product.
- Apply city, state, or federal testing regulations as appropriate.

ANY TEST / INSPECTION FAILURE REQUIRES IMMEDIATE EQUIPMENT REPLACEMENT OR REMOVAL FROM SERVICE.

MADE IN THE USA

Husky Corporation • 2325 Husky Way • Pacific, MO 63069 • Phone: (800) 325-3558 • Fax: (636) 825-7300 • www.husky.com
Page 1 009192-01 10/07

ALWAYS ADHERE TO INSTALLATION / USAGE INSTRUCTIONS AND WARNINGS.
Improper use may result in injury, damage, or hazardous spill.

GENERAL WARNINGS / INSTRUCTIONS

- Use of equipment is at individuals' own risk.
- Always abide and adhere to city, state, and federal regulations regarding use and installation of dispensing equipment.
- Always follow the dispenser manufacturer's instructions.
- Always turn off all power to dispenser during maintenance and inspection activities.
- Always close the shear valves during maintenance and inspection activities.
- Always relieve pressure from system prior to performing maintenance activities.
- Always check continuity after installation using a megohmeter (Refer to PEI RP 400 for details).
- Always replace or remove from service damaged or leaking dispensing equipment immediately.
- Always report leaks / spills / accidents to appropriate authorities.
- Always wear appropriate safety equipment during maintenance activities.
- Always have appropriate fire extinguishing equipment within 5 feet of dispensers.
- Always use pipe sealant approved for gasoline service.
- Always place containers on the ground before filling.
- Always discharge static electricity before using or servicing equipment by touching a metal part of the dispenser before and after fueling vehicle.
- Never smoke within 20 feet of dispensers.
- Never keep in service past recommended life.
- Never leave the nozzle unattended while dispensing fuel.
- Never use sparking or flaming devices within 20 feet of dispensers.
- Never use power tools near dispensers or to aid in the installation process.
- Never use cell phone within 20 feet of dispensers.
- Never reenter car when fueling vehicle.
- Never allow gasoline to touch eyes or skin.
- Never use at flow rates in excess of regulatory guidelines.
- Never use at flow rates less than 5 gallons per minute.
- Never dispense flammable material into unapproved containers.
- Never dispense fuel without a valid driver's license.

CAUTION: DO NOT ALTER OR COVER THE P/V VENT

WARRANTY

VAPOR PRODUCTS – Husky Corporation will, at its option, repair, replace, or credit the purchase price of any Husky manufactured product which proves upon examination by Husky, to be defective in material and/or workmanship for a period of one (1) year of installation or fifteen (15) months from the manufacture date of shipment by Husky, whichever occurs first. The warranty period on repaired or replacement vapor recovery products is only for the remainder of the warranty period of the defective product.

CONVENTIONAL PRODUCTS – Husky Corporation will, at its option, repair, replace, or credit the purchase price of any Husky manufactured product which proves upon examination by Husky, to be defective in material and/or workmanship for a period of one (1) year from the manufacture date of shipment by Husky.

Buyer must return the products to Husky, transportation charges prepaid. This Warranty excludes the replaceable bellows, bellows spring assembly, spout assembly and scuff guard, unless (i) damage is obvious when the product is removed from shipping carton and (ii) the defective product is returned to Husky prior to use. This warranty does not apply to equipment or parts which have been installed improperly, damaged by misuse, improper operation or maintenance, or which are altered or repaired in any way.

The warranty provisions contained herein apply only to original purchasers who use the equipment for commercial or industrial purposes. There are no other warranties of merchantability, fitness for a particular purpose, or otherwise, and any other such warranties are hereby specifically disclaimed.

Husky assumes no liability for labor charges or other costs incurred by Buyer incidental to the service, adjustment, repair, return, removal or replacement of products. Husky assumes no liability for any incidental, consequential, or other damages under any warranty, express or implied, and all such liability is hereby expressly excluded.

Husky reserves the right to change or improve the design of any Husky fuel dispensing equipment without assuming any obligations to modify any fuel dispensing equipment previously manufactured.

TROUBLESHOOTING GUIDE

Pressure Decay Test Failure...	1. Test vent to CARB TP201.1E. 2. Replace vent.

For stations with ISD monitoring

Vapor leak...	1. Verify other equipment is not the cause. 2. Test vent to CARB TP201.1E 3. Replace vent.
Exceeds allowable system cracking pressure...	1. Replace vent

GENERAL TECHNICAL DATA

Fuel Type	Test and warranty for gasoline and diesel fuel
Body	Sand cast aluminum
Screens	Stainless Steel 40 mesh
Seal	Nitrile Foam
Covers	Aluminum
Weight	1.2 lbs
Threads	2" NPT
Case Quantity	20
Listings	CARB UL
Patents	5,957,157

ACCESSORIES

Part #5041
3" to 2" Threaded Adaptor

Installation Procedure:
1. Visually inspect the o-ring and threads for chips, dirt & debris.
2. Apply fuel resistant pipe sealant to the 3" NPT threads of the vent pipe.
3. Screw the P/V vent adaptor onto the vent stack by hand.
4. Apply fuel resistant pipe sealant to the 2" NPT threads of the P/V vent adaptor.
5. Screw the P/V vent onto the adaptor and tighten to a range of 20 to 50 ft-lbs. with a suitable wrench. Do not overtighten.

Part #5426
Test Adaptor

NOTE: This adaptor is designed to fit on the inlet of the P/V Vent to allow for field and lab tests.

Installation Procedure:
1. Screw P/V Vent adaptor into the P/V Vent valve until hand tight. Make sure the seal is compressed.
2. Place the P/V Vent valve and adaptor on a flat surface.
3. Attach a 3/16" hose (Tygon fuel tubing) from test apparatus to hose barb on the side of the adaptor.
4. After testing, remove hose from barb and remove adaptor from vent.

Figure A-21

FFS Model PV-Zero Pressure/Vacuum Vent Valve

Franklin Fueling Systems

PV-ZERO™
Liquid-Filled Pressure/Vacuum Vent Valve

FFS P/N 407215901

Installation, Testing and Maintenance Manual

Franklin Fueling Systems • 3760 Marsh Rd. • Madison, WI 53718 USA
Tel: +1 608 838 8786 • 800 225 9787 • Fax: +1 608 838 6433 • www.franklinfueling.com

Warning This symbol identifies a warning. A warning sign will appear in the text of this document when a potentially hazardous situation may arise if the instructions that follow are not adhered to closely. A potentially hazardous situation may involve the possibility of severe bodily harm or even death.

Caution This is a caution symbol. A caution sign will appear in the text of this document when a potentially hazardous environmental situation may arise if the instructions that follow are not adhered to closely. A potentially hazardous environmental situation may involve the leakage of fuel from equipment that could severely harm the environment.

Danger This symbol identifies an electrical danger. An electrical danger sign will appear in the text of this document when a potentially hazardous situation involving large amounts of electricity may arise if the instructions that follow are not adhered to closely. A potentially hazardous situation may involve the possibility of electrocution, severe bodily harm, or even death.

Warning **Follow all federal, state and local laws governing the installation of this product and its associated systems. When no other regulations apply, follow NFPA codes 30, 30A and 70 from the National Fire Protection Association. Failure to follow these codes could result in severe injury, death, serious property damage and/or environmental contamination.**

Warning **Always secure the work area from moving vehicles. To help eliminate unsafe conditions, secure the area by using a service truck to block access to the work environment, or by using any other reasonable means available to ensure the safety of service personnel.**

Warning **The PV-ZERO is used with tanks containing gasoline or other flammable substances, you may create an explosion hazard if you do not follow the requirements in this manual carefully.**

15627 Arrow Highway, Irwindale, California 91706
Phone (626) 962-6646; Out of state calls (800) 4CNI-MFG; Fax (626) 962-4854
Website: www.cni-mfg.com Email: info@cni-mfg.com

Description of the FFS PV-ZERO Liquid Filled P/V Vent Valve

The PV-ZERO operates using a similar concept to a common P-Trap used in plumbing drain applications to create a liquid air seal. The liquid seals the UST ullage vapors from the atmosphere while still maintaining the proper differential pressure set-points. After the differential pressure has been exceeded, air or vapor bubbles through the liquid media until the pressure returns to the operational pressure settings. Figures 1-3 illustrate the operation of the PV-ZERO.

The PV-ZERO has no moving parts and the only maintenance required is periodic inspection of the liquid.

Because the PV-ZERO does not use seals or gaskets to seal off the UST ullage from atmosphere, the unit will not allow vapor or air to pass through at pressure less than the cracking set-point. As long as the valve is filled with 1.6 liters (54 ozs) of PV-ZERO fluid, the stainless steel valve housing is not damaged, and the pipe fittings are correctly installed, the unit should be leak free.

The liquid used for the PV-ZERO unit is silicone-based and has an very low vapor pressure and low toxicity.

The PV-ZERO can be mounted either at the top of the vent rack or in-line (mid-mount at working level). To avoid the risk of climbing a ladder and to maximize the simplicity of inspection and service, the preferred installation of the PV-ZERO is to be mounted in-line. It can be mounted on a single riser pipe or many riser pipes manifolded to a single line. The PV-ZERO is designed to mount on 3" riser piping, but can also be installed on 2" riser piping.

See drawings on pages 9-11 for mounting options.

*** Refer to CARB EVR documents regarding equipment rules for manifold systems.***

A support frame should be used for mounting all vent riser piping and must be used to stabilize the piping above the PV-ZERO if it is to be mounted in-line.

If the PV-ZERO is to be top mounted, the support frame must stabilize the piping below the unit (and the unit itself). Check local agencies for support frame requirements and consult a licensed structural engineer if in doubt of the structural integrity of the vent rack support system.

Note: Do not mount the PV-ZERO unit on a free standing vent piping system without a support frame!

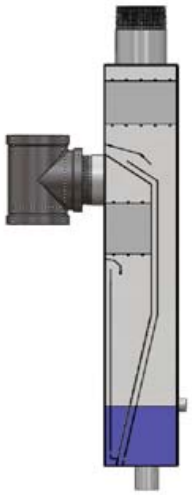

Figure 1: No Differential

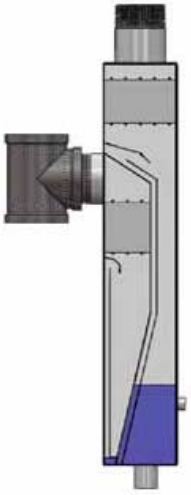

Figure 2: Positive Cracking

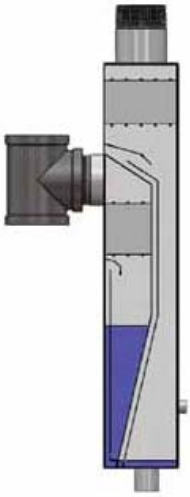

Figure 3: Negative Cracking

15627 Arrow Highway, Irwindale, California 91706
Phone (626) 962-6646; Out of state calls (800) 4CNI-MFG; Fax (626) 962-4854
Website: www.cni-mfg.com Email: info@cni-mfg.com

Installation

Note: Use a thread sealant that is approved for gasoline and gasoline-ethanol blends such as Gasoila Soft Set or Jomar Heavy Weight for all threaded pipe fittings and plugs. The 3" side tee and 1" bottom drain plug are factory installed. Tighten all fittings per recognized industry installation standards.

1. Thread the bottom of the 3" side tee onto the vent riser piping. The PV-ZERO may be mounted mid-line or top mounted on a single riser or a manifolded system (see drawings, pages 9 &10). For 2" riser piping systems, use a 3x2" NPT reducing coupling with a 3" pipe nipple at least 6" long (see drawing, page 11).
2. Make sure the PV-ZERO unit is plumb within ±3º and not set at an angle. Failure to set in the vertical position may cause improper operation.
3. For mid-line mounting installations, install and secure the rest of the 3" discharge piping on the vent rack (refer to NFPA 30 for specific fuel system vent piping requirements). **Be sure to use a pipe wrench to counteract the tightening force to the valve!**
4. Fill the PV-ZERO unit through the side port with 1.6 liters (54 oz.) of PV-ZERO fluid (FFS p/n 407220001) provided with the unit. It may also be filled through the discharge outlet fitting (top). **Do not pour into the 3" side tee fitting!**

Note: To fill the fluid in the PV-ZERO, the UST (Underground Storage Tank) must be open to the atmosphere OR the inflatable test plug needs to be installed to reach the correct level. If the tank is under pressure or vacuum, the correct fill level cannot be obtained.

5. Install the side plug.
6. Perform the **Field Testing Procedure**.
7. Install the 3" pipe plug on top of the tee.
8. Attach the 3" upward-venting rain cap provided. Attach to the top of the vent pipe (mid-mount installation) or directly to the top of the PV-ZERO (top mount) **Keep the rain cap installed to minimize water intrusion, and to ensure proper operation.**

The PV-ZERO may be painted, however, do not paint over or cover the nameplate placards decals.

Field Testing

Note: Compliance testing of the PV-ZERO, if required by the local air quality district, shall be conducted in accordance with California Air Resources Board (CARB) test procedure TP-201.1E and Exhibit 2 of the Executive Order. This test shall be conducted using the PV-ZERO test cap assembly (FFS p/n 407225901) with the valve in its installed condition. The PV-ZERO can be tested without removing the unit from the vent rack.

There are (3) ports on the PV-ZERO test cap assembly (see page 8):

- 1 – Schrader valve connection for the inflatable plug
- 1 – 1/4" hose barb (for pressure/vacuum supply)
- 1 – 1/8" hose barb (for manometer)

1. Remove 3" pipe plug from top of tee (if necessary).
2. Install the test cap assembly through the top of the 3" tee, allowing the inflatable plug to extend into the vent riser pipe - tighten fully.
3. Inflate the inflatable plug to 35 PSI.
4. Test per CARB TP-201.1E
5. Deflate the inflatable plug.
6. Remove test cap assembly from 3" tee.

15627 Arrow Highway, Irwindale, California 91706
Phone (626) 962-6646; Out of state calls (800) 4CNI-MFG; Fax (626) 962-4854
Website: www.cni-mfg.com Email: info@cni-mfg.com

Recommended Maintenance Intervals

- **Every year**: Visually inspect the housing, pipe, fittings, and rain cap for obvious signs of damage, missing parts, or fluid leaks.
- **Every year**: Visually inspect the rain cap, from ground level, for signs of bird nests or insect activity.
- **Every year**: Drain and inspect the fill fluid per the ***Fluid Inspection Procedure***.

Fluid Handling

The PV-ZERO is filled with a silicone based fluid, p/n 407220001 (contact FFS for MSDS sheet). The PV-ZERO fill fluid is resistant to UV exposure, does not support bioactivity and is resistant to oxidation.

Since the PV-ZERO is exposed to tank ullage vapors, used PV-ZERO fill fluid may contain trace amounts of ethanol and gasoline. The maintenance technician servicing the PV-ZERO should wear appropriate eye protection and nitrile gloves when inspecting or servicing the fill fluid. Check with local and state regulations regarding handling, transportation, recycling and disposal of silicone based fluids.

Fluid Inspection Procedure

1. Remove the 3" NPT plug from the top of the side tee.
2. Remove the 3/8" NPT side plug.
3. Remove the 1" NPT bottom plug and drain the fluid into a clean, transparent container.
4. Visually inspect the fill fluid for debris or water contamination. Since the specific gravity of the fluid is slightly less than water, any water in the fluid will settle to the bottom. The fluid can be reused indefinitely as long as it is free of sediment and water.

Note: Clean fluid can be refilled into the valve and topped off with new fluid, or it can be completely replaced with new fluid.

5. Reinstall the 1" NPT bottom plug.
6. Refill the PV-ZERO valve with fluid through the side-port until it spills out of the port. This is the correct fill level of 1.6 liters (54 oz.).
7. Reinstall the 3/8" NPT side plug.
8. Perform the ***Field Testing Procedure***
9. Reinstall the 3" NPT plug in the top of the side tee.

Only use the approved PV-ZERO fluid (P/N 407220001). Substitution of other fluids voids the warranty and can cause vapor leaks!

PV-ZERO Specifications

Height:	33.5"
Width:	5.0"
Length:	12.3"
Dry weight:	20#
Inlet piping connection	3" NPT
Discharge piping connection	3" NPT
Fill port	3/8" NPT
Drain port	1" NPT
Construction material	304 stainless steel
Fuel Compatibility	Gas & E85
Pressure leak rate	<< 0.05CFH at +2.0 W.C.
Vacuum leak rate	<< 0.21 CFH at -4.0 W.C.
Pressure drop at 60 cfm flow rate with tank positive pressure	14" W.C.
Pressure drop at 90 cfm flow rate with tank positive pressure	28" W.C.
Minimum operating temperature	-40°F (-40°C)
Maximum operating temperature	130°F (54°C)
Maximum test pressure	5 PSI
Maximum mounting angle deviation from vertical	3°

Drawing List:

Page	Drawing Description
6	PV-ZERO Operating Assembly
7	PV-ZERO Overall Dimensions
8	Test Cap Description
9	3" Manifolded Mid Mount
10	3" Mounting Assembly
11	2" Mounting Assembly

The drawings are on the following pages.

15627 Arrow Highway, Irwindale, California 91706
Phone (626) 962-6646; Out of state calls (800) 4CNI-MFG; Fax (626) 962-4854
Website: www.cni-mfg.com Email: info@cni-mfg.com

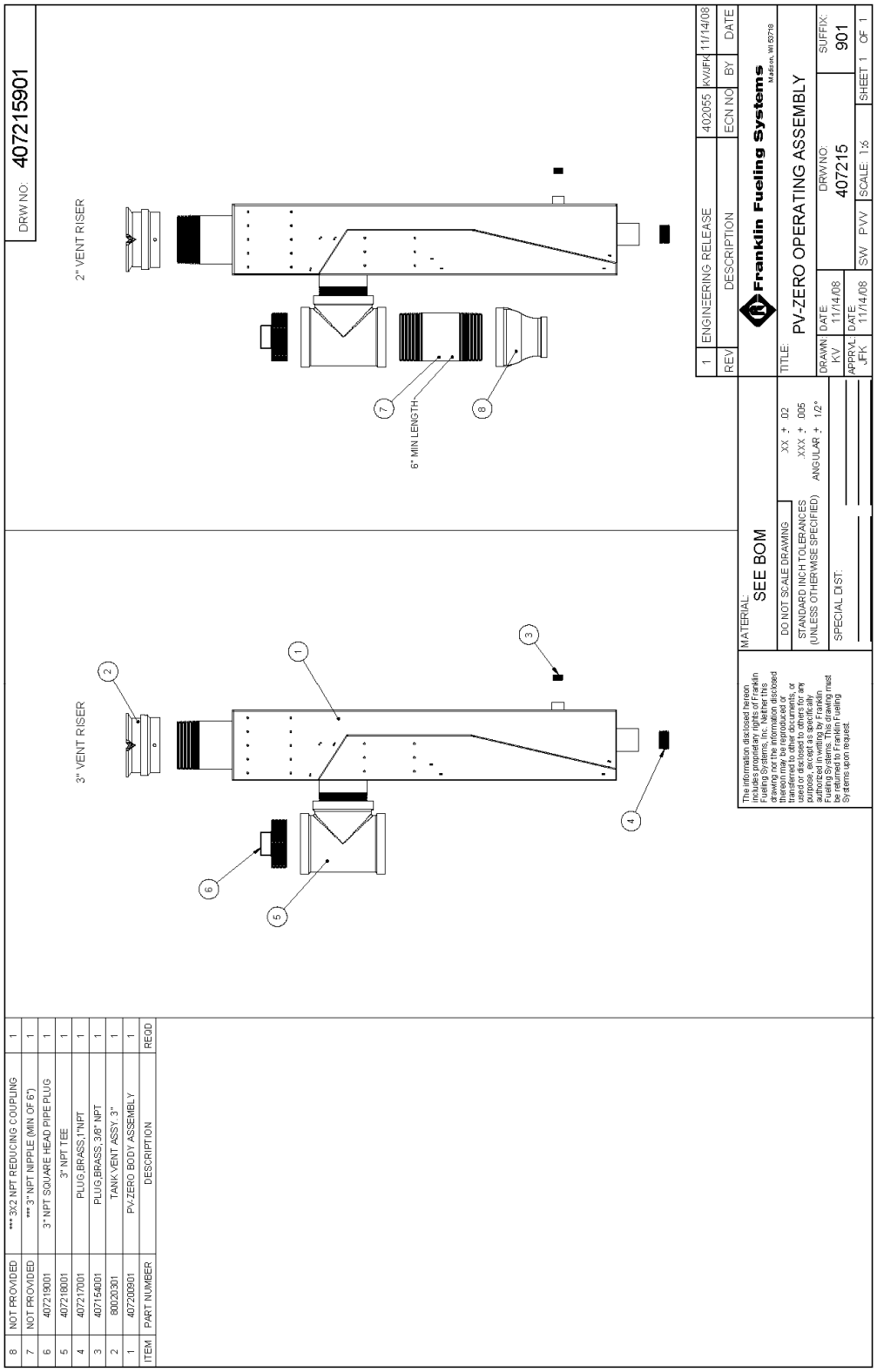
DRW NO: 407215901
2" VENT RISER
6" MIN LENGTH
3" VENT RISER
1 ENGINEERING RELEASE 402055 KV/JFK 11/14/08
REV DESCRIPTION ECN NO BY DATE
Franklin Fueling Systems
Madison, WI 53718
TITLE: PV-ZERO OPERATING ASSEMBLY
DRWN: KV DATE: 11/14/08
APPRVL: JFK DATE: 11/14/08
DRW NO: 407215
SUFFIX: 901
SW PVV SCALE 1:6 SHEET 1 OF 1
MATERIAL: SEE BOM
DO NOT SCALE DRAWING
STANDARD INCH TOLERANCES (UNLESS OTHERWISE SPECIFIED)
XX ± .02
XXX ± .005
ANGULAR ± 1/2°
SPECIAL DIST:
The information disclosed herein includes proprietary rights of Franklin Fueling Systems, Inc. Neither this drawing nor the information disclosed thereon may be reproduced or transferred to other documents, or used or disclosed to others for any purpose, except as specifically authorized in writing by Franklin Fueling Systems. This drawing must be returned to Franklin Fueling Systems upon request.
8 NOT PROVIDED *** 3X2 NPT REDUCING COUPLING 1
7 NOT PROVIDED *** 3" NPT NIPPLE (MIN OF 6") 1
6 407219001 3" NPT SQUARE HEAD PIPE PLUG 1
5 407218001 3" NPT TEE 1
4 407217001 PLUG,BRASS,1"NPT 1
3 407154001 PLUG,BRASS,3/8" NPT 1
2 80020301 TANK VENT ASSY, 3" 1
1 407200901 PV-ZERO BODY ASSEMBLY 1
ITEM PART NUMBER DESCRIPTION REQD

6

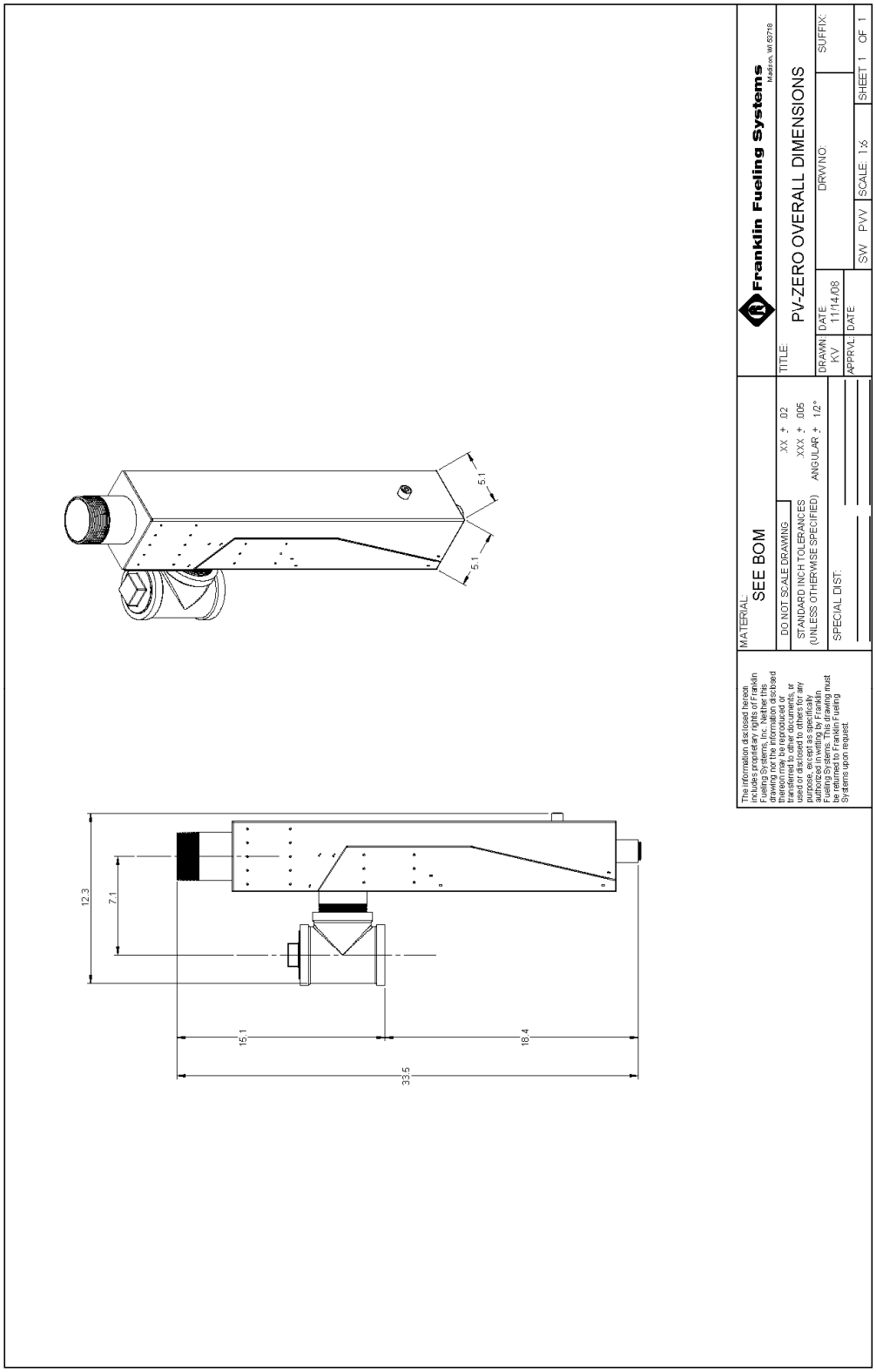
5.1
5.1
12.3
7.1
15.1
18.4
33.5
The information disclosed herein is valuable property of Franklin Fueling Systems, Inc. Neither this drawing nor the information disclosed therein may be reproduced or transferred to other documents, or used or disclosed to others for any purpose, except as specifically authorized in writing by Franklin Fueling Systems. This drawing must be returned to Franklin Fueling Systems upon request.
MATERIAL:
SEE BOM
DO NOT SCALE DRAWING
STANDARD INCH TOLERANCES
(UNLESS OTHERWISE SPECIFIED)
.XX ± .02
.XXX ± .005
ANGULAR ± 1/2°
SPECIAL DIST.
Franklin Fueling Systems
Madison, WI 53719
TITLE:
PV-ZERO OVERALL DIMENSIONS
DRAWN
KV
DATE
11/14/08
APPRVL
DATE
DRW NO:
SUFFIX:
SW
PVV
SCALE 1:6
SHEET 1 OF 1

7

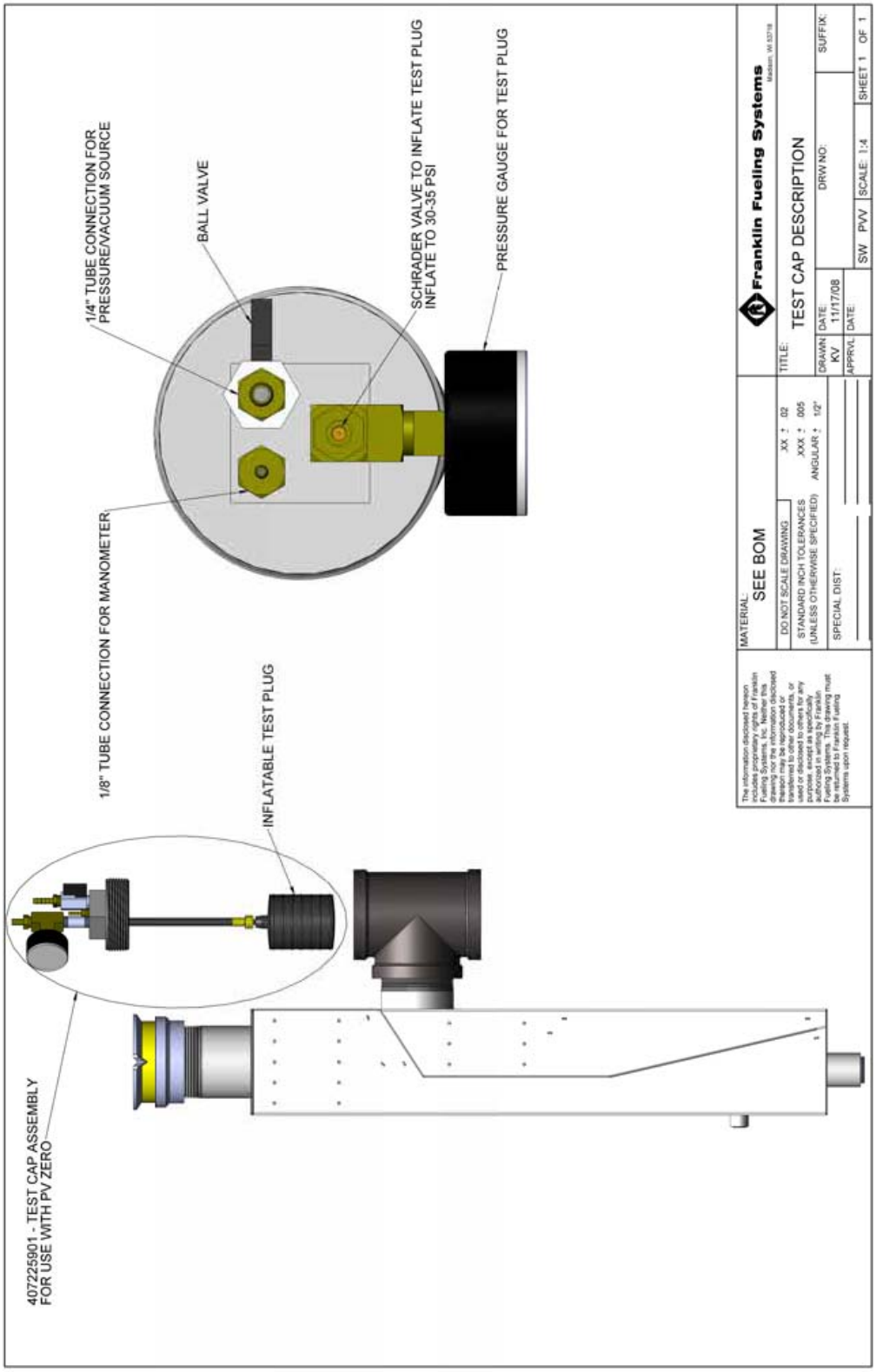
1/4" TUBE CONNECTION FOR PRESSURE/VACUUM SOURCE
BALL VALVE
SCHRADER VALVE TO INFLATE TEST PLUG INFLATE TO 30-35 PSI
PRESSURE GAUGE FOR TEST PLUG
1/8" TUBE CONNECTION FOR MANOMETER
INFLATABLE TEST PLUG
407225901 - TEST CAP ASSEMBLY FOR USE WITH PV ZERO
MATERIAL:
SEE BOM
DO NOT SCALE DRAWING
STANDARD INCH TOLERANCES (UNLESS OTHERWISE SPECIFIED)
XX ± .02
XXX ± .005
ANGULAR ± 1/2°
SPECIAL DIST:
TITLE:
TEST CAP DESCRIPTION
DRAWN DATE: 11/17/08
KV
APPRVL DATE:
Franklin Fueling Systems
DRW NO:
SUFFIX:
SW P/V SCALE: 1:4
SHEET 1 OF 1

8

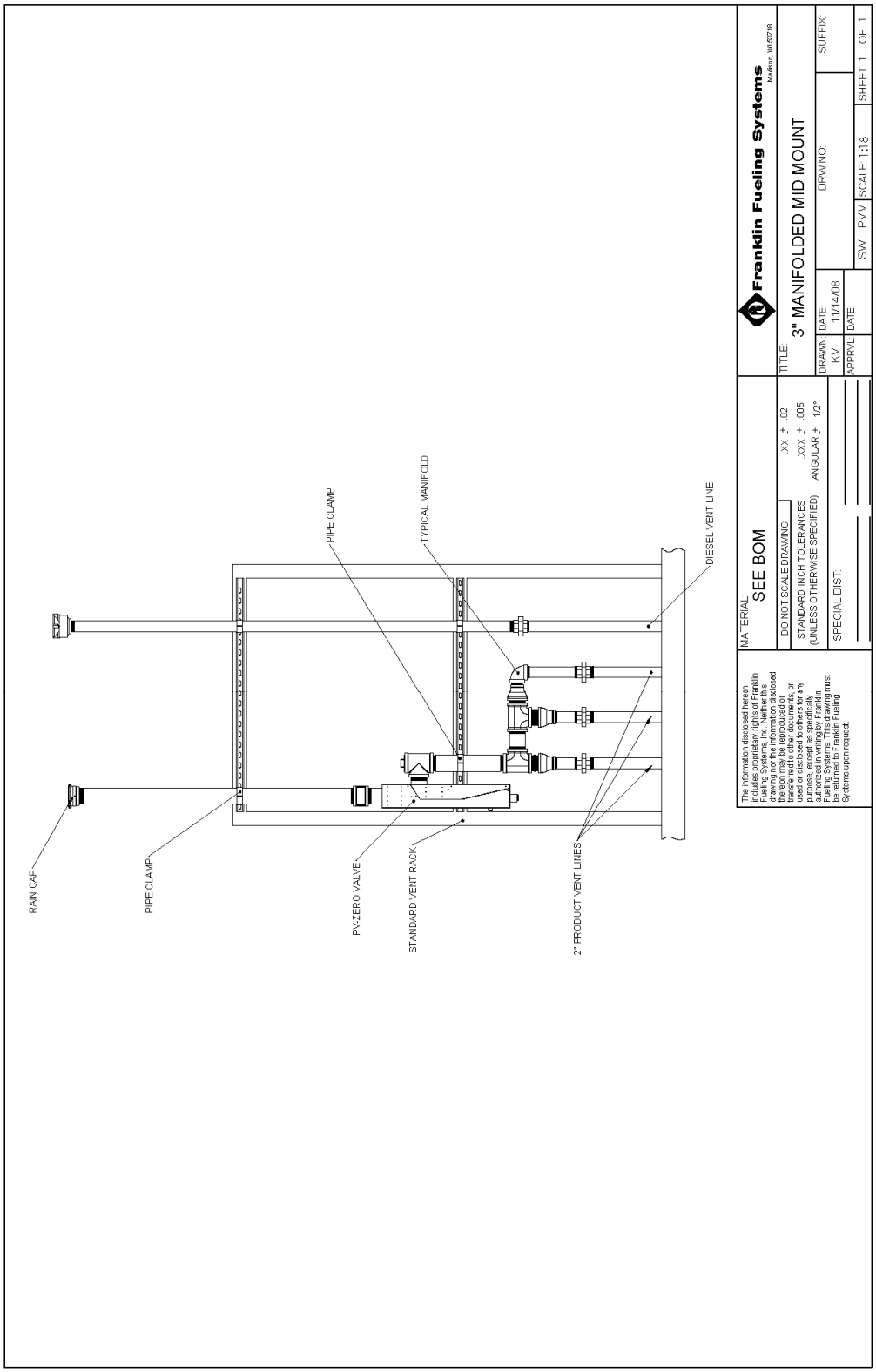
RAIN CAP
PIPE CLAMP
PV-ZERO VALVE
STANDARD VENT RACK
2" PRODUCT VENT LINES
PIPE CLAMP
TYPICAL MANIFOLD
DIESEL VENT LINE
MATERIAL
SEE BOM
DO NOT SCALE DRAWING
STANDARD INCH TOLERANCES
(UNLESS OTHERWISE SPECIFIED)
.XX ± .02
.XXX ± .005
ANGULAR ± 1/2°
SPECIAL DIST.
The information disclosed herein (including any copies) is proprietary to Franklin Fueling Systems, Inc. Neither this drawing nor the information disclosed thereon may be reproduced or transferred to other documents, or used or disclosed to others for any purpose, except as specifically authorized in writing by Franklin Fueling Systems. The drawing must be returned to Franklin Fueling Systems upon request.
Franklin Fueling Systems
Madison, WI 53718
TITLE
3" MANIFOLDED MID MOUNT
DRAWN
KV
DATE
11/14/08
APPRVL
DATE
DRWG NO
SUFFIX
SW
PVV
SCALE 1:18
SHEET 1 OF 1

9

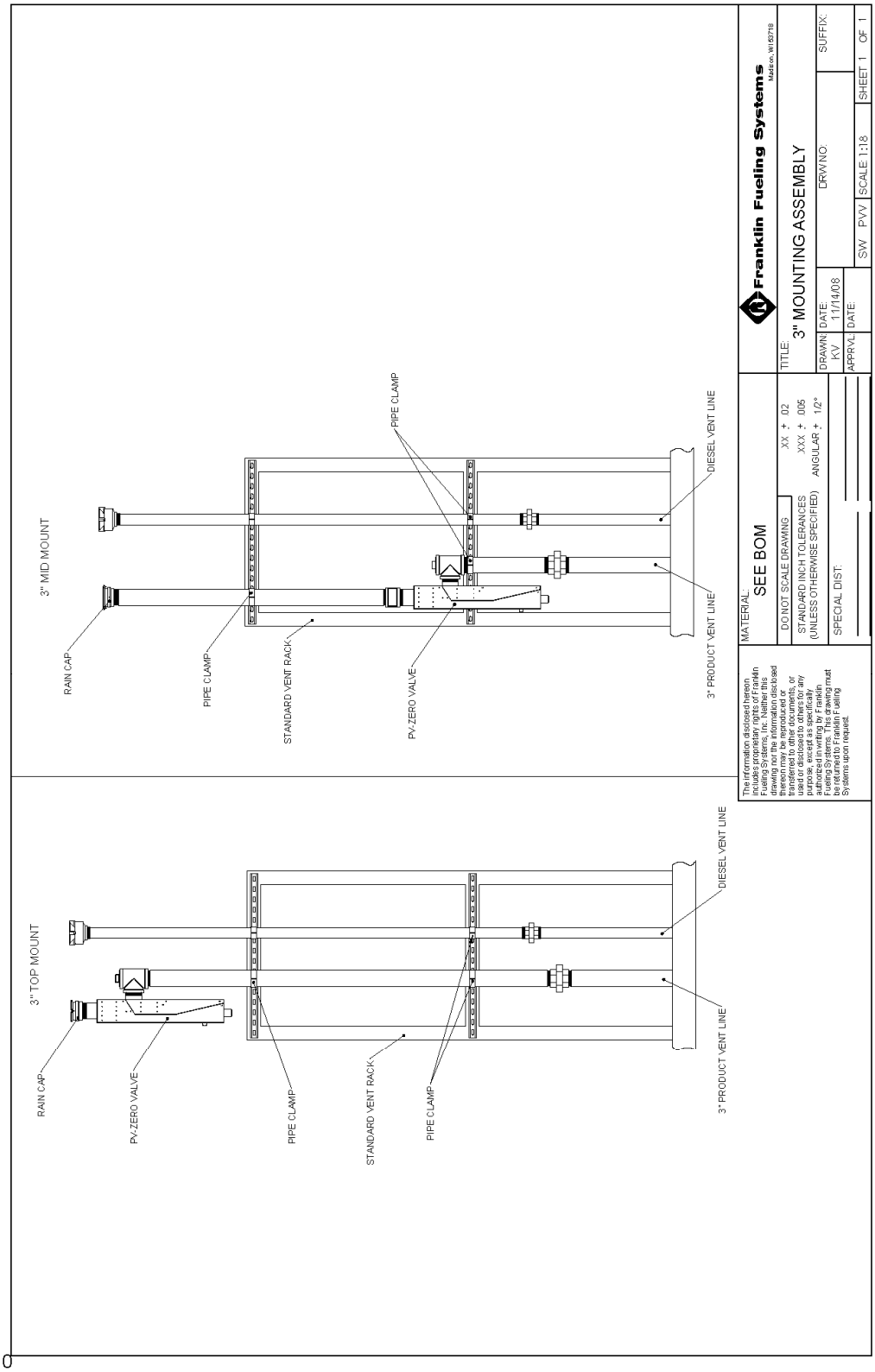
3" MID MOUNT
RAIN CAP
PIPE CLAMP
STANDARD VENT RACK
PV-ZERO VALVE
PIPE CLAMP
DIESEL VENT LINE
3" PRODUCT VENT LINE
3" TOP MOUNT
RAIN CAP
PV-ZERO VALVE
PIPE CLAMP
STANDARD VENT RACK
PIPE CLAMP
DIESEL VENT LINE
3" PRODUCT VENT LINE
MATERIAL: SEE BOM
DO NOT SCALE DRAWING
STANDARD INCH TOLERANCES (UNLESS OTHERWISE SPECIFIED)
XX ± .02
XXX ± .005
ANGULAR ± 1/2°
SPECIAL DIST:
The information disclosed hereon includes proprietary rights of Franklin Fueling Systems, Inc. Neither this drawing nor the information disclosed thereon may be reproduced or transferred to other documents, or used or disclosed to others for any purpose except specifically authorized in writing by Franklin Fueling Systems. This drawing must be returned to Franklin Fueling Systems upon request.
Franklin Fueling Systems
Madison, WI 53718
TITLE: 3" MOUNTING ASSEMBLY
DRAWN KV DATE 11/14/08
APPRVL DATE
DRWNG:
SUFFIX:
SW PVV SCALE 1:18 SHEET 1 OF 1

10

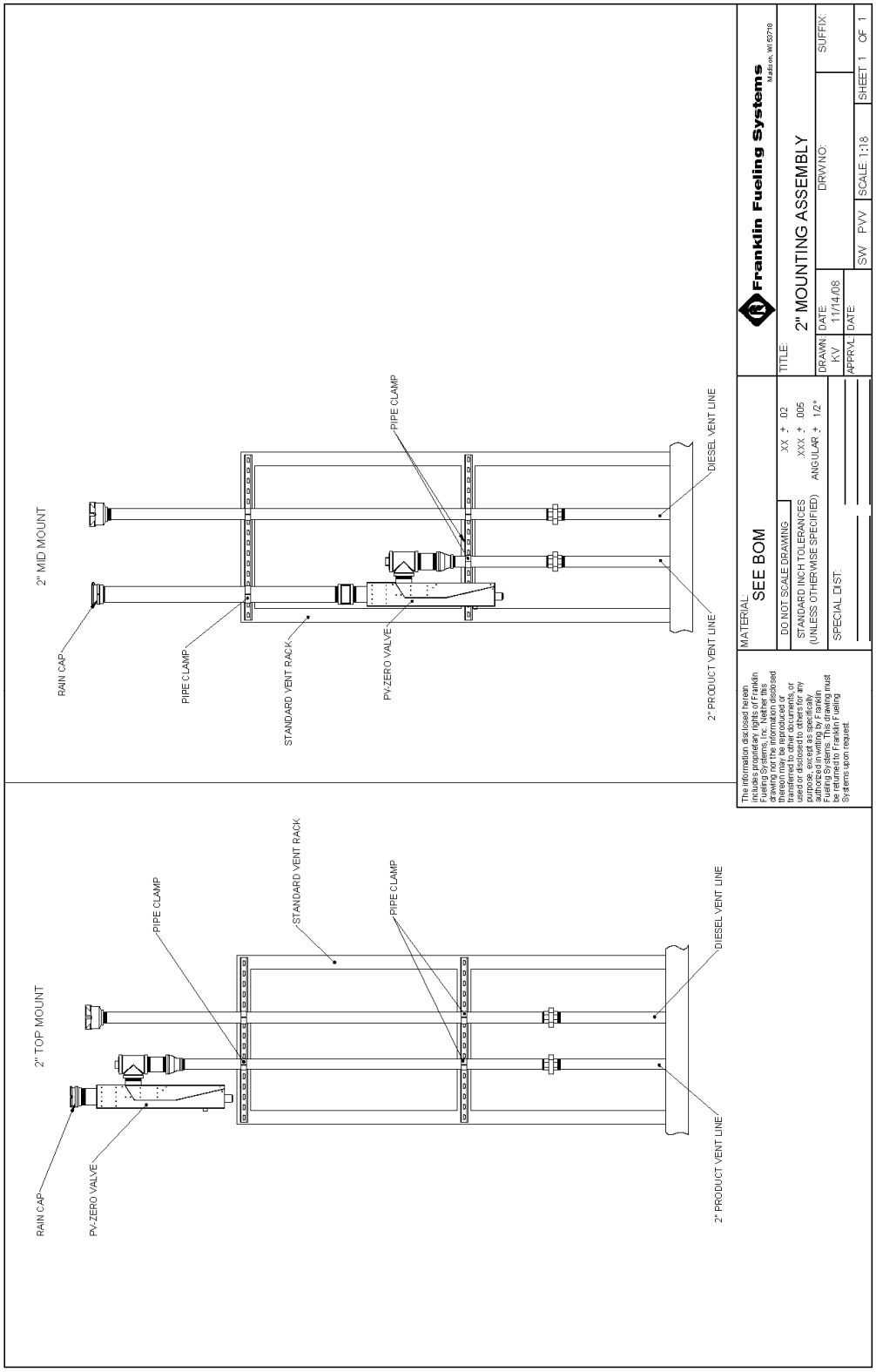
2" MID MOUNT
RAIN CAP
PIPE CLAMP
STANDARD VENT RACK
PV-ZERO VALVE
PIPE CLAMP
DIESEL VENT LINE
2" PRODUCT VENT LINE
2" TOP MOUNT
RAIN CAP
PV-ZERO VALVE
PIPE CLAMP
STANDARD VENT RACK
PIPE CLAMP
DIESEL VENT LINE
2" PRODUCT VENT LINE
MATERIAL
SEE BOM
DO NOT SCALE DRAWING
STANDARD INCH TOLERANCES
(UNLESS OTHERWISE SPECIFIED)
XX ± .02
XXX ± .005
ANGULAR ± 1/2°
SPECIAL DIST
Franklin Fueling Systems
Madison, WI 53718
TITLE:
2" MOUNTING ASSEMBLY
DRAWN: KV
DATE: 11/14/08
APPRVL:
DATE:
DRW NO:
SUFFIX:
SW
PVV
SCALE 1:18
SHEET 1 OF 1

11

Franklin Fueling Systems
www.franklinfueling.com

3760 Marsh Road • Madison, WI 53718, U.S.A.
Tel: +1 608 838 8786 • Fax: +1 608 838 6433
Tel: USA & Canada 1 800 225 9787 • Tel: México 001 800 738 7610

Franklin Fueling Systems GmbH
Rudolf-Diesel-Strasse 20 • 54516 Wittlich, GERMANY
Tel: +49-6571-105-380 • Fax: +49-6571-105-510

©2009 FFS 407232001 Rev 2

OPW 634LPC (product) and 1711LPC (vapor) Dust Caps

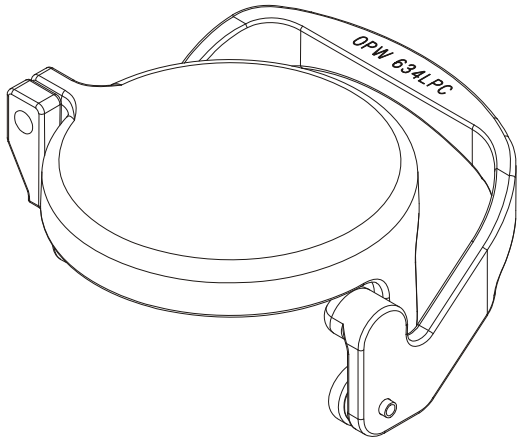

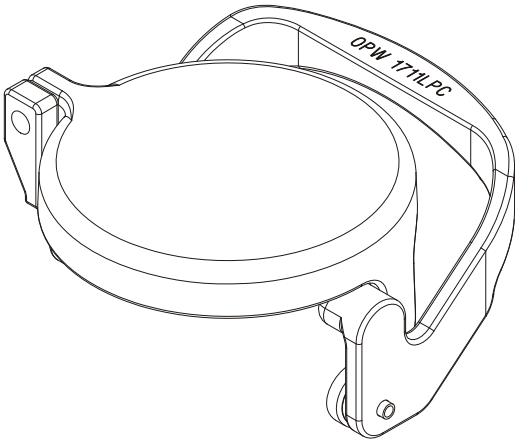

Operation and Maintenance:

Annually inspect seal for nicks, tears or deformations. If required replace with OPW P/N: H15005M.

Standard Product Warranty

OPW warrants that products sold by it are free from defects in materials and workmanship for a period of one year from the date of manufacture by OPW (ECO products two years from date of manufacture.) Proof of purchase may be required. As the exclusive remedy under this limited warranty, OPW, will at its sole discretion, repair, replace, or issue credit for future orders for any product that may prove defective within the one year date of manufacture period (repairs, replacements, or credits may be subject to prorated warranty for remainder of the original warranty period, complete proper warranty claim documentation required.) This warranty shall not apply to any product that has been altered in any way, which has been repaired by any party other than a service representative authorized by OPW, or when failure is due to misuse, or improper installation or maintenance. OPW shall have no liability whatsoever for special, incidental or consequential damages to any party, and shall have no liability for the cost of labor, freight, excavation, clean up, downtime, removal, reinstallation, loss of profit, or any other cost or charges.

For any product certified to California 2001 standards, OPW warrants that product sold by it are free from defects in material and workmanship for a period of one year from date of manufacture or one year from date of registration of installation not to exceed 15 months from date of manufacture by OPW.

THIS WARRANTY IS IN LIEU OF ALL OTHER WARRANTIES, EXPRESS OR IMPLIED, AND SPECIFICALLY THE WARRANTIES OF MERCHANTABILITY AND FITNESS FOR A PARTICULAR PURPOSE. THERE ARE NO WARRANTIES, WHICH EXTEND BEYOND THE DESCRIPTION ON THE FACE HEREOF.

OPW
A DOVER COMPANY

P.O. Box 405003 * Cincinnati, Ohio 45240-5003
1-800-422-2525 Domestically
513-870-3315 Internationally
www.opw-fc.com

CompX Security Products (CSP)
CSP1-634LPC (product), CSP2-634LPC (product), CSP3-1711LPC (vapor) and CSP4-1711LPC (vapor)
Tank Commander Dust Caps

TANK Commander

Standard Product Warranty

CompX Security Products (CSP) warrants that products sold by it are free from defects in materials and workmanship for a period of one year from the date of manufacture by CSP. Proof of purchase may be required. As the exclusive remedy under this limited warranty, CSP, will at its sole discretion, repair, replace, or issue credit for future orders for any product that may prove defective within the one year date of manufacture period (repairs, replacements, or credits may be subject to prorated warranty for remainder of original warranty period, complete proper warranty claim documentation required.) This warranty shall not apply to any product that has been altered in any way, which has been repaired by any party other than a service representative authorized by CSP, or when failure is due to misuse, or improper installation or maintenance. CSP shall have no liability whatsoever for special, incidental, or consequential damages to any party, and shall have no liability for the cost of labor, freight, downtime, removal, reinstallation, loss of profit, or any other cost or charges.

For any product certified to California 2001 standards, CSP warrants that product sold by it are free from defects in material and workmanship for a period of one year from date of manufacture or one year from the date of registration of installation not to exceed 15 months from date of manufacture by CSP.

This warranty is in lieu of all other warranties, express or implied, and specifically the warranties of merchantability and fitness for a particular purpose. There are no warranties, which extend beyond the description on the face hereof.

CompX SECURITY PRODUCTS

Copyright 2009 © CompX Security Products / 864.297.6655 / compx.com / PO Box 200, Mauldin, SC 29662
Any companies and/or products referred to herein are marks or registered trademarks of their respective companies, owners and/or mark holders.

TANK Commander

Product Instructions

Remove existing dust cap OPW 634LPC, OPW 634TT-EVR , Morrison Brothers 305C-0100ACEVR, EBW 777-201-01, EBW 777-201-02 , CNI Mfg. 64, OR EMCO Wheaton Retail A0097-005 and replace with appropriate TANK Commander dust cap; CSP1-634LPC, CSP2-1711LPC, CSP3-634LPC or CSP4-1711LPC. Make sure the handle lever is fully locked and the dust cap seal is engaged.

TuBAR TANK Commander: Insert key into stainless steel TANK Commander and rotate clockwise to retract locking bolt. Install stainless steel TANK Commander over the CSP1-634LPC product dust cap or CSP3-1711LPC vapor dust cap ensuring the lock body mounted in the sleeve fully engages the brass boss on top of the dust cap. Return the key to the 12 o'clock position and remove. The TANK Commander is now secured to the dust cap and should rotate freely.

Padlock TANK Commander: Install stainless steel TANK Commander over dust cap spindle on CSP2-634LPC or CSP4-1711LPC; install padlock shackle through the spindle hole. Secure TANK Commander by locking the padlock; product should rotate freely.

Annually inspect dust cap seal for nicks, tears or deformations and replace if necessary. Installation of TANK Commander should not violate any (height) limitations exhibited in California Air Resources Board Executive Orders VR101-VR105. If the original Vapor Recovery System installation will not allow correct installation of TANK Commander then modification to the vapor recovery system is required (i.e. fill pipe height reduction) to maintain installation requirements.

Copyright 2009 © CompX Security Products / 864.297.6655 / compx.com / PO Box 200, Mauldin, SC 29662
Any companies and/or products referred to herein are marks or registered trademarks of their respective companies, owners and/or mark holders.

CompX SECURITY PRODUCTS