Healy Model 807 Swivel Breakaway

IMPORTANT: This sheet must be left with service station manager.

HEALY STAGE II VAPOR RECOVERY MODEL 807 SWIVEL BREAKAWAY (HOSE BREAK) ASSEMBLY & INSTALLATION INSTRUCTIONS

- The Healy Swivel Breakaway is delivered loosely assembled. Handle carefully to avoid dropping and/or losing the precision parts.
- Failure to remove the Shear screw (Item 9) as described in Step 1 below could result in fracturing or shearing of the screw The Shear screw will require replacement if damaged.
- Be sure to assemble parts in the exact sequence as shown below.
- Be sure to lubricate all o–rings and quad seals where indicated. Use of ordinary motor oil is sufficient.
- Do not use thread–sealing compounds on straight threads.
- This Breakaway shall be installed between the product hose and the nozzle end (threaded onto nozzle).

ASSEMBLY INSTRUCTIONS
(refer to diagram at right)

1. Remove the Shear Screw (Item 9) and the packing materials. Separate the halves of the breakaway assembly, retaining the loose internal valve, (Item 6) and the spring (Item 11) inside the halves.
2. Install the male threaded half of the 807 into the Healy Nozzle. Lubricate the o–ring seals (Items 17 & 21 and tighten to 35 to 70 foot pounds. Be sure the vapor tube fitting slides easily into the nozzle before final tightening.
3. Select the delivery hose, lubricate the o–ring seals and straight thread. Assemble the non–swivel end of the Breakaway on the hose. Tighten to 35 to 70 foot pounds. Be sure the valve and spring (items 6 & 11) are in place before final tightening.
4. Carefully fit both halves of the Breakaway together. Utlizing the alignment pin, fully compress both halves and insert the Shear Screw (Item 9) and hand tighten. Final tighten to 20 inch pounds. Tools should not be necessary to initially start the screws.

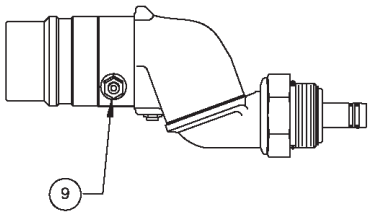

NOTE: SHEAR SCREW INSTALLS 45° FROM SPARE.

NOZZLE END

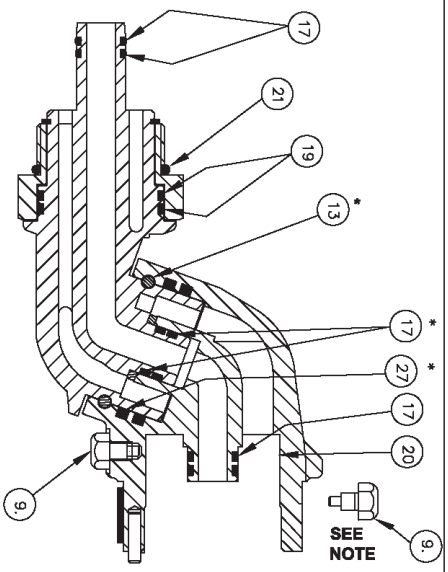

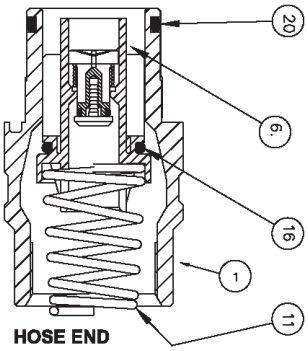

HOSE END

* NOT FIELD REPLACEABLE

ITEM NO.	QTY	DWG NO.	DESCRIPTION	P/N
* 27	2	4125–514GJ	QUAD RING, MINNISOTA RUBBER	80727
21	1	1–025	O–RING, PRECISION #5747	HB–2
20	1	1–122	O–RING, PRECISION #9727	709
19	2	1–024	O–RING, PRECISION #5747	MPD–5
18	1	1–117	O–RING, PRECISION #9727	708
* 17	6	1–012	O–RING, PRECISION #5747	75414
16	1	1–009	O–RING, PRECISION #9727	753
11	1	A8701–752	SPRING, CONICAL	752
9	2	BB701–787	SCREW, SHEAR	787–1
6	1	A8701–748	VALVE, DISPENSING END	748
4	1	BB701–810	BUSHING	810
2	1	CB701–805	SWIVEL, FEMALE, (MACHINED)	805
1	1	CB701–809	BODY, DISPENSER END	809

LIST OF MATERIAL

HEALY SYSTEMS, INC.
18 Hampshire Drive * Hudson, New Hampshire 03051
(603) 882–2472 Telephone* (603) 882–5189 FAX

healy
... the SMART Stage II solution

A8701-807-INST-M
11/15/06 REV. M

DRIVE-OFF BREAKAWAY RECONNECTION PROCEDURE

Use this procedure to either reconnect or disconnect (reverse order) the Healy 807 Swivel Breakaway as part of Section 1.4 Procedure for Reconnecting Breakaway and Testing Fueling Point after Drive-Off in the Healy Systems Scheduled Maintenance.

TOOLS NEEDED:

- Healy Breakaway Reconnection Clamp, Part No. 795
- 8mm Hex Head Socket
- Torque wrench
- Safety glasses

1. Inspect each half of the separated breakaway for obvious damage to the outer-shell, plastic insert or o-rings; including cracks, chips or tears that may effect reconnecting the two halves.

2. Check the shear pin bushing hole (see Figure 3) located in the half of the breakaway attached to the hose for any part of the pin left behind at separation. A gentle tap on the opposite side of the breakaway should eject the pin.

3. After completing inspection, lightly lubricate the main o-ring on the half of the breakaway that's attached to the hose and the two small o-rings inside the half of the breakaway attached to the nozzle. Any weight motor oil is acceptable.

4. Remove the black handle cover from the nozzle (See Figure 1).

5. Slide the top clamp of the Breakaway Reconnection Clamp above the two flat surfaces on the nozzle (See Figure 2).

6. Slide the half of the breakaway that's attached to the hose onto the bottom clamp of the Breakaway Reconnection Clamp and begin squeezing the grip to slowly bring the two halves together. Check the main o-ring for position as the top and bottom of the breakaway join together (See Figure 2).

7. Align the dowel pin in the top half of the breakaway with the dowel pin guide located in the bottom half of the breakaway (See Figure 3). When dowel pin and guide are aligned, continue squeezing tool grip until the breakaway halves come together (See Figure 4).

   Caution: Reconnection can cause a small amount of gasoline to leak out of the breakaway. A towel wrapped loosely around the breakaway can help to minimize fuel spills.

7. Remove the shear pin (#787-1) located in the spare shear pin location of the breakaway and install in place of the original.

8. Torque the shear pin to 20 inch-pounds (~ 1.5 ft-lbs). **DO NOT OVER-TIGHTEN**.

9. If available, install a shear pin (#787-1) in the spare shear pin location.

10. Remove the Breakaway Reconnection Clamp.

11. Proceed with the tests outlined in Section 1.4 of the Healy Systems Scheduled Maintenance.

Figure 1

Figure 2

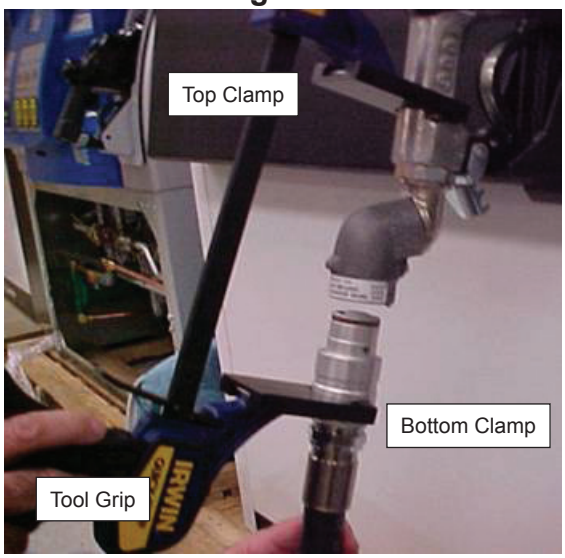

Figure 3

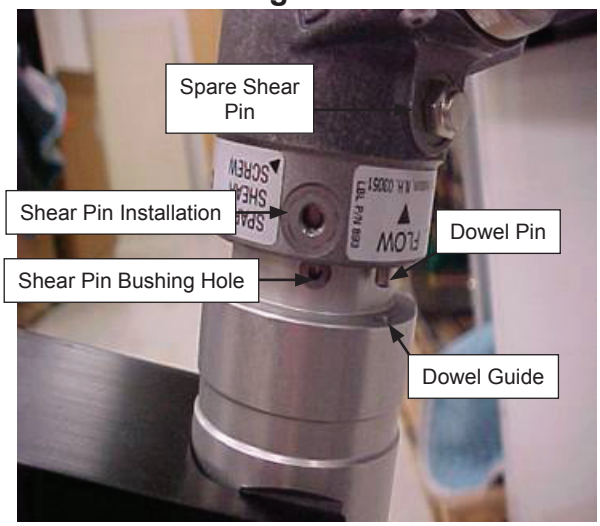

Figure 4