California Environmental Protection Agency

Air Resources Board

**ARB Approved**

# Installation, Operation and Maintenance Manual

for

Executive Orders

VR-201-K
(Healy Phase II EVR System)

and

VR-202-K
(Healy Phase II EVR System Including
In-Station Diagnostic (ISD) Systems)

# NOTICE:

The **ARB Approved Installation, Operation and Maintenance Manual for VR-201-K and VR-202-K** describes the tools, method and skill levels required to install both the **Healy Phase II EVR System Not Including ISD, ARB Executive Order VR-201-K** and the **Healy Phase II EVR System Including ISD Systems, ARB Executive Order VR-202-K**.

Unless specified otherwise, only skilled technicians that are trained, certified and licensed by Franklin Fueling Systems (i.e. Healy or INCON Certified Technicians) are able to perform installation, maintenance or repairs of components manufactured by Franklin Fueling Systems or warranty will be void. However, GDF Owner / Operator can remove and install hanging hardware (nozzle, curb hose, breakaway, flow limiter and whip hose).

It is the responsibility of each Healy Certified Technician to be familiar with the current requirements of state, federal, local codes and air district rules and regulations for installation and repair of gasoline dispensing equipment.

It is also the responsibility of the Healy Certified Technician to be aware of all the necessary safety precautions and site safety requirements to assure a safe and trouble free installation.

Unless specified otherwise, only skilled technicians that are trained, certified and licensed by Veeder-Root are able to perform installation, maintenance or repairs of components manufactured by

Veeder-Root, or warranty will be void.

It is the responsibility of each Veeder-Root technician to be familiar with the current requirements of state, federal, local codes and air district rules and regulations for installation and repair of gasoline dispensing equipment.

It is also the responsibility of the Veeder-Root technician to be aware of all the necessary safety precautions and site safety requirements to assure a safe and trouble free installation.

It is the responsibility of each INCON Certified Technician to be familiar with the current requirements of state, federal, local codes and air district rules and regulations for installation and repair of gasoline dispensing equipment.

It is also the responsibility of the INCON Certified Technician to be aware of all the necessary safety precautions and site safety requirements to assure a safe and trouble free installation.

A copy of the Veeder-Root In-Station Diagnostic System Troubleshooting Guide can be found at http://www.veeder.com.

A Copy of the INCON VRM Troubleshooting and Diagnostics Guide can be found at http://www.franklinfueling.com.

A copy of the Healy EVR Troubleshooting Guide can be found at http://www.franklinfueling.com.

To confirm a Healy or INCON Certified Technician training status, a regulator can access a searchable database at the following web site: http://www.franklinfueling.com/CertifiedInstallers/CertifiedInstallers.asp

To confirm Veeder-Root TLS or ISD training a regulator should send an email to technicaltraining@gilbarco.com with the name (and company) of the ASC to obtain verification of the ASC TLS/ISD training status or call 800-997-7725 and press “*” to get to the Veeder-Root menu and “*” again to speak to a representative.

## Table of Contents

## Healy Installation, Operation and Maintenance Manual[1]


| Component | Manufacturer/Model | Starts on Page |
|---|---|---|
| Scheduled Maintenance | Healy Phase II EVR System | 1 |
| Nozzle | Healy Model 900 | 11 |
| Clean Air Separator Pressure Management System | Healy Model 9961 and 9961H | 21 |
| Inverted Coaxial Hoses | Healy Model 75 Series | 33 |
| Hose Adaptors | Healy Model CX6 Series | 36 |
| Reconnectable Breakaway Couplings | Healy Model 8701VV | 37 |
| | Healy Model 807 | 40 |
| Flow Limiters | Healy Model 1301 | 43 |
| | Healy Model 1302 | 44 |
| Dispensers with Healy Model VP1000 Vacuum Pump | | |
| | Gilbarco Encore 300 & 500 Series[2] | 45 |
| | Gilbarco GasBoy 9800 Series | 78 |
| | Wayne Harmony Series (Balance) | 98 |
| | Wayne Harmony Series (Assist) | 117 |
| | Wayne Ovation Series | 137 |
| | Wayne Vista Series | 161 |
| | Wayne Global Century, Select and Reliance Series | 178 |
| | Healy Universal Manual | 195 |


[1] All components listed on this page of the Table of Contents are applicable to both Executive Order VR-201-K (Healy Phase II EVR System Not Including ISD) and Executive Order VR-202-K (Healy Phase II EVR Systems with In-Station Diagnostics Systems).

[2] An additional section, Section 18 has been added which provides instruction on how to install the VP1000 vacuum pump in the dispenser cabinet to allow for the ISD flow meter to be installed above the vapor shear valve.

## In-Station Diagnostics (ISD) Systems Install, Setup, & Operation Guide and Manuals[3]

Veeder-Root ISD Install, Setup, & Operation Manual

Veeder-Root ISD Vapor Flow Meter Installation Manual

Veeder-Root ISD Pressure Sensor Installation Guide

INCON Vapor Recovery Monitoring (VRM) Installation, Operation, & Maintenance Manual

INCON Vapor Flow Meter (VFM) Installation Guide

INCON Vapor Pressure Sensor (VPS) Installation Guide

INCON Data Transfer Unit Dispenser Retrofit Manual

INCON Console DTU (Data Transfer Unit) Installation Instructions

[3] All components listed on this page of the Table of Contents are ONLY applicable to Executive Order VR-202-K (Healy Phase II EVR System with In-Station Diagnostics Systems).

# Healy Systems Scheduled Maintenance

1.0 Scheduled Maintenance Instructions for a Healy System with VP1000 Vacuum Source and 900 Series EVR Nozzle.

Initial problems are usually caused by installation irregularities that are easily detected and repaired by performing the “VP1000 Vacuum Performance Test Procedure” located in the dispenser installation manual. Periodic maintenance described here will eliminate problems and maintain peak operation of the system.

Note: Only a Healy Certified Technician can service any problems discovered while conducting the Weekly or Quarterly Inspection and Testing. Provided that there are no other local district requirements, a GDF Owner / Operator can remove and install nozzles, curb hoses, breakaways, flow limiters and whip hoses without a manufacturer certification. Additional certifications may be required in accordance with local district requirements.

1.1 Weekly Inspection and Testing

- Inspect each nozzle, hose, and breakaway for damage, loose connections, or leaks. Inspect nozzles for damaged vapor boots or spouts. Any nozzle with a vapor collection boot which is missing, or which has one half of the mini-boot faceplate or greater missing should be replaced or repaired as soon as practicable. Spouts with visible damage must be replaced.

- Inspect hoses for wear, severe kinks, cracks, and splitting. Replace if wire braid is visible.

- Test the VP1000 Vacuum Pump for normal operation using the following test procedure:

  - Normal operation will have the VP1000 Vacuum Pump running at low speed if only one side of a dispenser / pump is activated (ready to dispense fuel) and will run at full speed if both sides of the dispenser are activated (ready to dispense fuel). The VP1000 vacuum pump may continue to run for a few seconds after a nozzle is reholstered.

  NOTE: If any of the four bullets below cannot be achieved, tag out dispenser and call a Healy Certified Technician for service.

  - The VP1000 vacuum pump should come on immediately when a nozzle is lifted and the dispenser is activated and ready to dispense fuel.

  - Repeat for each nozzle on both sides of the dispenser being tested, one at a time, to verify the VP1000 vacuum pump is running after the dispenser is activated and ready to dispense fuel.

NOTE: For unihose dispensers, conduct individual tests for each product grade on each side of the dispenser to ensure that the VP1000 activates for all grades on the same side.

- Leave one nozzle activated on the first side and with the pump running, lift a nozzle on the other side of the dispenser (activated as above) and listen for a change of speed (increase) in the pump motor. Return both nozzles to the dispenser.

- Repeat the above procedures to activate both sides of the dispenser, but start with the opposite side of the dispenser. If the above procedures can be confirmed by starting with the opposite side of the dispenser, the VP1000 vacuum pump is correctly installed. After the VP1000 vacuum pump gets to second speed, it will not drop back to single speed until one nozzle is reholstered.

**Note: In parts of the country where the outside temperature drops below 35° F, the VP1000 vacuum pump motor will automatically run at a very low RPM to prevent freezing. This is normal operation.**

1.2 Quarterly Inspection and Testing

1.2.1 Perform Weekly Inspection prior to Quarterly inspection.

1.2.2 Inspect the VP1000 vacuum pump for loose or damaged vapor line connections. If copper tubing is kinked or loose remove the dispenser from service and call a Healy Certified Technician for service.

1.2.3 Check product dispensing flow rate at maximum (handheld) dispensing position. Verify flow rate is between 6.0 gpm and 10.0 gpm.

1.2.3.1 Replace dispenser filters when flow rate is below 6.5 gpm and check flow rate again. If the flow rate does not increase after filter change, remove the fueling point from service.

1.2.3.2 If flow rates exceed 10.0 gpm, install either Healy Model 1301 or 1302 Flow Limiter and check flow rate again. If flow rate still exceeds 10.0 gpm, remove the fueling point from service.

1.2.4 Check Clean Air Separator for proper operating configuration. See EO VR-201-J or VR-202-J, Exhibit 2, Figure 2B-2 or 2B-2H for guidance. Figure 2B-2 applies to vertical CAS installations. Figure 2B-2H applies to horizontal CAS installations.

1.3 Annual Inspection and Testing to Be Performed By a Healy Certified Technician.

The following procedures are recommended to be conducted in the order listed.

1.3.1 Perform weekly and quarterly inspection prior to Annual Inspection.

1.3.2 Conduct static pressure performance of the Healy Clean Air Separator (EO VR-201-J or VR-202-J, Exhibit 4).

1.3.3 Conduct pressure decay test (TP-201.3 and EO VR-201-J or VR-202-J, Exhibit 8).

1.3.4 Conduct dispenser vapor line tightness test found in the Healy dispenser manual under “testing the system” for each dispenser at GDF. Repair all leaks.

1.3.5 Conduct V/L test on all nozzles (EO VR-201-J or VR-202-J, Exhibit 5 or an ARB approved alternate test procedure). Adjust and replace as necessary.

1.4 Procedure for Reconnecting Breakaway and Testing Fueling Point after Drive-Off.

**Note: The following procedure does not require a Healy Certified Technician. If any of the tests listed requires removing the fueling point or dispenser from service, contact a Healy Certified Technician. Breakaway reconnections and/or service by the GDF owner/operator or a Healy Certified Technician shall be logged in the GDF Maintenance Log.**

1.4.1 After a Drive-Off, inspect the nozzle, hose and breakaway for damage. Spouts with visible damage must be replaced. Hoses with wire braid showing must be replaced.

1.4.2 Reconnect the breakaway assembly per the procedure in the appropriate Reconnectable Breakaway Coupling (P/N 8701VV or P/N 807) section of the *ARB Approved Installation, Operation and Maintenance Manual*. This procedure requires the use of the Healy reconnection clamp, P/N 795. Verify that the tip of the shear screw installed prior to the Drive-Off is removed from the dispenser end body (connected to the whip hose) of the breakaway.

**Note: Do not remove the hose or nozzle from the bottom section of the breakaway, as the breakaway is holding the liquid gasoline in the hose/nozzle.**

1.4.3 Authorize dispenser and inspect the hanging hardware for liquid leaks and meter creep (fueling position display is counting up without dispensing product). If no liquid leaks or meter creep are observed, proceed to section 1.4.4 of this procedure. If liquid leaks or meter creep are observed, remove the fueling point from service and conduct the following:

1.4.3.1 Use the breakaway reconnection procedure, referenced in section 1.4.2, in reverse order to disconnect the breakaway. Remove the nozzle and hose from the dispenser. (A towel can be placed into the upper portion of the nozzle holster of the dispenser to stop the dispenser beep associated with the nozzle being removed from the holster).

1.4.3.2 Install a plastic bag around the portion of the breakaway still connected to the dispenser whip hose. The plastic bag shall be large enough to enclose the breakaway and shall have a thickness of no greater than 2 mils. In California, 12” x 26” x 2 mil thick bags are available from the Air Resources Board by calling 800-952-5588.

1.4.3.3 Initialize the dispenser for fueling. **Do not dispense any fuel**.

1.4.3.4 With the dispenser initialized, observe the bagged breakaway for thirty (30) seconds.

1.4.3.5 If the bag collapses (indicating the breakaway is not maintaining vapor integrity), or liquid leaks or meter creep are observed, replace breakaway assembly per the procedure in the appropriate Reconnectable Breakaway Coupling (P/N 8701VV or P/N 907) section of ARB approved Installation, operation and Maintenance Manual, and return to section 1.4.3 of this procedure. If bag collapses or liquid leaks, or meter creep is observed after replacing breakaway assembly, remove the dispenser from service and contact a Healy Certified Technician. If the bag does not collapse (indicating the breakaway is maintaining vapor integrity) and no liquid leaks or meter creep are observed, the dispenser can remain in service.

1.4.4 Conduct the Nozzle Bag Test using the procedure from Exhibit 7 of Executive Order VR-201-J or VR-202-J. If the bag around the nozzle does not collapse, proceed to section 1.4.5 of this procedure. A nozzle where the bag is collapsing indicates a defective vapor valve. If the nozzle bag test indicates a defective vapor valve, replace nozzle assembly and return to section 1.4.3 of this procedure. If bag collapses or liquid leaks or meter creep is observed after replacing the nozzle assembly, remove the fueling point from service and conduct the following:

1.4.4.1 Use the breakaway reconnection procedure, referenced in section 1.4.2, in reverse order to disconnect the breakaway. Remove the nozzle and hose from the dispenser. (A towel can be placed into the upper portion of the nozzle holster of the dispenser to stop the dispenser beep associated with the nozzle being removed from the holster).

1.4.4.2 Install a plastic bag around the portion of the breakaway still connected to the dispenser whip hose. The plastic bag shall

be large enough to enclose the breakaway and shall have a thickness of no greater than 2 mils. In California, 12” x 26” x 2 mil thick bags are available from the Air Resources Board by calling 800-952-5588.

1.4.4.3 Initialize the dispenser for fueling. **Do not dispense any fuel.**

1.4.4.4 With the dispenser initialized, observe the bagged breakaway for thirty (30) seconds.

1.4.4.5 If the bag collapses (indicating the breakaway is not maintaining vapor integrity), or liquid leaks or meter creep are observed, remove the dispenser from service and contact a Healy Certified Technician. If the bag does not collapse (indicating the breakaway is maintaining vapor integrity) and no liquid leaks or meter creep are observed, the dispenser can remain in service.

1.4.5 The following tests shall be performed after passing sections 1.4.3 and 1.4.4 of this procedure.

1.4.5.1 Test the insertion interlock feature of the nozzle using the procedures outlined in Sections 1.1.7 and 1.1.8 in the Healy Model 900 Nozzle section of the *ARB Approved Installation, Operation and Maintenance Manual*. If the nozzle fails either of these tests, replace nozzle assembly and return to section 1.4.3 of this procedure. If the nozzle fails any of the tests after replacing the nozzle, remove the fueling point from service and contact a Healy Certified Technician.

1.4.5.2 Test the automatic shutoff feature of the nozzle using the procedures outlined in Sections 1.2.8, 1.2.9 and 1.2.10 in the Healy Model 900 Nozzle section of the *ARB Approved Installation, Operation and Maintenance Manual*. If the nozzle fails any of the tests, replace nozzle assembly and return to section 1.4.3 of this procedure. If the nozzle fails any of the tests after replacing the nozzle, remove the fueling point from service and contact a Healy Certified Technician.

For more information about testing and/or maintenance of Healy products, contact Healy Technical Services @ 800-984-6266.

# VR-201-K and VR-202-K - Weekly Inspection and Testing Checklist

Checklist results may be used to assist with filling out GDF maintenance log. | Date: _____ | Page ____ of ____

| Dispenser Number | Unihose or Fuel Grade (circle one) | Nozzle Inspection (circle one) | Hose Inspection (circle one) | Breakaway Inspection (circle one) | VP1000 Vacuum Pump Normal Operation (circle one) |
|---|---|---|---|---|---|
| | Unihose 87 89 91 Other ___ | Pass Fail | Pass Fail | Pass Fail | Yes No |
| | Unihose 87 89 91 Other ___ | Pass Fail | Pass Fail | Pass Fail | Yes No |
| | Unihose 87 89 91 Other ___ | Pass Fail | Pass Fail | Pass Fail | Yes No |
| | Unihose 87 89 91 Other ___ | Pass Fail | Pass Fail | Pass Fail | Yes No |
| | Unihose 87 89 91 Other ___ | Pass Fail | Pass Fail | Pass Fail | Yes No |
| | Unihose 87 89 91 Other ___ | Pass Fail | Pass Fail | Pass Fail | Yes No |
| | Unihose 87 89 91 Other ___ | Pass Fail | Pass Fail | Pass Fail | Yes No |
| | Unihose 87 89 91 Other ___ | Pass Fail | Pass Fail | Pass Fail | Yes No |
| | Unihose 87 89 91 Other ___ | Pass Fail | Pass Fail | Pass Fail | Yes No |
| | Unihose 87 89 91 Other ___ | Pass Fail | Pass Fail | Pass Fail | Yes No |
| | Unihose 87 89 91 Other ___ | Pass Fail | Pass Fail | Pass Fail | Yes No |
| | Unihose 87 89 91 Other ___ | Pass Fail | Pass Fail | Pass Fail | Yes No |
| | Unihose 87 89 91 Other ___ | Pass Fail | Pass Fail | Pass Fail | Yes No |
| | Unihose 87 89 91 Other ___ | Pass Fail | Pass Fail | Pass Fail | Yes No |
| | Unihose 87 89 91 Other ___ | Pass Fail | Pass Fail | Pass Fail | Yes No |
| | Unihose 87 89 91 Other ___ | Pass Fail | Pass Fail | Pass Fail | Yes No |

# VR-201-K and VR-202-K - Quarterly Inspection and Testing Checklist

Checklist results may be used to assist with filling out GDF maintenance log. Date: _____ Page ____ of ____

| Dispenser Number | Unihose or Fuel Grade (circle one) | Weekly Inspection Complete (circle one) | VP1000 Inspection (circle one) | Product Dispensing Rate (gallons per minute) | Fuel Grade Tested (circle one) | Clean Air Separator Configuration (see Figures 1 and 1H) | | |
|---|---|---|---|---|---|---|---|---|
| | Unihose 87 89 91 Other ___ | Yes No | Pass Fail | gpm | 87 89 91 Other___ | Valve | Circle One | |
| | Unihose 87 89 91 Other ___ | Yes No | Pass Fail | gpm | 87 89 91 Other___ | A | Open | Closed |
| | Unihose 87 89 91 Other ___ | Yes No | Pass Fail | gpm | 87 89 91 Other___ | B | Open | Closed |
| | Unihose 87 89 91 Other ___ | Yes No | Pass Fail | gpm | 87 89 91 Other___ | C | Open | Closed |
| | Unihose 87 89 91 Other ___ | Yes No | Pass Fail | gpm | 87 89 91 Other___ | D | Open | Closed |
| | Unihose 87 89 91 Other ___ | Yes No | Pass Fail | gpm | 87 89 91 Other___ | | | |
| | Unihose 87 89 91 Other ___ | Yes No | Pass Fail | gpm | 87 89 91 Other___ | Plug | Circle One | |
| | Unihose 87 89 91 Other ___ | Yes No | Pass Fail | gpm | 87 89 91 Other___ | E | Installed | Missing |
| | Unihose 87 89 91 Other ___ | Yes No | Pass Fail | gpm | 87 89 91 Other___ | F | Installed | Missing |
| | Unihose 87 89 91 Other ___ | Yes No | Pass Fail | gpm | 87 89 91 Other___ | | | |
| | Unihose 87 89 91 Other ___ | Yes No | Pass Fail | gpm | 87 89 91 Other___ | | | |
| | Unihose 87 89 91 Other ___ | Yes No | Pass Fail | gpm | 87 89 91 Other___ | | | |
| | Unihose 87 89 91 Other ___ | Yes No | Pass Fail | gpm | 87 89 91 Other___ | | | |
| | Unihose 87 89 91 Other ___ | Yes No | Pass Fail | gpm | 87 89 91 Other___ | | | |
| | Unihose 87 89 91 Other ___ | Yes No | Pass Fail | gpm | 87 89 91 Other___ | | | |
| | Unihose 87 89 91 Other ___ | Yes No | Pass Fail | gpm | 87 89 91 Other___ | | | |

**Figure 1**
**Normal Clean Air Separator Operating Configuration[1]**

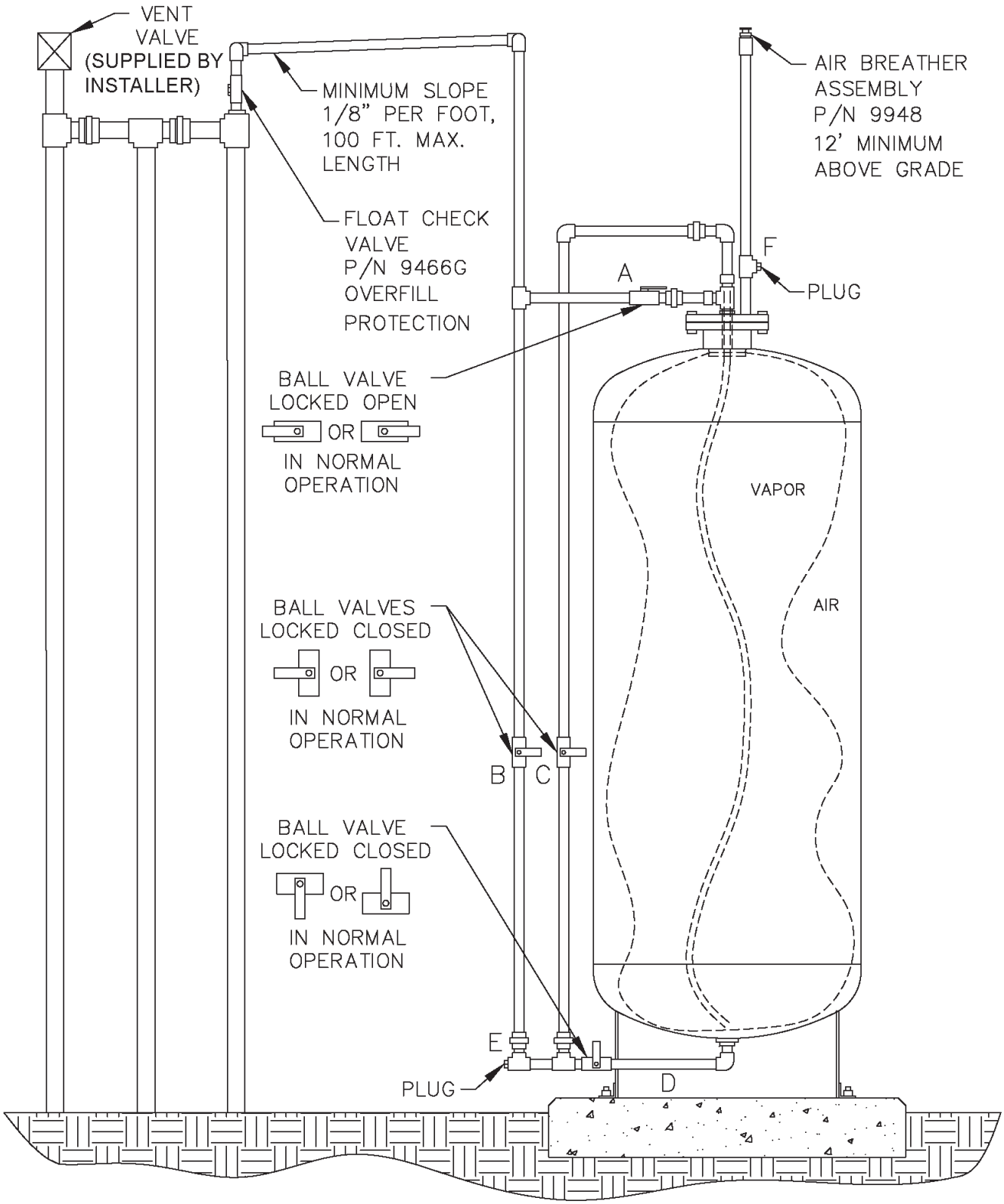


1 Vent stack configuration may be different than what is shown in this figure.

**Figure 1H**
**Normal Horizontal Clean Air Separator Operating Configuration[1]**

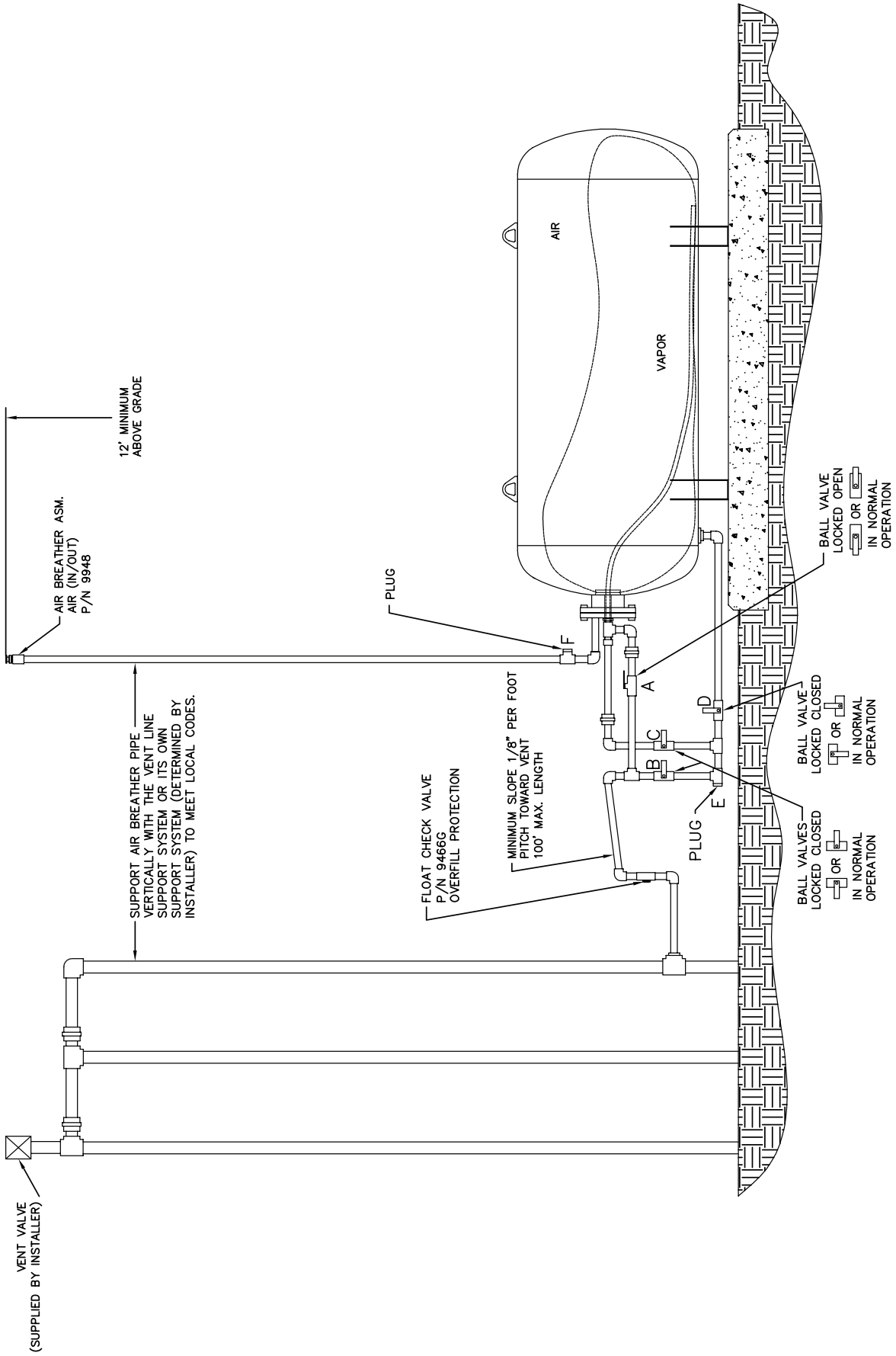


1 Vent stack configuration may be different than what is shown in this figure.

# VR-201-K and VR-202-K - Annual Inspection and Testing Checklist

Checklist results may be used to assist with filling out GDF maintenance log. Date: _____ Page __ of __

| | | Clean Air Separator Test, Exhibit 4 (circle one) | Pressure Decay Test, TP-201.3 & Exhibit 8 (circle one) | Dispenser Number | Dispenser Vapor Line Tightness Test (circle one) | Dispenser Number | Fuel Grade Tested (circle one) | Nozzle V/L Test, Exhibit 5 (circle one) |
|---|---|---|---|---|---|---|---|---|
| **Complete Weekly Inspection Checklist** | **Complete Quarterly Inspection Checklist** | Pass | Pass | | Pass Fail | | 87 89 91 Other___ | Pass Fail |
| | | | | | Pass Fail | | 87 89 91 Other___ | Pass Fail |
| | | | | | Pass Fail | | 87 89 91 Other___ | Pass Fail |
| | | | | | Pass Fail | | 87 89 91 Other___ | Pass Fail |
| | | | | | Pass Fail | | 87 89 91 Other___ | Pass Fail |
| | | | | | Pass Fail | | 87 89 91 Other___ | Pass Fail |
| | | | | | Pass Fail | | 87 89 91 Other___ | Pass Fail |
| | | | | | Pass Fail | | 87 89 91 Other___ | Pass Fail |
| | | Fail | Fail | | Pass Fail | | 87 89 91 Other___ | Pass Fail |
| | | | | | Pass Fail | | 87 89 91 Other___ | Pass Fail |
| | | | | | Pass Fail | | 87 89 91 Other___ | Pass Fail |
| | | | | | Pass Fail | | 87 89 91 Other___ | Pass Fail |
| | | | | | Pass Fail | | 87 89 91 Other___ | Pass Fail |
| | | | | | Pass Fail | | 87 89 91 Other___ | Pass Fail |
| | | | | | Pass Fail | | 87 89 91 Other___ | Pass Fail |
| | | | | | Pass Fail | | 87 89 91 Other___ | Pass Fail |

Healy 900 Series Nozzle

## 1.0 Field Repair Instructions

**NOTE**: Only a Healy Certified Technician can service any problems discovered while conducting the Weekly or Quarterly Inspection and Testing. Provided that there are no other local district requirements, a GDF Owner / Operator can remove and install nozzles, curb hoses, breakaways, flow limiters and whip hoses without a manufacturer certification. Additional certifications may be required in accordance with local district requirements.

### 1.1 Healy Part No. 6395B Mini-Boot Replacement for 900 Series Nozzles

1.1.1 To remove the old Mini-Boot, unscrew the Mini-Boot Clamp (see Sections 1.7 & 1.8, Item 2) and remove.

1.1.2 Grip the Mini-Boot and rotate back and fourth a maximum of 5° degrees in each direction while gently pulling to separate the Mini-Boot from the nozzle.

**Installing the new Mini-Boot**

**NOTE:** *Heating the Mini-Boot in water softens the material, making it easier to install.*

1.1.3 Use a push rod checking tool (.050 hex wrench or 1/16” drill bit) to verify that a clear hole condition exists in the push rod hole of the spout body before proceeding.

1.1.4 Align the push rod extending from the nozzle end of the boot with the 1/16” hole in the spout body while also aligning the 3/16” hole in the mini-boot with the 3/16” pin on the spout body (See photos below).

1.1.5 Start the push rod into the 1/16” hole and slide the boot axially into engagement with the spout body and the boot location pin while limiting angular rotation of the boot to 5° degrees in each direction to avoid bending the push rod.

1.1.6 Install the mini-boot clamp and tighten securely. Verify that the “HEALY” logo on the Mini-Boot is aligned with the top center of the nozzle.

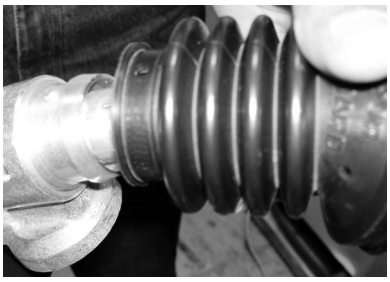

1.1.7 Verify that the nozzle will not dispense fuel when the dispenser is authorized (ready to dispense fuel) and the boot is in a free state by holding the nozzle into an approved container (do not compress the mini-boot in any manner) and actuate the nozzle. No fuel should dispense. If fuel does not dispense, proceed to step 1.1.8. Any nozzle that dispenses fuel with the mini-boot in a free state condition must be repaired or replaced.

1.1.8 Verify that the nozzle will dispense fuel when the dispenser is authorized and the nozzle spout is inserted into a vehicle fill-pipe to a position 1/8” short of locking the spout anchor ring over the rim of the fill-pipe opening or manually held back while dispensing into an approved container. Any nozzle that does not dispense fuel must be repaired or replaced.

## 1.2 Healy Part No. 8155 Spout Replacement

1.2.1 Remove the Mini-Boot using the procedure from Section 1.1.

1.2.2 Use a Phillips Screwdriver to remove the # 8 pan head Spout Screw & O-ring, (see Sections 1.7 & 1.8, Item 14) holding the spout in place.

1.2.3 With the screw removed, using a maximum twisting motion of 15° degrees in each direction, separate the nozzle body and the spout. Be sure that the 3 O-rings from the discarded spout assembly do not remain in the nozzle body. There is a 4$^{th}$ O-ring, furthest from the opening that remains inside the nozzle. Leave this O-ring in place.

### Installing the New Spout Assembly

1.2.4 Install the new (pre-lubed) O-rings that are provided with the Healy Part No. 8155 Replacement Spout on the new spout assembly.

1.2.5 Carefully insert the spout into the nozzle, lightly pushing together until the spout aligns itself and resistance is felt. Using a maximum twisting motion of 15° degrees and light pressure, slide the pieces together, seating the o-rings and aligning the screw threads in the spout housing with the hole in the nozzle casting.

1.2.6 Install the new # 8 Panhead Spout Screw & O-Ring, (provided with the Healy Part No. 8155 Replacement Spout), and tighten securely to 12 inch pounds.

1.2.7 Install the Mini-Boot and test nozzle operation using the procedure from Sections 1.1.3 through 1.1.8.

**Testing the New Spout:**

**All spout replacements must be tested to ensure the installation has been completed correctly.**

1.2.8 Dispense product into a container deep enough to cover the small hole near the tip of the spout and verify that the dispensing rate is between 6.0 – 10.0 gpm with the nozzle lever held in the full open (handheld) position. While dispensing, with the nozzle lever held in the full open (handheld) position, immerse the spout until the hole is covered. If shutoff does not occur, turn off the dispenser, remove the spout, and check the o-rings. Replace the o-rings as necessary (Part No. 6206-OR Spout O-Ring Kit) and repeat Sections 1.2.7 through 1.2.8. If shutoff does occur, go to Section 1.2.9.

Note: If repeated attempts to repair nozzle does not result in successful shut off, replace the nozzle.

1.2.9 Repeat Section 1.2.8 two additional times (3 tests total) to ensure that the auto shutoff feature is working properly. There should be no hesitation to the shutoff; it should be quick and positive. If shutoff tests are successful, the nozzle can be put back into service. If either additional shutoff test fails, turn off the dispenser, remove the spout, and check the o-rings. Replace the o-rings as necessary (Part No. 6206-OR Spout O-Ring Kit) and repeat Sections 1.2.7 through 1.2.9.

Note: If repeated attempts to repair nozzle does not result in successful shut off, replace the nozzle.

1.3 **Healy Scuffguard Replacement** (Part No. depends upon scuffguard color - contact Healy distributor for correct part no.)

1.3.1 Remove the Mini-Boot using the procedure from Section 1.1.

1.3.2 Slide a long screwdriver under the Scuffguard (see Sections 1.7 & 1.8, Item 5) in the area of the main valve cap nut on the top of the nozzle.

1.3.3 Pry upward to clear the top of the main valve cap, and then pull steadily toward the spout to remove.

1.3.4 Installation is the reverse of this method. It works best with the butt of the nozzle held in a vise. In cold weather the Scuffguard may not be pliable enough to use the above method, carefully (do not damage the nozzle) cut the old Scuffguard off with a knife and replace it with a new “warmed” Scuffguard by using the reverse of the step above.

1.3.5 Install the Mini-Boot and test nozzle operation using the procedure from Sections 1.1.3 through 1.1.8.

## 1.4 Healy Part No. 469 Handle Cover Replacement

1.4.1 Grasp the lower edges of the Handle Cover (see Sections 1.7 & 1.8, Item 6) and pull the cover off with an upward motion.

1.4.2 Installation is the reverse of this procedure. Be sure the pointed wings on the front of the cover are slid under the Scuffguard.

## 1.5 Healy Part No. 6358 Handguard Replacement

1.5.1 This is best done with the nozzle detached from the hose. The front and rear guard pins must be removed. Back up the head side of the pin with a suitable socket and drive out the guard pins using a 3/32” drive pin punch or equivalent. The spring-loaded hold-open clip will pop out when the rear pin is removed. Be sure to observe the orientation of the spring so it can be properly reinstalled.

1.5.2 Remove the Handguard (see Sections 1.7 & 1.8, Item 10) carefully. The lever will drop down and the lever pivot pin will be free and could possibly slide out. Place the new Handguard into position and install a new front guard pin (Figure 1, Item 13) through the Handguard. *Do not peen at this time*.

1.5.3 Position the hold-open clip (see Sections 1.7 & 1.8, Item 7) over the handguard. Insert a new rear guard pin (see Sections 1.7 & 1.8, Item 8) through one ear of the clip, handguard and approximately 1/8” through the casting. Slide the coil spring (see Sections 1.7 & 1.8, Item 9) into position with the “hook” on the hold-open clip. Push in the spring so the pin passes through the coil and into the other ears on the casting, handguard and clip. Be sure the hold-open clip is installed properly before peening-over the free ends of the two pins.

## 1.6 Healy Part No. 6130-4 Lever Replacement

1.6.1 Remove the Handguard using the instructions in Section 1.5 to expose the Lever. There is a washer around the plunger under the Lever. Observe how these are installed and be sure to re-use them with the new Lever.

1.6.2 With the Lever released, the white plunger will pull back towards the casting and make it difficult to re-install the pin on a new Lever. Use a small screwdriver to reach through one mounting hole in the new Lever and engage the hole in the plunger. Push the blade through the plunger, align the two holes, insert the pin, and remove the screwdriver to retain the Lever.

1.6.3 Replace the Handguard using the instructions in Section 1.5.

## 1.7 900 Series Nozzle Illustration

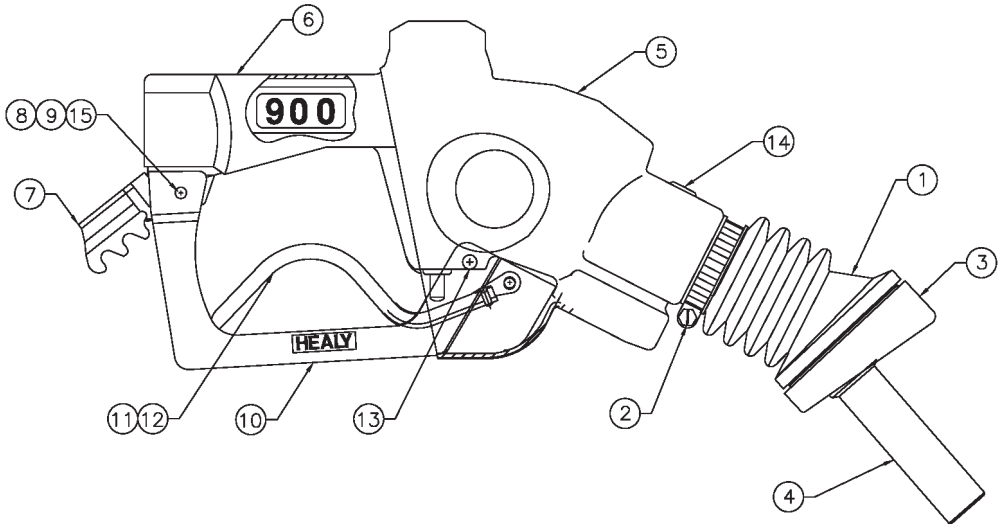


## 1.8 Field Replaceable Parts – 900 Series Nozzle

| Illustration Reference | Part Description | Healy Part Number |
|---|---|---|
| 1 | 900 Mini-Boot Assembly | 6395B |
| 2 | Mini-Boot Clamp | 640956 |
| 3 | Face Seal Assembly with Wire | 279A |
| 4 | Spout Assembly | 8155 |
| 5 | Scuffguard, Assorted Colors | Contact Healy Distributor |
| 6 | Handle Cover | 469 |
| 7 * | Hold Open Clip | 6238 (3 position) or 6238-2 (2 position) |
| 8 | Rear Guard Pin | 239-L |
| 9 * | Spring | 6249 |
| 10 | Handguard | 6358 |
| 11 | Lever Cover | 235-C |
| 12 * | Lever Assembly | 6130-4 |
| 13 * | Front Guard Rivet | 219 |
| 14 | Spout Screw & O-ring | 6102A |
| 15 | Pal Nut | 240SS |
| * Order Healy Part No. Z057 or Z058 Hold-Open Clip Kit (Includes Healy Part Numbers: 6238 (Z057) or 6238-2 (Z058) Hold-Open Clip, 239-L Rear Guard Pin, 6249 Spring, 6130-4 Lever Assembly, 240SS Pal Nut, 219 Front Guard Rivet) | | |

## 1.9 Healy Part No. 8034-1 V/L Test Sleeve for use with Healy 900 Nozzles

### 1.9.1 Overview

The 8034-1 Vapor / Liquid Test Sleeve (See Figure 1) is used to determine the Vapor to Liquid Volume Ratio on Healy Systems Model 900 Series Vapor Assist Nozzle. This Test Sleeve is required to perform a V/L ratio test with Exhibit 5 of either Executive Order VR-201-J or VR-202-J. A V/L ratio of between 0.95 and 1.15 is required (at a flow rate of between 6.0 - 10.0 gallons per minute).

The only serviceable part in the 8034-1 Test Sleeve is the Spout Seal O-Ring (Healy Part No. 63034). Inspect the Spout Seal O-ring before performing a test. Any cuts or tears will allow air to be ingested and give an inaccurate reading.

Note: Motor oil (any weight) is acceptable for lubricating the O-Ring. Contact Healy Technical Services with any questions about other lubricants that may be used in conducting this test.

### 1.9.2 Test Procedure

**Note: Conduct all pre-tests and testing in accordance with Exhibit 5 of either Executive Order VR-201-J or VR-202-J.**

1.9.2.1 Slide the V/L Adaptor over the spout tip and compress the boot until the spout anchor ring contacts stop in the V/L Adaptor.

1.9.2.2 Hold the V/L Adaptor in contact with the spout anchor ring and hand tighten thumbscrew to secure adaptor. The thumbscrew and Healy logo on top of the nozzle boot face seal must be in vertical alignment to imitate fueling an unleaded vehicle.

1.9.2.3 Insert pins to seal the two bleed holes in the boot (directly behind face seal assembly).

1.9.2.4 Hold magnet assembly against vinyl scuffguard directly below ORVR sensor housing and secure in place with the Velcro strap as shown on Figure 1. A vacuum level of 0.1” wc may activate the ORVR sensor, causing a substantial decrease (error) in the V/L ratio. The magnet locks out the ORVR sensor to avoid false results in V/L testing of the 900 Nozzle.

1.9.2.5 Check the strength of the magnet prior to fastening it to the nozzle. The magnet should be capable of holding about two pounds of weight. Note: A typical gas cylinder safety cap weighs about 2 lbs.

1.9.2.6 Proceed with V/L test. If the grade point tested is not within the limit of the Executive Order, use the procedure outlined in Section 1.10, How to Adjust the V/L (Vapor over Liquid) Ratio on the Healy 900 Model Nozzle, to adjust the V/L.

Note: If more than one nozzle share vacuum plumbing with the nozzle being tested, one troubleshooting method for a low V/L ratio is to seal all nozzles other than the nozzle being tested, using plastic bags and tape or rubber bands. If leaks in the nozzles/check valves served by a common vacuum pump cause the bags to deflate, the low V/L ratio may have been caused by a leak through an idle nozzle during the test. The V/L test to verify compliance, however, shall be conducted without “bagging” any of the nozzles.

1.9.2.7 Remove the seal pins and magnet assembly; loosen thumbscrew and remove V/L adaptor from nozzle.

Figure 1

Healy Systems V/L Test Sleeve
Part No. 8034-1

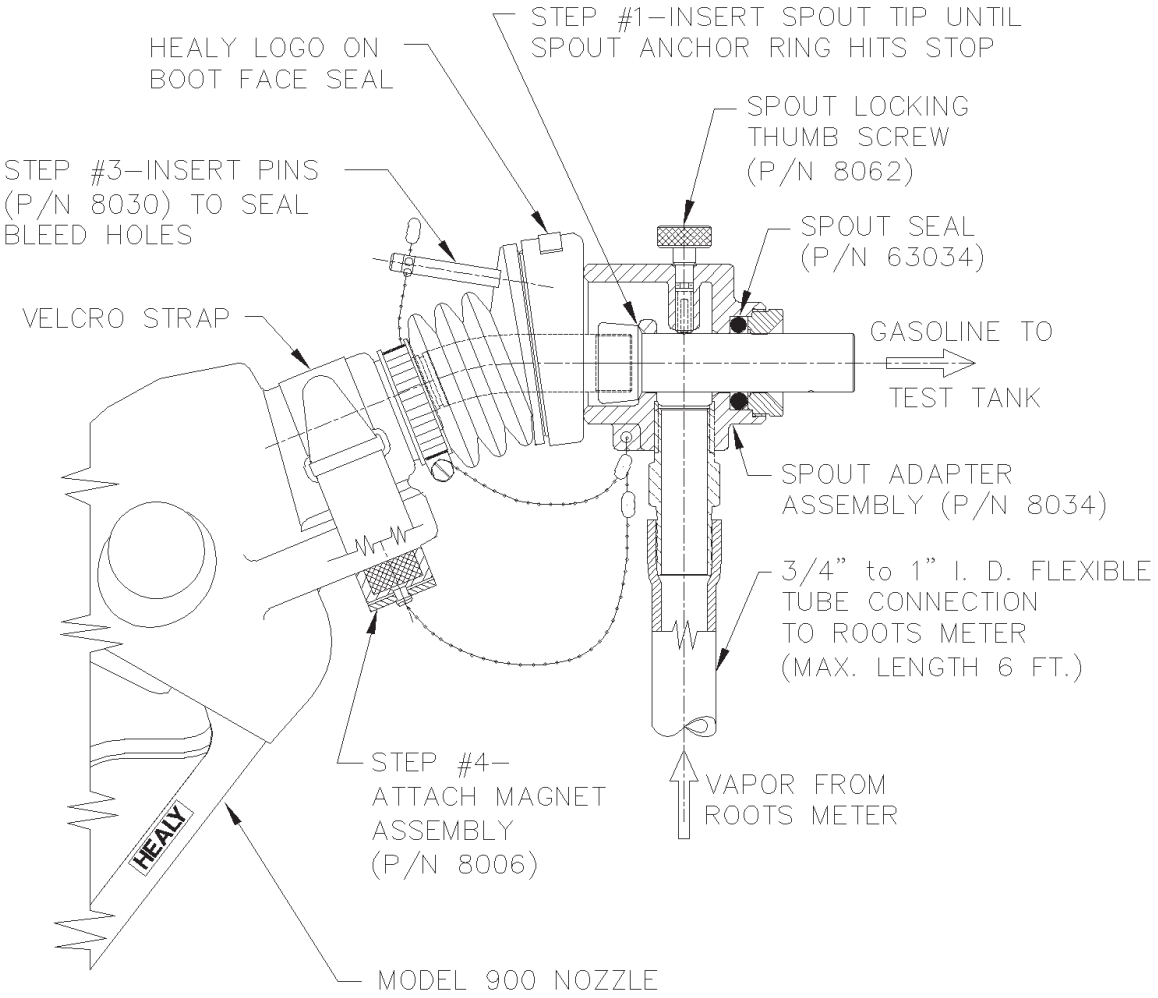

## 1.10 How to Adjust the V/L (Vapor over Liquid) Ratio on the Healy 900 Series Nozzle

1.10.1 Remove, or pull forward, the Scuffguard from the nozzle body.

1.10.2 With Spout of the Nozzle facing to your left, locate the Vapor Flow Control Valve on the side of the Nozzle Body. *Do not remove cover assembly*.

1.10.3 Locate the opening in the center on the cover of the Vapor Flow Control Valve. Insert a .050 hex-key into the center opening of the Vapor Valve Cover Assembly.

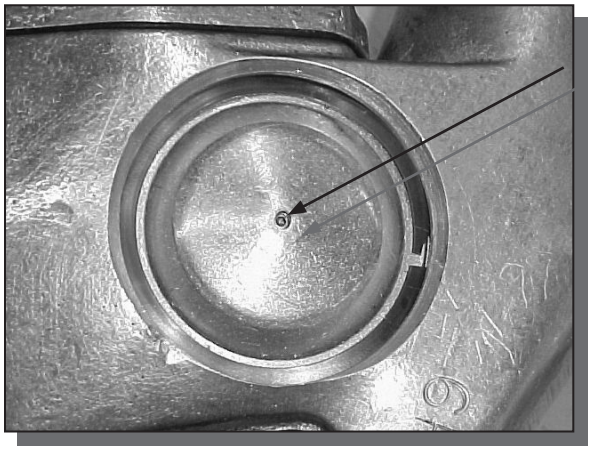

1.10.4 After making any adjustments as show below, the nozzle has to be retested as specified in Exhibit 5, Section 7, of either Executive Order VR-201-J or VR-202-J, for V/L (Vapor over Liquid) readings.

1.10.4.1 Adjust clockwise to increase V/L reading.
1.10.4.2 Adjust counter-clockwise to decrease V/L reading.
1.10.4.3 Repeat Section 1.10.4 until the nozzle V/L is between 0.95 and 1.15.

# INSTALLATION INSTRUCTIONS for HEALY SYSTEMS, INC. CLEAN AIR SEPARATOR

The Model 9961 or 9961H, Healy Systems Clean Air Separator (CAS) consists of a 400 gallon steel vapor processor vessel that contains a fuel resistant bladder to hold excess gasoline vapors that may develop in gasoline storage tanks during idle periods of gasoline dispensing facility operation. Models and Drawings with a "H" suffix apply to horizontal CAS installations and those without a "H" suffix apply to vertical CAS installations. The CAS assembly weighs approximately 800 pounds which makes it necessary to have a power assisted lifting device available at the installation site to remove the CAS from the transportation vehicle and place it on the required concrete pad (see drawing 9900-9945 or 9900-9945H). The pad (level within 1/8"/foot) is located within 100 feet to the gasoline storage tank vent lines. The pad is a requirement of this installation. DO NOT PLACE THE CLEAN AIR SEPARATOR DIRECTLY ON THE GROUND OR ASPHALT SURFACE. NOTICE: The installer is responsible to ensure that the installation meets the latest edition requirements of NFPA 30A, Chapter 10. No electrical connections are required. The CAS securement method shown in drawing 9900-9945 or 9900-9945H shall be approved by the local authority having jurisdiction with respect to wind and seismic loading. Installer shall not loosen, rotate or remove factory installed fittings or flange as this may damage factory seals and void warranty.

In addition to the vapor processor vessel, there is a hardware kit that contains the following:

- 4 Locking 1" NPT Ball Valves
- 4 Pad locks (keyed alike)
- 1 Breather Assembly, Healy Model 9948
- 1 Float Check Valve Assembly, Model 9466G

Reference the appropriate Healy Systems installation drawing (9900-9942, 9900-9942H, 9900-9971, 9900-9971H, 9900-9972, 9900-9972H, 9900-9973 or 9900-9973H of this manual) for placement of the above parts for the vent stack configuration required by the local Authority Having Jurisdiction (AHJ) for the Underground Storage Tank (UST) system. **A flexible connection between the Clean Air Separator and the vent line(s) is allowable if required by the local Authority Having Jurisdiction (AHJ) to meet seismic requirements. Should the flex connection be installed such that it is not supported, the slope of the flex connection shall be greater than the 1/8"/foot slope required for the rest of the one inch galvanized piping.** The local contractor is responsible to provide all necessary, galvanized piping, non-hardening, UL classified pipe joint compound and plumbing fittings. Additional Pressure/Vacuum (P/V) vent valves to complete installation are not included in the hardware kit. Healy is not responsible for the warranty of any other P/V vent valve purchased to complete installation.

The CAS arrives at the site assembled and tested. All plumbing shall be done using 1" galvanized steel pipe (Schedule 40) and approved nipples, as called out in the installation drawing appropriate for the site installation. Mounting hardware shall be galvanized or stainless steel. Careful attention must be paid to the installation drawing appropriate for the site installation to assure proper operation of the bladder system. Do not inflate the bladder assembly after installation.

It is important that the CAS be secured to the concrete pad as shown in drawing 9900-9945 or 9900-9945H of this manual to prevent any unintentional repositioning of the CAS as the connecting plumbing to the vent system is accomplished.

OPERATION AND PURGING

## NORMAL OPERATION:

- There are four ball valves on the CAS. Each ball valve is to be installed so as to allow opening and closing with nothing obstructing the full range (90°) of movement. In normal operation, only the valve (A) at the top of the CAS shall be open – the other three valves (B, C and D) shall be closed. All four valves shall be locked in the above positions. The two plugs (E and F) should be installed using a non-hardening, UL classified pipe joint compound and tightened to 60 ft-lbs.

DRAINING THE BLADDER:

- Any liquid coming over from the vent system would have collected above the valve (A) in the riser pipe before going into the bladder. An inspection of the need to drain the bladder is easily made by removing the plug (E) at the tee on the bottom plumbing of the CAS. Before removing this plug, open the valve (B) above the tee to release any liquid into the piping below. Wait approximately 30 seconds and then close the valve (B). Now, remove the plug (E) at the tee on the bottom plumbing of the CAS – be sure to have a container suitable for gasoline available to catch fluid. If liquid in excess of 16 ounces (473 ml) drains out, the bladder should also be drained.

- Should it be necessary to drain the bladder:
    1. Close the upper ball valve (A) (usually open) leading to the gasoline storage tank vent lines.
    2. Open the valve (C) that goes to the internal syphon tube. Be sure the other three ball valves (A, B and D) that connect to the vent lines and CAS are closed.
    3. Remove the plug (E) from the bottom tee and connect an explosion proof evacuation pump capable of handling liquid. Have a liquid tight, container suitable for gasoline positioned to receive any fluid that may exit the system and start the pump. If no liquid returns within 30 seconds, the bladder is dry – discontinue pumping, remove the pump, replace the plug (E) and return the ball valves to their normal, locked, positions.

DRAINING THE CAS:

- Should it be necessary to drain the CAS (between the bladder and steel wall):
    1. Close the ball valve at the top (A) of the CAS and also the two valves (B and C) on the vertical risers.
    2. Remove the plug (E) in the bottom tee and place a metal container below the pipe opening.
    3. Carefully open the ball valve (D) at the bottom of the CAS – observe that the container that is being drained into does not overflow – empty container as required until fluid no longer comes from the pipe when the valve is open.
    4. Close the ball valve (D) and replace the plug (E) into the tee.
    5. Return all ball valves to their normal locked positions.

DRW NO: 9900–9945

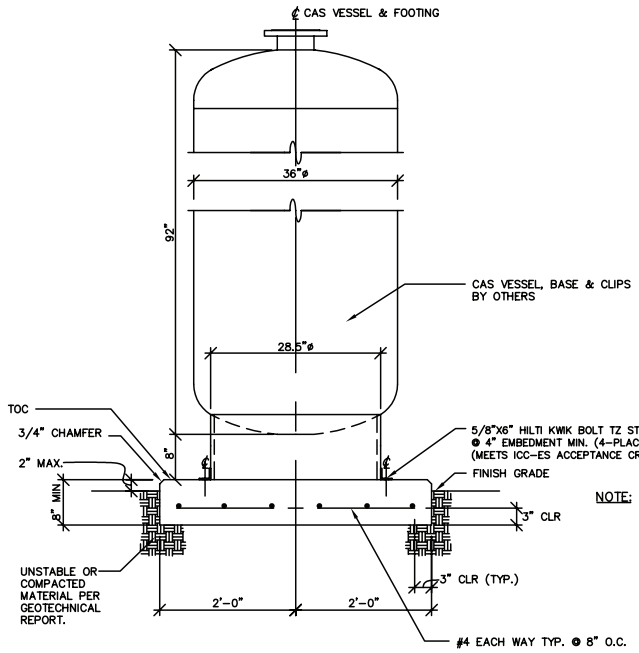


SECTION @ CAS SLAB
SCALE = 3/4" = 1'–0"

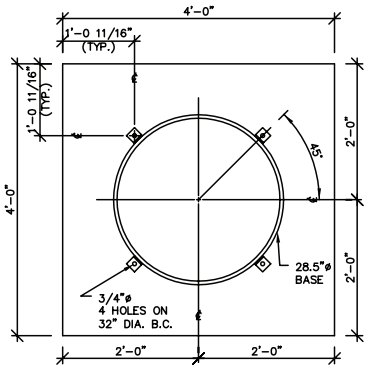


BASE PLAN
SCALE = 3/4" = 1'–0"

NOTE:
⚠ WHERE ICC–ES ACCEPTANCE CRITERIA IS NOT REQUIRED, 5/8" X 6" HILTI KWIK BOLT 3 @ 4" EMBEDMENT MIN. CAN BE USED (PER ESR–1385 REPORT, ISSUED 09/01/04).

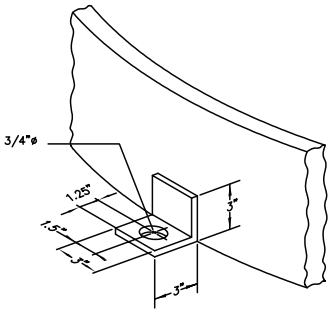


TYPICAL HOLD DOWN CLIP
SCALE = NONE

CRITERIA
SOIL BEARING 1000 psf
BASIC WIND SPEED 100mph
SEISMIC $S_s$=2g
$S_{s1}$=1g
MIN. CONCRETE COMP STRENGTH, $f_c'$ = 2500 psi
MIN. REINF. YIELD STRENGTH, $f_y$ = 40000 psi

| REV | DESCRIPTION | ECN NO | BY | DATE |
|---|---|---|---|---|
| 7 | ADDED CAS DIMENSIONS, REVISED CRITERIA LIST | – | TF/MB | 01/02/08 |
| 6 | KB–TZ SS WAS KB3, ESR–1917 WAS ESR–1385, ADDED NOTE 1 | – | TF/MB | 12/21/07 |

The information disclosed hereon includes proprietary rights of Franklin Fueling Systems, Inc. Neither this drawing nor the information disclosed thereon may be reproduced or transferred to other documents, or used or disclosed to others for any purpose, except as specifically authorized in writing by Franklin Fueling Systems. This drawing must be returned to Franklin Fueling Systems upon request.

MATERIAL:

DO NOT SCALE DRAWING

STANDARD INCH TOLERANCES (UNLESS OTHERWISE SPECIFIED): .XX ± .02, .XXX ± .005, ANGULAR ± 1/2°

SPECIAL DIST:

Franklin Fueling Systems
Madison, WI 53718

TITLE: CLEAN AIR SEPARATOR MOUNTING SLAB DETAILS

| DRAWN: | DATE: | DRW NO: | SUFFIX: |
|---|---|---|---|
| JWH | 07/31/02 | 9900–9945 | |
| APPRVL: | DATE: | SCALE: 1/8 | SHEET 1 OF 1 |

DRW NO: 9900–9945H

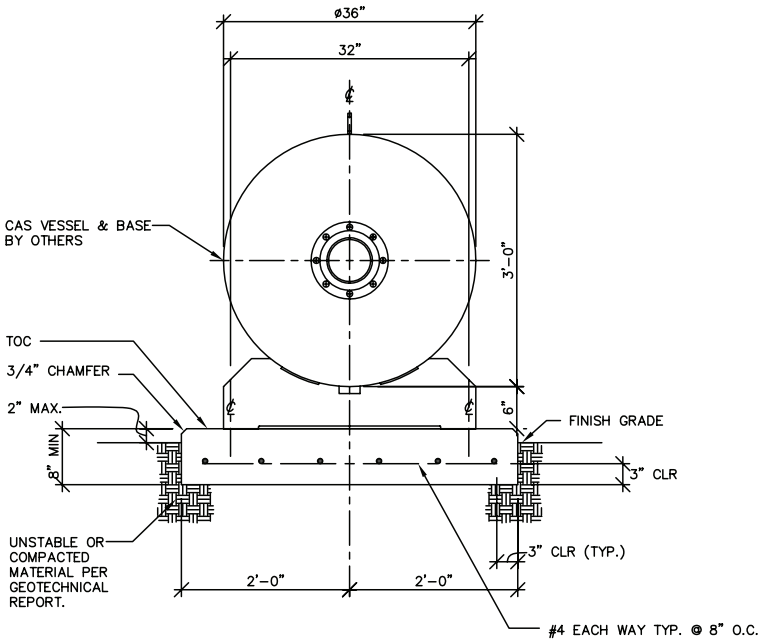


SECTION @ CAS SLAB

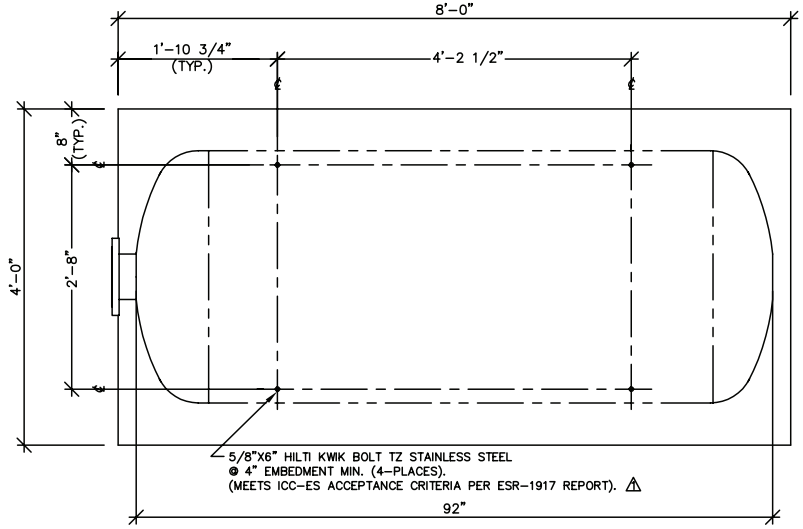


BASE PLAN

NOTE:
⚠ WHERE ICC–ES ACCEPTANCE CRITERIA IS NOT REQUIRED, 5/8" X 6" HILTI KWIK BOLT 3 @ 4" EMBEDMENT MIN. CAN BE USED (PER ESR–1385 REPORT, ISSUED 09/01/04).

CRITERIA
SOIL BEARING 1000 psf
BASIC WIND SPEED 100mph
SEISMIC $S_s$=2g
$S_{s1}$=1g
MIN. CONCRETE COMP STRENGTH, $f_c'$ = 2500 psi
MIN. REINF. YIELD STRENGTH, $f_y$ = 40000 psi

| REV | DESCRIPTION | ECN NO | BY | DATE |
|---|---|---|---|---|
| 5 | ADDED CAS DIMENSIONS, REVISED CRITERIA LIST | – | TF/MB | 01/02/08 |
| 4 | KB–TZ SS WAS KB3, ESR–1917 WAS ESR–1385, ADDED NOTE 1 | – | TF/MB | 12/21/07 |

The information disclosed hereon includes proprietary rights of Franklin Fueling Systems, Inc. Neither this drawing nor the information disclosed thereon may be reproduced or transferred to other documents, or used or disclosed to others for any purpose, except as specifically authorized in writing by Franklin Fueling Systems. This drawing must be returned to Franklin Fueling Systems upon request.

MATERIAL:

DO NOT SCALE DRAWING

STANDARD INCH TOLERANCES (UNLESS OTHERWISE SPECIFIED)
.XX ± .02
.XXX ± .005
ANGULAR ± 1/2°

SPECIAL DIST:

Franklin Fueling Systems
Madison, WI 53718

TITLE:
CLEAN AIR SEPARATOR HORIZONTAL MOUNTING SLAB DETAILS

| DRAWN: | DATE: | DRW NO: | SUFFIX: |
|---|---|---|---|
| TF | 05/22/07 | 9900–9945 | H |
| APPRVL: MDB | DATE: 06/05/07 | SCALE: 3/4"=1' | SHEET 1 OF 1 |

DRW NO: 9900–9942

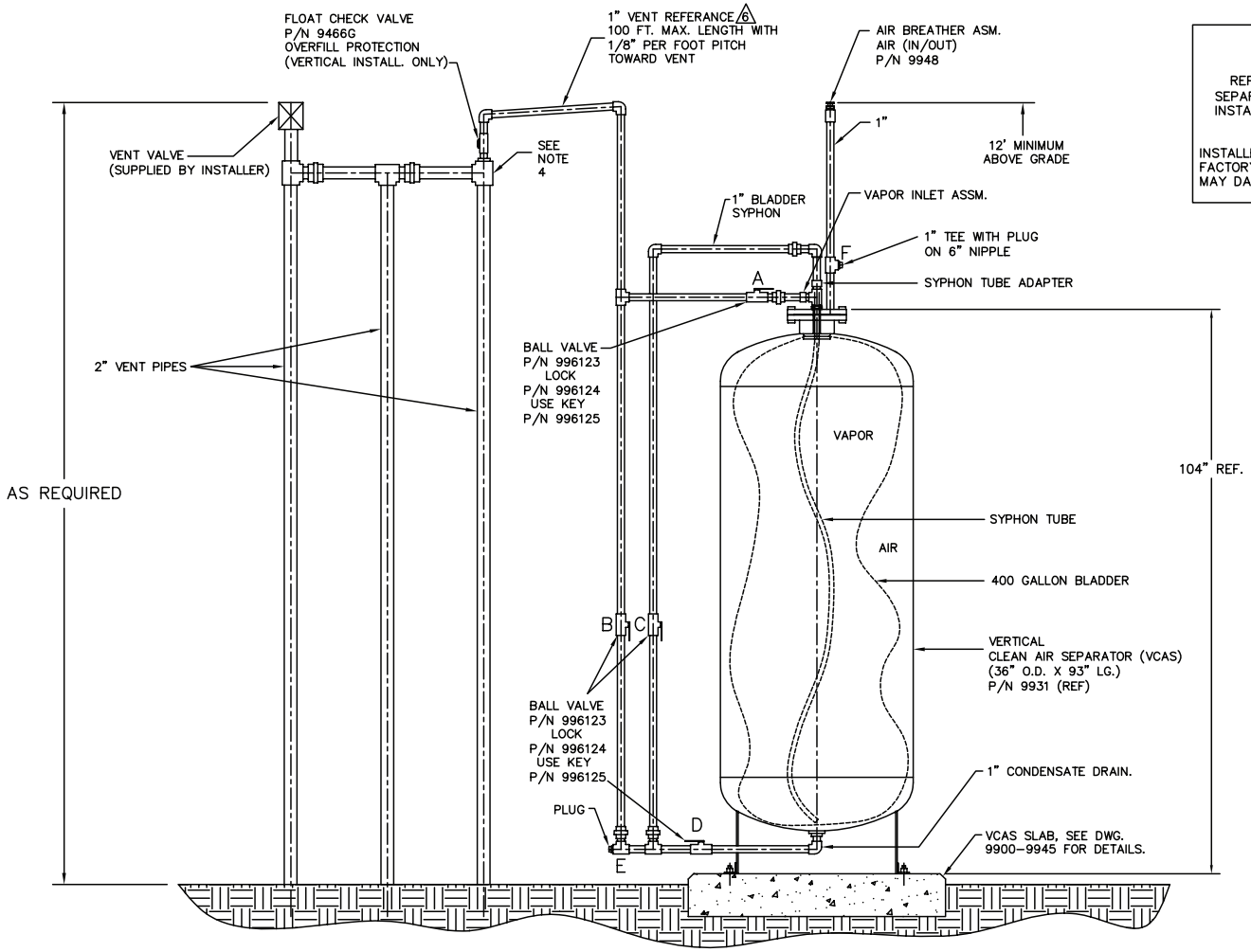


NOTICE

DRAWINGS ARE TWO DIMENSIONAL REPRESENTATION OF TYPICAL CLEAN AIR SEPARATOR (CAS) INSTALLATION. ACTUAL CAS INSTALLATIONS WILL VARY SLIGHTLY FROM THE REPRESENTATION SHOWN.

INSTALLER SHALL NOT LOOSEN, ROTATE OR REMOVE FACTORY INSTALLED FITTINGS OR FLANGE AS THIS MAY DAMAGE FACTORY SEALS AND VOID WARRANTY.

NOTE:
1 – ALL BALL VALVES (B.V.) TO BE UL LISTED AND HAVE PADLOCK FEATURE.
2 – PASSIVE PRESSURE CONTROL–NO ELECTRICAL POWER REQUIRED.
3 – AIR BREATHER MUST BE INSTALLED AT A MINIMUM HEIGHT OF 12' ABOVE GRADE.
4 – VENT LINE TIE IN CAN BE INSTALLED ANYWHERE ALONG THE VENT STACK LINE PROVIDED THAT PIPE SLOPE IS MAINTAINED AND THE CHECK VALVE IS IN THE CORRECT VERTICAL INSTALLATION.
5 – ONLY GALVANIZED PIPE IS TO BE USED FOR PIPING CONNECTIONS
6 – A FLEXIBLE CONNECTION BETWEEN THE CLEAN AIR SEPARATOR AND THE VENT LINE(S) IS ALLOWABLE IF REQUIRED BY THE LOCAL AUTHORITY HAVING JURISDICTION (AHJ) TO MEET SEISMIC REQUIREMENTS. SHOULD THE FLEX CONNECTION BE INSTALLED SUCH THAT IT IS NOT SUPPORTED, THE SLOPE OF THE FLEX CONNECTION SHALL BE GREATER THAN THE 1/8" PER FOOT SLOPE REQUIRED FOR THE REST OF THE ONE INCH GALVANIZED PIPING.

The information disclosed hereon includes proprietary rights of Franklin Fueling Systems, Inc. Neither this drawing nor the information disclosed thereon may be reproduced or transferred to other documents, or used or disclosed to others for any purpose, except as specifically authorized in writing by Franklin Fueling Systems. This drawing must be returned to Franklin Fueling Systems upon request.

MATERIAL:

DO NOT SCALE DRAWING

STANDARD INCH TOLERANCES (UNLESS OTHERWISE SPECIFIED): .XX ± .02, .XXX ± .005, ANGULAR ± 1/2°

SPECIAL DIST:

| REV | DESCRIPTION | ECN NO | BY | DATE |
|---|---|---|---|---|
| 15 | ADDED NOTE 6 | 401666 | TF/MDB | 03/20/08 |

Franklin Fueling Systems
Madison, WI 53718

TITLE: CLEAN AIR SEPARATOR VERTICAL INSTALLATION

| DRAWN: JWH | DATE: 05/14/02 | DRW NO: 9900–9942 | SUFFIX: |
|---|---|---|---|
| APPRVL: MDB | DATE: 06/05/07 | ACAD HLY | SCALE: N.T.S. | SHEET 1 OF 1 |

DRW NO: 9900–9971

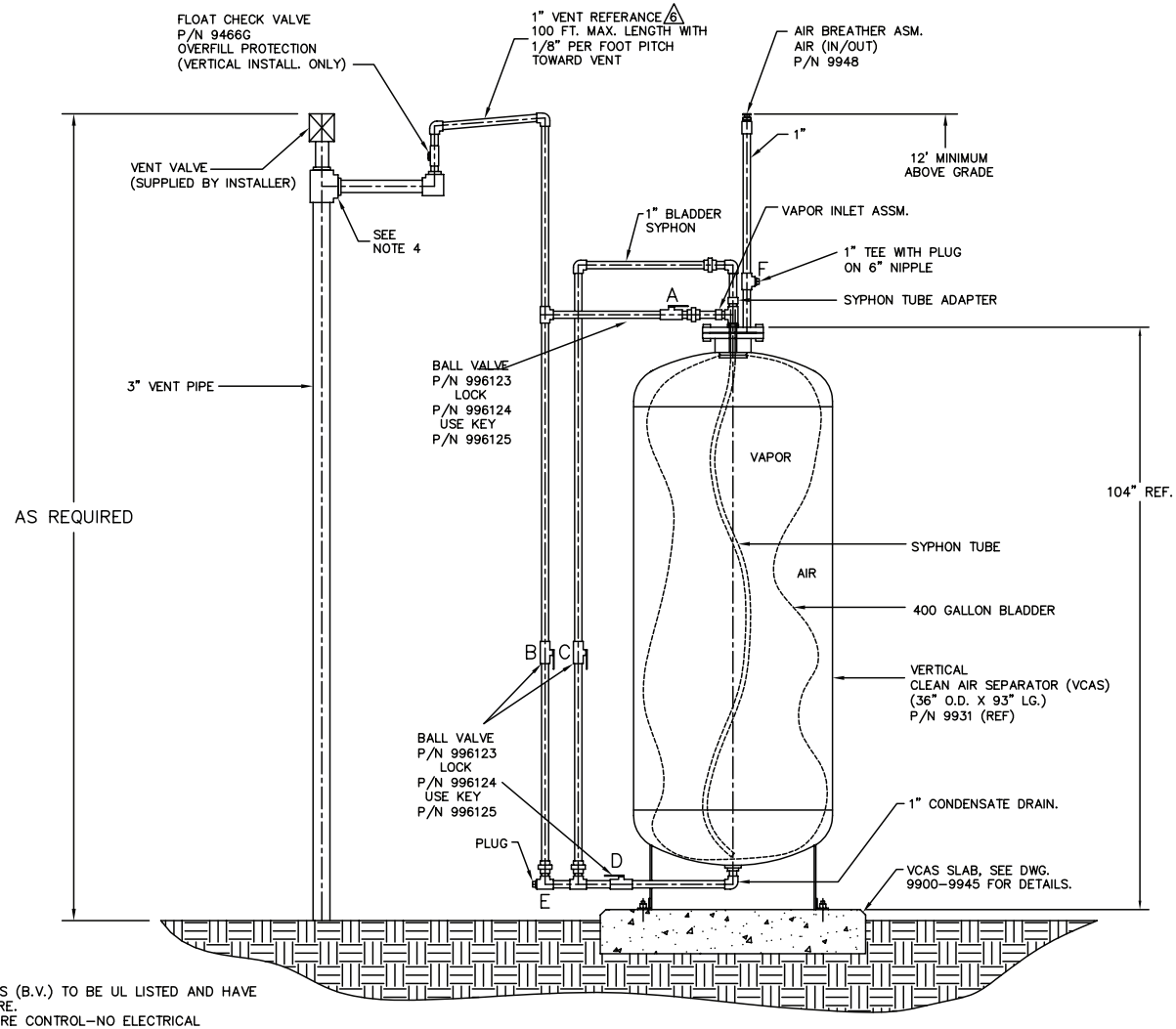


NOTICE

DRAWINGS ARE TWO DIMENSIONAL REPRESENTATION OF TYPICAL CLEAN AIR SEPARATOR (CAS) INSTALLATION. ACTUAL CAS INSTALLATIONS WILL VARY SLIGHTLY FROM THE REPRESENTATION SHOWN.

INSTALLER SHALL NOT LOOSEN, ROTATE OR REMOVE FACTORY INSTALLED FITTINGS OR FLANGE AS THIS MAY DAMAGE FACTORY SEALS AND VOID WARRANTY.

NOTE:
1 – ALL BALL VALVES (B.V.) TO BE UL LISTED AND HAVE PADLOCK FEATURE.
2 – PASSIVE PRESSURE CONTROL–NO ELECTRICAL POWER REQUIRED.
3 – AIR BREATHER MUST BE INSTALLED AT A MINIMUM HEIGHT OF 12' ABOVE GRADE.
4 – VENT LINE TIE IN CAN BE INSTALLED ANYWHERE ALONG THE VENT STACK LINE PROVIDED THAT PIPE SLOPE IS MAINTAINED AND THE CHECK VALVE IS IN THE CORRECT VERTICAL INSTALLATION.
5 – ONLY GALVANIZED PIPE IS TO BE USED FOR PIPING CONNECTIONS
6 – A FLEXIBLE CONNECTION BETWEEN THE CLEAN AIR SEPARATOR AND THE VENT LINE(S) IS ALLOWABLE IF REQUIRED BY THE LOCAL AUTHORITY HAVING JURISDICTION (AHJ) TO MEET SEISMIC REQUIREMENTS. SHOULD THE FLEX CONNECTION BE INSTALLED SUCH THAT IT IS NOT SUPPORTED, THE SLOPE OF THE FLEX CONNECTION SHALL BE GREATER THAN THE 1/8" PER FOOT SLOPE REQUIRED FOR THE REST OF THE ONE INCH GALVANIZED PIPING.

| REV | DESCRIPTION | ECN NO | BY | DATE |
|---|---|---|---|---|
| 8 | ADDED NOTE 6 | 401666 | TF / MDB | 03/20/08 |

The information disclosed hereon includes proprietary rights of Franklin Fueling Systems, Inc. Neither this drawing nor the information disclosed thereon may be reproduced or transferred to other documents, or used or disclosed to others for any purpose, except as specifically authorized in writing by Franklin Fueling Systems. This drawing must be returned to Franklin Fueling Systems upon request.

MATERIAL:

DO NOT SCALE DRAWING

STANDARD INCH TOLERANCES (UNLESS OTHERWISE SPECIFIED): .XX ± .02, .XXX ± .005, ANGULAR ± 1/2°

SPECIAL DIST:

Franklin Fueling Systems
Madison, WI 53718

TITLE: CLEAN AIR SEPARATOR VERTICAL INSTALLATION (1 VENT)

| DRAWN: | DATE: | DRW NO: | SUFFIX: |
|---|---|---|---|
| JWH | 05/14/02 | 9900–9971 | |
| APPRVL: MDB | DATE: 06/05/07 | ACAD HLY | SCALE: N.T.S. SHEET 1 OF 1 |

DRW NO: 9900–9942H

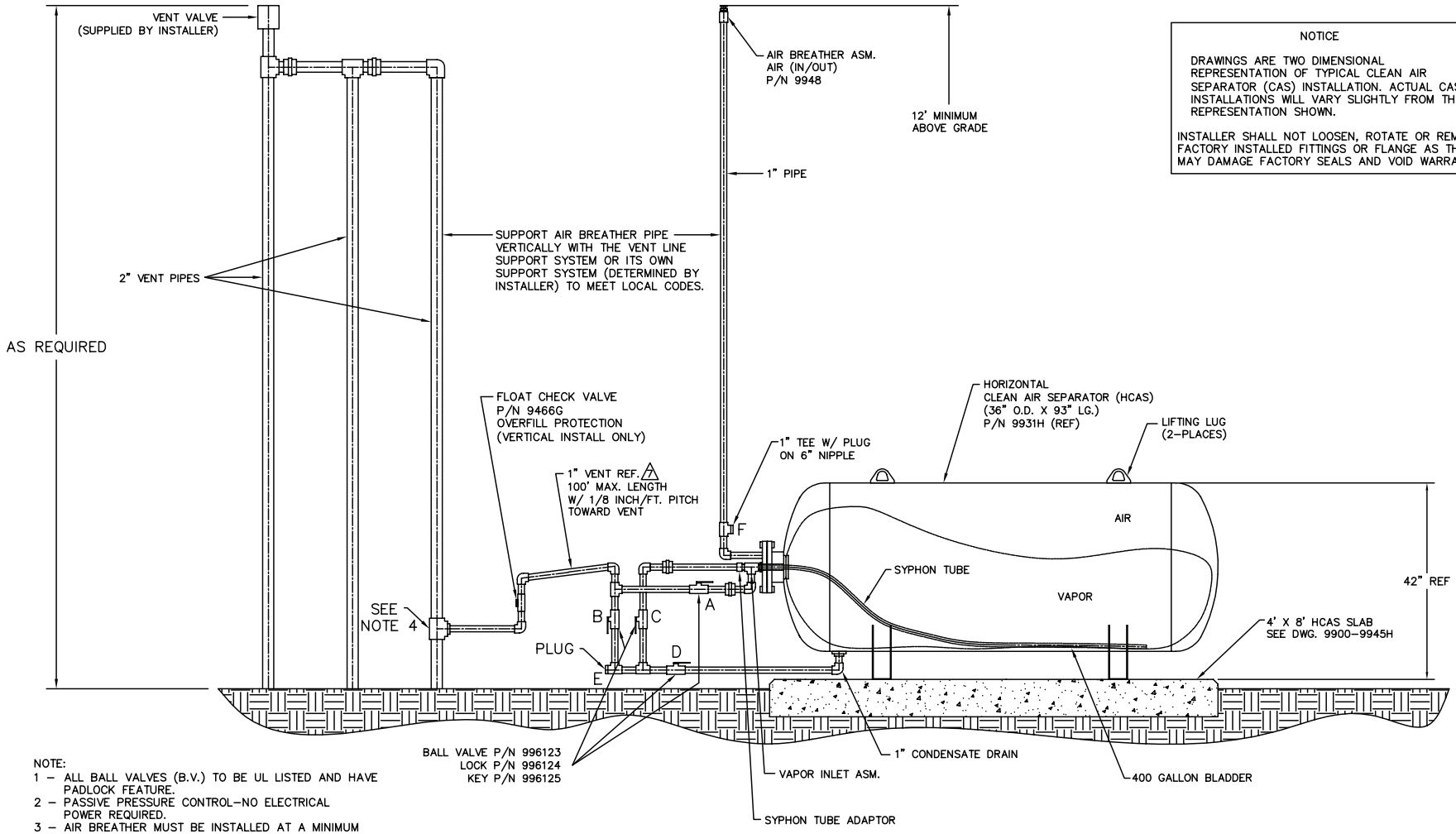


NOTICE

DRAWINGS ARE TWO DIMENSIONAL REPRESENTATION OF TYPICAL CLEAN AIR SEPARATOR (CAS) INSTALLATION. ACTUAL CAS INSTALLATIONS WILL VARY SLIGHTLY FROM THE REPRESENTATION SHOWN.

INSTALLER SHALL NOT LOOSEN, ROTATE OR REMOVE FACTORY INSTALLED FITTINGS OR FLANGE AS THIS MAY DAMAGE FACTORY SEALS AND VOID WARRANTY.

NOTE:
1 – ALL BALL VALVES (B.V.) TO BE UL LISTED AND HAVE PADLOCK FEATURE.
2 – PASSIVE PRESSURE CONTROL–NO ELECTRICAL POWER REQUIRED.
3 – AIR BREATHER MUST BE INSTALLED AT A MINIMUM HEIGHT OF 12' ABOVE GRADE ON 1" PIPE.
4 – VENT LINE TIE IN CAN BE INSTALLED ANYWHERE ALONG THE VENT STACK LINE PROVIDED THAT PIPE SLOPE IS MAINTAINED AND THE CHECK VALVE IS IN THE CORRECT VERTICAL INSTALLATION.
5 – ONLY GALVANIZED PIPE IS TO BE USED FOR PIPING CONNECTIONS
6 – HCAS TO SLOPE SLIGHTLY TOWARD CONDENSATE DRAIN. PITCH SLAB WITHIN 1/8 INCH/FOOT TOWARD CONDENSATE DRAIN END OR SHIM HCAS FOR PROPER VESSEL DRAINAGE.
7 – A FLEXIBLE CONNECTION BETWEEN THE CLEAN AIR SEPARATOR AND THE VENT LINE(S) IS ALLOWABLE IF REQUIRED BY THE LOCAL AUTHORITY HAVING JURISDICTION (AHJ) TO MEET SEISMIC REQUIREMENTS. SHOULD THE FLEX CONNECTION BE INSTALLED SUCH THAT IT IS NOT SUPPORTED, THE SLOPE OF THE FLEX CONNECTION SHALL BE GREATER THAN THE 1/8" PER FOOT SLOPE REQUIRED FOR THE REST OF THE ONE INCH GALVANIZED PIPING.

The information disclosed hereon includes proprietary rights of Franklin Fueling Systems, Inc. Neither this drawing nor the information disclosed thereon may be reproduced or transferred to other documents, or used or disclosed to others for any purpose, except as specifically authorized in writing by Franklin Fueling Systems. This drawing must be returned to Franklin Fueling Systems upon request.

MATERIAL:

DO NOT SCALE DRAWING

STANDARD INCH TOLERANCES (UNLESS OTHERWISE SPECIFIED): .XX ±.02, .XXX ±.005, ANGULAR ±1/2°

SPECIAL DIST:

| REV | DESCRIPTION | ECN NO | BY | DATE |
|---|---|---|---|---|
| 7 | ADDED NOTE 7 | 401666 | TF / MDB | 03/20/08 |

Franklin Fueling Systems
Madison, WI 53718

TITLE: CLEAN AIR SEPARATOR HORIZONTAL INSTALLATION

| DRAWN: | DATE: | DRW NO: | SUFFIX: |
|---|---|---|---|
| TF | 05/23/07 | 9900–9942 | H |
| APPRVL: MDB | DATE: 06/05/07 | SCALE: N.T.S. | SHEET 1 OF 1 |

DRW NO: 9900–9972

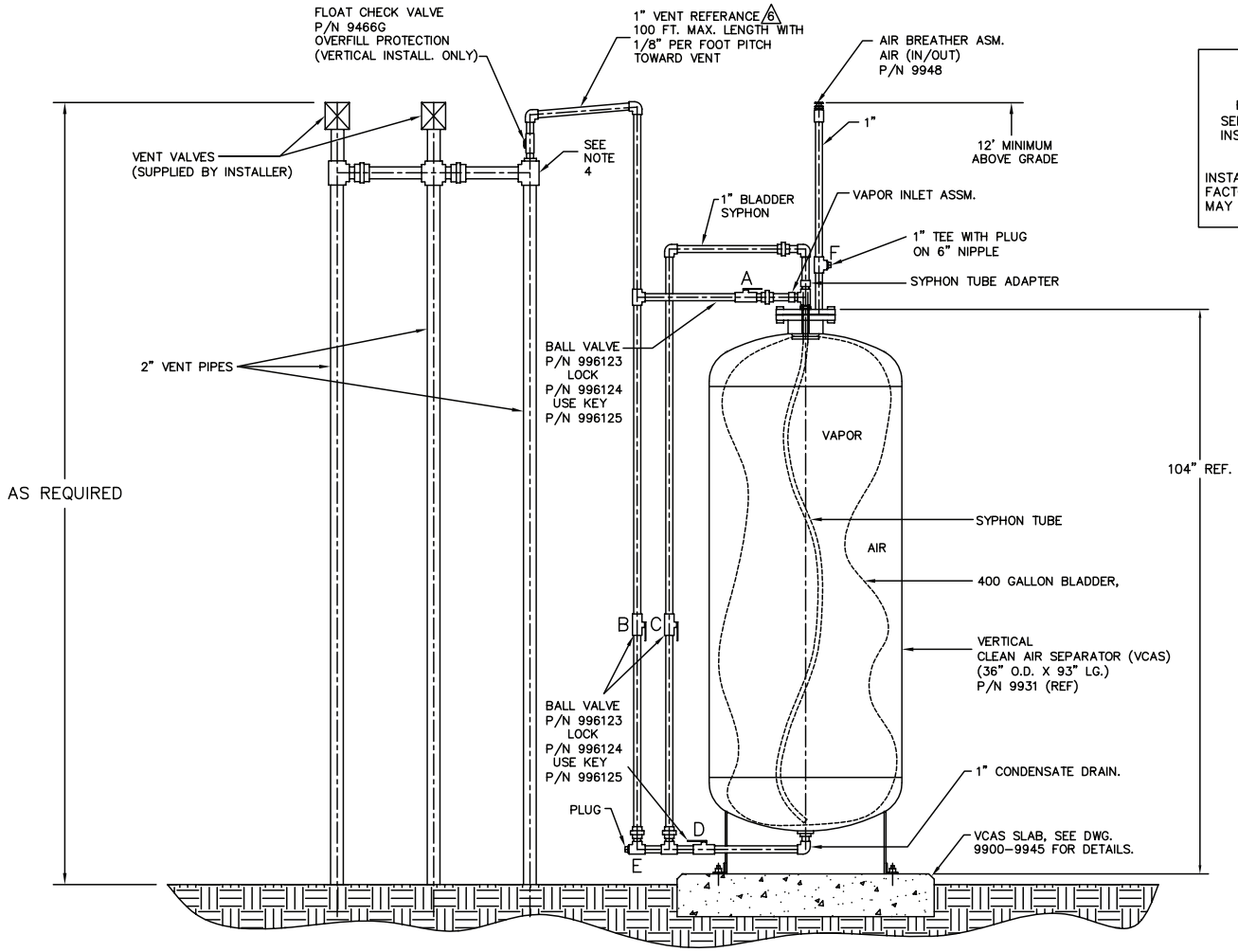


NOTICE

DRAWINGS ARE TWO DIMENSIONAL REPRESENTATION OF TYPICAL CLEAN AIR SEPARATOR (CAS) INSTALLATION. ACTUAL CAS INSTALLATIONS WILL VARY SLIGHTLY FROM THE REPRESENTATION SHOWN.

INSTALLER SHALL NOT LOOSEN, ROTATE OR REMOVE FACTORY INSTALLED FITTINGS OR FLANGE AS THIS MAY DAMAGE FACTORY SEALS AND VOID WARRANTY.

NOTE:
1 – ALL BALL VALVES (B.V.) TO BE UL LISTED AND HAVE PADLOCK FEATURE.
2 – PASSIVE PRESSURE CONTROL–NO ELECTRICAL POWER REQUIRED.
3 – AIR BREATHER MUST BE INSTALLED AT A MINIMUM HEIGHT OF 12' ABOVE GRADE.
4 – VENT LINE TIE IN CAN BE INSTALLED ANYWHERE ALONG THE VENT STACK LINE PROVIDED THAT PIPE SLOPE IS MAINTAINED AND THE CHECK VALVE IS IN THE CORRECT VERTICAL INSTALLATION.
5 – ONLY GALVANIZED PIPE IS TO BE USED FOR PIPING CONNECTIONS
6 – A FLEXIBLE CONNECTION BETWEEN THE CLEAN AIR SEPARATOR AND THE VENT LINE(S) IS ALLOWABLE IF REQUIRED BY THE LOCAL AUTHORITY HAVING JURISDICTION (AHJ) TO MEET SEISMIC REQUIREMENTS. SHOULD THE FLEX CONNECTION BE INSTALLED SUCH THAT IT IS NOT SUPPORTED, THE SLOPE OF THE FLEX CONNECTION SHALL BE GREATER THAN THE 1/8" PER FOOT SLOPE REQUIRED FOR THE REST OF THE ONE INCH GALVANIZED PIPING.

The information disclosed hereon includes proprietary rights of Franklin Fueling Systems, Inc. Neither this drawing nor the information disclosed thereon may be reproduced or transferred to other documents, or used or disclosed to others for any purpose, except as specifically authorized in writing by Franklin Fueling Systems. This drawing must be returned to Franklin Fueling Systems upon request.

MATERIAL:

DO NOT SCALE DRAWING

STANDARD INCH TOLERANCES (UNLESS OTHERWISE SPECIFIED): .XX ± .02, .XXX ± .005, ANGULAR ± 1/2°

SPECIAL DIST:

| REV | DESCRIPTION | ECN NO | BY | DATE |
|---|---|---|---|---|
| 8 | ADDED NOTE 6 | 401666 | TF/MDB | 03/20/08 |

Franklin Fueling Systems
Madison, WI 53718

TITLE: CLEAN AIR SEPARATOR VERTICAL INSTALLATION (2 VENT)

| DRAWN: | DATE: | DRW NO: | SUFFIX: |
|---|---|---|---|
| JWH | 05/14/02 | 9900–9972 | |
| APPRVL: MDB | DATE: 06/05/07 | ACAD HLY | SCALE: N.T.S. SHEET 1 OF 1 |

DRW NO: 9900–9971H

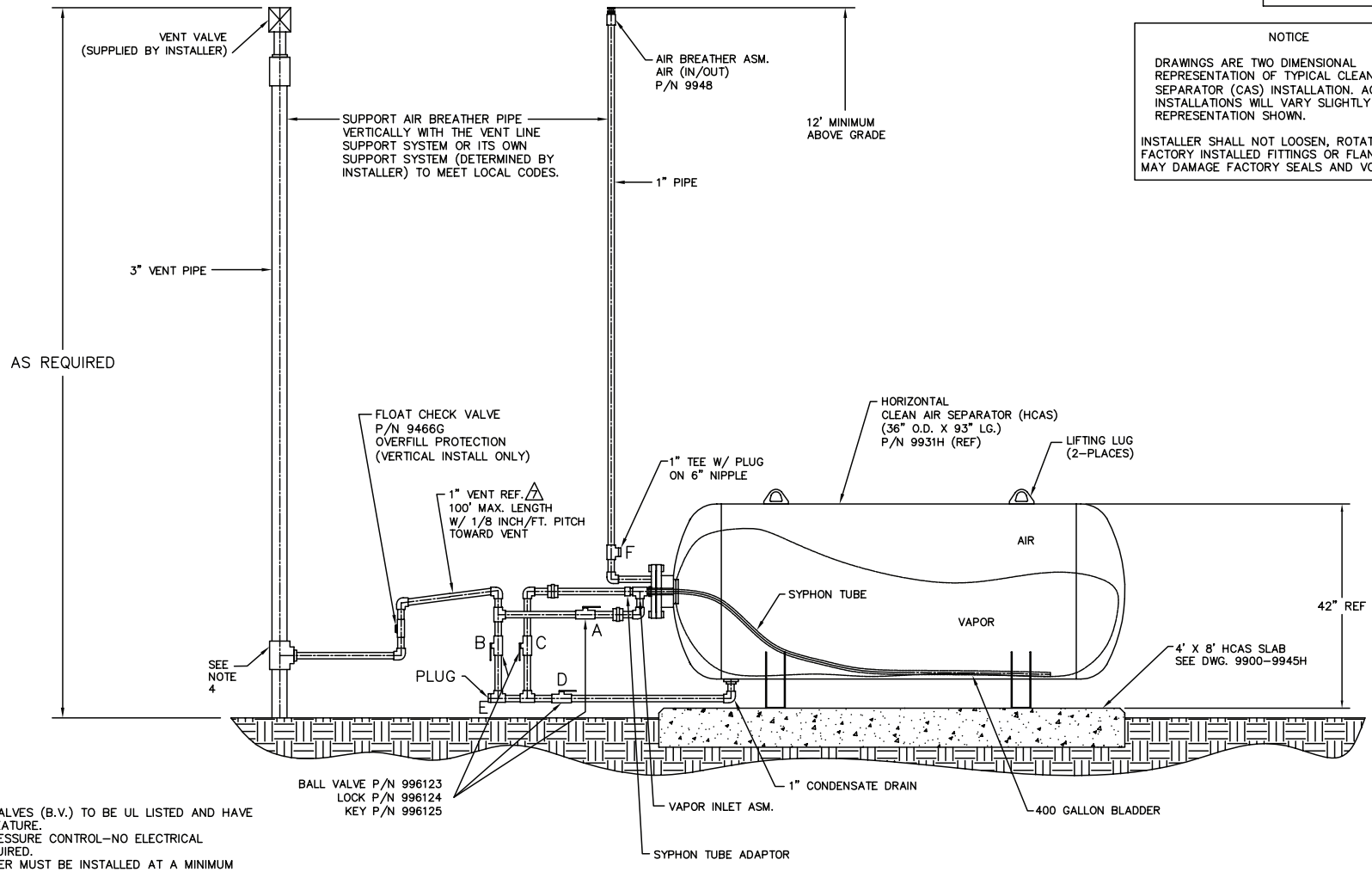


NOTICE

DRAWINGS ARE TWO DIMENSIONAL REPRESENTATION OF TYPICAL CLEAN AIR SEPARATOR (CAS) INSTALLATION. ACTUAL CAS INSTALLATIONS WILL VARY SLIGHTLY FROM THE REPRESENTATION SHOWN.

INSTALLER SHALL NOT LOOSEN, ROTATE OR REMOVE FACTORY INSTALLED FITTINGS OR FLANGE AS THIS MAY DAMAGE FACTORY SEALS AND VOID WARRANTY.

NOTE:

1 – ALL BALL VALVES (B.V.) TO BE UL LISTED AND HAVE PADLOCK FEATURE.
2 – PASSIVE PRESSURE CONTROL–NO ELECTRICAL POWER REQUIRED.
3 – AIR BREATHER MUST BE INSTALLED AT A MINIMUM HEIGHT OF 12' ABOVE GRADE ON 1" PIPE.
4 – VENT LINE TIE IN CAN BE INSTALLED ANYWHERE ALONG THE VENT STACK LINE PROVIDED THAT PIPE SLOPE IS MAINTAINED AND THE CHECK VALVE IS IN THE CORRECT VERTICAL INSTALLATION.
5 – ONLY GALVANIZED PIPE IS TO BE USED FOR PIPING CONNECTIONS
6 – HCAS TO SLOPE SLIGHTLY TOWARD CONDENSATE DRAIN. PITCH SLAB WITHIN 1/8 INCH/FOOT TOWARD CONDENSATE DRAIN END OR SHIM HCAS FOR PROPER VESSEL DRAINAGE.
7 – A FLEXIBLE CONNECTION BETWEEN THE CLEAN AIR SEPARATOR AND THE VENT LINE(S) IS ALLOWABLE IF REQUIRED BY THE LOCAL AUTHORITY HAVING JURISDICTION (AHJ) TO MEET SEISMIC REQUIREMENTS. SHOULD THE FLEX CONNECTION BE INSTALLED SUCH THAT IT IS NOT SUPPORTED, THE SLOPE OF THE FLEX CONNECTION SHALL BE GREATER THAN THE 1/8" PER FOOT SLOPE REQUIRED FOR THE REST OF THE ONE INCH GALVANIZED PIPING.

The information disclosed hereon includes proprietary rights of Franklin Fueling Systems, Inc. Neither this drawing nor the information disclosed thereon may be reproduced or transferred to other documents, or used or disclosed to others for any purpose, except as specifically authorized in writing by Franklin Fueling Systems. This drawing must be returned to Franklin Fueling Systems upon request.

MATERIAL:

DO NOT SCALE DRAWING

STANDARD INCH TOLERANCES (UNLESS OTHERWISE SPECIFIED): .XX ± .02, .XXX ± .005, ANGULAR ± 1/2°

SPECIAL DIST:

| REV | DESCRIPTION | ECN NO | BY | DATE |
|---|---|---|---|---|
| 7 | ADDED NOTE 7 | 401666 | TF / MDB | 03/20/08 |

Franklin Fueling Systems
Madison, WI 53718

TITLE: CLEAN AIR SEPARATOR HORIZONTAL INSTALLATION (1 VENT VALVE)

| DRAWN: | DATE: | DRW NO: | SUFFIX: |
|---|---|---|---|
| TF | 05/22/07 | 9900–9971 | H |
| APPRVL: MDB | DATE: 06/05/07 | SCALE: N.T.S. | SHEET 1 OF 1 |

DRW NO: 9900–9973

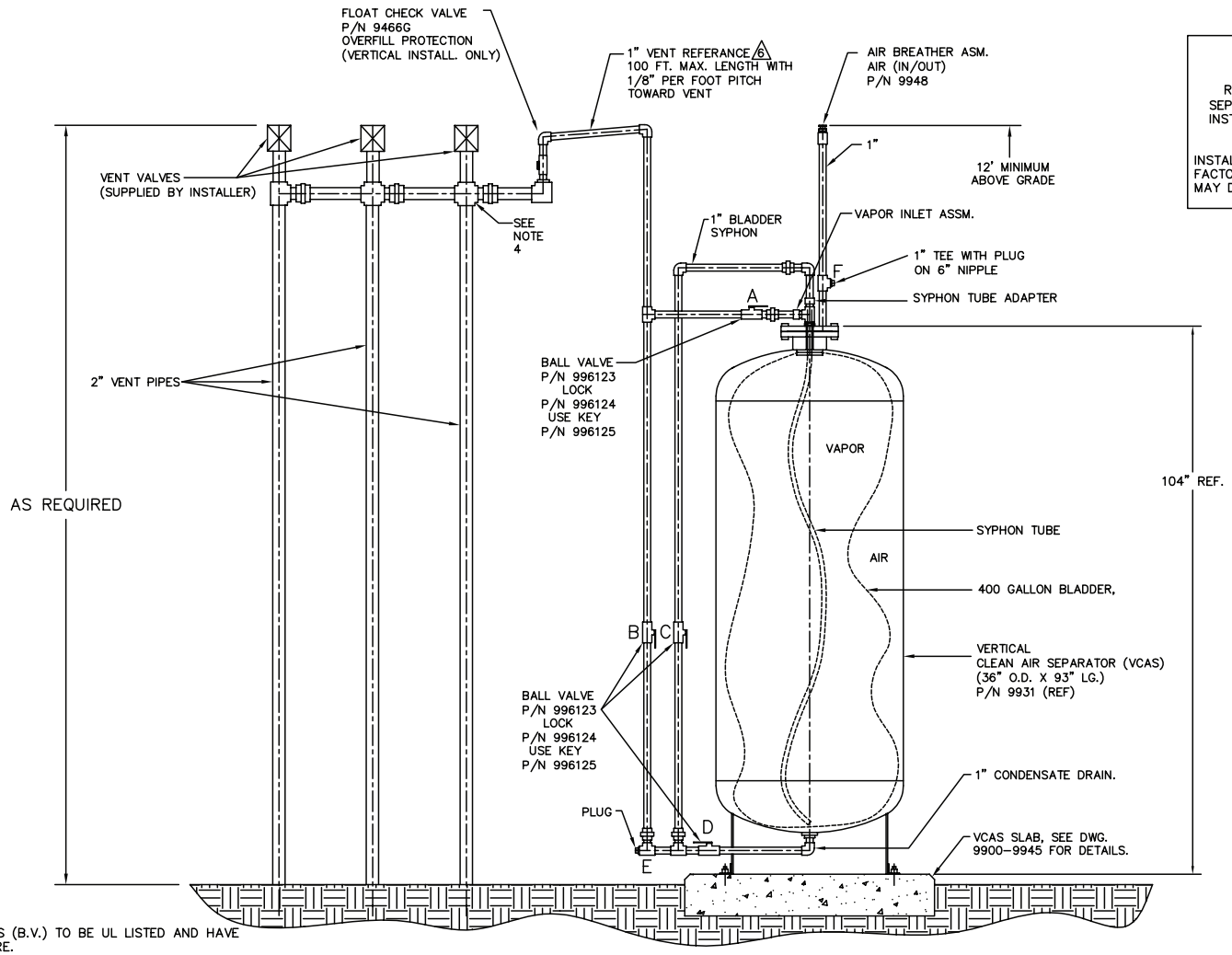


NOTICE

DRAWINGS ARE TWO DIMENSIONAL REPRESENTATION OF TYPICAL CLEAN AIR SEPARATOR (CAS) INSTALLATION. ACTUAL CAS INSTALLATIONS WILL VARY SLIGHTLY FROM THE REPRESENTATION SHOWN.

INSTALLER SHALL NOT LOOSEN, ROTATE OR REMOVE FACTORY INSTALLED FITTINGS OR FLANGE AS THIS MAY DAMAGE FACTORY SEALS AND VOID WARRANTY.

NOTE:
1 – ALL BALL VALVES (B.V.) TO BE UL LISTED AND HAVE PADLOCK FEATURE.
2 – PASSIVE PRESSURE CONTROL–NO ELECTRICAL POWER REQUIRED.
3 – AIR BREATHER MUST BE INSTALLED AT A MINIMUM HEIGHT OF 12' ABOVE GRADE.
4 – VENT LINE TIE IN CAN BE INSTALLED ANYWHERE ALONG THE VENT STACK LINE PROVIDED THAT PIPE SLOPE IS MAINTAINED AND THE CHECK VALVE IS IN THE CORRECT VERTICAL INSTALLATION.
5 – ONLY GALVANIZED PIPE IS TO BE USED FOR PIPING CONNECTION
6 – A FLEXIBLE CONNECTION BETWEEN THE CLEAN AIR SEPARATOR AND THE VENT LINE(S) IS ALLOWABLE IF REQUIRED BY THE LOCAL AUTHORITY HAVING JURISDICTION (AHJ) TO MEET SEISMIC REQUIREMENTS. SHOULD THE FLEX CONNECTION BE INSTALLED SUCH THAT IT IS NOT SUPPORTED, THE SLOPE OF THE FLEX CONNECTION SHALL BE GREATER THAN THE 1/8" PER FOOT SLOPE REQUIRED FOR THE REST OF THE ONE INCH GALVANIZED PIPING.

| REV | DESCRIPTION | ECN NO | BY | DATE |
|---|---|---|---|---|
| 8 | ADDED NOTE 6 | 401666 | TF/MDB | 03/20/08 |

The information disclosed hereon includes proprietary rights of Franklin Fueling Systems, Inc. Neither this drawing nor the information disclosed thereon may be reproduced or transferred to other documents, or used or disclosed to others for any purpose, except as specifically authorized in writing by Franklin Fueling Systems. This drawing must be returned to Franklin Fueling Systems upon request.

MATERIAL:

DO NOT SCALE DRAWING

STANDARD INCH TOLERANCES (UNLESS OTHERWISE SPECIFIED): .XX ± .02, .XXX ± .005, ANGULAR ± 1/2°

SPECIAL DIST:

Franklin Fueling Systems
Madison, WI 53718

TITLE: CLEAN AIR SEPARATOR VERTICAL INSTALLATION (3 VENT)

| DRAWN: JWH | DATE: 05/14/02 | DRW NO: 9900–9973 | SUFFIX: |
|---|---|---|---|
| APPRVL: MDB | DATE: 06/05/07 | ACAD HLY | SCALE: N.T.S. | SHEET 1 OF 1 |

DRW NO: 9900–9972H

NOTICE

DRAWINGS ARE TWO DIMENSIONAL REPRESENTATION OF TYPICAL CLEAN AIR SEPARATOR (CAS) INSTALLATION. ACTUAL CAS INSTALLATIONS WILL VARY SLIGHTLY FROM THE REPRESENTATION SHOWN.

INSTALLER SHALL NOT LOOSEN, ROTATE OR REMOVE FACTORY INSTALLED FITTINGS OR FLANGE AS THIS MAY DAMAGE FACTORY SEALS AND VOID WARRANTY.

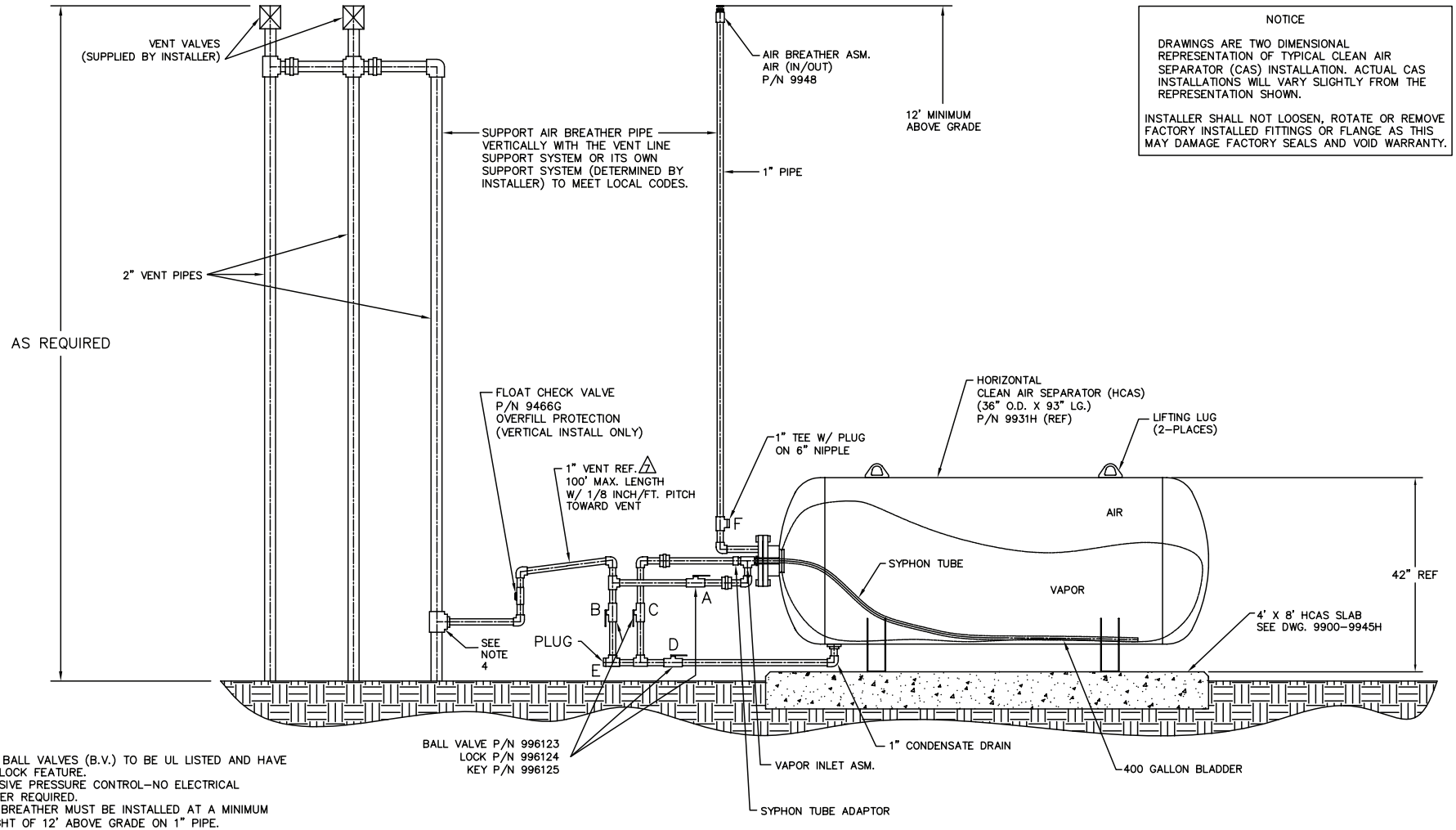


NOTE:
1 – ALL BALL VALVES (B.V.) TO BE UL LISTED AND HAVE PADLOCK FEATURE.
2 – PASSIVE PRESSURE CONTROL–NO ELECTRICAL POWER REQUIRED.
3 – AIR BREATHER MUST BE INSTALLED AT A MINIMUM HEIGHT OF 12' ABOVE GRADE ON 1" PIPE.
4 – VENT LINE TIE IN CAN BE INSTALLED ANYWHERE ALONG THE VENT STACK LINE PROVIDED THAT PIPE SLOPE IS MAINTAINED AND THE CHECK VALVE IS IN THE CORRECT VERTICAL INSTALLATION.
5 – ONLY GALVANIZED PIPE IS TO BE USED FOR PIPING CONNECTIONS.
6 – HCAS TO SLOPE SLIGHTLY TOWARD CONDENSATE DRAIN. PITCH SLAB WITHIN 1/8 INCH/FOOT TOWARD CONDENSATE DRAIN END OR SHIM HCAS FOR PROPER VESSEL DRAINAGE.
7 – A FLEXIBLE CONNECTION BETWEEN THE CLEAN AIR SEPARATOR AND THE VENT LINE(S) IS ALLOWABLE IF REQUIRED BY THE LOCAL AUTHORITY HAVING JURISDICTION (AHJ) TO MEET SEISMIC REQUIREMENTS. SHOULD THE FLEX CONNECTION BE INSTALLED SUCH THAT IT IS NOT SUPPORTED, THE SLOPE OF THE FLEX CONNECTION SHALL BE GREATER THAN THE 1/8" PER FOOT SLOPE REQUIRED FOR THE REST OF THE ONE INCH GALVANIZED PIPING.

| REV | DESCRIPTION | ECN NO | BY | DATE |
|---|---|---|---|---|
| 7 | ADDED NOTE 7 | 401666 | TF / MDB | 03/20/08 |

The information disclosed hereon includes proprietary rights of Franklin Fueling Systems, Inc. Neither this drawing nor the information disclosed thereon may be reproduced or transferred to other documents, or used or disclosed to others for any purpose, except as specifically authorized in writing by Franklin Fueling Systems. This drawing must be returned to Franklin Fueling Systems upon request.

MATERIAL:

DO NOT SCALE DRAWING

STANDARD INCH TOLERANCES (UNLESS OTHERWISE SPECIFIED): .XX ± .02, .XXX ± .005, ANGULAR ± 1/2°

SPECIAL DIST:

Franklin Fueling Systems
Madison, WI 53718

TITLE: CLEAN AIR SEPARATOR HORIZONTAL INSTALLATION (2 VENT VALVE)

| DRAWN: TF | DATE: 05/22/07 | DRW NO: 9900–9972 | SUFFIX: H |
|---|---|---|---|
| APPRVL: MDB | DATE: 06/05/07 | SCALE: N.T.S. | SHEET 1 OF 1 |

DRW NO: 9900–9973H

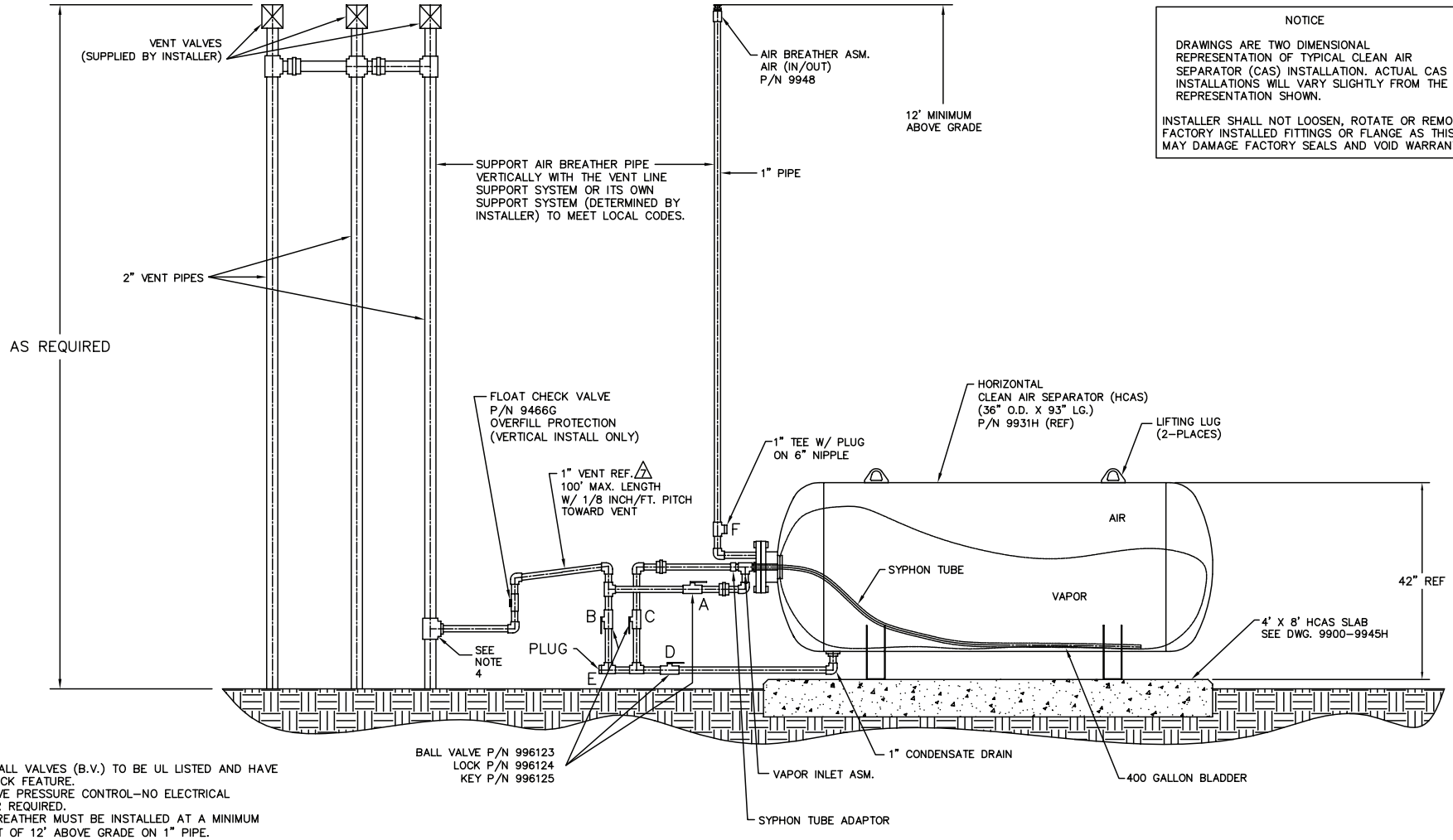


NOTICE

DRAWINGS ARE TWO DIMENSIONAL REPRESENTATION OF TYPICAL CLEAN AIR SEPARATOR (CAS) INSTALLATION. ACTUAL CAS INSTALLATIONS WILL VARY SLIGHTLY FROM THE REPRESENTATION SHOWN.

INSTALLER SHALL NOT LOOSEN, ROTATE OR REMOVE FACTORY INSTALLED FITTINGS OR FLANGE AS THIS MAY DAMAGE FACTORY SEALS AND VOID WARRANTY.

NOTE:
1 – ALL BALL VALVES (B.V.) TO BE UL LISTED AND HAVE PADLOCK FEATURE.
2 – PASSIVE PRESSURE CONTROL–NO ELECTRICAL POWER REQUIRED.
3 – AIR BREATHER MUST BE INSTALLED AT A MINIMUM HEIGHT OF 12' ABOVE GRADE ON 1" PIPE.
4 – VENT LINE TIE IN CAN BE INSTALLED ANYWHERE ALONG THE VENT STACK LINE PROVIDED THAT PIPE SLOPE IS MAINTAINED AND THE CHECK VALVE IS IN THE CORRECT VERTICAL INSTALLATION.
5 – ONLY GALVANIZED PIPE IS TO BE USED FOR PIPING CONNECTIONS
6 – HCAS TO SLOPE SLIGHTLY TOWARD CONDENSATE DRAIN. PITCH SLAB WITHIN 1/8 INCH/FOOT TOWARD CONDENSATE DRAIN END OR SHIM HCAS FOR PROPER VESSEL DRAINAGE.
7 – A FLEXIBLE CONNECTION BETWEEN THE CLEAN AIR SEPARATOR AND THE VENT LINE(S) IS ALLOWABLE IF REQUIRED BY THE LOCAL AUTHORITY HAVING JURISDICTION (AHJ) TO MEET SEISMIC REQUIREMENTS. SHOULD THE FLEX CONNECTION BE INSTALLED SUCH THAT IT IS NOT SUPPORTED, THE SLOPE OF THE FLEX CONNECTION SHALL BE GREATER THAN THE 1/8" PER FOOT SLOPE REQUIRED FOR THE REST OF THE ONE INCH GALVANIZED PIPING.

The information disclosed hereon includes proprietary rights of Franklin Fueling Systems, Inc. Neither this drawing nor the information disclosed thereon may be reproduced or transferred to other documents, or used or disclosed to others for any purpose, except as specifically authorized in writing by Franklin Fueling Systems. This drawing must be returned to Franklin Fueling Systems upon request.

MATERIAL:

DO NOT SCALE DRAWING

STANDARD INCH TOLERANCES (UNLESS OTHERWISE SPECIFIED): .XX ±.02, .XXX ±.005, ANGULAR ±1/2°

SPECIAL DIST:

| REV | DESCRIPTION | ECN NO | BY | DATE |
|---|---|---|---|---|
| 7 | ADDED NOTE 7 | 401666 | TF / MDB | 03/20/08 |

Franklin Fueling Systems
Madison, WI 53718

TITLE: CLEAN AIR SEPARATOR HORIZONTAL INSTALLATION (3 VENT VALVE)

| DRAWN: | DATE: | DRW NO: | SUFFIX: |
|---|---|---|---|
| TF | 05/22/07 | 9900–9973 | H |
| APPRVL: MDB | DATE: 06/05/07 | SCALE: N.T.S. | SHEET 1 OF 1 |

# Healy Model 75 Series Inverted Coaxial Hoses

## 1.0 Healy Model No. 75 Series Coaxial Hose

Healy 75 Series Hoses and Hose Assemblies should be serviced by a Healy Certified Technician. However, GDF Owner / Operator can remove and install hanging hardware (nozzle, curb hose, breakaway, flow limiter and whip hose). Hoses should be inspected for kinks, flat spots, abraded outer cover (wire strands visible) and leaking fittings on a weekly basis.

**Note: The following procedures shall be conducted after installation or repair, with the dispenser authorized and ready to dispense fuel.**

## 1.1 Field Serviceable Hose Components

1.1.1 Healy Part No. HB-2 O-ring (Item 1, in Figure below). This o-ring seals the fitting to the nozzle and the adaptor. Liquid gasoline visible on the hose indicates a damaged or improperly installed HB-2 o-ring. Replace the o-ring, if necessary.

1.1.2 Healy Part No. HB-4 Quad Seals (Item 2, in Figure below). These quad seals are used on the end of the hose that attaches to the breakaway assembly (or flow limiter, if equipped). If the symptom is meter creep (gallons dispensed display on dispenser is counting up when the nozzle is not dispensing gasoline), check the HB-4 quad seals at the breakaway (or flow limiter, if equipped) end of the hose for cuts or damage. Replace the seals, if necessary.

1.1.3 Healy Part No. 291 O-ring (Item 3, in Figure below). These o-ring seals are used on the end of the hose that attaches to the nozzle or hose adaptor assembly. If the symptom is meter creep (gallons dispensed display on dispenser is counting up when the nozzle is not dispensing gasoline), check the 291 o-rings at the nozzle or adaptor end of the hose for cuts or damage. Replace the seals, if necessary.

Lubricate any o-ring or Quad Seal before installing the hose assembly into an adaptor, breakaway or nozzle assembly to make it easier to install and prevent the seal from getting cut. Motor oil (any weight) is acceptable for lubricating an o-ring or Quad Seal.

*Rule of Thumb:* *O-rings to Nozzle and Hose Adaptor*
*Quad Seals to Breakaway (or Flow Limiter)*

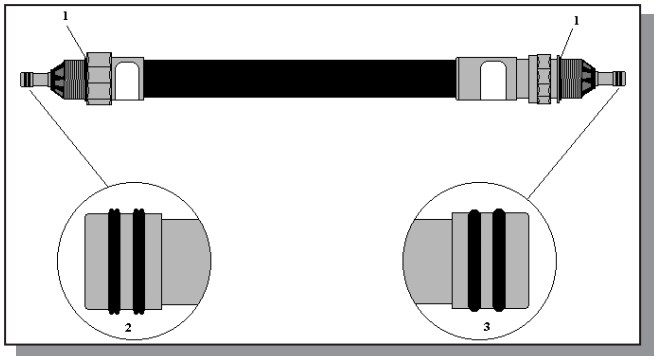

## 1.2 Healy Model No. 75B Series Coaxial Hose Breakaway

**HEALY STAGE II VAPOR RECOVERY**
**PART NO. 8701VV BREAKAWAY (HOSE BREAK)**
**ASSEMBLY & INSTALLATION INSTRUCTIONS**

- The Healy Breakaway is delivered loosely assembled. Handle carefully to avoid dropping and/or losing the precision parts.
- Failure to remove the Shear screw (Item 1) as described in Step 1 below could result in fracturing or shearing of the screw The Shear screw will require replacement if damaged.
- Be sure to assemble parts in the exact sequence as shown below.
- Be sure to lubricate all o–rings and quad seals where indicated. Use of ordinary motor oil is sufficient.
- Do not use thread–sealing compounds on straight threads.

**ASSEMBLY INSTRUCTIONS**
(refer to diagram at right)

1. Remove the Shear Screw (Item 1) and the packing materials. Separate the halves of the breakaway assembly, retaining the loose internal valves, (Items 2 & 3) and the spring (Item 13) inside the upper half.

2. Select the pigtail, (whip hose) assembly. Lubricate the quad and o–ring seals (Items 4, 5, 8, & straight thread, Item 6). Assemble the pigtail to the input half of the Breakaway (Item 7) being sure that the larger end of the conical spring is centered in the groove on the white valve. Tighten hose to Breakaway at 35 to 70 foot pounds. Be sure the vapor tube fitting slides easily into item 2 before final tightening.

3. Select the delivery hose, lubricate the o–ring (Item 4), the quad seal (Item 5) and straight thread (Item 6). Assemble the end with the quad seal to the output half of the Breakaway (Item 10), install the secondary hose and tighten to 35 to 70 foot pounds. Be sure the vapor tube fitting slides easily into item 3 before final tightening.

4. Carefully fit both halves of the Breakaway together. Utlizing the alignment pin, fully compress both halves and insert the Shear Screw (Item 1) and hand tighten. Final tighten to 20 inch pounds. Tools should not be necessary to initially start the screws.

| ITEM NO. | QTY | DWG NO. | DESCRIPTION | P/N |
|---|---|---|---|---|
| 14 | 2 | 1–117 | O–RING, PRECISION #9727 | 708 |
| 13 | 1 | A8701–752 | SPRING, CONICAL | 752 |
| 12 | 1 | 1–122 | O–RING, PRECISION #9727 | 709 |
| 11 | 2 | 78–312 | O–RING, PRECISION #9727 | 75414 |
| 10 | 1 | C8701–750–2 | BODY, NOZZLE END | 750–2 |
| 8 | 2 | 1–012 | O–RING, PRECISION #5747 | 291 |
| 7 | 1 | C8701–749 | BODY, DISPENSER END | 749 |
| 6 | 2 | | HOSE FITTING | |
| 5 | 4 | 4012 | QUAD–RING 514GJ | HB4 |
| 4 | 4 | 1–025 | O–RING, PRECISION #5747 | HB2 |
| 3 | 1 | B8701–791 | VALVE, NOZZLE END | 791 |
| 2 | 1 | B8701–748 | VALVE, DISPENSING END | 748 |
| 1 | 2 | B8701–716 | SHEAR, SCR. | 787 |

LIST OF MATERIAL

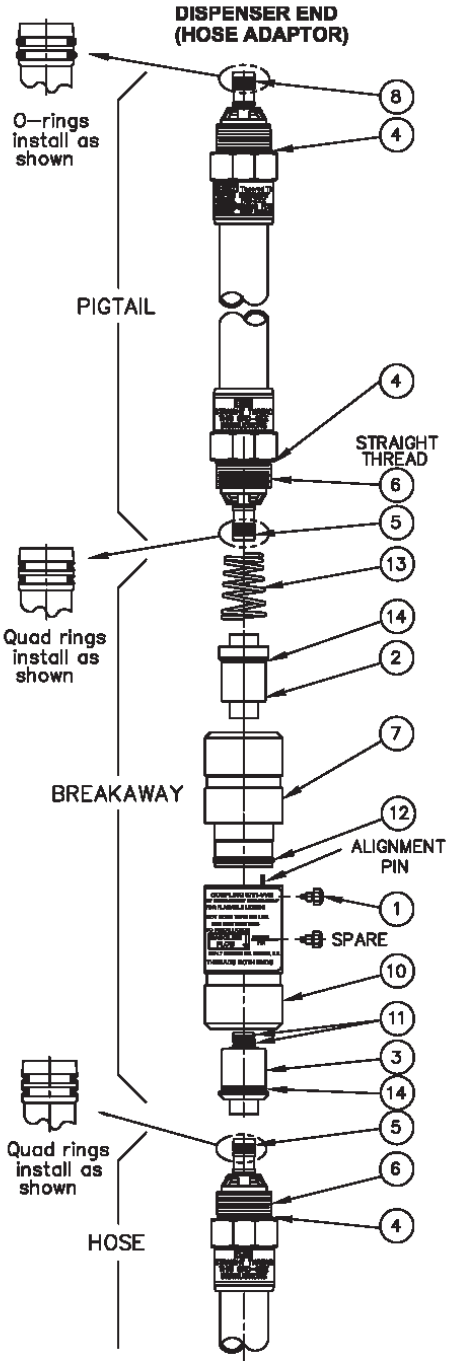


**PRODUCT-TO NOZZLE-END**

## 1.2.1 Assembly and Installation Instructions

### 1.2.1.1 UL-Required Notice

Underwriters Laboratories, Inc. (UL) requires that the installer of this product insure, before connecting this breakaway, that no damage will occur to the hose or dispenser before valve separation. The installer must test to be certain the dispenser is securely bolted to the dispensing island by using a procedure similar to that shown to the right and described below.

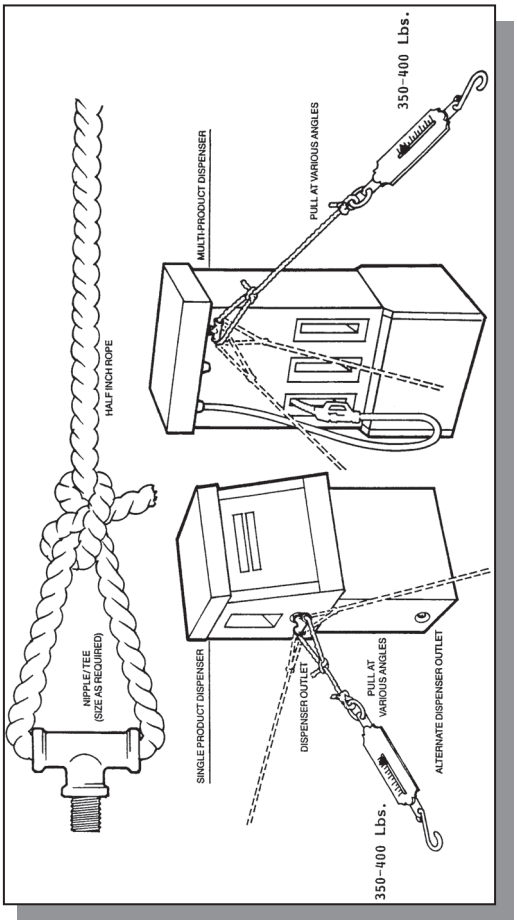


### 1.2.1.2 Pull Force Test

Attach a one-half inch diameter rope to the dispenser using a nipple/tee combination.
Before charging the dispenser with the product or with electrical power, attach the rope with a spring scale to the dispenser's product outlet.

Pull on the rope/scale with a gradual force up to 350 pounds. Observe the dispenser to assure there is no movement.

Perform this test from several different angles, being sure the dispenser is secure during each test.

After completion of testing, remove the rope and hardware to finish installation of the Healy hose and breakaway assembly.

# Healy Model CX6 Series Hose Adaptors

The Healy CX6-A is a cast aluminum adaptor fitting which is used to adapt a gasoline dispenser (pump) to accept a Healy Phase (Stage) II inverted coaxial vapor recovery hose. Only a Healy Certified Technician shall perform installation, maintenance and repair of model CX6 series hose adapters.

**Before Installation:**

- Read these instructions before installing the adaptor.
- Close crash (shear) valves in the dispenser and make sure electrical is shut off and locked out.

**Tools Required:**

- 15” adjustable wrench
- 1-1/2” open end wrench
- UL listed pipe sealant
- Torque wrench

**Caution:**

The adaptor has 1” female pipe thread on one end (to be attached to the dispenser product outlet via a 1” male pipe thread fitting) and 1-1/4-18 female straight thread on the other (for attachment of the Healy coaxial hose).

**Installation:**

- Apply pipe sealant to the 1” male pipe thread end of the piping fitting to be installed to the adaptor and attach to the 1” female pipe thread end of the adaptor.
- Apply pipe sealant to the other male pipe thread end of the pipe fitting to be installed to the dispenser outlet and install assembly to the dispenser.
- Tighten adapter and pipe fitting assembly into dispenser outlet to 80 foot pounds.
- Select the Healy coaxial hose for assembly to adapter outlet and connect per hose instructions.

# Healy Model 8701VV Breakaway

**HEALY STAGE II VAPOR RECOVERY**
**PART NO. 8701VV BREAKAWAY (HOSE BREAK)**
**ASSEMBLY & INSTALLATION INSTRUCTIONS**

- The Healy Breakaway is delivered loosely assembled. Handle carefully to avoid dropping and/or losing the precision parts.
- Failure to remove the Shear screw (Item 1) as described in Step 1 below could result in fracturing or shearing of the screw The Shear screw will require replacement if damaged.
- Be sure to assemble parts in the exact sequence as shown below.
- Be sure to lubricate all o–rings and quad seals where indicated. Use of ordinary motor oil is sufficient.
- Do not use thread–sealing compounds on straight threads.

## ASSEMBLY INSTRUCTIONS
(refer to diagram at right)

1. Remove the Shear Screw (Item 1) and the packing materials. Separate the halves of the breakaway assembly, retaining the loose internal valves, (Items 2 & 3) and the spring (Item 13) inside the upper half.
2. Select the pigtail, (whip hose) assembly. Lubricate the quad and o–ring seals (Items 4, 5, 8, & straight thread, Item 6). Assemble the pigtail to the input half of the Breakaway (Item 7) being sure that the larger end of the conical spring is centered in the groove on the white valve. Tighten hose to Breakaway at 35 to 70 foot pounds. Be sure the vapor tube fitting slides easily into item 2 before final tightening.
3. Select the delivery hose, lubricate the o–ring (Item 4), the quad seal (Item 5) and straight thread (Item 6). Assemble the end with the quad seal to the output half of the Breakaway (Item 10), install the secondary hose and tighten to 35 to 70 foot pounds. Be sure the vapor tube fitting slides easily into item 3 before final tightening.
4. Carefully fit both halves of the Breakaway together. Utlizing the alignment pin, fully compress both halves and insert the Shear Screw (Item 1) and hand tighten. Final tighten to 20 inch pounds. Tools should not be necessary to initially start the screws.

| ITEM NO. | QTY | DWG NO. | DESCRIPTION | P/N |
|---|---|---|---|---|
| 14 | 2 | 1–117 | O–RING, PRECISION #9727 | 708 |
| 13 | 1 | A8701–752 | SPRING, CONICAL | 752 |
| 12 | 1 | 1–122 | O–RING, PRECISION #9727 | 709 |
| 11 | 2 | 78–312 | O–RING, PRECISION #9727 | 75414 |
| 10 | 1 | C8701–750–2 | BODY, NOZZLE END | 750–2 |
| 8 | 2 | 1–012 | O–RING, PRECISION #5747 | 291 |
| 7 | 1 | C8701–749 | BODY, DISPENSER END | 749 |
| 6 | 2 | | HOSE FITTING | |
| 5 | 4 | 4012 | QUAD–RING 514GJ | HB4 |
| 4 | 4 | 1–025 | O–RING, PRECISION #5747 | HB2 |
| 3 | 1 | B8701–791 | VALVE, NOZZLE END | 791 |
| 2 | 1 | B8701–748 | VALVE, DISPENSING END | 748 |
| 1 | 2 | B8701–716 | SHEAR, SCR. | 787 |

LIST OF MATERIAL

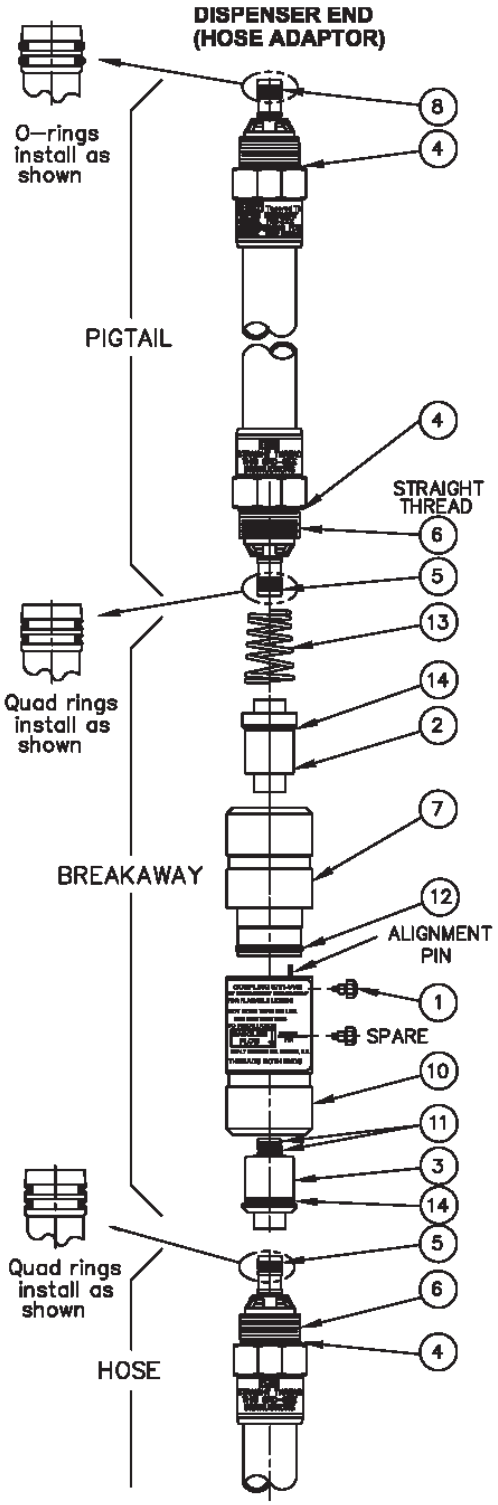


**PRODUCT-TO NOZZLE-END**

# DRIVE-OFF BREAKAWAY RECONNECTION PROCEDURE

Use this procedure to either reconnect or disconnect (reverse order) the Healy 8701VV Breakaway as part of Section 1.4 Procedure for Reconnecting Breakaway and Testing Fueling Point after Drive-Off in the Healy Systems Scheduled Maintenance.

**Note: Breakaway Reconnections must be logged in the GDF Maintenance Log.**

TOOLS NEEDED:

- Healy Breakaway Reconnection Clamp, Part No. 795
- 8mm Hex Head Socket
- Torque wrench
- Safety glasses

RECONNECTION PROCEDURE

1. Inspect each half of the separated breakaway for obvious damage to the outer-shell, plastic inserts or o-rings; including cracks, chips or tears that may effect reconnecting the two halves.

2. Check the shear pin bushing hole (see Figure 2) located in the top half of the breakaway for any part of the pin left behind at separation. A gentle tap on the opposite side of the breakaway should eject the pin.

3. After completing inspection, lightly lubricate the main o-ring on the top half of the breakaway. Any weight motor oil is acceptable.

4. Slide the top clamp of the Breakaway Reconnection Clamp onto the two flat surfaces on the top half of the breakaway (See Figure 1) installed on the dispenser (attached to whip hose).

5. Slide the separated bottom half of the breakaway (with hose and nozzle attached) onto the bottom clamp of the Breakaway Reconnection Clamp and begin squeezing the grip to slowly bring the two halves together. Check the main o-ring for position as the top and bottom of the breakaway come together.

6. Align the dowel pin in the bottom half of the breakaway with the dowel pin guide located in the top half of the breakaway. When dowel pin and guide are aligned, continue squeezing tool grip until the breakaway halves join together.

   **Caution:** Reconnection can cause a small amount of gasoline to leak out of the breakaway. A towel wrapped loosely around the breakaway can help to minimize fuel spills.

7. Remove the shear pin (#787) located in the spare shear pin location of the breakaway and install in place of the original.

8. Torque the shear pin to 20 inch-pounds (~ 1.5 ft-lbs). **DO NOT OVER-TIGHTEN**.

9. If available, install a shear pin (#787) in the spare shear pin location.

10. Remove the Breakaway Reconnection Clamp.

11. Proceed with the tests outlined in Section 1.4 of the Healy Systems Scheduled Maintenance.

**Figure 1**

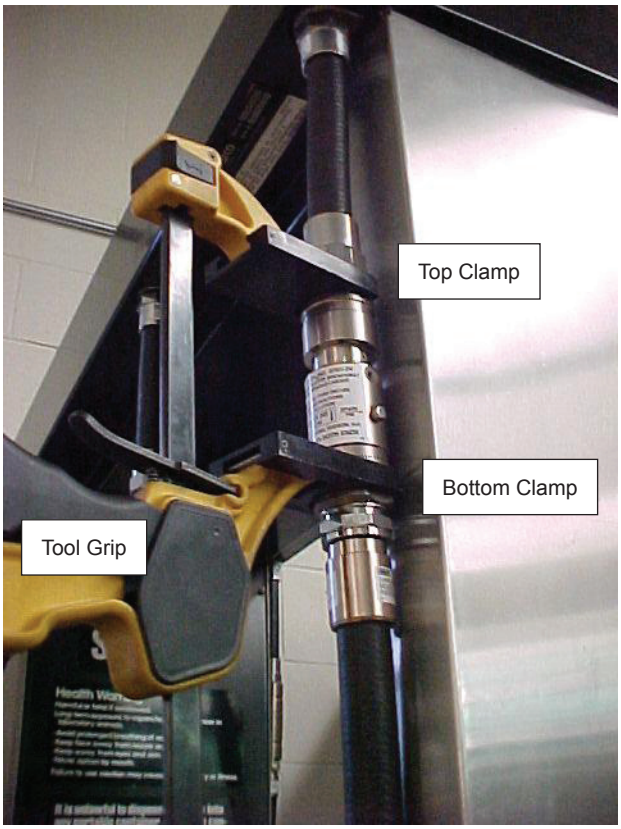


**Figure 2**

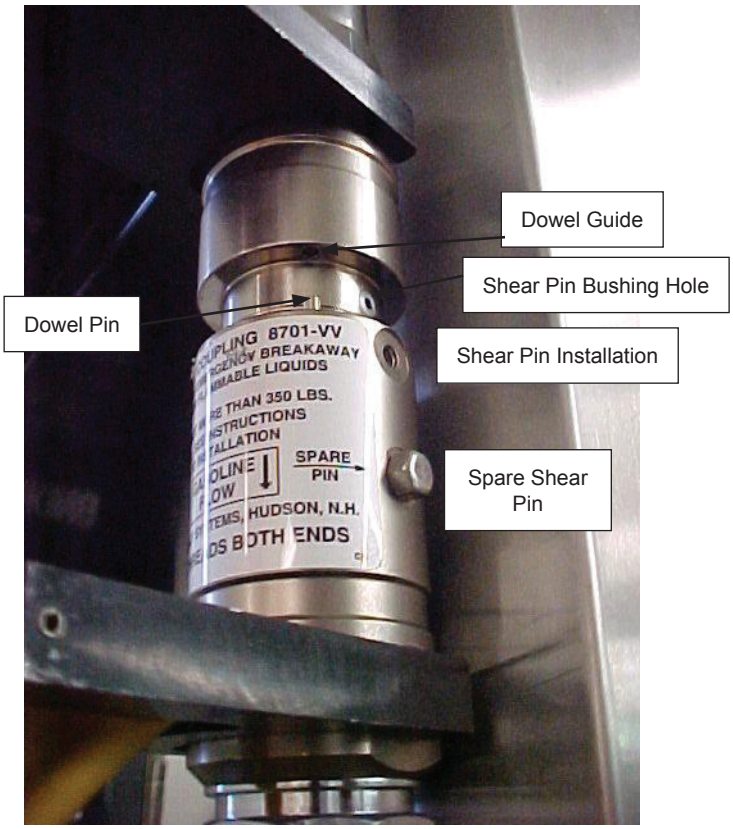

# Healy Model 807 Swivel Breakaway

**IMPORTANT: This sheet must be left with service station manager.**

**HEALY STAGE II VAPOR RECOVERY MODEL 807 SWIVEL BREAKAWAY (HOSE BREAK) ASSEMBLY & INSTALLATION INSTRUCTIONS**

- The Healy Swivel Breakaway is delivered loosely assembled. Handle carefully to avoid dropping and/or losing the precision parts.
- Failure to remove the Shear screw (Item 9) as described in Step 1 below could result in fracturing or shearing of the screw The Shear screw will require replacement if damaged.
- Be sure to assemble parts in the exact sequence as shown below.
- Be sure to lubricate all o–rings and quad seals where indicated. Use of ordinary motor oil is sufficient.
- Do not use thread–sealing compounds on straight threads.
- This Breakaway shall be installed between the product hose and the nozzle end (threaded onto nozzle).

**ASSEMBLY INSTRUCTIONS**
(refer to diagram at right)

1. Remove the Shear Screw (Item 9) and the packing materials. Separate the halves of the breakaway assembly, retaining the loose internal valve, (Item 6) and the spring (Item 11) inside the halves.
2. Install the male threaded half of the 807 into the Healy Nozzle. Lubricate the o–ring seals (Items 17 & 21 and tighten to 35 to 70 foot pounds. Be sure the vapor tube fitting slides easily into the nozzle before final tightening.
3. Select the delivery hose, lubricate the o–ring seals and straight thread. Assemble the non–swivel end of the Breakaway on the hose. Tighten to 35 to 70 foot pounds. Be sure the valve and spring (items 6 & 11) are in place before final tightening.
4. Carefully fit both halves of the Breakaway together. Utlizing the alignment pin, fully compress both halves and insert the Shear Screw (Item 9) and hand tighten. Final tighten to 20 inch pounds. Tools should not be necessary to initially start the screws.

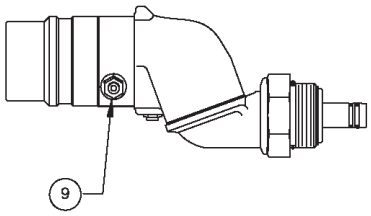


**NOTE:** SHEAR SCREW INSTALLS 45° FROM SPARE.

**NOZZLE END**

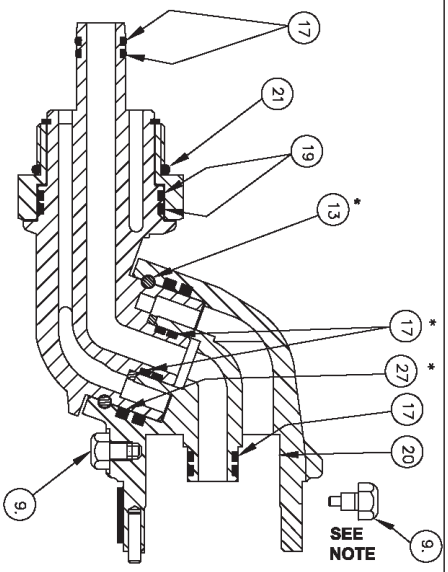


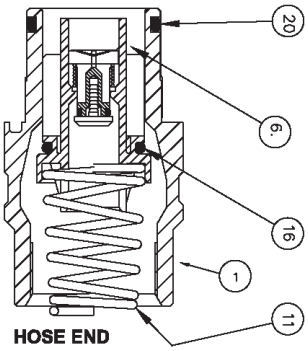


**HOSE END**

* NOT FIELD REPLACEABLE

| ITEM NO. | QTY | DWG NO. | DESCRIPTION | P/N |
|---|---|---|---|---|
| * 27 | 2 | 4125–514GJ | QUAD RING, MINNISOTA RUBBER | 80727 |
| 21 | 1 | 1–025 | O–RING, PRECISION #5747 | HB–2 |
| 20 | 1 | 1–122 | O–RING, PRECISION #9727 | 709 |
| 19 | 2 | 1–024 | O–RING, PRECISION #5747 | MPD–5 |
| 18 | 1 | 1–117 | O–RING, PRECISION #9727 | 708 |
| * 17 | 6 | 1–012 | O–RING, PRECISION #5747 | 75414 |
| 16 | 1 | 1–009 | O–RING, PRECISION #9727 | 753 |
| 11 | 1 | A8701–752 | SPRING, CONICAL | 752 |
| 9 | 2 | BB701–787 | SCREW, SHEAR | 787–1 |
| 6 | 1 | A8701–748 | VALVE, DISPENSING END | 748 |
| 4 | 1 | BB701–810 | BUSHING | 810 |
| 2 | 1 | CB701–805 | SWIVEL, FEMALE, (MACHINED) | 805 |
| 1 | 1 | CB701–809 | BODY, DISPENSER END | 809 |

LIST OF MATERIAL

**HEALY SYSTEMS, INC.**
18 Hampshire Drive * Hudson, New Hampshire 03051
(603) 882–2472 Telephone* (603) 882–5189 FAX

**healy**
**... the SMART Stage II solution**

**A8701-807-INST-M**
11/15/06 REV. M

## DRIVE-OFF BREAKAWAY RECONNECTION PROCEDURE

Use this procedure to either reconnect or disconnect (reverse order) the Healy 807 Swivel Breakaway as part of Section 1.4 Procedure for Reconnecting Breakaway and Testing Fueling Point after Drive-Off in the Healy Systems Scheduled Maintenance.

TOOLS NEEDED:

- Healy Breakaway Reconnection Clamp, Part No. 795
- 8mm Hex Head Socket
- Torque wrench
- Safety glasses

1. Inspect each half of the separated breakaway for obvious damage to the outer-shell, plastic insert or o-rings; including cracks, chips or tears that may effect reconnecting the two halves.

2. Check the shear pin bushing hole (see Figure 3) located in the half of the breakaway attached to the hose for any part of the pin left behind at separation. A gentle tap on the opposite side of the breakaway should eject the pin.

3. After completing inspection, lightly lubricate the main o-ring on the half of the breakaway that's attached to the hose and the two small o-rings inside the half of the breakaway attached to the nozzle. Any weight motor oil is acceptable.

4. Remove the black handle cover from the nozzle (See Figure 1).

5. Slide the top clamp of the Breakaway Reconnection Clamp above the two flat surfaces on the nozzle (See Figure 2).

6. Slide the half of the breakaway that's attached to the hose onto the bottom clamp of the Breakaway Reconnection Clamp and begin squeezing the grip to slowly bring the two halves together. Check the main o-ring for position as the top and bottom of the breakaway join together (See Figure 2).

7. Align the dowel pin in the top half of the breakaway with the dowel pin guide located in the bottom half of the breakaway (See Figure 3). When dowel pin and guide are aligned, continue squeezing tool grip until the breakaway halves come together (See Figure 4).

   Caution: Reconnection can cause a small amount of gasoline to leak out of the breakaway. A towel wrapped loosely around the breakaway can help to minimize fuel spills.

7. Remove the shear pin (#787-1) located in the spare shear pin location of the breakaway and install in place of the original.

8. Torque the shear pin to 20 inch-pounds (~ 1.5 ft-lbs). **DO NOT OVER-TIGHTEN**.

9. If available, install a shear pin (#787-1) in the spare shear pin location.

10. Remove the Breakaway Reconnection Clamp.

11. Proceed with the tests outlined in Section 1.4 of the Healy Systems Scheduled Maintenance.

**Figure 1**

**Figure 2**

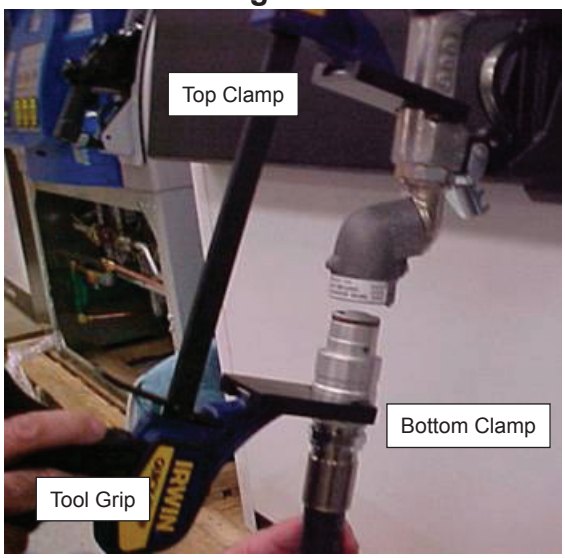


**Figure 3**

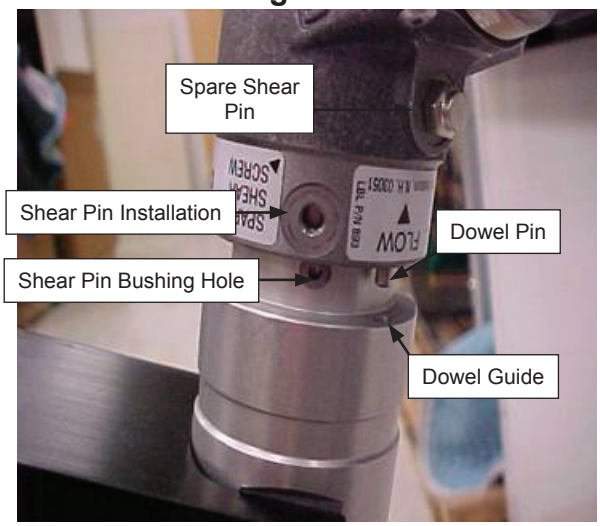


**Figure 4**

## Healy 1301 Flow Limiter

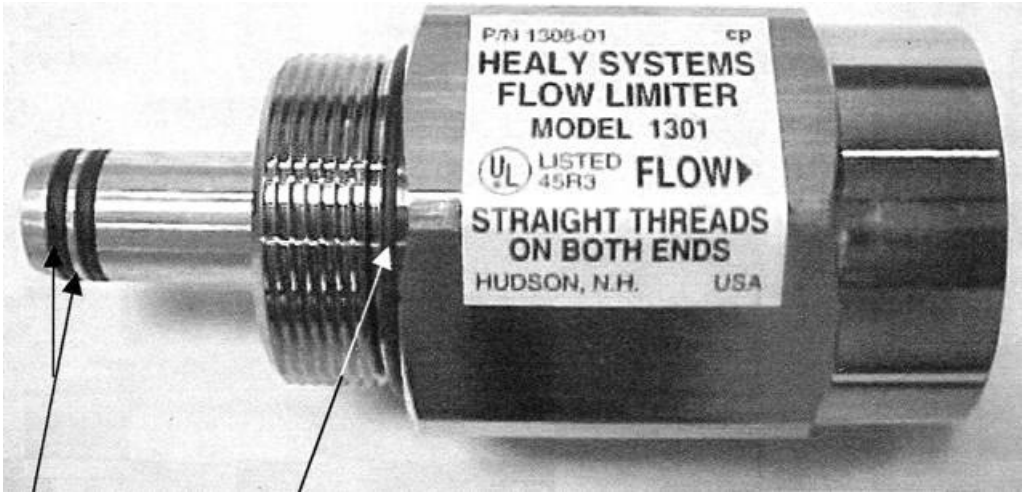


Quad Rings
P/N HB4

O-ring
P/N HB2

**The Healy Model 1301 Flow Limiter** is designed for installation into the lower half of the Healy P/N 8701VV breakaway before installation of a Healy Systems primary hose. The flow limiter reduces the product dispenser rate to conform to the U.S. EPA 10.0 gpm maximum dispensing limit.

**Installation Instructions**: Lubricate the quad rings and O-ring before assembly with oil or grease. **Do not use pipe sealant or tape on threads or seals.** Install the male end of the flow limiter into the breakaway as shown below and tighten to 35 to 70 foot pounds. Install the primary hose and nozzle according to their instructions. Make sure all fittings are tight, test for any leaks and check to be sure the flow does not exceed 10.0 gpm with the nozzle fully open (lever held all the way up).

Field replaceable parts are limited to replacement of the Quad Rings or O-ring. There is no maintenance required of the internal parts.

Dispenser | Whip Hose | 8701VV Breakaway | Flow Limiter | Primary Hose | Nozzle

## Healy 1302 Flow Limiter

Quad Rings
P/N HB4

O-ring
P/N HB2

**The Healy Model 1302 Flow Limiter** is designed for installation into the female end of the Healy P/N 807 swivel breakaway before installation of a Healy Systems primary hose. The flow limiter reduces the product dispenser rate to conform to the U.S. EPA 10.0 gpm maximum dispensing limit.

**Installation Instructions**: Lubricate the quad rings and O-ring before assembly with oil or grease. **Do not use pipe sealant or tape on threads or seals.** Install the male end of the flow limiter into the swivel breakaway as shown below and tighten to 35 to 70 ft-lbs. Install the primary hose and nozzle according to their instructions. Make sure all fittings are tight, test for any leaks and check to be sure the flow does not exceed 10.0 gpm with the nozzle fully open (lever held all the way up).

Field replaceable parts are limited to replacement of the Quad Rings or O-ring. There is no maintenance required of the internal parts.

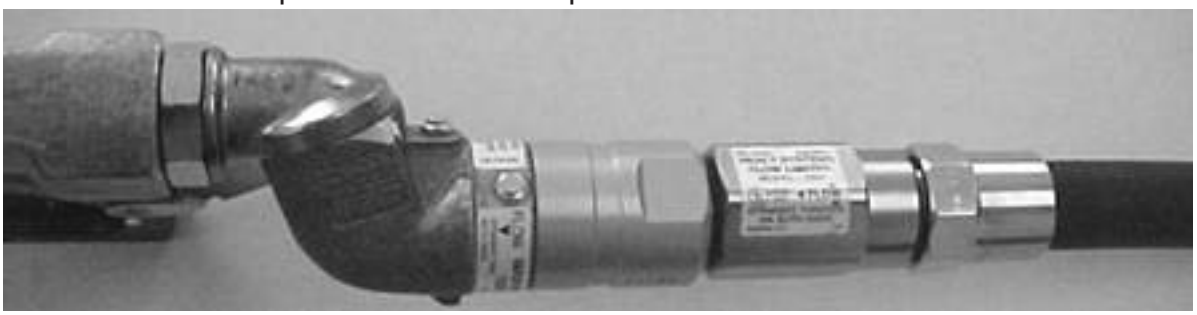

Nozzle | 807 Swivel Breakaway | Flow Limiter | Primary Hose

# GILBARCO ENCORE™ 300 & 500 SERIES DISPENSER RETROFIT for HEALY SYSTEMS, INC. MODEL VP1000 VAPOR RECOVERY ASSIST SYSTEM

**(KIT Z082 & Z083)**

## OUTLINE

**Notice: USE THIS PROCEDURE IF CONVERTING A BALANCE OR GILBARCO VaporVac™ VAPOR RECOVERY SYSTEM TO A HEALY VAPOR RECOVERY ASSIST SYSTEM**

This Manual is to be used for new, replaced, retrofitted, or reconditioned dispensers/pumps.

**See Section 15 For Dispensers With VaporVac™ Systems**


1. **Purpose**
2. **Safety**
3. **Models Covered**
4. **Parts Lists**
5. **Tools Required**
6. **Dispenser Access**
7. **Survey Scope of Work**
8. **Installing The Healy VP1000 System (For installations w/ ISD, see Section 18 regarding VP1000 position)**
9. **Installing The Sealed Nipple Assembly**
10. **Wiring Inside The Electronics Compartment**
11. **Connecting Healy Systems Dispensing Equipment**
12. **VP1000 Theory Of Operation**
13. **Testing The System**
14. **Trouble Shooting The VP1000**
15. **VaporVac™ Removal**
16. **Nozzle Hook Adjustment**
17. **VP1000 Vane & Rotor Service & Replacement Guide**
18. **Location Change of Healy VP1000 on Encore Series ISD Enabled Dispensers**

**Start-up/ New Installation/ Warranty/ Annual Testing Form**

1. **PURPOSE:**

**This procedure describes the tools, methods and skill levels required to install a Healy Systems, Inc. Model VP1000 Vapor Recovery pump in vapor ready Gilbarco Encore™ 300 and 500 series gasoline dispensers. Only Healy trained and certified contractors will be able to perform these retrofits or warranty will be void. The installer shall be a skilled petroleum technician and thoroughly familiar with the requirements of State, Federal and local codes for installation and repair of gasoline dispensing equipment. Also, they shall be aware of all the necessary safety precautions and site safety requirements to assure a safe and trouble free installation.NOTE: All electrical and hydraulic plumbing fittings referred to in these instructions must be UL "listed" or "recognized" for the purpose.**

**Note:** Installations of vapor piping into the inlet side of the vacuum pump should be sloped such that the natural flow direction is toward the vacuum pump. However, it is permissible to have a piping slope tilted away from the vacuum pump provided that all other applicable tests (Dispenser integrity and V/L) meet the specifications outlined in the appropriate section of the Executive Order and ***ARB Approved Installation, Operation and Maintenance Manual***.

**Note:** For installations with In-Station Diagnostics (ISD), the vapor flow meter shall be installed on the down stream side of the vacuum pump. Every effort shall be made to install the vapor flow meter so that vapor piping between the vacuum pump and the vapor flow meter is sloped such that the natural flow direction is toward the vapor flow meter. However, it is permissible to have the piping slope away from the vapor flow meter provided that all other applicable tests (Dispenser integrity, V/L and ISD Operability) meet the specifications outlined in the appropriate section of the Executive Order and ***ARB Approved Installation, Operation and Maintenance Manual***.

2. **SAFETY: Before installing the equipment, read, understand and follow:**

**-The National Electrical Code (NFPA 70)**

**-The Automotive and Marine Service Code (NFPA 30A)**

**-Any national, state and local codes that may apply.**

**The failure to install the equipment in accordance with NFPA 30A and 70 may adversely affect the safe use and operation of the system.**

**Accurate, sound installations reduce service calls: Use experienced, licensed contractors that practice accurate, safe installation techniques. Careful installation provides a sound troubleshooting framework for field repairs and can eliminate potential problems.**

1. **Read all instructions before beginning.**
2. **Follow all safety precautions:**
   - **Barricade the area.**
   - **Do not allow vehicles or unauthorized people in the area.**
   - **Do not smoke or allow open flames in the area.**
   - **Do not use power tools in the work area.**
   - **Wear eye protection during installation.**

3. **Use circuit breakers for multiple disconnects to turn off power and prevent feedback from other dispensers.**

## 3. MODELS COVERED:

**Gilbarco 300 and 500 Encore™ series dispensers, all options except non-vapor ready. The addition of the Healy Systems VP1000 to the Encore dispenser will increase the current draw of the dispenser by 2 amps. Use the label supplied to note this change.**

## 4. PARTS LISTS: (See Photo A)

**1 VP1000 Vacuum Pump**

**1 1373A Wire Harness / MC100 Series Interface Module Assembly**

**2 Interrupt jumpers (1, for 300 series & 1, for 500 series)**

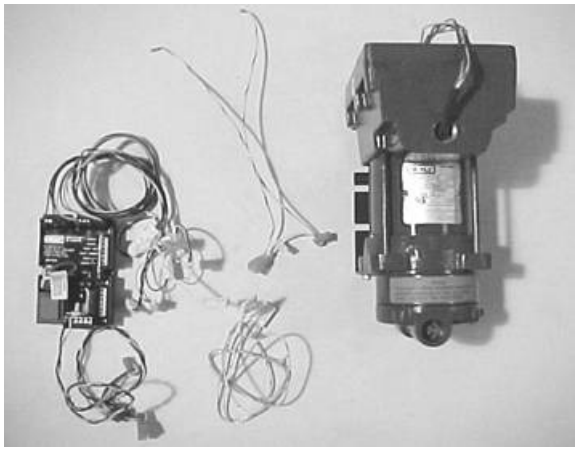

**PHOTO A**

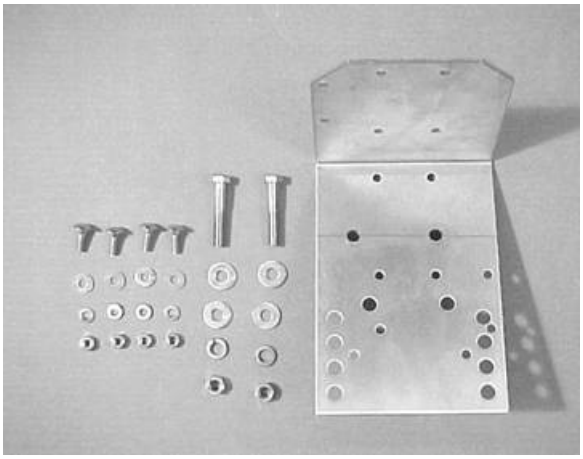

**PHOTO B**

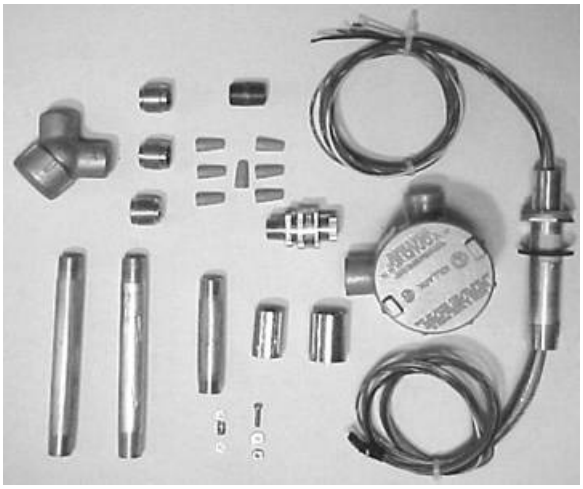

**PHOTO C**

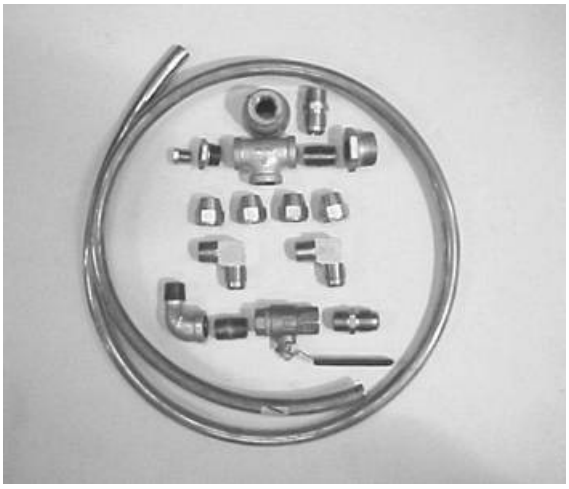

**PHOTO D**

**HARDWARE KIT Z082H: (See Photo B)**

| | |
|---|---|
| 2 | 3/8 - 16 x 2” bolts with nuts and washers |
| 1 | 1310 Mounting bracket |
| 4 | 1/4 - 20 bolts, washers, lock washers and nuts |

**ELECTRICAL KIT Z082E: (See Photo C)**

| | |
|---|---|
| 1 | Current change label (p/n 1405) |
| 7 | Wire nuts |
| 1 | 8-32 x 5/8” machine screw, washer and nut |
| 1 | #1316 potted conduit nipple |
| 1 | #8 ring tong terminal and star washer |
| 1 | Notice label (p/n 1406) |
| 1 | UL Listed label (p/n 1410) |
| 1 | 1/2” electrical union |
| 3 | 1/2” x 3/4” electrical reducing bushing |
| 1 | Explosion proof junction box |
| 1 | 1/2” capped elbow (electrical) |
| 1 | 3/4” coupling (electrical) |
| 2 | 1/2” x 7” electrical nipple |
| 1 | 1/2” x 4” electrical nipple |
| 1 | 1/2” electrical close nipple |
| 1 | 1/2” electrical coupling |

**VAPOR KIT Z082V: Vapor ready only (See Photo D) See photo U for Z083V VaporVac™ Kit**

| | |
|---|---|
| 2 | 1/2 ” NPT X 5/8” flair straight fittings |
| 3’ | 5/8” OD copper tube, type ‘L’ |
| 1 | 1” x 1/2 “ reducing bushing |
| 2 | 1/2 ” close nipple |
| 1 | 1/2 ” x 1/2 ” x 1/2 ” tee |
| 1 | 1/2” x 1/4” reducing bushing |
| 1 | 1/2 ” ball valve |
| 1 | 1/4 ” pipe plug |
| 4 | 5/8” flare nuts |
| 1 | 1/2” street elbow |
| 2 | 1/2” NPT x 5/8” flair elbow fitting |
| 1 | 1” x 1/2” bell reducer |

**MATERIALS SUPPLIED BY INSTALLER:**

**Thread Sealing Compound – non-Setting, UL Classified for use on all tapered threads, non-electrical, plumbing fittings.**

**Teflon tape**

**5. TOOLS REQUIRED:**

- **1/2” or 3/8” ratchet set w/ sockets 1/4” through 9/16” + 3” extension**
- **9” lineman’s pliers**
- **Assorted open end wrenches 1/4” through 3/4”**
- **Wire cutters/strippers 18 AWG and 26 AWG**
- **Assorted screwdrivers (flat blade-one must be 1/8” wide and Phillips)**
- **5/8” & 1/2” copper tube bending tool**
- **5/8” & 1/2” copper tube flaring tool**
- **Copper tubing cutter**
- **Electrical multi-meter**
- **Small hand brush (1-1/2” wide, for clearing chips)**
- **12” adjustable wrench**
- **10” pipe wrench**
- **Tape measure**
- **Allen wrenches**

**6. DISPENSER ACCESS:**

- **Secure Dispenser Access keys from Station Management.**
- **Remove lower cabinet panels and open upper access doors.**
- **Lock-out and tag-out all electrical power to dispenser being modified.**

**Refer to manufacturer’s manual to determine ‘A’ side and ‘B’ side of dispenser.**

**7. Survey – Scope of Work:** ***Perform this step before beginning steps 8 thru 12.***

**Read and familiarize yourself with the theory of operations sheet and wiring instructions for the VP1000 Vapor Pump. The installation of the pump is on a metal bracket mounted to the center cross bar, behind the main electrical 'J' box, see photo E. This is the opposite side that the 1" vapor tube terminates from the upper vapor manifold, see photo F. From this survey, you will have an indication of where the vapor plumbing fittings need to go. In the electronics compartment, locate the sealed electrical nipple coming up from the hydraulics compartment, near the center of the dispenser. In this area, there are a series of electrical knockouts, one of which needs to be removed to install the 1316 sealed nipple assembly for the Healy VP1000 electrical connections. The electrical interface module will be mounted on the cross rail near the place where the sealed nipples come from below. See Section 11.** ***<u>CAUTION:</u> ALL POWER TO DISPENSER UNDER MODIFICATION SHOULD BE COMPLETELY DISCONNECTED AND CAPPED OFF AT JUNCTION BOX TO AVOID UNINTENTIONAL FEEDBACK FROM OTHER DISPENSERS!!***

***Photo E***

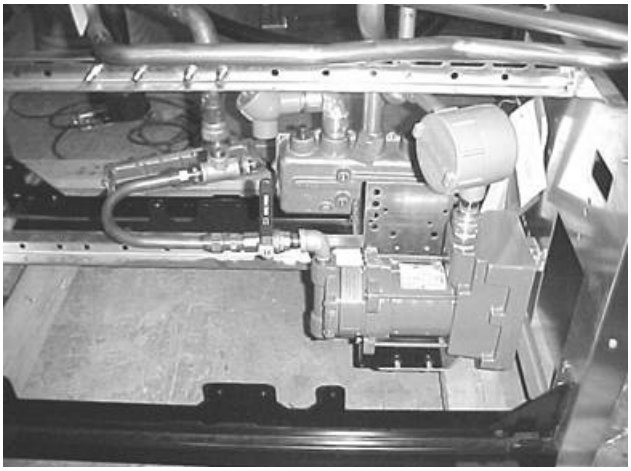

***Photo F***

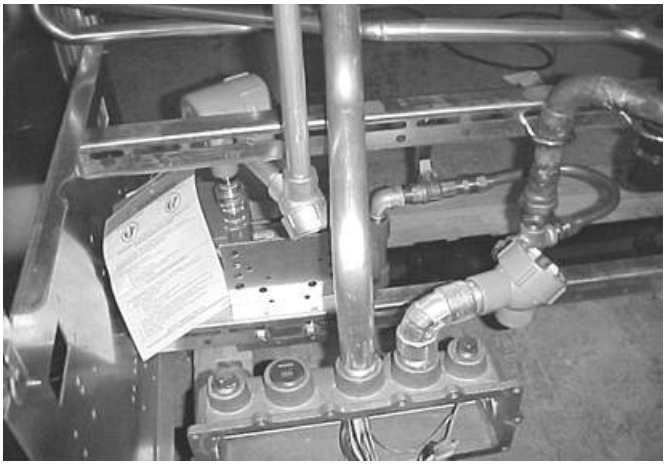

***Photo G***

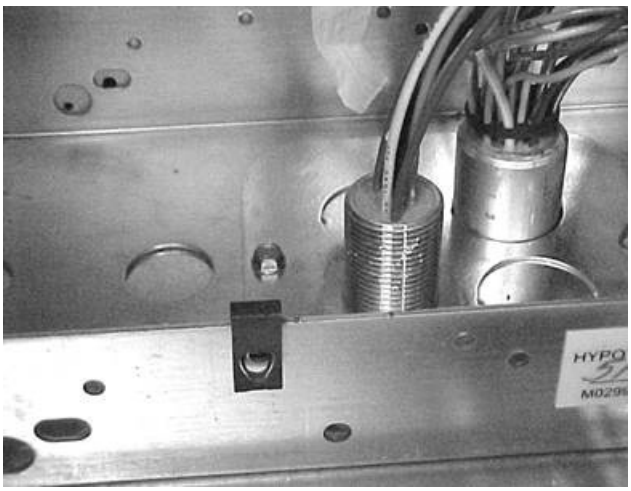

***Photo H***

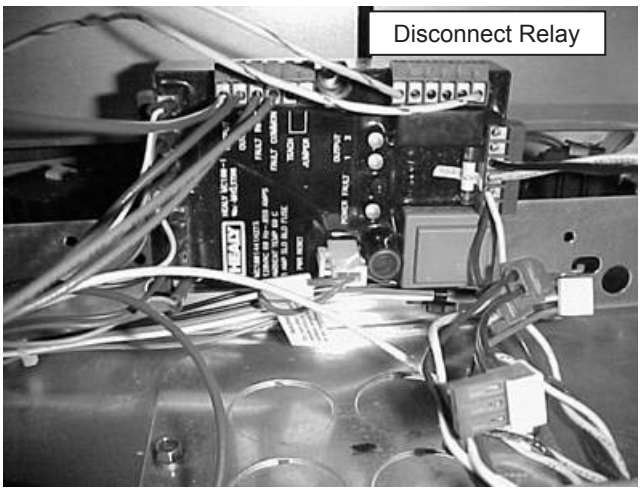

## 8. INSTALLING THE HEALY VP1000 SYSTEM:

- **Get the VP1000 mounting bracket and install to the center cross rail from the non-electrical J-box side, using two 3/8 – 16 x 2" bolts, nuts, flat and lock washers. Using the 2nd and 3rd holes from the right on the cross rail, select the bolt holes in the bracket that places the shelf of the bracket about 2" below the bottom of the cross rail. This position assures that the plumbing is self-draining and avoids traps in the vapor line. Do not completely tighten the hardware, see photo J.**

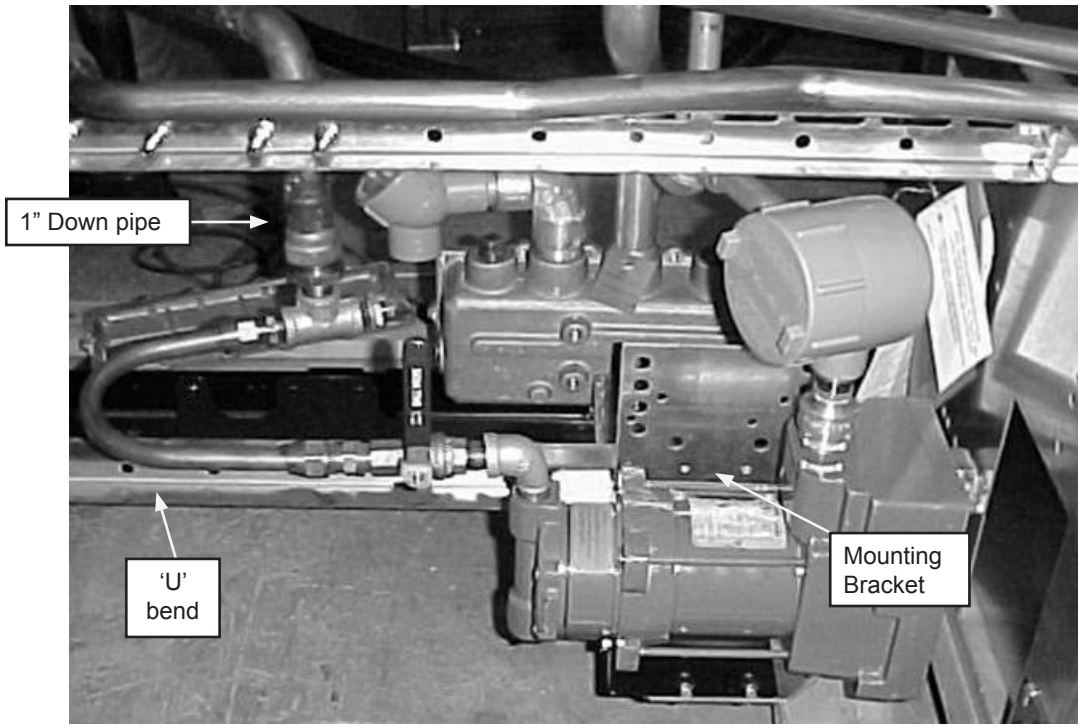


**Photo J**

- **Get the vapor pump and install a 1/2" NPT street elbow fitting into the 'IN' port and a 5/8" flare x 1/2" NPT elbow in the 'OUT' port using tape, not pipe dope. Looking at the face of the pump, completely tighten both fittings so they are facing directly out from the front of the pump.**
- **Position the pump on top of the mounting bracket with the fittings facing in the direction shown in photo J. Slide the pump to allow for matching the location of holes in the pump and mounting bracket.**
- **Loosely secure the pump to the bracket using the four 1/4" bolts, nuts, flat and lock washers. (Final tightening is done after the electrical is completely installed.)**
- **Using tape, install a 1/2" close nipple into the street elbow. To this, install the 1/2" ball valve and one of the 5/8" flare x 1/2" NPT straight fittings. Final tighten such that the handle on the ball valve points upward when the valve is closed.❑ Install and final tighten a 1" x 1/2" reducer bushing into the 1" vapor down pipe.**
- **To the 1/2 " tee, install a 1/2 " x 1/4" reducer bushing into one of the end 'run' openings, then install a 1/4" pipe plug into the bushing- final tighten. Install a 5/8" flare x 1/2 " NPT straight fitting into the other end 'run' opening and tighten. Install a 1/2 " close nipple into the branch opening.**

- **Install the above into the 1/2 " reducer fitting on the vapor down pipe, final tightening so the flare fitting faces away from the VP1000 pump, see photo J.**
- **Final connection from the pump to the down pipe is done after the electrical piping has been completed.**

**9. INSTALLING THE SEALED NIPPLE ASSEMBLY: (See Photo G)**

**NOTICE: THE INTERFACE MODULE THAT IS SUPPLIED HAS A HARNESS ATTACHED AND A WIRING PLUG FOR THE AC CONNECTIONS. ALSO SUPPLIED IS THE SEALED NIPPLE ASSEMBLY (1316) THAT MUST BE USED BETWEEN THE ELECTRONICS COMPARTMENT AND THE DIVISION 1 AREA (THE SPACE BELOW AND OUTSIDE THE ELECTRONICS COMPARTMENT).**

**Photo G**

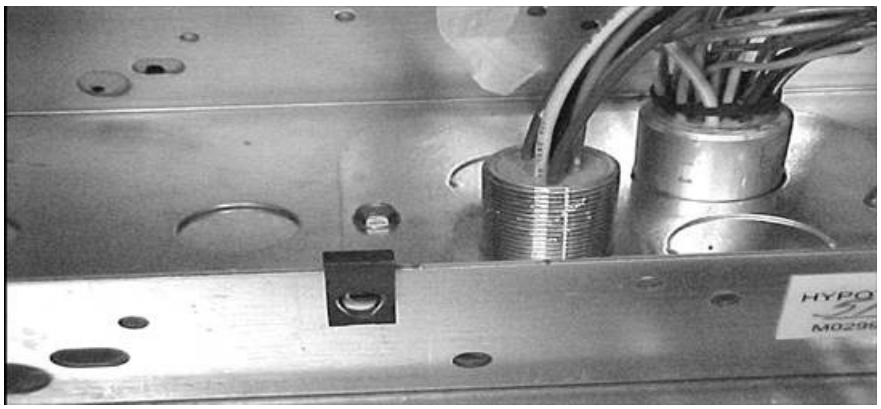

- **In the electronics compartment, locate the sealed nipple that contains the dispenser wiring. Notice that there are 2 or 3 blank knockouts next to the existing nipple. Diagonally, to the left and below the existing nipple, knock out one pre-punched filler piece. (Punch only the same one on each plate. Do not leave any empty holes).**
- **Remove the two hex head screws holding the knock out panel in place. The panel cannot be removed, but can be raised to allow access to the lower vapor barrier panel for removing the knockout in that piece and also allows access for securing the nuts of the sealed nipple assembly.**
- **Get the 1316 sealed nipple assembly and carefully remove the first nut and washer over the wires. Tighten the other nut down on the nipple as far as it will go leaving the washer on top of the nut.**
- **Run wires (from the short threaded end of sealed nipple) down from electronics cabinet through lower knockout only.**
- **Push the rubber washer down on the sealed nipple approximately 2". Run wires (from the long threaded end of sealed nipple) and nipple up through the upper knockout plate. Install the washer and nut that was removed above and tighten the nipple securely to the plate.**
- **Reposition the upper knockout plate to its original location and secure with the previously removed screws. Check to be sure the rubber washer is seated on the lower panel.**

- **Do not use pipe dope or tape on the following fittings and be sure there is at least five full threads of engagement of the fittings in their respective couplings.**
- **To the bottom of the sealed nipple assembly installed above, install a 3/4“ electrical coupling and then, a 3/4“ x 1/2“ reducing bushing into the coupling.**
- **Install one of the 1/2” x 7” electrical nipples to the reducing bushing above then the 1/2” coupling and then the other 1/2” x 7” electrical nipple.**
- **Get the 1/2” capped elbow and remove the cover. Thread the wires from above through one of the elbow hubs and completely tighten so that the open hub of the elbow faces the electrical wires on top of the motor.**
- **Get the 4” long conduit and install in the remaining opening in the capped elbow. (Do not pull wires at this time).**
- **Install 3/4” x 1/2” reducing bushings into each opening on the electrical junction box supplied.**
- **Install the J-box to the 4” nipple as shown in Photo J. This should position the cover opening to your left and the remaining opening on the J-box approximately over the electrical wires on the pump. The motor or bracket position may need to be adjusted to attain this alignment.**
- **At the VP1000, get and install the threaded half of the 1/2” electrical union over the wires coming from the motor. Do not use pipe dope on these fittings and be sure there is at least five full threads of engagement of the fittings in their respective couplings.**
- **Thread a 1/2” electrical close nipple into the remaining half of the electrical union and install into the remaining opening of the J-box.**
- **Carefully feed the motor wires into the split union pieces and into the “J” box until the two halves of the union can be slid together and secure.**
- **Completely tighten the hardware on both the pump and the bracket.**
- **Carefully feed the wires from the capped elbow into the J-box, pull wires loosely until the cover can be replaced on the capped elbow. Replace cover.**
- **In the “J” box, leave about 6” of wire on both the wires coming from the motor and from the sealed nipple, cut off excess wire and strip approximately 1/2” of insulation from all wires.**
- **Use wire nuts to join the wires, color for color, together. There may be some extra wires in some sealed nipples, cap these off and dress aside.**
- **Replace the cover on the junction box.**

- **Bend a broad 'U' into a piece of 5/8" copper tube and carefully fit between the flare fittings between the VP1000 and the vapor down-pipe. One of the 'legs' should be at least 6" long before cutting and installing the nuts and flaring the ends. This installation provides a flexible cushion in the tubing, see photos K & L below.**
- **Note: The discharge piping from the 5/8" flare elbow attached to the out port of the VP1000 is left up to the installer. There is extra 5/8 tubing, flare elbow and a bell reducer to help with the final installation.**

**Photo K**

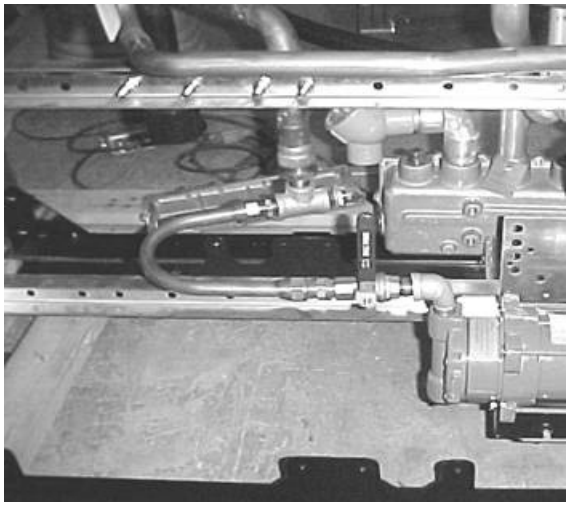

**Photo L**

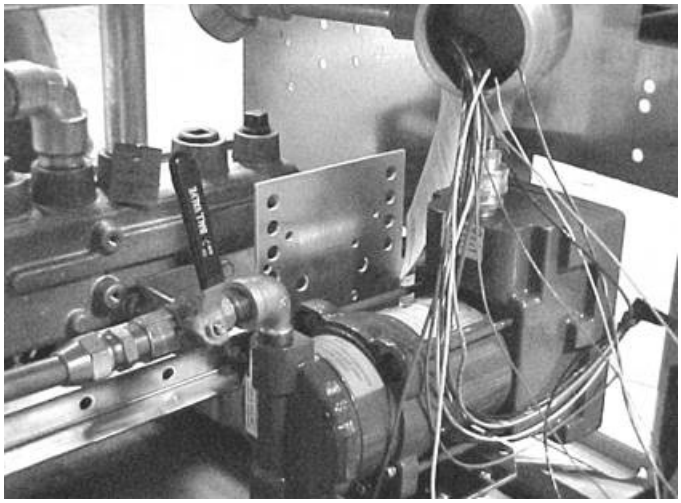

**10. WIRING INSIDE THE ELECTRONICS COMPARTMENT: (SEE PHOTOS H, M & N)**

- **Secure the prewired Interface Module to the inside, between the two cross rails in the electronics compartment using the 8-32 screw, nut and washer supplied, see photo H.**
- **The wiring kit contains two jumper assemblies, one marked 300 and the other marked 500. Select the appropriate jumper and connect the stripped wires, one to terminal 1 of the solenoid disconnect relay, see photo H, and the other to terminal 6 of the same terminal block.**
- **Identify P108 on the 300, or P1200 on the 500 on the valve converter board and remove the connector from the socket on the board. Insert this connector into the mating socket on the cable. Insert the matching plug on the cable into J108 or J1200 on the board, see photos M & N.**

**Photo M (300)**

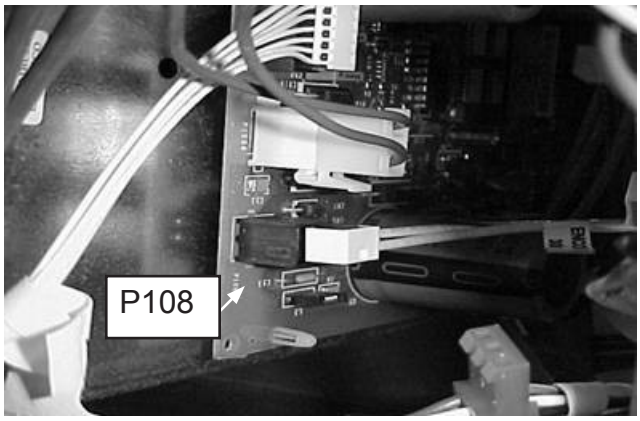


**Photo N (500)**

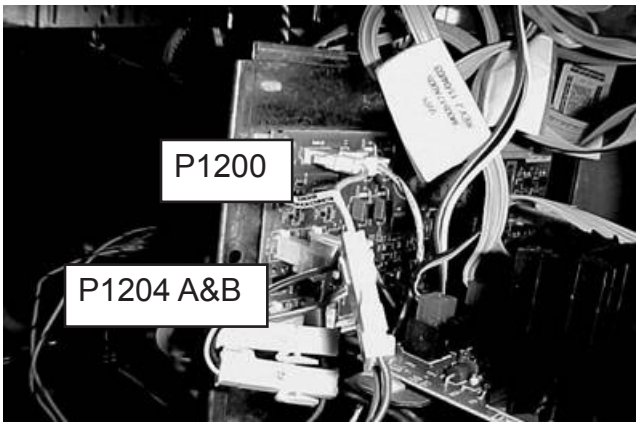


- **Using the cable harness attached to the module, identify and segregate the "A" side and "B" side connectors. The valve board connections are arranged by product, so it is important to be sure the "A's" and "B's" are connected to the appropriate sockets on the board. Connect the 'signal' inputs A1, 2, 3 and B1, 2, 3 male/female connectors on the cable to the appropriate locations on the valve converter board. Be sure to keep the "A's" and "B's" together as there are "A's" and "B's" on both sides of the valve converter board. Note only connect the module to active gasoline products – <u>do not connect to diesel or other unused valve connection points.</u>**
- **The seven (7) wires from the sealed nipple assembly are connected as follows:**

  **Red (either one) connected to 'OUTPUT 1' on output terminal board**

  **Red (other one) connected to 'OUTPUT 2' on output terminal board**

  **Purple connected to 'FAULT' on output terminal board**

  **Orange connected to 'FAULT COMMON' on output terminal board**

  **Green – connect the ring lug supplied and then attach to chassis, see photo O.**

  **Black – connect to Motor terminal on power input terminal strip**

  **White – connect to Neutral on input terminal strip**
- **The black wire on the power jumper is connected to 'Power In' and the white wire is connected to 'Neutral' on the input terminal strip. The orange connector on the other end of the black and white pair is connected to any available power plug on the dispenser harness. The dispenser power harness is composed of a black, white and green wires running together along the center rail and has orange, 3-pin connectors that will mate with the power wire from the MC100-1 module, see photo P.**

**Photo O**

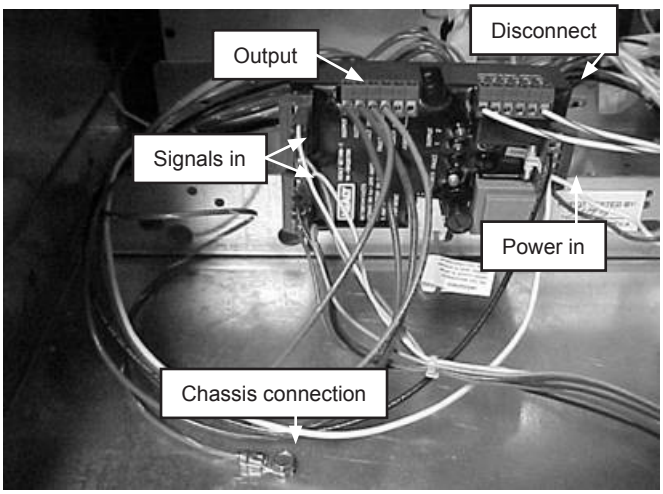


**Photo P**

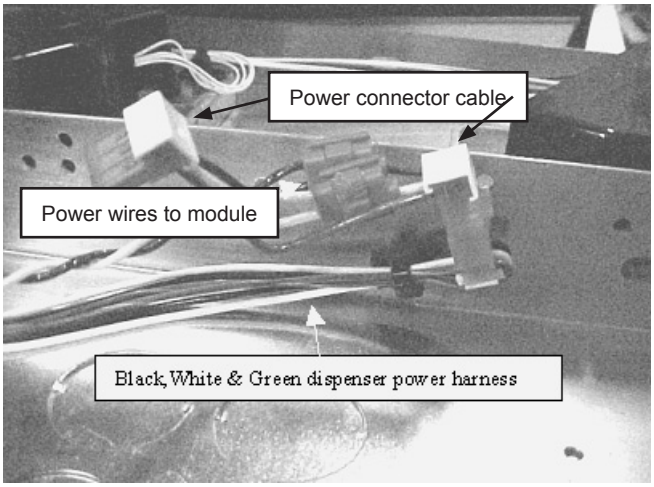


## 11. CONNECTING HEALY SYSTEMS DISPENSING EQUIPMENT

- **Completing the connection of Healy Systems dispensing equipment requires the installation of Healy Systems Phase II dispenser adaptors, hoses and nozzles (Hanging Hardware).**
- **If applicable, remove existing non-Healy hanging hardware (from the dispenser product outlet adaptor, to and including the nozzles).**

- **Vapor ready dispensers may require a Healy Systems adaptor to make the hose threads compatible with other Healy Systems equipment. Install necessary adaptor following instructions packed with the adaptor. Various adaptors and pigtails are available, depending on how the dispenser is configured: M34 metric (Healy designation F3 or S3) or balance ready (Healy designation S4).**
- **Healy Vapor Recovery Hoses are available in various lengths to satisfy local ordinances and still provide "far side" fueling capability. Install these following instructions contained on the shipping box.**
- **Breakaways are required: Install either Model 8701-VV breakaway or Model 807 swivel breakaway; install using the instructions supplied with the unit.**
- **The Healy Systems nozzle Model 900 (EVR) series is the only nozzle necessary to complete the upgrade. *Check to be sure the nozzle hook is mounted in the position shown for Healy nozzles in section 16*. Be sure to check for proper fit in the nozzle holster and that the nozzle can be locked in the off position. Also, be sure that when the nozzle is locked, that the dispenser cannot be activated from the locked position.**

## 12. VP1000 Theory of Operation

**The Healy Systems VP1000 is a self-contained rotary vane pump, designed for gasoline vapor recovery utilizing various parts of the Healy System Vapor Recovery product line. It is intended for use by either OEM dispenser/pump manufacturers or as an after market add-on to make existing equipment compatible with Healy System technology. In order to convert to 'others' equipment, an electronic interface is required to adapt the targeted pump/dispenser to the new vapor recovery equipment. The interface senses when authorization to dispense has been given and sends signals to the motor to operate at a low speed for one hose, or a higher speed for two hoses. It also functions to shut off the pump/dispenser if it senses that the vapor pump is not operating properly. The vacuum is regulated at a level sufficient to clear liquid gasoline from the vapor path in MPD applications. The Healy nozzle controls the actual amount of vapors withdrawn, itself, in response to the liquid gasoline flow rate.**

**MOTOR SPECIFICATIONS**

| | |
|---|---|
| Horsepower | 1/8 |
| Voltage | 120VAC |

**INTERFACE SPECIFICATIONS**

| | |
|---|---|
| Input voltage | 120 VAC |
| Relay current capacity | 5A AC |
| Input signals: | AC and DC voltages up to 130 VAC max |
| Motor Input signal | 5 VDC @ 20 Hz 50% Duty Cycle |

## 13. TESTING THE SYSTEM:

- **Carefully review all work completed, being sure all mechanical joints are thoroughly tightened and electrical connections sealed.**
- **Open the product crash valves and restore power to the dispenser.**
- **With the power on, but no nozzles authorized, the VP1000 should not be running (unless the ambient temperature is below 40°F), but the power LED (yellow) should be energized on the interface module.**
- **Authorize one handle and the vacuum system should activate when the gasoline flow control valve is engaged. Repeat for all other nozzles, individually testing each nozzle on each side of dispenser. With each authorization, one of the green LED's on the interface module should illuminate and the VP1000 activate.**
- **Note: For unihose dispensers, conduct individual tests for each product grade on each side of the dispener to ensure that the same LED activates for all grades on the same side. If the other LED activates, wiring needs to be corrected.**
- **Authorize one nozzle, listen to the speed of the VP1000. With one nozzle activated, the speed will be slower than if a nozzle on <u>each side</u> is activated. Activate a nozzle on the other side of the dispenser and listen for the speed to change.**
- **To test the tightness of the vapor plumbing installed on the suction side of the system requires a 0-100" water column gauge. Connect the gauge into the 1/4" test port of the adaptor tee installed earlier in section 8 Photo J. Continue by following and completing the START-UP / NEW INSTALLATION/ WARRANTY/ ANNUAL TESTING FORM.**

## 14. TROUBLESHOOTING THE VP1000:

- **Use extreme care and caution when performing the tests listed below. If 120 VAC is accidentally applied to the fault or DC terminals, the module will be destroyed.**
- **With power applied to the dispenser, but no products authorized, there should be 120 VAC between neutral and 120 VAC on the module terminal strip.**
- **As above, with any product authorized, there should be single speed power applied to the VP1000. Verify this by checking for 2-3 VDC from OUTPUT 1 (RED WIRE) to FAULT COMMON (ORANGE WIRE), (or from OUTPUT 2 TO FAULT COMMON) also; one GREEN LED should be illuminated. With a second product authorized on the opposite side of the dispenser *i.e.* one product on each side, the motor should operate at higher speed and there should be 2-3 VDC on both output 1 and 2 (to fault common) and both GREEN LED's should be illuminated.**
- **With the pump running, a fault can be simulated by shorting, with a jumper wire, the "FAULT INPUT" (purple wire) to FAULT COMMON (orange). This should cause the motor to shut off, the solenoid valves to lose power and the dispenser to shut down. Also, as long as the short is maintained, the red LED will be illuminated. Removing the short will not automatically reset the module. To reset the module, remove the short, remove power to the dispenser for twenty seconds and restore power. The module should now be reset and the red led extinguished. This can also be accomplished by using the power reset (PWR RESET) on the module.**

- **If diagnosing a problem where the LED is already illuminated, a steady light indicates a low current condition, therefore expect a vane or rotor problem. If the LED is blinking, that indicates a high current condition and would expect to find a jammed rotor or vapor line flooded with product. See Start-up/ New Installation/ Warranty/ Annual Testing Form.**
- **The electronics of the motor will make three attempts to have a successful start of the motor. If it detects a problem, on the fourth unsuccessful start, it will short the fault line to signal minus (DC-) and shut down the electronics.**

**MC100 Interface Module**

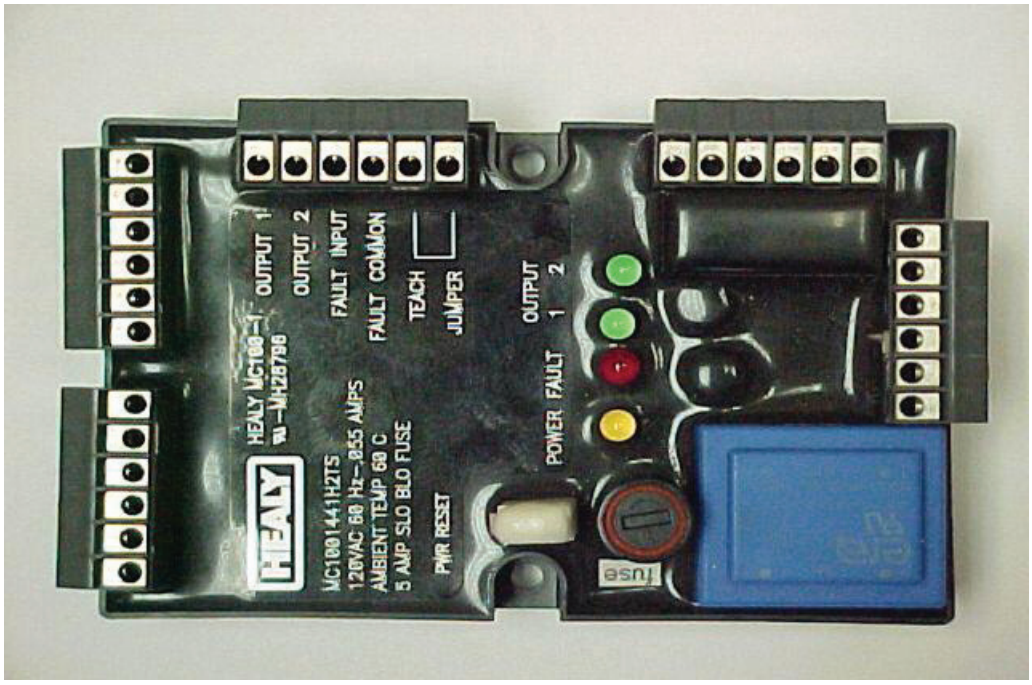

**15. VaporVac™ Removal:**

**Described below are the steps necessary to remove a VaporVac™ and re-plumb the vapor lines to install the Healy VP1000 series vapor assist recovery system.**

- **Removal of the VaporVac pumps requires the top cover of the dispenser be removed. From the top of the cover, remove the four corner bolts and lifting eyes if present, along with various washers. Remove the cover. Save hardware for reinstallation.**
- **With the top removed, notice the 'loose' cross rails that the top cover bolts were screwed in to – remove these rails and save for reinstallation after conversion.**
- **Be sure all electrical power to the dispenser has been disconnected and disconnect the electrical connections going to each pump.**
- **Loosen and disconnect all the vapor pipes from both VAC pumps. Do not remove the vapor pipes from the product outlets, see photos Q and R.**
- **From one of the pumps, remove the 3/4" NPT X 1" flare elbow fitting and save for use below. Remove the two brackets and motors.**

**Photo Q**

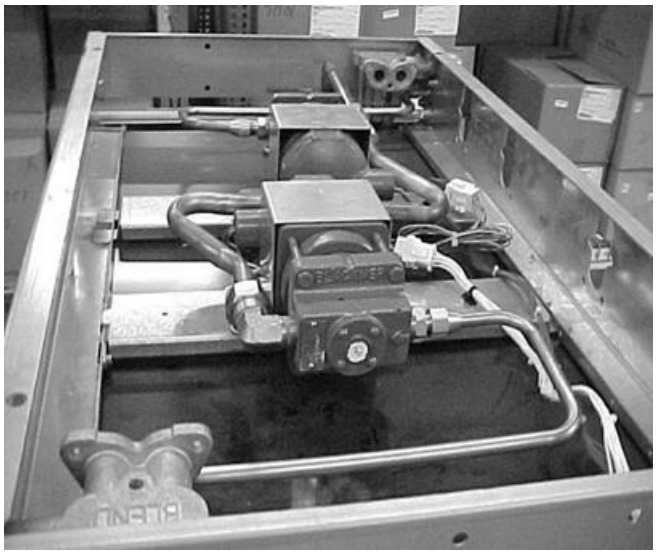

**Photo R**

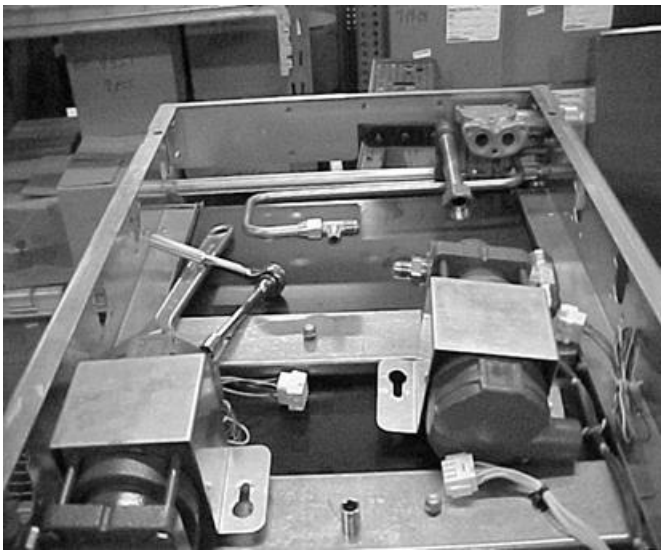

- **Into the 3/4" x 1" elbow that was removed above, attach the 3/4" x 1/2" bell reducer supplied in place of the 3/4" coupling shown in Photo S and then install the 1/2" NPT x 1/2" x 1/2" flare tee using tape. Tighten with the branch pointing opposite the flare connection, and then attach the flare fitting to the vapor down pipe fitting, see photo S.**

- **Connect the loose vapor tube fitting from the dispenser outlet to the run flare position on the tee. Cut and flare a piece of 1/2" copper tube suitable to connect the other vapor connection to the tee using the 1/2"x 1/2" flare elbow fitting supplied, see photo T.**

**Photo S**

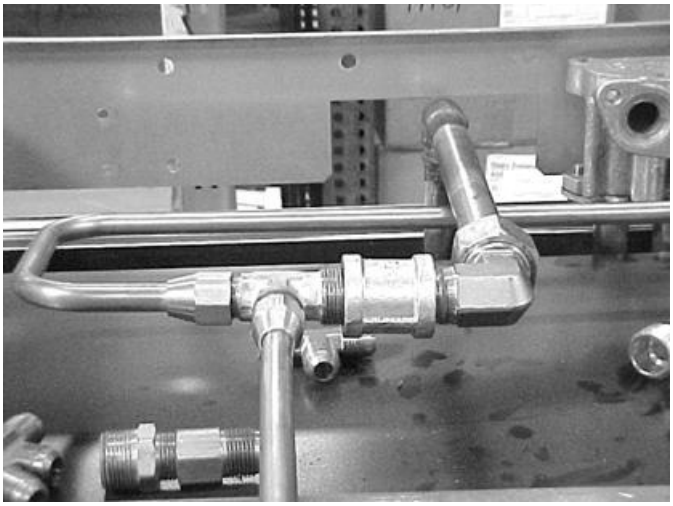

**Photo T**

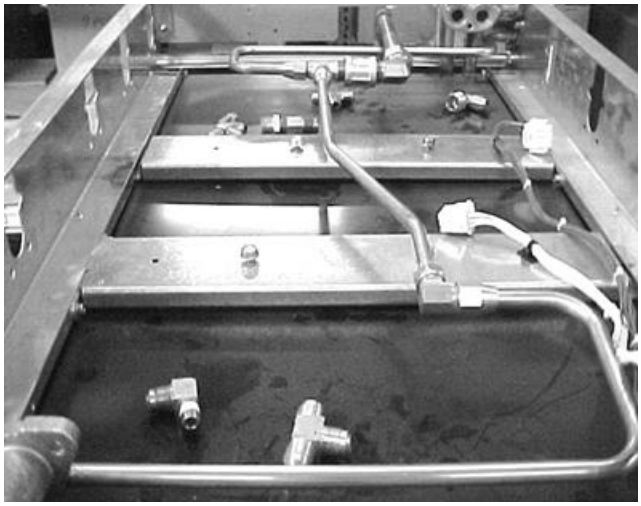

- **Electrical wiring and lower cabinet plumbing are the same for Balance or VaporVac™.**
- **Deprogram the VaporVac™ system using the "Electronically Disabling the VaporVac System" instruction sheet, enclosed in the Z083V VaporVac™ Kit.**
- **After testing, reinstall the cross rails, top cover and hardware removed earlier.**

**Z083V VaporVac™ Kit**
**Photo U**

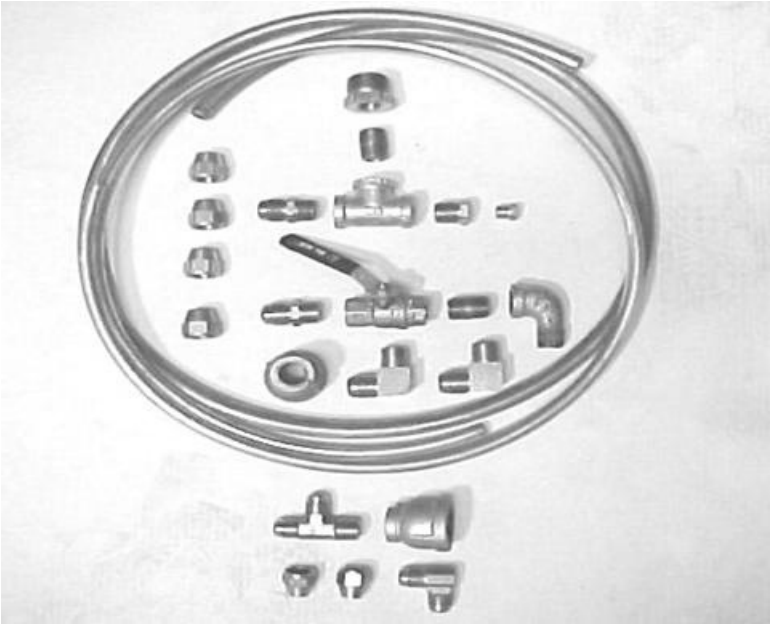

**VAPOR KIT Z083V: for VaporVac™ Kit (See Photo U)**

| | |
|---|---|
| 1 | 1/2” NPT X 5/8” flair straight fittings |
| 3’ | 5/8” OD copper tube, type ‘L’ |
| 1 | 1” x 1/2” reducing bushing |
| 2 | 1/2” close nipple |
| 1 | 1/2” x 1/2” x 1/2” tee |
| 1 | 1/2” NPT x 1/4” reducing bushing |
| 1 | 1/2” ball valve |
| 1 | 1/4” pipe plug |
| 4 | 5/8” flare nuts |
| 1 | 1/2” street elbow |
| 2 | 1/2” NPT x 5/8” flare elbow |
| 1 | 1” x 1/2” bell reducer |
| 1 | 1/2” flare x 1/2” flare x 1/2” NPT tee |
| 1 | 3/4” x 1/2” bell reducer |
| 1 | 1/2” x 1/2” flare elbow |
| 2 | 1/2” flare nuts |
| 2’ | 1/2” OD copper tube, type ‘L’ |
| 1 | “Electronically Disabling the VaporVac System” instruction sheet |

## 16. GILBARCO ENCORE NOZZLE HOOK ADJUSTMENT

This document details how to adjust Gilbarco Encore dispensing unit nozzle hooks to accommodate various manufacturers' nozzles.

Required tools: drill, 7/32" or # 22 drill bit, 1/4" square-tip driver, 7 mm metric hex nut driver or socket, 3/8" nut driver or socket.

NOTE: AC or battery powered drills must not be used at the dispensing unit because of the danger of explosion or fire due to the presence of hazardous vapors.

**Step One: Preparation.**

1. Notify site personnel of work to be performed.
2. Secure work area.
3. Isolate dispensing unit from point-of-sale or pump controller.
4. Close shear valves.
5. Remove nozzle(s) from nozzle boot(s) and place on ground.

**Step Two: Remove nozzle boot(s) from dispensing unit.**

1. Loosen two nozzle boot mounting screws. (See figure 1) using 1/4" square tip driver. Note: Save nozzle boot mounting screws for use later.
2. Remove nozzle boot from door by pulling toward you.

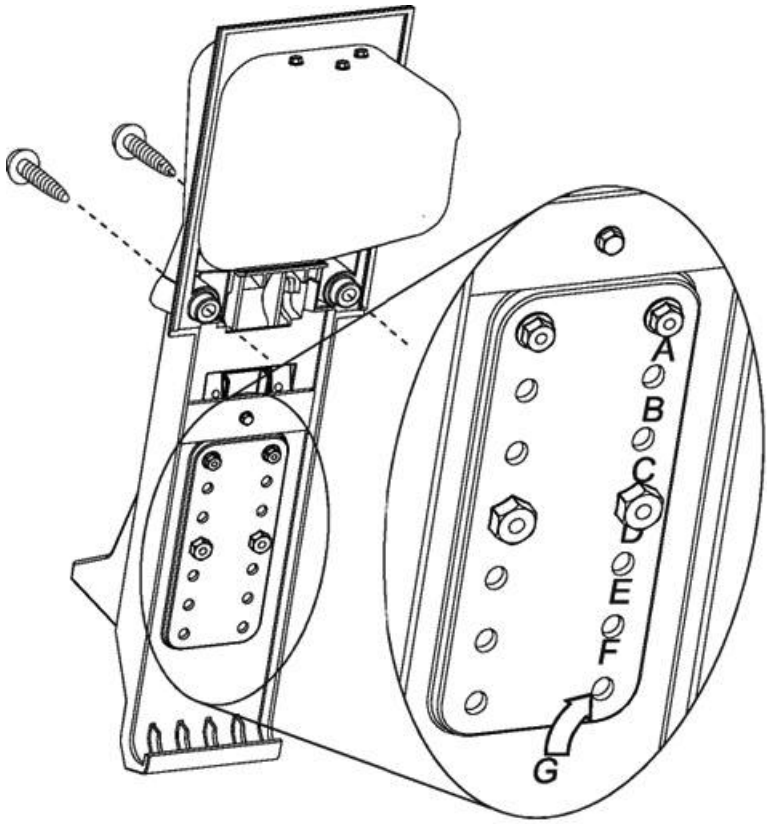


**Figure 1**

**Step Three: Remove nozzle hook from nozzle boot.**

1. Place nozzle boot face down on work surface covered with soft cloth to protect nozzle boot face.
2. See figure 1 to identify existing nozzle hook retaining screw and nut locations. Identifying marks are located under right hand row of indented hole locations. Standard nozzle hook locations are A & D.
3. Use 7mm nut driver or socket to remove two upper hex head screws.
4. Use 3/8” nut driver or socket to remove two nuts from lower carriage bolts.
5. Remove nozzle hook and carriage bolts from nozzle boot. Save hex head screws, carriage bolts and nuts for use later.

**Step Four: Determine Nozzle Hook Position**

1. Determine new nozzle hook position using chart below as guide to select new hole positions. See Figure 1 to identify nozzle hook retaining screws and nuts locations. Identifying marks are located <u>under</u> right hand row of indented hole locations.

| Nozzle Type | Upper Hex Head Screw Location | Lower Carriage Bolt & Nut Location |
|---|---|---|
| Standard Factory Location All Non-Vapor | A | D |
| VaporVac - OPW, Husky, Emco Wheaton | A | D |
| VaporVac - Catlow, Richards | B | E |
| Healy System | C | F |
| Balance - Husky Short | A | D |
| Balance - Husky Long, Emco Wheaton Long | E | Unmarked. Use nozzle hook carriage bolt holes as drill guide. |
| Balance - OPW Long | Bottom hole set (“G” on Figure 1) | Unmarked. Used nozzle hook carriage bolt holes as drill guide. |

**Step Five: Drill New Holes.**

1. Use 7/32” or # 22 drill bit to drill new holes as needed.
2. When locations “E” or “G” are used by the upper hex head screws, the lower carriage bolt and nut hole set are unmarked. Temporarily mount the nozzle hook with the upper hex head screws in location “E” or “G” (as determined by chart) then use the nozzle hook carriage bolt holes as a drilling guide for the unmarked hole set.
3. Once holes are drilled, remove nozzle hook and clean up debris around hole set.

**Step Six: Assemble nozzle hook to nozzle boot.**

1. Reverse Step Three to assemble nozzle hook to nozzle boot.

**Step Seven: Test nozzle hook adjustment using new nozzle.**

1. Hold nozzle boot upright and insert nozzle over nozzle hook and into boot. Wiggle boot to verify the nozzle does not slip out of position.

**Step Eight: Install nozzle boot(s) onto dispensing unit.**

1. Reverse Step Two and install the adjusted nozzle boot onto the dispensing unit.

**Step Nine: Re-insert Nozzles into the boot.**

## 17. VP1000 Vane & Rotor Service & Replacement Guide

**Caution** **Disconnect power before beginning service.**

1. The work area **must** be clean and have sufficient lighting.
2. Disconnect the vapor piping connected to the **IN** and **OUT** ports of the VP1000 cover assembly.
3. Remove the four Allen head screws and lock washers that secure the pump cover assembly to the pump housing and remove the cover carefully.

**Caution** **Use a spill cloth when removing the cover, as there may be some gasoline inside the pump cavity**.

4. Carefully turn the rotor assembly by hand until the shaft key notch is at the 12 o'clock position. (See Figure 1)
5. Remove the rotor, vanes and shaft key from the pump housing.

**Note:** Place your hand or a container under the rotor while removing. Do not use any sharp objects that would scratch the surfaces of the pump cavity, pump shaft, rotor, or vanes.

6. Rotate the shaft by hand. If the shaft does not rotate freely, the entire vacuum pump needs replacement (p/n VP1000-5).
7. If the rotor and vanes are cracked, chipped, excessively worn or excessively dirty, the rotor and vanes should be replaced because cleaning will not remedy these conditions (p/n VP1000VRC or VP1000VRC-P).
8. If there is no visible damage, use a lint-free cloth with isopropyl alcohol to clean the rotor and vanes.
9. Using a lint-free cloth with isopropyl alcohol, thoroughly clean: the inside of the pump ring and rear of the pump cavity, the rotor shaft, and the inside of the pump cover.
10. Reposition the shaft (if necessary) so that the shaft key notch is in the 12 o'clock position. Install the cleaned original or new shaft key onto the shaft.
11. Carefully install the cleaned original or new rotor onto the shaft followed by the cleaned original or new vanes into the rotor.

**Note:** The rotor assembly should slide on to the shaft easily, without excessive force. (Rotors and vanes are reversible)

12. Lightly lubricate and install the new O-Ring for the pump housing.

**Note:** Do not allow any lubricant to get inside the pump housing.

13. Install the pump cover using the four Allen head screws and lock washers removed in step 3 and cross tighten.

**Note:** Use caution when sliding the pump cover over the O-Ring seal to prevent cutting or tearing.

14. Re-connect the vapor piping to the **IN** and **OUT** ports of the pump cover assembly that was removed in Step 2.
15. Re-apply power. Test for normal operation. (See VP1000 Vacuum Performance Test Procedure)

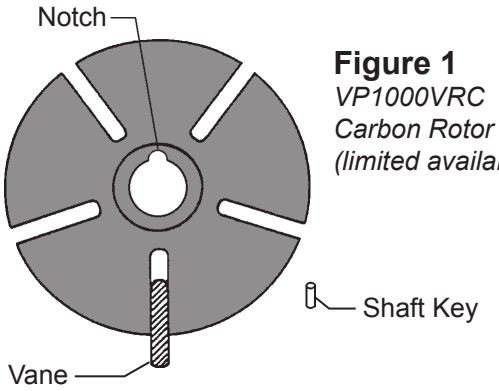


**Figure 1**
*VP1000VRC Carbon Rotor (limited availability)*

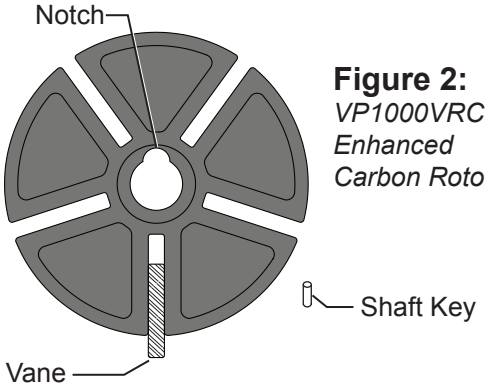


**Figure 2:**
*VP1000VRC-P Enhanced Carbon Rotor*

## 18. Location Change of Healy VP1000 on Encore Series ISD Enabled Dispensers

1. DESCRIPTION OF NEW VP1000 POSITION

To accommodate room for the ISD vapor flow meter and facilitate proper connection above a vapor line shear valve, the Healy VP1000 Vacuum Pump has been moved up approximately 20 inches in the hydraulics compartment from position A to position B as shown in Figure 1 below.

Note: Encore Series Dispensers may be field retrofit with the Healy VP1000 ISD Enabled by ordering Gilbarco Kit M07801S001 (contains all required parts and instructions).

Figure 1

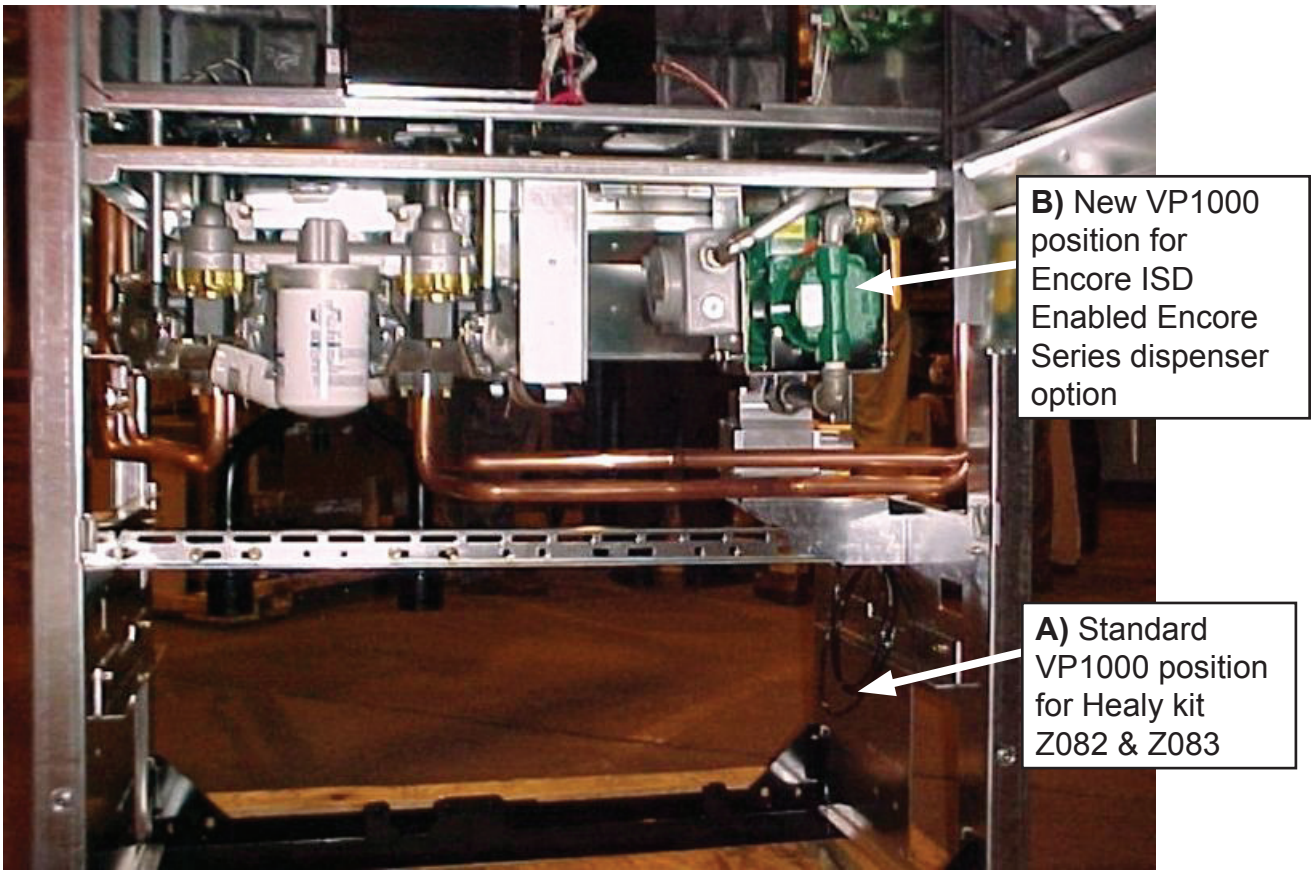

The ball valve and test port required for Healy startup testing and troubleshooting have been moved to locations C and D as shown below in Figure 2.

Figure 2

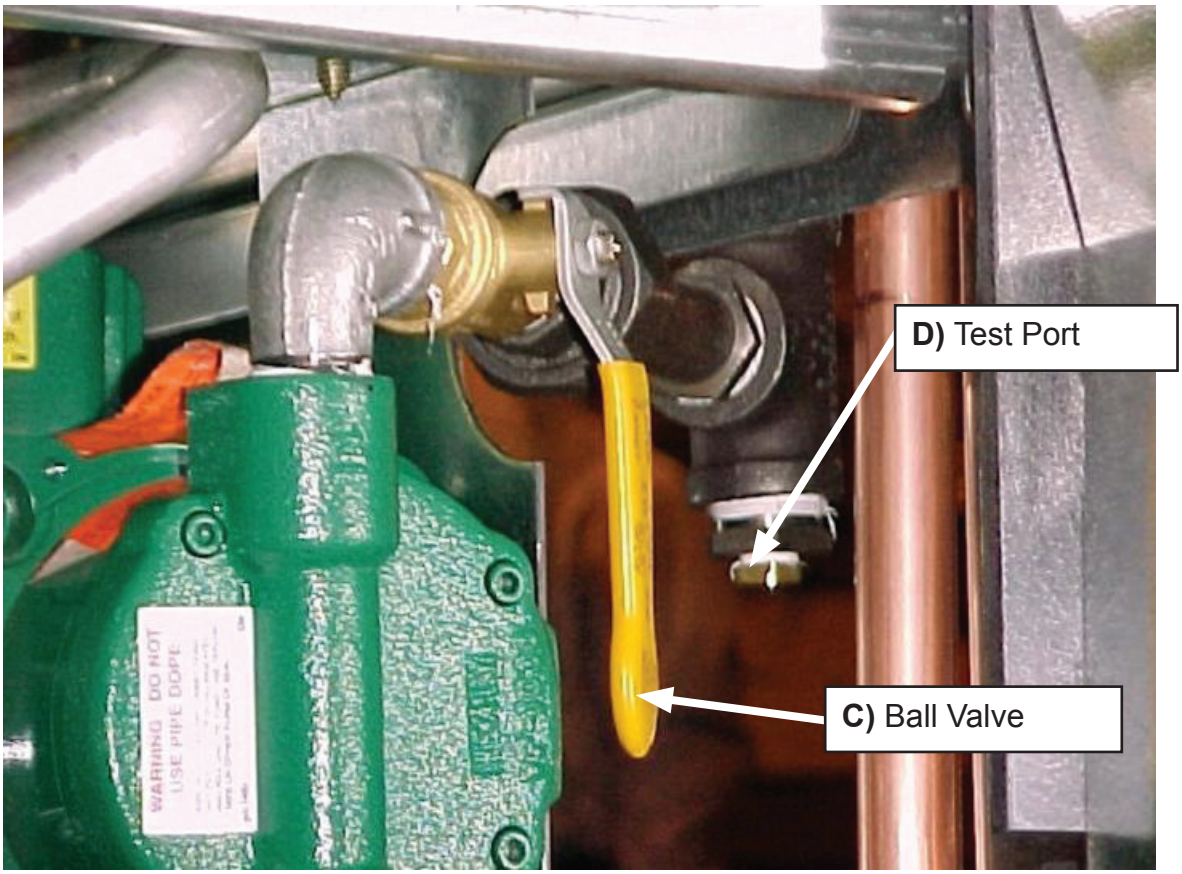


2. TESTING, TROUBLESHOOTING, SERVICING AND OTHER QUESTIONS

Please refer to Section 13 “TESTING THE SYSTEM” and the “START-UP / NEW INSTALLATION / WARRANTY / ANNUAL TESTING FORM” of the Encore series dispenser retrofit for Healy Systems manual for the detailed instructions on testing the VP1000 vacuum pump and dispenser piping. The manual also includes troubleshooting information in Section 14 if a problem is discovered during testing.

## 3. LOCATION OF VEEDER-ROOT ISD FLOW METER WITH RAISED VP1000

Figure 3 shows the location of the Veeder-Root ISD flow meter when used with the raised Healy VP1000 vacuum pump on a Gilbarco Encore series ISD enabled dispenser. Please refer to the ISD sections of the IOM for information on the proper installation, start-up and operation of the ISD flow meter.

Figure 3

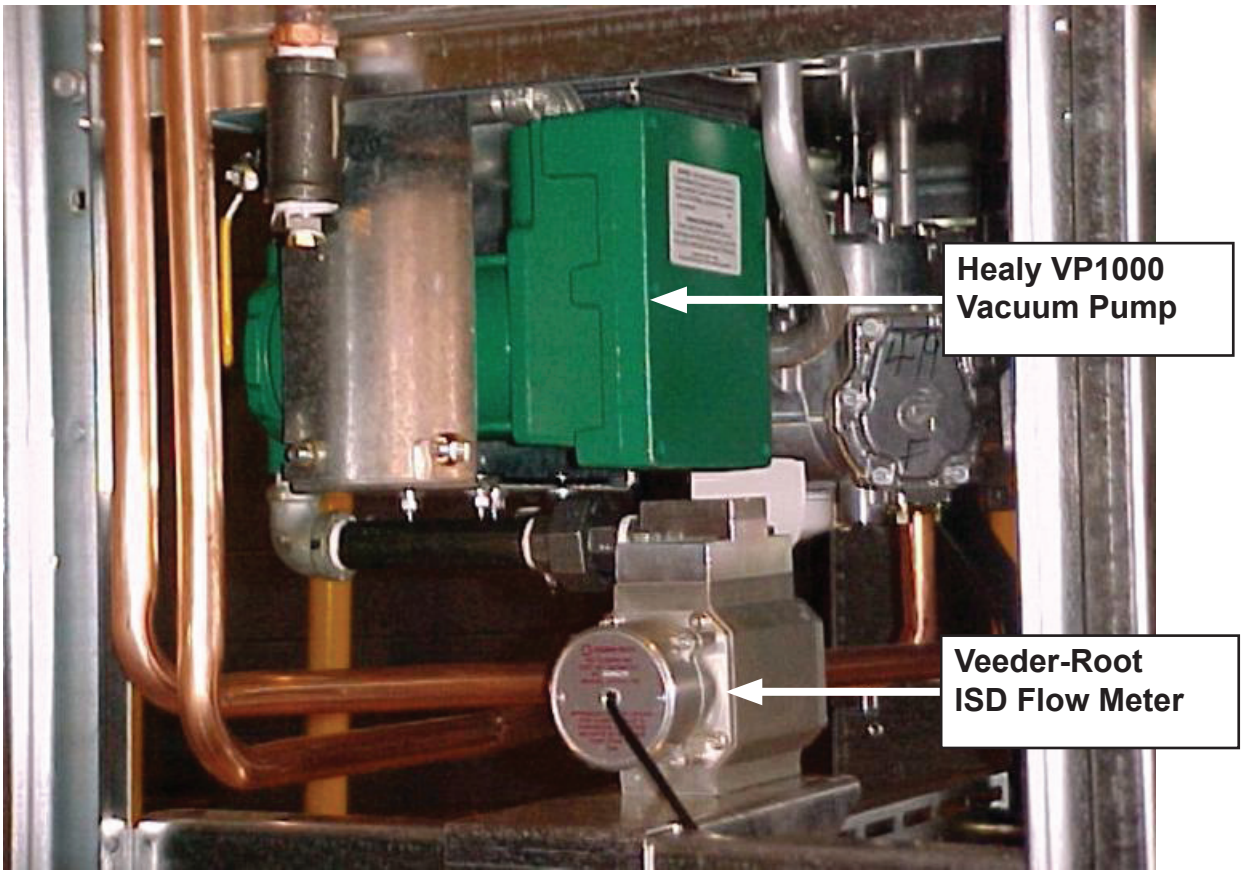

## 4. HEALY / ISD FLOW METER INSTALLATION PROCESS STEPS FOR KIT M07801S001

a. Power unit down

b. Remove lower doors. See Picture 001.

Picture 001

c. Remove outer column sheathing from both sides of the unit by removing 4 screws holding sheathing to frame. See Picture 002.

Picture 002

d. Remove upper housing top cover & lift brackets. See Picture 003.

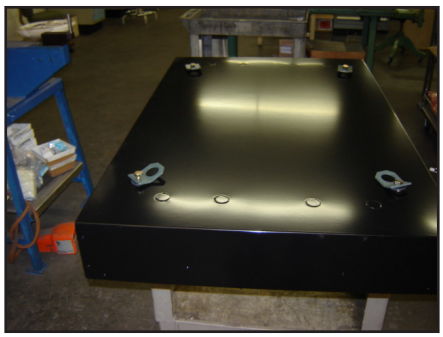

Picture 003

e. Remove balanced vapor down spout tube by removing u-bolt from bottom of tube on the inlet support rail. Unscrew the nut from the T–fitting in the top of the upper housing. Rotate the T–fitting 180 degrees. See Pictures 004, 005 and 006.

Picture 004

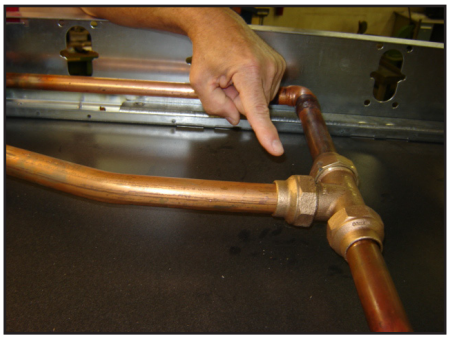

Picture 005

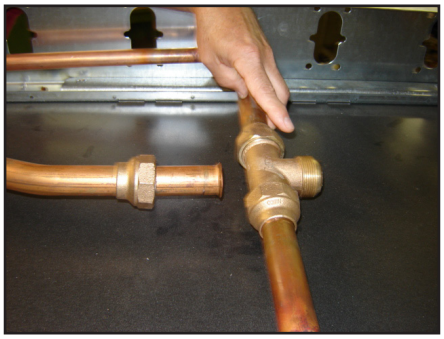

Picture 006

f. Install the new down spout tube to the opposite side of the unit from the previous tube. See Picture 007.

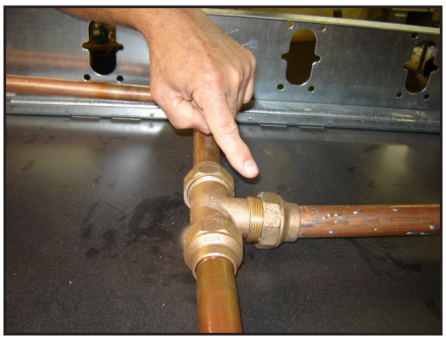

Picture 007

g. Open the Bezel door on “B “ side of the unit. See Picture 008.

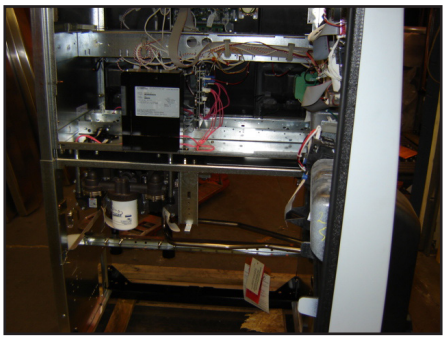

Picture 008

h. Remove the manifold blanking plate from the bottom of the cd module by removing (2) screws. See Picture 009.

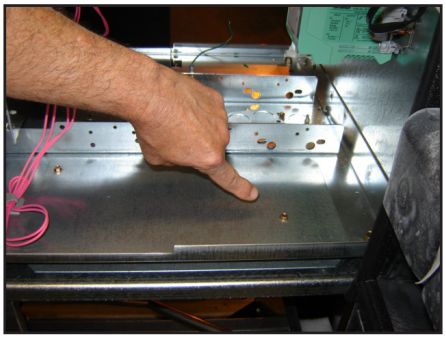

Picture 009

i. Remove the manifold blanking plate from the lower air gap plate by removing (2) screws. See Picture 011.

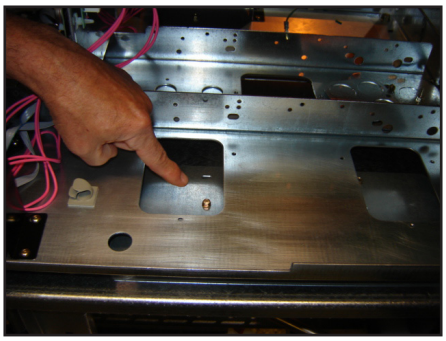

Picture 011

j. Place the Healy mounting plate in place on top of the lower air gap plate. See Picture 012.

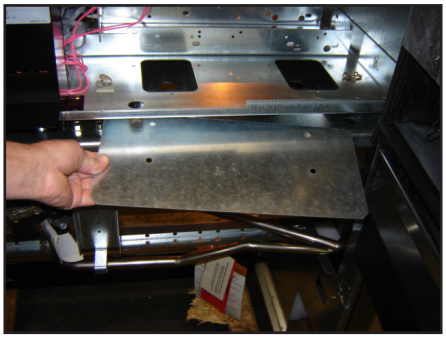

Picture 012

k. Pre-tap the (4) holes in the top of the Healy mounting brackets. Can use the 8 mm self tapping screws that are used to mount the Healy assy. to tap holes. See Picture 013.

Picture 013

l. Disconnect any cables coming thru the upper conduit plate located in the cd module the plate. Remove the upper & lower conduit plates by removing (2) screws from each plate. See Picture 014.

Picture 014

m. Remove the correct knockout from both conduit mounting plates using a hammer & flat head punch. See Picture 17 for correct hole location to knock out.

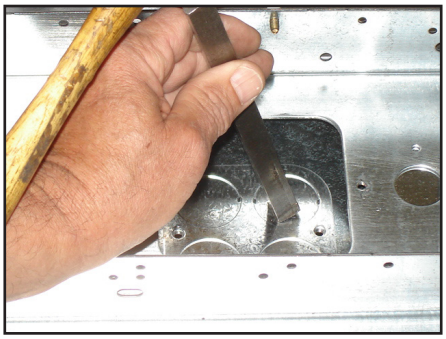

Picture 015

n. Remove the Auxiliary junction box from the Healy subassembly by removing the nut from the stud on the back of the box. Unhook the conduit & union assembly from the box by loosening the large nut on the union. See Pictures 016, 017.

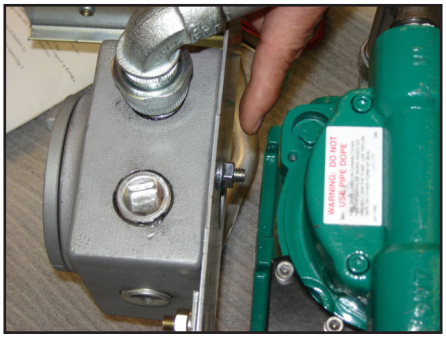

Picture 016

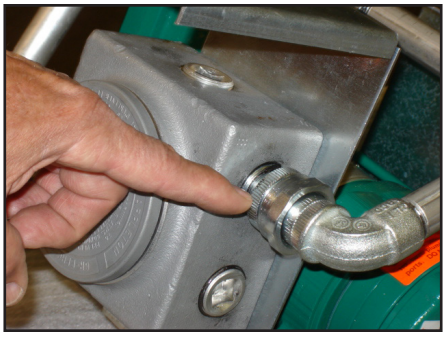

Picture 017

o. Locate the Healy subassembly below the lower air gap plate and secure it to the plate with (4) screws. You will have to feed the wires from the conduit thru the openings of the lower air gap plate & cd module. See Pictures 018, 019, 020.

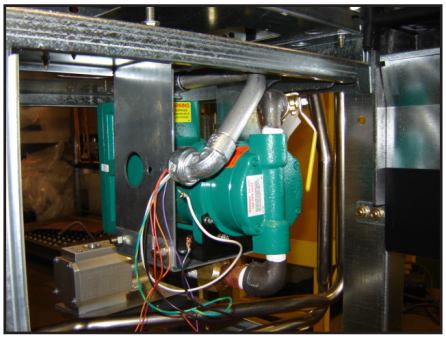

Picture 018

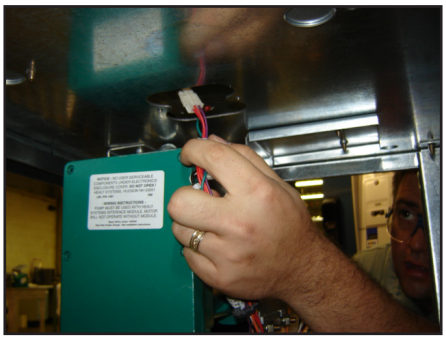

Picture 019

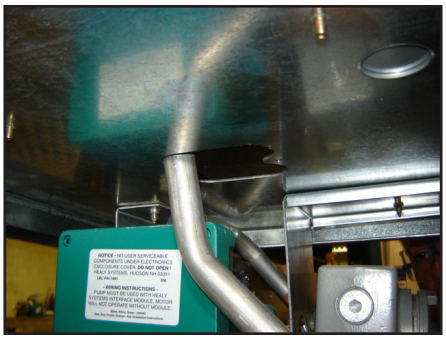

Picture 020

p. Connect the down spout tube to the Healy ball valve assy. by screwing the nut on the tube to the fitting on the ball valve and tightening. See Picture 021.

Picture 021

q. Reinstall the auxiliary junction box to the Healy sub assembly. Secure the box to the mounting bracket by installing a nut to the stud coming out of the back of the box. See Picture 022.

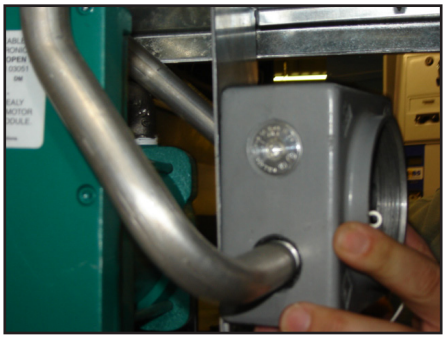

Picture 022

r. Feed the wires from the conduit & union assembly thru the opening in the box and reinstall the union to the box. See Picture 023.

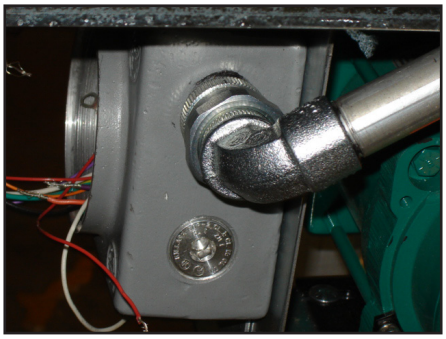

Picture 023

s. Install the conduit mounting plate to the lower air gap plate & install a conduit washer over the conduit coming thru the lower air gap plate from the Healy subassembly. Secure plate with 2 screws. See Picture 024.

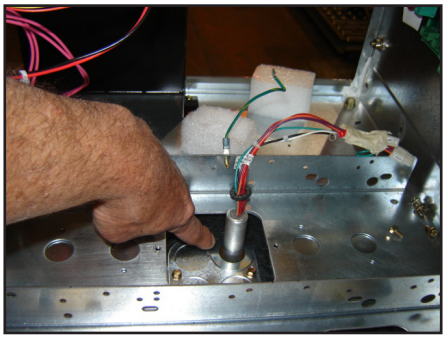

Picture 024

t. Reinstall the upper conduit knockout plate to the cd module using (2) screws. See Picture 025.

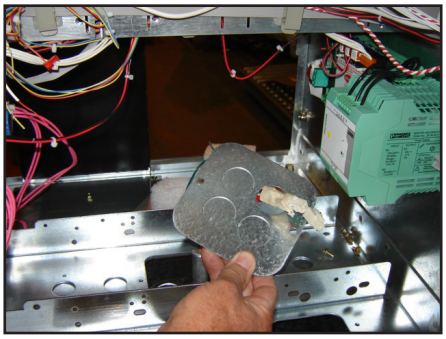

Picture 025

u. Install a washer over the conduit and reconnect any cables that you disconnected. See Picture 026.

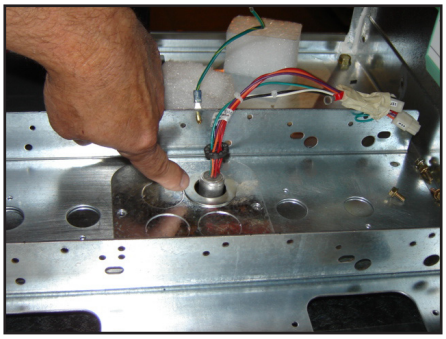

Picture 026

v. Install a Healy electronic module to the channel in the cd module and secure with a nut and screw. See Pictures 027, 028.

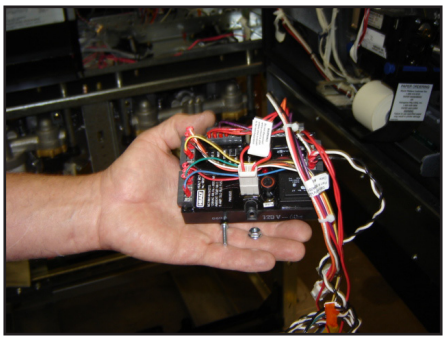

Picture 027

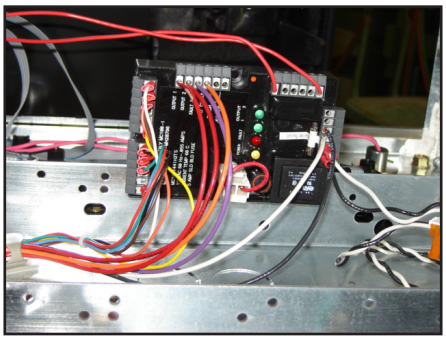

Picture 028

w. Install cabling to base electronics. See supplied documentation & Pictures 029, 030, 031.

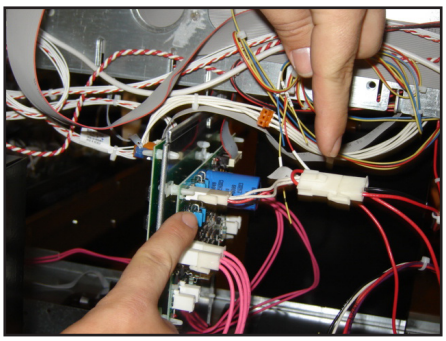

Picture 029

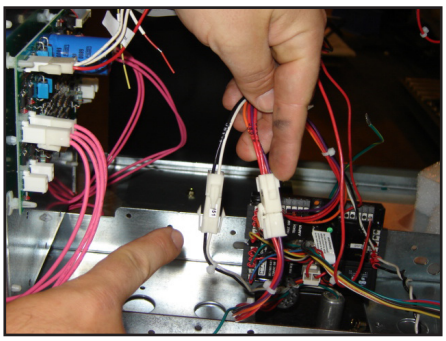

Picture 030

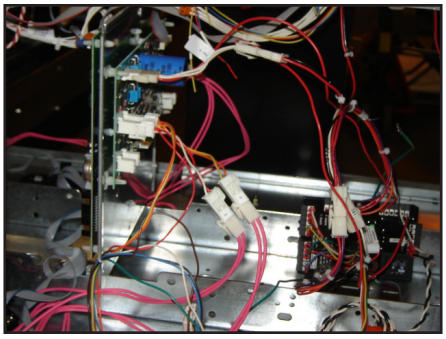

Picture 031

x. Place the ISD/Flow meter assembly over the top inlet support and the lip of the side column of the lower frame assembly. Secure with (1) 8mm screw. See Picture 032.

Picture 032

y. Slide the assembly into place and connect the flare fitting to the tubing nut coming from the Healy pump assy. Tighten the nut. See Picture 033.

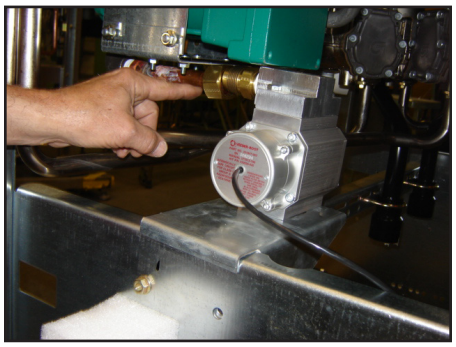

Picture 033

z. Connect the field connection piping to the bottom of the ISD assembly. See Picture 041 for adaptor to connect piping to.

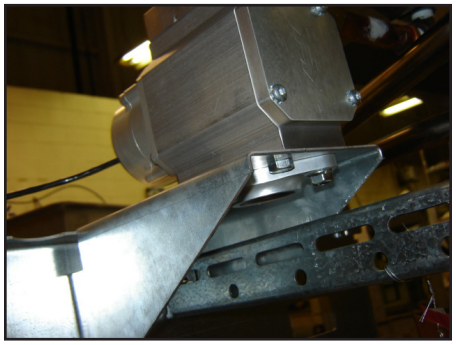

Picture 034

aa. Install the ISD pulser junction box assembly to the frame & secure with one screw. See Pictures 035, 036.

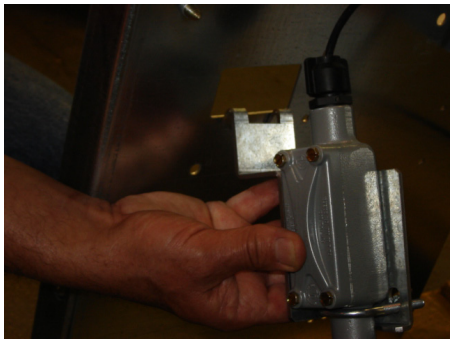

Picture 035

Picture 036

ab. Perform any required field wiring & run test if needed.

ac. Reinstall top cover & sheathing to unit. See Pictures 037, 038.

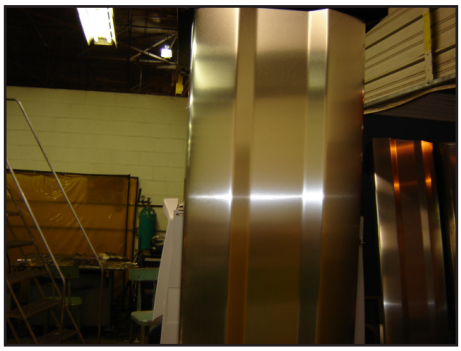

Picture 037

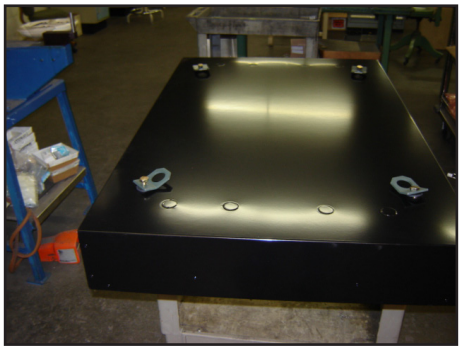

Picture 038

ad. Reinstall lower doors to unit & Close bezel door. See Picture 039.

Picture 039

START-UP/NEW INSTALLATION/ WARRANTY/ ANNUAL TESTING FORM (Rev. 10/07)
HEALY VP1000 VACUUM PUMP

Date_____

**BOTH SIDES OF THIS TEST FORM MUST BE COMPLETED FOR NEW INSTALLATIONS**

- **Start-up / New installations – complete SIDE A and sections 3, 4, 5 and 6 of SIDE B. Submit forms to Healy Systems.**
- **Warranty Service or Annual Testing – complete contact information, dispenser make, vacuum pump serial # and the tests in sections 1 and 2 on SIDE A and conduct the appropriate tests specified on SIDE B. Submit Forms to Healy Systems.**

| | | |
|---|---|---|
| SERVICE COMPANY NAME | TELEPHONE | |
| SERVICE TECHNICIAN | HEALY TECH CERT # | |
| STATION ADDRESS | CITY | STATE |
| **DISPENSER MAKE** | **VACUUM PUMP SERIAL #** | |

# SIDE A

| **DISPENSER EQUIPMENT CHECKLIST - Parts A-1 and A-2** | | **YES** | **NO*** |
|---|---|---|---|
| **A-1** | Is all the installed dispenser hanging hardware listed in Exhibit 1 of Executive Order VR-201 or VR-202? | | |
| **A-2** | Proper installation of the VP1000 requires the test port and ball valve on the inlet side of the vacuum pump. Are the test port and ball valve installed correctly? | | |
| | ***If the answer to either A-1 or A-2 is NO, the Healy Warranty is Void.** | | |

## A-3

- THE FOLLOWING TEST WILL PERFORM A POSITIVE PRESSURE LEAK CHECK OF THE VACUUM PUMP, DISPENSER VAPOR PIPING, HANGING HARDWARE AND ALL NOZZLES ON BOTH SIDES OF THE DISPENSER.
- THE VP1000 OUTLET IS NOT CONNECTED TO UNDERGROUND PIPING DURING THIS TEST.

**CAUTION: REGULATE GASEOUS NITROGEN TO 2.5 PSI (~70" WC) MAXIMUM BEFORE TESTING**

1. Install a 0-100 inch water column (" wc) mechanical gauge at the VP1000 test port.
2. Use the water column gage positive (high) pressure port.
3. Gaseous nitrogen gas can now be connected to the outlet (exhaust) port of the VP1000.
4. Test pressure **cannot** exceed 70" wc.
5. **Slowly** introduce the gaseous nitrogen to a pressure between 60 – 70" wc.
6. After reaching the pressure range, close the valve supplying the gaseous nitrogen.
7. Record the initial pressure reading on the gauge - observe and record the final pressure reading after 60 seconds.
8. Leaks must be repaired when the pressure falls more than 4" wc in 60 seconds.
9. Retest until all leaks have been repaired.
10. Record test results in Section A-4.

| **A-4**<br>**PRESSURE TEST**<br>**2.5 PSI (~70"wc) Maximum** | **Initial Pressure test reading ("wc)** | **Pressure test reading after 60 seconds ("wc)** |
|---|---|---|

START-UP/NEW INSTALLATION/ WARRANTY/ ANNUAL TESTING FORM (Rev. 10/07)
HEALY VP1000 VACUUM PUMP

Date_____

**BOTH SIDES OF THIS TEST FORM MUST BE COMPLETED FOR NEW INSTALLATIONS**

- **Start-up / New installations – complete SIDE A and sections 3, 4, 5 and 6 of SIDE B. Submit forms to Healy Systems.**
- **Warranty Service or Annual Testing – complete contact information, dispenser make, vacuum pump serial # and the tests in sections 1 and 2 on SIDE A and conduct the appropriate tests specified on SIDE B. Submit Forms to Healy Systems.**

# SIDE B

| *Warranty Service*<br>Complete Troubleshooting Sections<br>**B-1 and B-2** | *Start-up/ New Installations/ Annual Testing*<br>Complete Sections<br>**B-3 through B-6** |
|---|---|

## B-1

**Control Module Fault Light**

**(Circle one) Flashing (LED) Steady (LED)**

1. All fault conditions require removal and cleaning or replacement of the rotor and vanes located inside the vacuum pumps round front cover assembly. Use the **VP1000 ROTOR & VANE SERVICE AND REPLACEMENT GUIDE** in the applicable dispenser retrofit manual of the ARB Approved Installation, Operation and Maintenance Manual for Executive Orders VR-201-K and VR-202-K.
2. Clean all surfaces including vanes, rotor, rotor housing and cover assembly.
3. Manually spin and inspect the motor shaft for bearing wear before re-installing the rotor kit.
4. Replace motor when bearings or shaft are damaged or worn.
5. Check O-ring seal before replacing rotor cover assembly.

## B-2

Re-Assemble / Reset Vacuum Pump and Module. (Power must be removed from both the vacuum pump and the **module for 20 seconds to reset the system**) using the power reset switch on the MC100 module.

## B-3

Dispenser Vapor Line Integrity Test

1. Install 0-100 inch water column (“ wc) vacuum mechanical gauge at the VP1000 test port.
2. Authorize the dispenser for fueling. The VP1000 will begin to run.
3. Close the ball valve at the pump inlet.
4. Record the initial vacuum reading on the gauge – observe and record the final vacuum reading after 60 seconds.
5. Open the ball valve at the pump inlet.
6. Leaks must be repaired when the vacuum reading falls more than 4” wc in 60 seconds.
7. Retest until all leaks have been repaired.
8. Record data in Section B-4.

**Note: If the initial vacuum reading is less than 60” wc, it could indicate a problem with the VP1000. Remove the dispenser from service. Use the troubleshooting section of the manual to investigate problem or contact the FFS Technical Help Desk at 800-984-6266 for assistance.**

## B-4

| VACUUM TEST Using VP1000 as vacuum source | Initial Vacuum test reading (“ wc) | Vacuum test reading after 60 sec. (“ wc) |
|---|---|---|
| | | |

## B-5

Dispenser Vaacuum Test

With one side of the dispenser authorized (VP1000 running) and the ball valve at the pump inlet open, dispense in handheld position a minimum of 0.5 gallons of fuel into a vehicle or test tank. Record the vacuum level while dispensing. Repeat test for the other side of the dispenser.

1. Side “A” Dispensing Vacuum _____” wc
2. Side “B” Dispensing Vacuum _____” wc

**Note: If the dispensing vacuum is less than 60” wc, remove the dispenser from service. See the troubleshooting section of the manual or contact FFS Technical Help Desk at 800-984-6266 for assistance.**

## B-6

Audible Increase Test

Test the VP1000 Vacuum Pump for normal operation. Use the 6 step procedure titled, “Testing the VP1000 Vacuum Pump for normal operation using the following test procedure:” in Section 1.1 (Weekly Inspection and Testing) of the Healy Systems Scheduled Maintenance document in the ARB Approved Installation, Operation and Maintenance Manual for the Healy Phase II EVR System not Including ISD. This is to verify that the pump recognizes when both sides of the dispenser are activated for fueling.

Does the VP1000 Vacuum Pump change speeds (audible increase) when both sides are activated for fueling?

Yes No

If the answer is no, **use the troubleshooting section of the manual to investigate problem or contact the FFS Technical Help Desk at 800-984-6266 for assistance.**

| Repairs - Comments | To Obtain Returned Materials Authorization number (RMA#) Call 800-984-6266<br>Forms can be faxed to Franklin Fueling Systems Customer Service at 800-225-9787 |
|---|---|

# GASBOY 9800 SERIES
# DISPENSER RETROFIT for HEALY SYSTEMS, INC.
# MODEL VP1000
# VAPOR RECOVERY ASSIST SYSTEM

**(KIT Z081)**

## OUTLINE

This Manual is to be used for new, replaced, retrofitted, or reconditioned dispensers/pumps.


1. **Purpose**
2. **Safety**
3. **Models Covered**
4. **Parts Lists**
5. **Tools Required**
6. **Dispenser Access**
7. **Survey Scope of Work**
8. **Installing The Healy VP1000 System**
9. **Installing The Sealed Nipple Assembly**
10. **Connecting Vapor Lines**
11. **Wiring Inside The Electronics Compartment**
12. **Connecting Healy Systems Dispensing Equipment**
13. **VP1000 Theory Of Operation**
14. **Testing The System**
15. **Trouble Shooting The VP1000**
16. **VP1000 Vane & Rotor Service & Replacement Guide**

**Start-up/ New Installation/ Warranty/ Annual Testing Form**



Franklin Fueling Systems
3760 Marsh Road
Madison, Wisconsin 53718 USA
ARB Approved Installation, Operation and Maintenance Manual

Website: http://www.franklinfueling.com
Email: sales@franklinfueling.com
Telephone: 800-225-9787
Fax: 608-838-6433


HEALY

Franklin Fueling Systems

**1. PURPOSE:**

**This procedure describes the tools, methods and skill levels required to install a Healy Systems, Inc. Model VP1000 Vapor Recovery pump in non-vapor ready Gasboy™ model 9800 series gasoline dispensers. Only Healy trained and certified contractors will be able to perform these retrofits or warranty will be void. The installer shall be a skilled petroleum technician and thoroughly familiar with the requirements of State, Federal and local codes for installation and repair of gasoline dispensing equipment. Also, they shall be aware of all the necessary safety precautions and site safety requirements to assure a safe and trouble free installation. NOTE: All electrical and hydraulic plumbing fittings referred to in these instructions must be UL "listed" or "recognized" for the purpose.**

**Note:** Installations of vapor piping into the inlet side of the vacuum pump should be sloped such that the natural flow direction is toward the vacuum pump. However, it is permissible to have a piping slope tilted away from the vacuum pump provided that all other applicable tests (Dispenser integrity and V/L) meet the specifications outlined in the appropriate section of the Executive Order and ***ARB Approved Installation, Operation and Maintenance Manual***.

**Note:** For installations with In-Station Diagnostics (ISD), the vapor flow meter shall be installed on the down stream side of the vacuum pump. Every effort shall be made to install the vapor flow meter so that vapor piping between the vacuum pump and the vapor flow meter is sloped such that the natural flow direction is toward the vapor flow meter. However, it is permissible to have the piping slope away from the vapor flow meter provided that all other applicable tests (Dispenser integrity, V/L and ISD Operability) meet the specifications outlined in the appropriate section of the Executive Order and ***ARB Approved Installation, Operation and Maintenance Manual***.

**2. SAFETY: Before installing the equipment, read, understand and follow:**

**- The National Electrical Code (NFPA 70)**

**- The Automotive and Marine Service Code (NFPA 30A)**

**- Any national, state and local codes that may apply.**

**The failure to install the equipment in accordance with NFPA 30A and 70 may adversely affect the safe use and operation of the system.**

**Accurate, sound installations reduce service calls: Use experienced, licensed contractors that practice accurate, safe installation techniques. Careful installation provides a sound troubleshooting framework for field repairs and can eliminate potential problems.**

**1. Read all instructions before beginning.**

**2. Follow all safety precautions:**

- **Barricade the area.**
- **Do not allow vehicles or unauthorized people in the area.**
- **Do not smoke or allow open flames in the area.**
- **Do not use power tools in the work area.**

- **Wear eye protection during installation.**

**3. Use circuit breakers for multiple disconnects to turn off power and prevent feedback from other dispensers.**

## 3. MODELS COVERED:

**Gasboy 98XXQX all suffix except I, S, 2, 3, 25, 35 & 9 gasoline dispensers. The addition of the Healy Systems VP1000 to the 98xx's will increase the current draw of the dispenser by 2 amps. Use the label supplied to note this change. This kit will retrofit a two hose unit: if single hose, a sealed cap is provided to close off one side.**

**NOTICE: BE SURE NOZZLE HOOK AND HOOD IS THE CORRECT ONE FOR A VAPOR RECOVERY NOZZLE AND HAS TO BE SPECIFICALLY ORDERED.**

## 4. PARTS LISTS: (See Photo A)

**1 VP1000 Vacuum Pump**

**1 1374A Wire Harness / MC100 Series Interface Module Assembly**

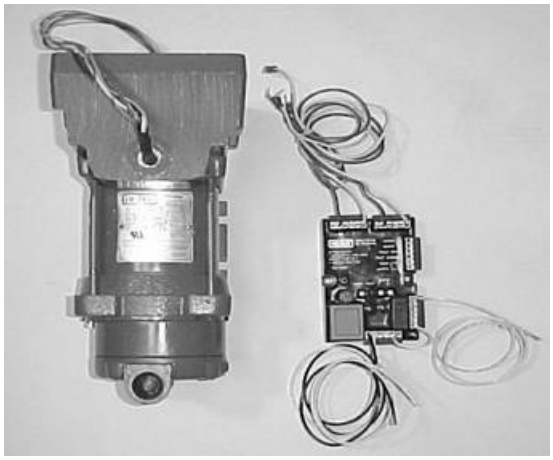

**PHOTO A**

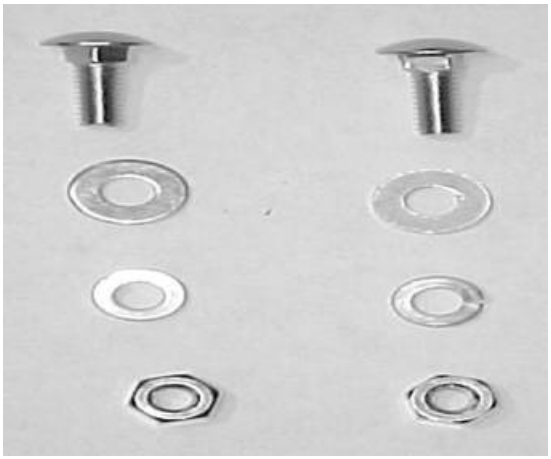

**PHOTO B**

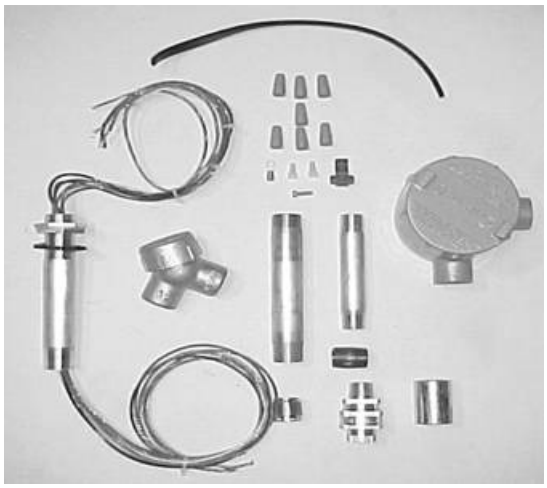

**PHOTO C**

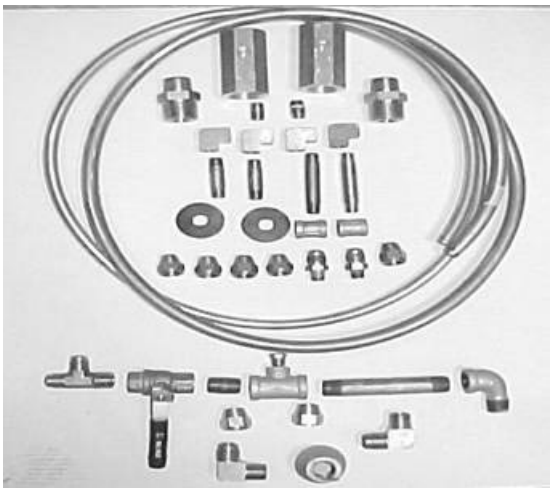

**PHOTO D**

**HARDWARE KIT Z081H: (See Photo B)**

| | |
|---|---|
| 2 | 1/4-20 bolts, washers, lock washers and nuts |

**ELECTRICAL KIT Z081E: (See Photo C)**

| | |
|---|---|
| 1 | Current change label (p/n 1405) |
| 9 | Wire nuts |
| 1 | 8-32 x 5/8” machine screw |
| 1 | 3/4” electrical coupling |
| 1 | #1316 potted conduit nipple |
| 1 | #8 Ring tong terminal |
| 1 | Notice label (p/n 1406) |
| 1 | UL Listed label (p/n 1410) |
| 1 | 1/2” electrical capped elbow |
| 1 | 3/4 ” x 1/2 “ electrical reducing bushing |
| 1 | 1/2” electrical close nipple |
| 1 | 1/2” electrical union |
| 1 | 1/2” x 4-1/2” electrical nipple |
| 1 | 3/4” x 6” electrical nipple |
| 1’ | rubber channel grommet |
| 1 | Explosion proof junction box |
| 1 | Scotch-Loc connector (RED) |

**VAPOR KIT Z081V: (See Photo D) – assumes 2 hose unit**

| | | | |
|---|---|---|---|
| 2 | 1/4” NPT X 1/2” flare straight fittings | 2 | 1/4” NPT couplings |
| 4’ | 1/2” OD copper tube, type ‘L’ | 2 | 1/4” close nipple |
| 2 | 1/4” x 2” nipple | 2 | 1/4” x 3” nipple |
| 1 | 1/2” x 1/4” x 1/2” reducing tee | 1 | 1/2” ball valve |
| 1 | 1/4” pipe plug | 4 | 1/2” flare nuts |
| 1 | 1/2” NPT x 1/2” x 1/2” flare tee | 1 | 1/2” flare cap |
| 1 | 1/2” street elbow galvanized | 4 | 1/4” elbows |
| 1 | 1/2” x 5” galvanized nipple | 1 | 1/2” close nipple |

| | | | |
|---|---|---|---|
| **2** | **CX6-A Healy hose adaptor (splitter fitting)** | **2** | **5/8” flare nuts** |
| **2** | **1” NPT x ¾” NPT male/male adaptor** | **1** | **1” x 1/2” bell reducer** |
| **2** | **Hole mask washers (self adhesive)** | **3’** | **5/8” OD copper tube, type ‘L’** |
| **2** | **1/2” NPT x 5/8” flare elbow fittings** | | |

**MATERIALS SUPPLIED BY INSTALLER:**

**Thread Sealing Compound – non-Setting, UL Classified for use on all tapered thread, non-electrical, plumbing fittings.**

**Teflon tape**

**<u>Non flammable drape (to cover mechanical parts while drilling holes)</u>**

**5. TOOLS REQUIRED:**

- **1/2” or 3/8” ratchet set w/ sockets 1/4” through 9/16” + 3” extension**
- **9” lineman’s pliers**
- **Assorted open end wrenches 1/4” through 3/4”**
- **Wire cutters/strippers 18 AWG and 26 AWG**
- **1-1/8” Greenlee type sheet metal punch**
- **Mechanical hand drill (egg-beater type)**
- **Assorted drill bits 1/16” through 7/16”**
- **Assorted screwdrivers (flat blade-one must be 1/8” wide and Phillips)**
- **1/2” copper tube bending tool**
- **1/2” copper tube flaring tool**
- **5/8” copper tube bending tool**
- **5/8” copper tube flaring tool**
- **Copper tubing cutter**
- **Electrical multi-meter**
- **Small hand brush (1-1/2” thick, for clearing chips)**
- **12” adjustable wrench**
- **10” pipe wrench**
- **Tape measure**
- **Allen wrenches**

**6. DISPENSER ACCESS: (See Photo E)**

- **Secure Dispenser Access keys from Station Management.**
- **Lock-out and tag-out all electrical power to dispenser being modified.**
- **Remove both lower dress panels.**
- **Remove both upper bezels**
- **Remove the top sheet metal assembly.**
- **Remove the 4, 5/16 – 18 nuts and washers holding the top electrical chassis to the vapor barrier. Retain for reinstallation later in procedure.**

## WARNING

**This retrofit kit requires drilling in a Hazardous Location. Insure that all power to the dispenser has been turned off. Open all access doors for increased airflow. Use only sharp drill bits; dull bits may generate excessive heat. Use air powered drill at low RPM's. If an electric drill is used, a suitable UL Listed Gas Detector must be used to ensure the area is below 25% of the Lower Explosive Limit. Do not drill if gasoline odors are present.**

**If drilling in the electronics cabinet, carefully collect and remove all metal shavings that may be inside the cabinet. Failure to remove the shavings could result in an electrical shock hazard. Before drilling, check to ensure that no wires or fluid containing parts (i.e. product tubing) is located on the backside or near the chuck of the drill.**

**7. Survey – Scope of Work:** ***Perform this step before beginning steps 8 thru 12.***

**Read and familiarize yourself with the theory of operations sheet and wiring instructions for the VP1000 Vapor Pump. The installation of the pump is on the sheet metal shelf under the meters on the side opposite the electrical 'J' box in the free space on the right hand side, see photos F & G. From this survey, you will have an indication of where the vapor plumbing fittings need to go and where the holes need to be drilled in the adjoining sheet metal to allow the vapor pipes from the pump to pass through the side skins to the hydraulics compartment. The Healy potted conduit nipple is installed under the upper electronics chassis in a 1 1/8" hole that needs to be drilled through the sheet metal panels. See Photo H and Section 9.** ***CAUTION:*** ***ALL POWER TO DISPENSER UNDER MODIFICATION SHOULD BE COMPLETELY DISCONNECTED AND CAPPED OFF AT JUNCTION BOX TO AVOID UNINTENTIONAL FEEDBACK FROM OTHER DISPENSERS!!***

***Photo E***

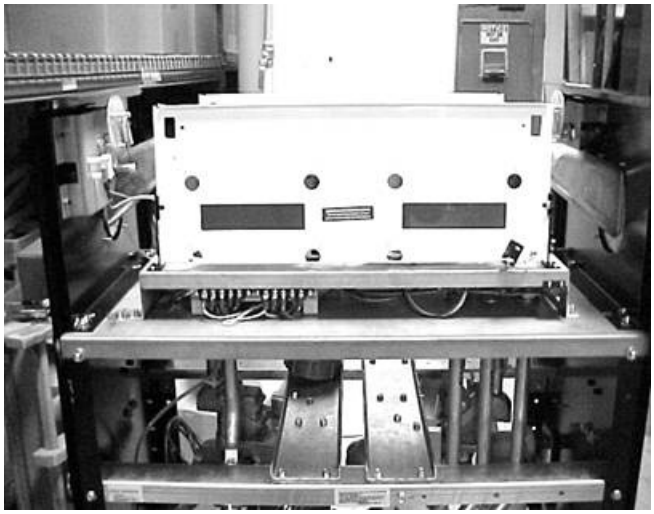

***Photo F***

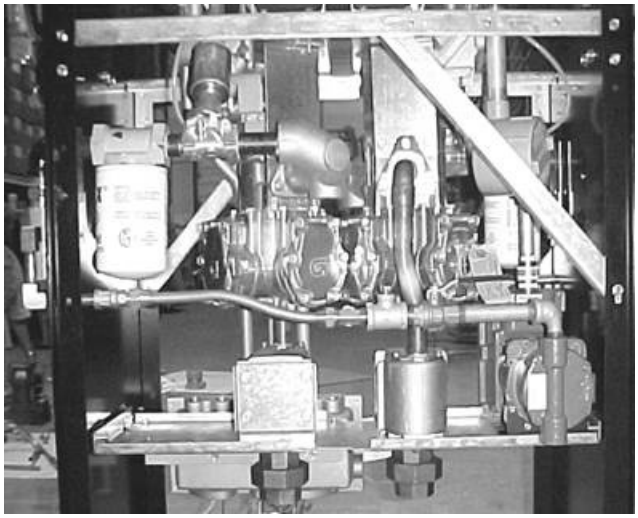

***Photo G***

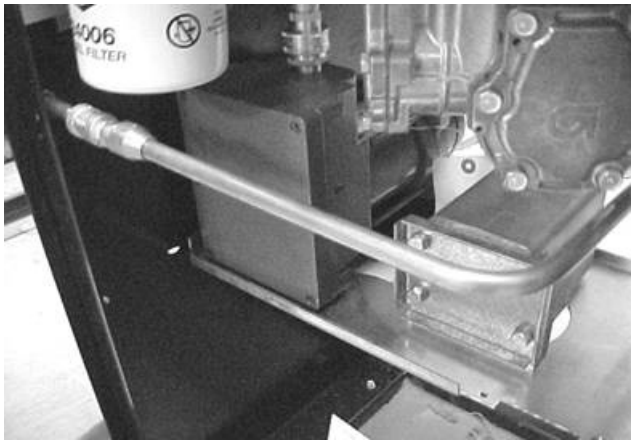

***Photo H***

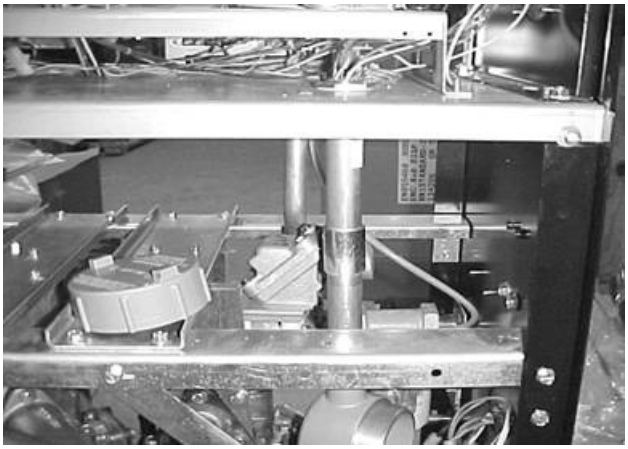

**8. INSTALLING THE HEALY VP1000 SYSTEM:**

**NOTICE: WHEN DRILLING HOLES, ASSURE THAT THERE ARE NO HAZARDOUS VAPORS PRESENT AND DO NOT ALLOW CHIPS TO FALL DOWN INTO THE HYDRAULICS AREA.**

- **In order to make the vapor connection from the CX6-A hose adaptor installed outside the cabinet to the VP1000 pump installed inside the cabinet, it is necessary to drill or punch a 7/8” hole see photo I. Measure 1-1/4” to the left of the right edge of the side panel, make a small line. Measure 20-5/8” up from the bottom edge of the side panel (NOT THE BASE OF THE DISPENSER), make a small line forming a cross and drill or punch the 7/8” hole. Repeat on other side if a dual hose unit.**
- **In order to make the electrical connections from the VP1000 pump which will be installed in the meter area to the upper electronics compartment where the interface module is mounted a 1-1/8” hole has to be made.**

- **Before beginning this step, place a nonflammable, flexible drape over the meter and encoder gears to prevent chips from the following drilling operation from falling into the gear mechanisms.**
- **Carefully lift the previously loosened electronics chassis from the mounting bolts and position toward the electrical 'J' box side of the cabinet about 5" from the edge of the shelf and set down.**
- **In line with the sealed nipple going to the meter encoder and 4-1/2" in from the edge of the chassis drill or punch a 1-1/8" hole to mount the 3/4" sealed nipple assembly, see photo J.**

**Photo I**

**Photo J**

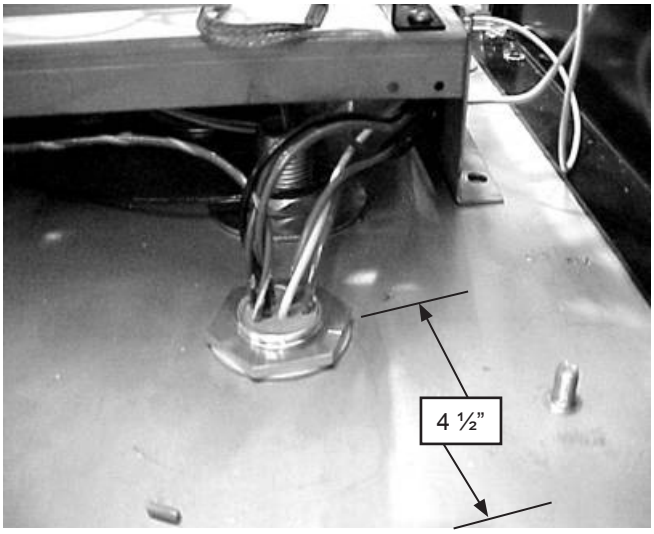


- **Position the VP1000 pump on top of the sheet metal shelf on the right end, on the side opposite the main electrical 'J' box, see photo F & G.**

**9. Installing the sealed nipple assembly.**

- **Reposition the chassis to better expose the rectangular cutout in the side of the chassis. Surround this hole with rubber gasket material supplied, see photo K.**
- **Install the sealed nipple by carefully removing the first nut and washer, then slide the wires up, through the 1 1/8" hole and reinstall the washer and nut. Be sure at least one full thread is showing over the nut but not more than two threads and tighten the nuts securely, see photo J.**
- **Gather the upper wires and put through the grommeted opening in the chassis, from under the chassis and reposition the chassis on it's mounting studs. Check to be sure no wires are trapped under the edges of the chassis – do not re-install the mounting hardware at this time, see photo K.**

- **Below the top shelf, slide a 3/4” electrical coupling over the wires from the nipple, followed by the 3/4” x 6” electrical nipple. Secure these connections, see photo L.**
- **Remove the cover on the electrical junction box supplied and feed the nipple wires into the box until the box and nipple contact, then slowly rotate the box at least five turns before positioning the remaining conduit hub to the rear, towards the pump motor.**

**Photo K**

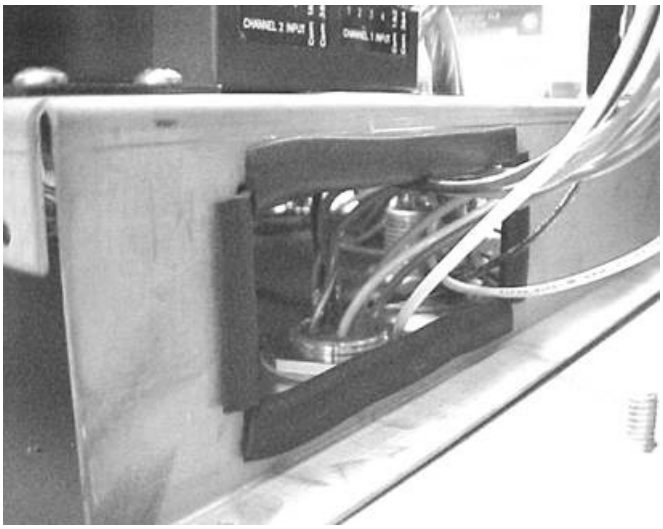

**Photo L**

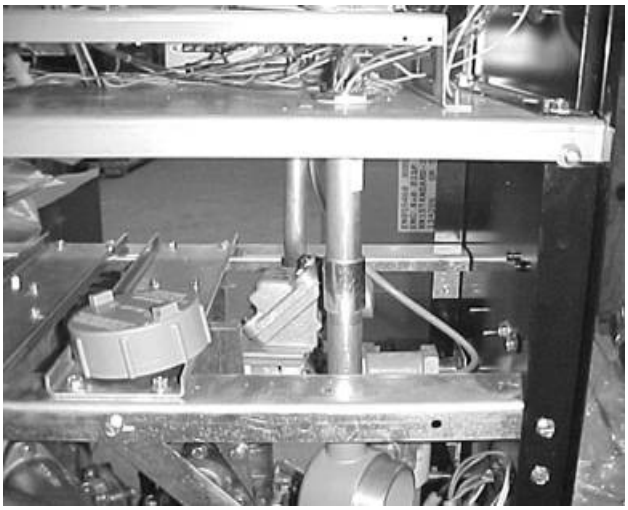

- **Remove the cover from the capped elbow and install a 1/2” close nipple into one of the conduit hub openings. To this nipple, add a 1/2” x 3/4” electrical reducing bushing. Install this completed assembly into the open conduit hub on the junction box installed above, see photo M.**
- **Install the female half of the electrical union on to the 1/2” x 4-1/2” electrical nipple, then install the nipple into the open conduit hub on the capped elbow.**
- **Thread the motor wires through the male half of the electrical union and install the part into the motor, see photo O.**
- **Carefully thread the motor wires up through the 4-1/2” nipple, into the capped elbow. Pull the wires tightly as the two halves of the union are aligned and screw down the securing collar. Be sure no wires are pinched between the two halves of the union.**
- **Push the motor wires through the capped elbow into the junction box and replace the cover on the capped elbow.**
- **Leave about 6” of wire on each piece in each bundle of wires, then strip all wires 3/8” and join, color for color using wire nuts supplied. Replace the cover, see photo N.**

**Photo M**

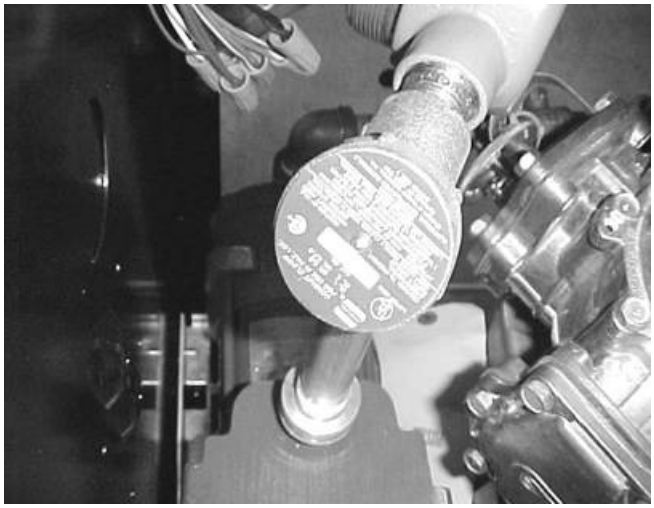

**Photo N**

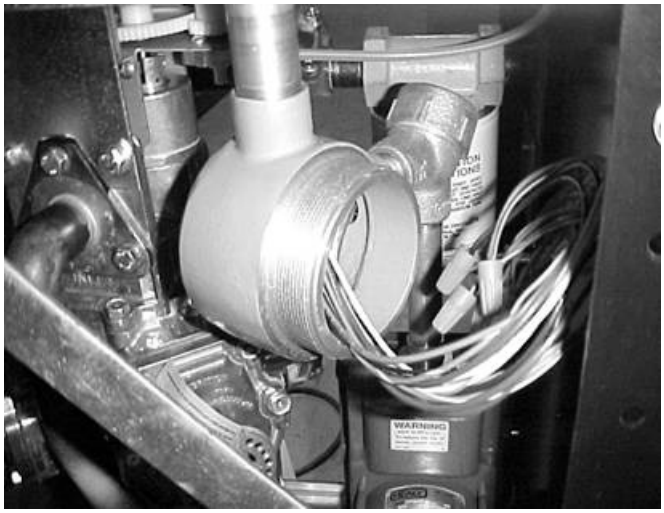


**Photo O**

**Photo P**

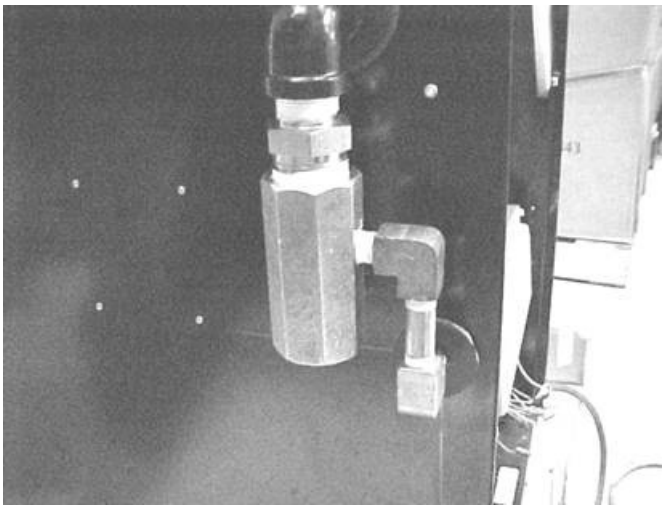

**10. CONNECTING VAPOR LINES: (See Photos F, G, P, Q & R)**

- **Apply pipe sealant to the threads on the 1” x 3/4” male threaded nipple and install the 3/4” end into the product outlet on the dispenser. Note: Gasboy has an alternate 1” discharge fitting. If so equipped, installer will need to supply their own 1” x 2” nipple to install the Healy CX6-A splitter fitting. Do both sides if dual hose.**
- **Install the CX6-A splitter adaptor to the 1” threaded portion of the nipple and tighten both securely, with the final turn positioning the 1/4” vapor outlet of the CX6-A facing the closest edge of the cabinet. Do both sides if dual hose, see photo P.**

- **Note: Use Teflon tape on the following steps.**
- **Assemble a 1/4” close nipple and elbow to the vapor hole in the CX6-A adaptor. Position the elbow to face downward. Do both sides if dual hose.**
- **Assemble the 1/4” x 2” nipple into elbow and then attach another elbow, positioned to face the cabinet wall when tightened. Do both sides if dual hose.**
- **Install the 1/4” x 3” nipple from inside the cabinet slide the nipple through the cabinet, toward the elbow but slide on the hole mask washer (white paper towards cabinet) between the outside of the cabinet and the elbow fitting. Do both sides if dual hose, see photos P & Q.**
- **Install the 1/4” coupling to the 1/4” x 3” nipple and then install a 1/4” NPT x 1/2” flare straight fitting in the coupling – tighten securely. Do both sides if dual hose, see photo Q.**
- **Remove the white protective tape from the hole mask washer installed above and press adhesive surface against cabinet. Do Both sides if dual hose.**

**Photo Q**

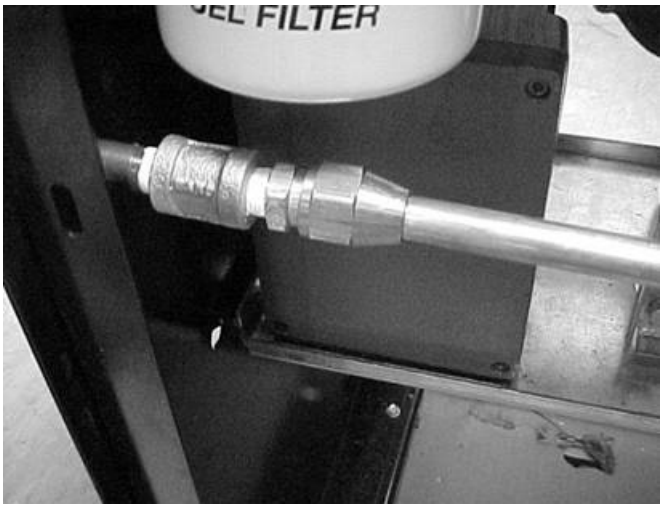


**Photo R**

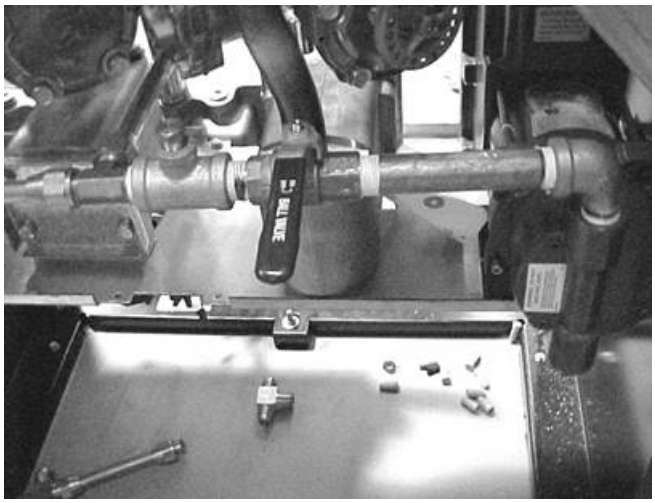

- **Note: Use Teflon tape on the following steps.**
- **Install the 1/2” street elbow to the inlet of the pump, tighten to face left, see photo R.**
- **Install the 1/2” NPT x 5” nipple to the elbow above. Install and tighten the 1/2” ball valve such that when the handle is closed, it points toward the outside of the cabinet.**
- **To the ball valve, install a 1/2” close nipple and the 1/2” x 1/4” x 1/2” reducing tee. Completely tighten with the 1/4” opening facing up.**
- **To the tee, install the 1/4” NPT plug and the 1/2” NPT x 1/2” x 1/2 ” flare tee. NOTE: If upgrade is being done on a single sided dispenser, install the 1/2” flare cap provided, onto the remaining tee opening.**

- **Make up a piece of 1/2” OD copper tube that will go from the flare tee on the ball valve to the straight flare fitting on the coupling leading to the CX6-A fitting outside the cabinet, see photo F.**
- **Refer to photo G for the next piece of 1/2” OD tube that is run from the CX6-X fitting on the other side of the dispenser. Carefully bend the piece to fit between the two meters and line up with the remaining port on the tee on the motor inlet plumbing.**
- **The vacuum pump is now well contained by both the electrical and vapor plumbing. If further fastening is required, drill two 5/16” holes up from below the center panel and through the mounting plate on the VP1000. Secure the pump with the nuts and bolts supplied.**

## 11. WIRING THE ELECTRONICS

- **Remove the screws from the two indicator/display panels and allow to lay flat.**
- **The interface module assembly will be mounted on top of the electronics chassis in the space at the right rear corner looking from the non ‘J’ box side of the dispenser. Before mounting, however, the red “DANGER” must be relocated about 5” to the left. Also, it is easier to make the wire connections with the module lifted up rather than secured to the chassis, see photo S.**
- **Loosely position the module on the electronic chassis, see photo S, dress the wires coming from the sealed nipple assembly over to the module leave at least six inches longer than necessary to reach the terminal boards on the module. Cut off excess and strip all wires 1/2”.**

**Photo S**

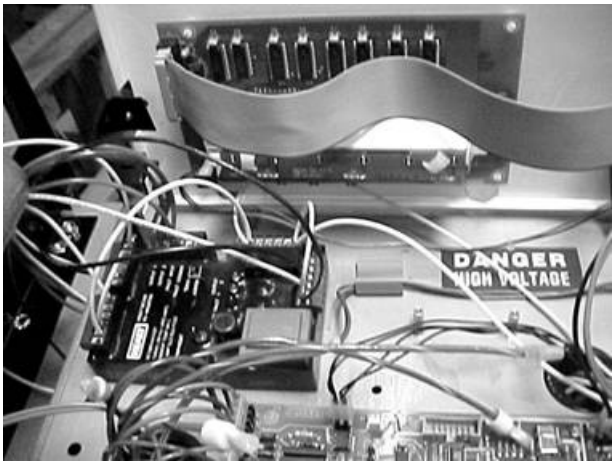


**Photo T**

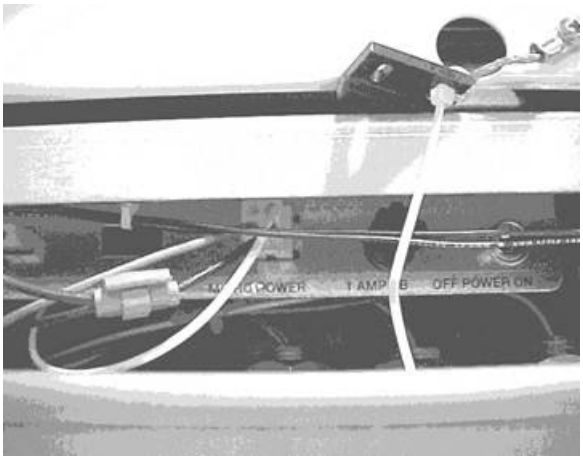

- **Connect the wires from the sealed nipple to the interface module as follows: NOTE: Make sure the module screws contact the wire not the insulation.**
  - **Black wire to 'motor ' on module**
  - **White wire to 'neutral' on module**
  - **Red wire (either) to 'output 1' on module**
  - **Red wire (other) to 'output 2' on module**
  - **Orange wire to 'fault common' on module**
  - **Purple wire to 'fault input' on module**
  - **Green wire needs a #8 ring tong lug (provided) installed and connected to any chassis ground (frame)**
  - **Some sealed nipples may have extra wires, cap these and bundle them neatly out of the way.**
- **The single black wire on the module is routed down through the center black grommet hole and to the far side of the upper deck. Locate the black/green/white wire set from the factory installed sealed nipple that go to the switch bracket assembly and are marked "MICRO POWER". Select the black wire in the connector and Scotch-loc™ the black wire from the module to the black wire in the connector, see photo T.**
- **The input signal wire connections are made to the valves terminal board under the electronics chassis. Route the yellow and red twisted pair (2 sets) of wires from the module through the rectangular hole containing the motor wires under the chassis to the valves terminal strip. Attach one set (yellow and red twisted pair) to one valve, and the other set to the other valve. The yellow and red wires supplied, with the terminals attached are screwed, one on each, on top of the existing yellow wires and red wires on each of the valve terminal boards. Be sure to keep the red and yellow pairs together on the same valve.**
- **To obtain the electrical neutral connection for the module and motor requires interrupting the white (neutral) wire going to the three wire (5-position) connector on the Micro board. The module is supplied prewired with two white wires, one going to neutral on the power input strip on the module and the other going to pin location 1 on the disconnect relay. There is also a small white jumper going from pin 6 of the disconnect relay to a neutral on the power input strip.**
- **Get the white wire going to the power input strip and strip 3/8" off the end. Locate the white wire going to the MICRO connector and cut the wire, leaving about 1-1/2" going to the MICRO connector and the wire going back through the hole under the chassis. From the wire going under the chassis, strip 3/8" and connect to the previously stripped white wire going to power neutral. Use a wire nut supplied to secure and insulate the connection.**
- **Get the white wire going to pin 1 on the disconnect relay and strip 3/8" off the end. At the MICRO board, strip 3/8" off the other white wire in the connector and join with the first white wire. Secure with a wire nut supplied.**

**Photo U**

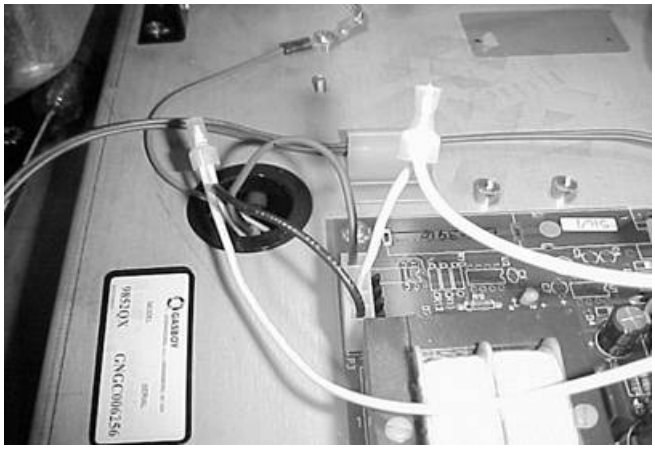

**Photo V**

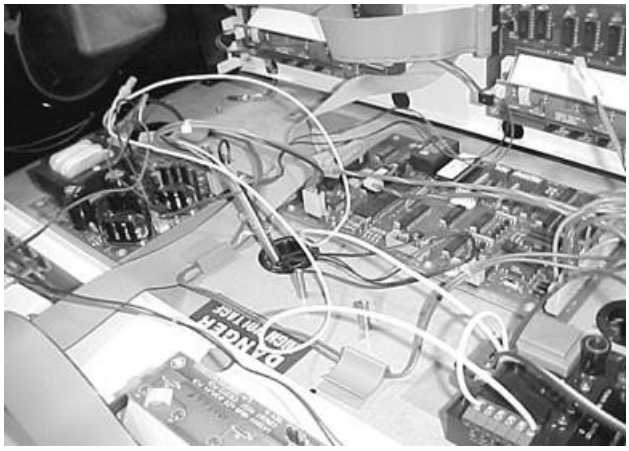

- **Mount the interface module as shown in photo S using the 8-32 x 5/8” screw, supplied in the electrical kit. There is an existing hole in the chassis that is the right size and in the right place for the thread cutting screw.**
- **Install the following labels supplied:**
  - **NOTICE label for current increase, install on the inside of the cabinet panel near the existing power consumption label, see photo W.**
  - **Large NOTICE label relating to the vapor recovery upgrade and how to reset the electronic module should be installed near the module, where it will be readily visible to a service technician on the inside of the cabinet near the nozzle spout housing, see photo X.**
  - **UL, retrofit kit identification number, install near the electronic module.**

**Photo W**

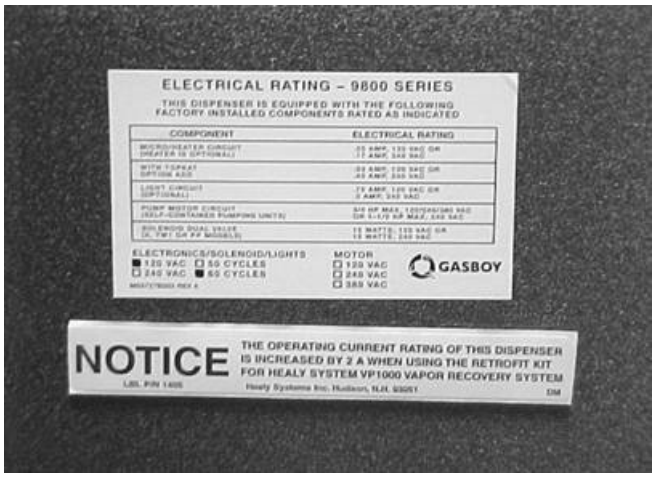


**Photo X**

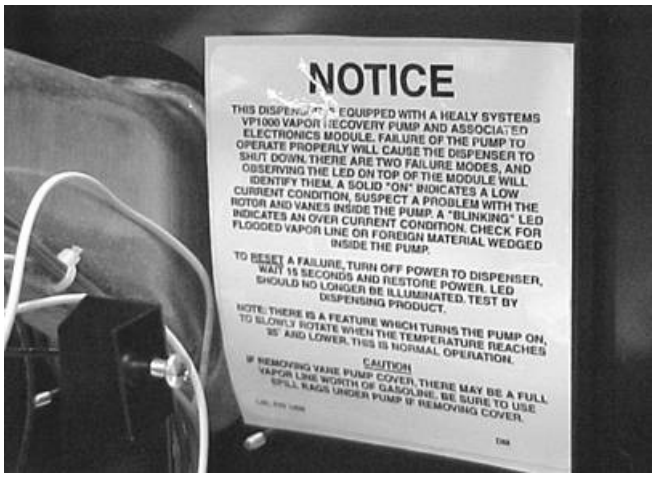


- **Replace the screws holding the indicator/display panel in place, the nuts and washers holding the electronics chassis to the vapor barrier and replace the top cover.**
- **Replace the two bezels and lower cabinet doors.**

## 12. CONNECTING HEALY SYSTEMS DISPENSING EQUIPMENT

- **Completing the connection of Healy Systems dispensing equipment requires the installation of Healy Systems Phase II dispenser adaptors, hoses and nozzles (Hanging Hardware).**
- **If applicable, remove existing non-Healy hanging hardware (from the dispenser product outlet adaptor to and including the nozzles).**
- **Healy Vapor Recovery Hoses are available in various lengths to satisfy local ordinances and still provide "far side" fueling capability. Install these following instructions contained on the shipping box.**
- **Breakaways are required: Install either Model 8701-VV breakaway or Model 807 swivel breakaway; install using the instructions supplied with the unit.**
- **The Healy Systems nozzle Model 900 (EVR) is the only nozzle necessary to complete the upgrade. Check to be sure the nozzle hanger is mounted in the highest position. Be sure to check for proper fit in the nozzle holster and that the nozzle can be locked in the off position. Also, be sure that when the nozzle is locked, that the dispenser cannot be activated from the locked position.**

## 13. VP1000 Theory of Operation

**The Healy Systems VP1000 is a self-contained rotary vane pump, designed for gasoline vapor recovery utilizing various parts of the Healy System Vapor Recovery product line. It is intended for use by either OEM dispenser/pump manufacturers or as an after market add-on to make existing equipment compatible with Healy System technology. In order to convert to 'others' equipment, an electronic interface is required to adapt the targeted pump/dispenser to the new vapor recovery equipment. The interface senses when authorization to dispense has been given and sends signals to the motor to operate at a low speed for one hose, or a higher speed for two hoses. It also functions to shut off the pump/dispenser if it senses that the vapor pump is not operating properly. The vacuum is regulated at a level sufficient to clear liquid gasoline from the vapor path in MPD applications. The actual amount of vapors withdrawn is controlled by the Healy nozzle, itself, in response to the liquid gasoline flow rate.**

### MOTOR SPECIFICATIONS

| | |
|---|---|
| Horsepower | 1/8 |
| Voltage | 120VAC |

### INTERFACE SPECIFICATIONS

| | |
|---|---|
| Input voltage | 120 VAC |
| Relay current capacity | 5A AC |
| Input signals | 120 VAC |
| Motor Input signal | 5 VDC @ 20 Hz 50% Duty Cycle |

## 14. TESTING THE SYSTEM:

- **Carefully review all work completed, being sure all mechanical joints are thoroughly tightened and electrical connections sealed.**
- **Open the product crash valves and restore power to the dispenser.**
- **With the power on, but no nozzles authorized, the VP1000 should not be running (unless the ambient temperature is below 40°F), but the power LED (yellow) should be energized on the interface module.**
- **Authorize one handle and the vacuum system should activate when the gasoline flow control valve is engaged. Repeat for all other nozzles, individually testing each nozzle on each side of dispenser. With each authorization, one of the green LED's on the interface module should illuminate and the VP1000 activate.**
- **Note: For unihose dispensers, conduct individual tests for each product grade on each side of the dispener to ensure that the same LED activates for all grades on the same side. If the other LED activates, wiring needs to be corrected.**
- **Authorize one nozzle and listen to the speed of the VP1000. With only one nozzle activated, the speed will be slower than if a nozzle on <u>each side</u> is activated. Activate a nozzle on the other side of the dispenser and listen for the speed to change.**
- **To test the tightness of the vapor plumbing installed on the suction side of the system requires a 0-100" water column gauge. Connect the gauge into the 1/4" test port of the reducing tee installed earlier in section 10 Photo R. Continue by following and completing the START-UP / NEW INSTALLATION/ WARRANTY/ ANNUAL TESTING FORM.**

## 15. TROUBLESHOOTING THE VP1000:

- **Use extreme care and caution when performing the tests listed below. If 120 VAC is accidentally applied to the fault or DC terminals, the module will be destroyed.**
- **With power applied to the dispenser, but no products authorized, there should be 120 VAC between neutral and 120 VAC on the module terminal strip.**
- **As above, with any product authorized, there should be single speed power applied to the VP1000. Verify this by checking for 2-3 VDC from OUTPUT 1 (RED WIRE) to FAULT COMMON (ORANGE WIRE), (or from OUTPUT 2 TO FAULT COMMON) also; one GREEN LED should be illuminated. With a second product authorized on the opposite side of the dispenser *i.e.* one product on each side, the motor should operate at higher speed and there should be 2-3 VDC on both output 1 and 2 (to fault common) and both GREEN LED's should be illuminated.**

- **With the pump running, a fault can be simulated by shorting, with a jumper wire, the "FAULT INPUT" (purple wire) to FAULT COMMON (orange). This should cause the motor to shut off, the solenoid valves to lose power and the dispenser to shut down. Also, as long as the short is maintained, the red LED will be illuminated. Removing the short will not automatically reset the module. To reset the module, remove the short, remove power to the dispenser for twenty seconds and restore power. The module should now be reset and the red led extinguished. This can also be accomplished by using the power reset (PWR RESET) on the module.**
- **If diagnosing a problem where the LED is already illuminated, a steady light indicates a low current condition, therefore expect a vane or rotor problem. If the LED is blinking, that indicates a high current condition and would expect to find a jammed rotor or vapor line flooded with product. . See Start-up/ New Installation/ Warranty/ Annual Testing Form.**
- **The electronics of the motor will make three attempts to have a successful start of the motor. If it detects a problem, on the fourth unsuccessful start, it will short the fault line to signal minus (DC-) and shut down the electronics.**

**MC100 Interface Module**

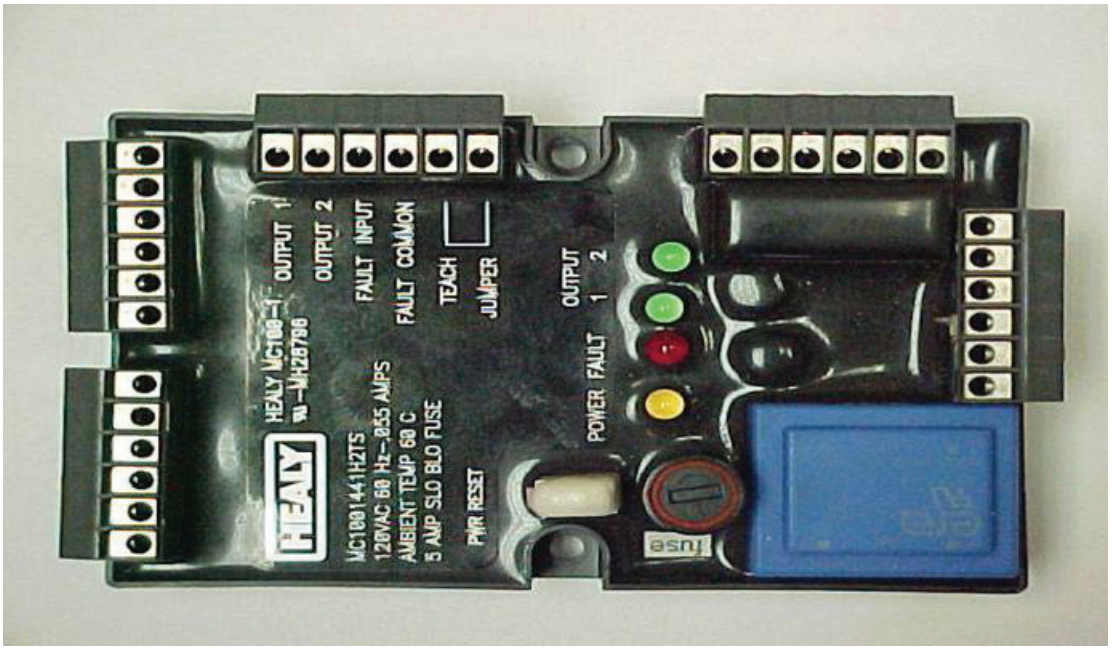

## 17. VP1000 Vane & Rotor Service & Replacement Guide

**Caution** **Disconnect power before beginning service.**

1. The work area **must** be clean and have sufficient lighting.
2. Disconnect the vapor piping connected to the **IN** and **OUT** ports of the VP1000 cover assembly.
3. Remove the four Allen head screws and lock washers that secure the pump cover assembly to the pump housing and remove the cover carefully.

**Caution** **Use a spill cloth when removing the cover, as there may be some gasoline inside the pump cavity**.

4. Carefully turn the rotor assembly by hand until the shaft key notch is at the 12 o'clock position. (See Figure 1)
5. Remove the rotor, vanes and shaft key from the pump housing.

**Note:** Place your hand or a container under the rotor while removing. Do not use any sharp objects that would scratch the surfaces of the pump cavity, pump shaft, rotor, or vanes.

6. Rotate the shaft by hand. If the shaft does not rotate freely, the entire vacuum pump needs replacement (p/n VP1000-5).
7. If the rotor and vanes are cracked, chipped, excessively worn or excessively dirty, the rotor and vanes should be replaced because cleaning will not remedy these conditions (p/n VP1000VRC or VP1000VRC-P).
8. If there is no visible damage, use a lint-free cloth with isopropyl alcohol to clean the rotor and vanes.
9. Using a lint-free cloth with isopropyl alcohol, thoroughly clean: the inside of the pump ring and rear of the pump cavity, the rotor shaft, and the inside of the pump cover.
10. Reposition the shaft (if necessary) so that the shaft key notch is in the 12 o'clock position. Install the cleaned original or new shaft key onto the shaft.
11. Carefully install the cleaned original or new rotor onto the shaft followed by the cleaned original or new vanes into the rotor.

**Note:** The rotor assembly should slide on to the shaft easily, without excessive force. (Rotors and vanes are reversible)

12. Lightly lubricate and install the new O-Ring for the pump housing.

**Note:** Do not allow any lubricant to get inside the pump housing.

13. Install the pump cover using the four Allen head screws and lock washers removed in step 3 and cross tighten.

**Note:** Use caution when sliding the pump cover over the O-Ring seal to prevent cutting or tearing.

14. Re-connect the vapor piping to the **IN** and **OUT** ports of the pump cover assembly that was removed in Step 2.
15. Re-apply power. Test for normal operation. (See VP1000 Vacuum Performance Test Procedure)

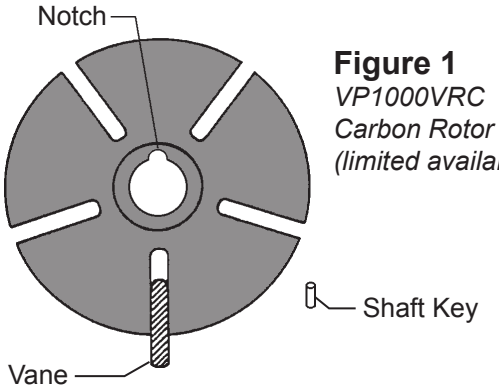


**Figure 1**
*VP1000VRC Carbon Rotor (limited availability)*

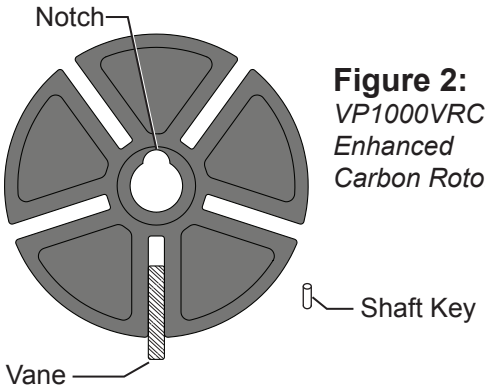


**Figure 2:**
*VP1000VRC-P Enhanced Carbon Rotor*

START-UP/NEW INSTALLATION/ WARRANTY/ ANNUAL TESTING FORM (Rev. 10/07)
HEALY VP1000 VACUUM PUMP

Date_____

**BOTH SIDES OF THIS TEST FORM MUST BE COMPLETED FOR NEW INSTALLATIONS**

- **Start-up / New installations – complete SIDE A and sections 3, 4, 5 and 6 of SIDE B. Submit forms to Healy Systems.**
- **Warranty Service or Annual Testing – complete contact information, dispenser make, vacuum pump serial # and the tests in sections 1 and 2 on SIDE A and conduct the appropriate tests specified on SIDE B. Submit Forms to Healy Systems.**

| | | |
|---|---|---|
| SERVICE COMPANY NAME | TELEPHONE | |
| SERVICE TECHNICIAN | HEALY TECH CERT # | |
| STATION ADDRESS | CITY | STATE |
| **DISPENSER MAKE** | **VACUUM PUMP SERIAL #** | |

# SIDE A

| **DISPENSER EQUIPMENT CHECKLIST - Parts A-1 and A-2** | | **YES** | **NO*** |
|---|---|---|---|
| **A-1** | Is all the installed dispenser hanging hardware listed in Exhibit 1 of Executive Order VR-201 or VR-202? | | |
| **A-2** | Proper installation of the VP1000 requires the test port and ball valve on the inlet side of the vacuum pump. Are the test port and ball valve installed correctly? | | |
| | ***If the answer to either A-1 or A-2 is NO, the Healy Warranty is Void.** | | |

## A-3

- THE FOLLOWING TEST WILL PERFORM A POSITIVE PRESSURE LEAK CHECK OF THE VACUUM PUMP, DISPENSER VAPOR PIPING, HANGING HARDWARE AND ALL NOZZLES ON BOTH SIDES OF THE DISPENSER.
- THE VP1000 OUTLET IS NOT CONNECTED TO UNDERGROUND PIPING DURING THIS TEST.

**CAUTION: REGULATE GASEOUS NITROGEN TO 2.5 PSI (~70" WC) MAXIMUM BEFORE TESTING**

1. Install a 0-100 inch water column (" wc) mechanical gauge at the VP1000 test port.
2. Use the water column gage positive (high) pressure port.
3. Gaseous nitrogen gas can now be connected to the outlet (exhaust) port of the VP1000.
4. Test pressure **cannot** exceed 70" wc.
5. **Slowly** introduce the gaseous nitrogen to a pressure between 60 – 70" wc.
6. After reaching the pressure range, close the valve supplying the gaseous nitrogen.
7. Record the initial pressure reading on the gauge - observe and record the final pressure reading after 60 seconds.
8. Leaks must be repaired when the pressure falls more than 4" wc in 60 seconds.
9. Retest until all leaks have been repaired.
10. Record test results in Section A-4.

| **A-4**<br>**PRESSURE TEST**<br>**2.5 PSI (~70"wc) Maximum** | **Initial Pressure test reading ("wc)** | **Pressure test reading after 60 seconds ("wc)** |
|---|---|---|

START-UP/NEW INSTALLATION/ WARRANTY/ ANNUAL TESTING FORM (Rev. 10/07)
HEALY VP1000 VACUUM PUMP

Date_____

**BOTH SIDES OF THIS TEST FORM MUST BE COMPLETED FOR NEW INSTALLATIONS**

- **Start-up / New installations – complete SIDE A and sections 3, 4, 5 and 6 of SIDE B. Submit forms to Healy Systems.**
- **Warranty Service or Annual Testing – complete contact information, dispenser make, vacuum pump serial # and the tests in sections 1 and 2 on SIDE A and conduct the appropriate tests specified on SIDE B. Submit Forms to Healy Systems.**

# SIDE B

| *Warranty Service*<br>Complete Troubleshooting Sections<br>**B-1 and B-2** | *Start-up/ New Installations/ Annual Testing*<br>Complete Sections<br>**B-3 through B-6** |
|---|---|

## B-1

**Control Module Fault Light**

**(Circle one) Flashing (LED) Steady (LED)**

1. All fault conditions require removal and cleaning or replacement of the rotor and vanes located inside the vacuum pumps round front cover assembly. Use the **VP1000 ROTOR & VANE SERVICE AND REPLACEMENT GUIDE** in the applicable dispenser retrofit manual of the ARB Approved Installation, Operation and Maintenance Manual for Executive Orders VR-201-K and VR-202-K.
2. Clean all surfaces including vanes, rotor, rotor housing and cover assembly.
3. Manually spin and inspect the motor shaft for bearing wear before re-installing the rotor kit.
4. Replace motor when bearings or shaft are damaged or worn.
5. Check O-ring seal before replacing rotor cover assembly.

## B-2

Re-Assemble / Reset Vacuum Pump and Module. (Power must be removed from both the vacuum pump and the **module for 20 seconds to reset the system**) using the power reset switch on the MC100 module.

## B-3

Dispenser Vapor Line Integrity Test

1. Install 0-100 inch water column (“ wc) vacuum mechanical gauge at the VP1000 test port.
2. Authorize the dispenser for fueling. The VP1000 will begin to run.
3. Close the ball valve at the pump inlet.
4. Record the initial vacuum reading on the gauge – observe and record the final vacuum reading after 60 seconds.
5. Open the ball valve at the pump inlet.
6. Leaks must be repaired when the vacuum reading falls more than 4” wc in 60 seconds.
7. Retest until all leaks have been repaired.
8. Record data in Section B-4.

**Note: If the initial vacuum reading is less than 60” wc, it could indicate a problem with the VP1000. Remove the dispenser from service. Use the troubleshooting section of the manual to investigate problem or contact the FFS Technical Help Desk at 800-984-6266 for assistance.**

## B-4

| VACUUM TEST Using VP1000 as vacuum source | Initial Vacuum test reading (“ wc) | Vacuum test reading after 60 sec. (“ wc) |
|---|---|---|
| | | |

## B-5

Dispenser Vaacuum Test

With one side of the dispenser authorized (VP1000 running) and the ball valve at the pump inlet open, dispense in handheld position a minimum of 0.5 gallons of fuel into a vehicle or test tank. Record the vacuum level while dispensing. Repeat test for the other side of the dispenser.

1. Side “A” Dispensing Vacuum _____” wc
2. Side “B” Dispensing Vacuum _____” wc

**Note: If the dispensing vacuum is less than 60” wc, remove the dispenser from service. See the troubleshooting section of the manual or contact FFS Technical Help Desk at 800-984-6266 for assistance.**

## B-6

Audible Increase Test

Test the VP1000 Vacuum Pump for normal operation. Use the 6 step procedure titled, “Testing the VP1000 Vacuum Pump for normal operation using the following test procedure:” in Section 1.1 (Weekly Inspection and Testing) of the Healy Systems Scheduled Maintenance document in the ARB Approved Installation, Operation and Maintenance Manual for the Healy Phase II EVR System not Including ISD. This is to verify that the pump recognizes when both sides of the dispenser are activated for fueling.

Does the VP1000 Vacuum Pump change speeds (audible increase) when both sides are activated for fueling?

Yes No

If the answer is no, **use the troubleshooting section of the manual to investigate problem or contact the FFS Technical Help Desk at 800-984-6266 for assistance.**

| Repairs - Comments | To Obtain Returned Materials Authorization number (RMA#) Call 800-984-6266<br>Forms can be faxed to Franklin Fueling Systems Customer Service at 800-225-9787 |
|---|---|

# WAYNE-DRESSER HARMONY™ SERIES DISPENSER RETROFIT for HEALY SYSTEMS, INC.

# MODEL VP1000

# VAPOR RECOVERY ASSIST SYSTEM

**(KIT Z078)**

# OUTLINE

**Notice: USE THIS PROCEDURE IF CONVERTING A BALANCE VAPOR RECOVERY SYSTEM TO A HEALY VAPOR RECOVERY ASSIST SYSTEM**

This Manual is to be used for new, replaced, retrofitted, or reconditioned dispensers/pumps.

**See Healy Systems Kit Z080 For Dispensers With Wayne-Vac™ Systems**


1. **Purpose**
2. **Safety**
3. **Models Covered**
4. **Parts Lists**
5. **Tools Required**
6. **Dispenser Access**
7. **Survey Scope of Work**
8. **Balance Removal**
9. **Installing The Healy VP1000 System**
10. **Connecting Vapor Lines**
11. **Installing The Sealed Nipple Assembly**
12. **Wiring Inside The Electronics Compartment**
13. **Connecting Healy Systems Dispensing Equipment**
14. **VP1000 Theory Of Operation**
15. **Testing The System**
16. **Trouble Shooting The VP1000**
17. **VP1000 Vane & Rotor Service & Replacement Guide**

**Start-up/ New Installation/ Warranty/ Annual Testing Form**



Franklin Fueling Systems
3760 Marsh Road
Madison, Wisconsin 53718 USA
ARB Approved Installation, Operation and Maintenance Manual

Website: http://www.franklinfueling.com
Email: sales@franklinfueling.com
Telephone: 800-225-9787
Fax: 608-838-6433


HEALY

Franklin Fueling Systems

## 1. PURPOSE:

**This procedure describes the tools, methods and skill levels required to install a Healy Systems, Inc. Model VP1000 Vapor Recovery pump in vapor ready Wayne Dresser Harmony™ series gasoline dispensers. Only Healy trained and certified contractors will be able to perform these retrofits or warranty will be void. The installer shall be a skilled petroleum technician and thoroughly familiar with the requirements of State, Federal and local codes for installation and repair of gasoline dispensing equipment. Also, they shall be aware of all the necessary safety precautions and site safety requirements to assure a safe and trouble free installation. NOTE: All electrical and hydraulic plumbing fittings referred to in these instructions must be UL "listed" or "recognized" for the purpose.**

**Note:** Installations of vapor piping into the inlet side of the vacuum pump should be sloped such that the natural flow direction is toward the vacuum pump. However, it is permissible to have a piping slope tilted away from the vacuum pump provided that all other applicable tests (Dispenser integrity and V/L) meet the specifications outlined in the appropriate section of the Executive Order and ***ARB Approved Installation, Operation and Maintenance Manual***.

**Note:** For installations with In-Station Diagnostics (ISD), the vapor flow meter shall be installed on the down stream side of the vacuum pump. Every effort shall be made to install the vapor flow meter so that vapor piping between the vacuum pump and the vapor flow meter is sloped such that the natural flow direction is toward the vapor flow meter. However, it is permissible to have the piping slope away from the vapor flow meter provided that all other applicable tests (Dispenser integrity, V/L and ISD Operability) meet the specifications outlined in the appropriate section of the Executive Order and ***ARB Approved Installation, Operation and Maintenance Manual***.

## 2. SAFETY: Before installing the equipment, read, understand and follow:

- **The National Electrical Code (NFPA 70)**
- **The Automotive and Marine Service Code (NFPA 30A)**
- **Any national, state and local codes that may apply.**

**The failure to install the equipment in accordance with NFPA 30A and 70 may adversely affect the safe use and operation of the system.**

**Accurate, sound installations reduce service calls: Use experienced, licensed contractors that practice accurate, safe installation techniques. Careful installation provides a sound troubleshooting framework for field repairs and can eliminate potential problems.**

1. **Read all instructions before beginning.**
2. **Follow all safety precautions:**
   - **Barricade the area.**
   - **Do not allow vehicles or unauthorized people in the area.**
   - **Do not smoke or allow open flames in the area.**
   - **Do not use power tools in the work area.**
   - **Wear eye protection during installation.**
3. **Use circuit breakers for multiple disconnects to turn off power and prevent feedback from other dispensers.**

**3. MODELS COVERED:**

**Wayne-Dresser Harmony series dispensers, all options except suffix "0", non vapor ready and WayneVAC™ systems. The addition of the Healy Systems VP1000 to the Harmony dispenser will increase the current draw of the dispenser by 2 amps. Use the label supplied to note this change.**

**4. PARTS LISTS: (See Photo A)**

**1 VP1000 Vacuum Pump**

**1 1365A Wire Harness / MC100 Series Interface Module Assembly**

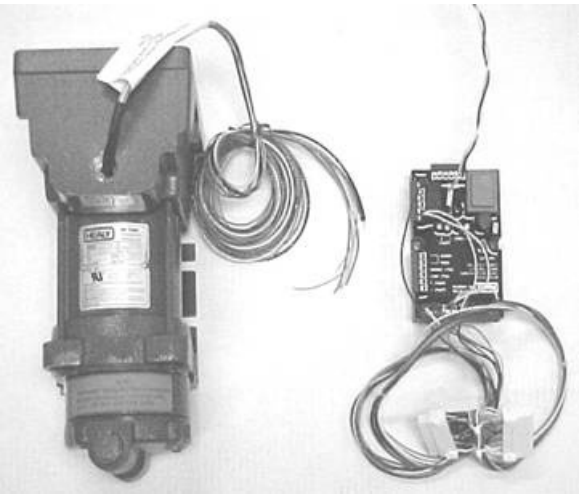

**PHOTO A**

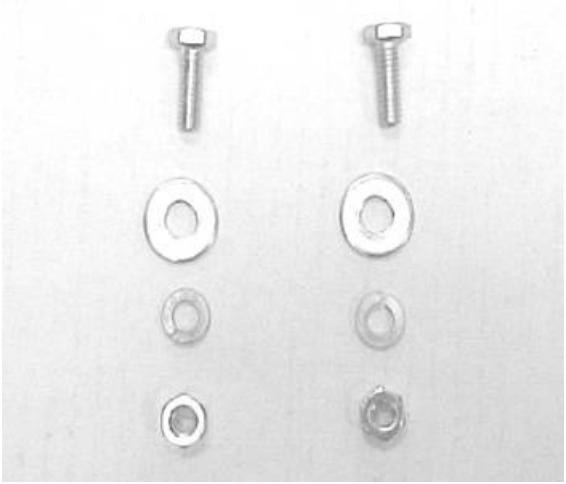

**PHOTO B**

**PHOTO C**

**PHOTO D**

**HARDWARE KIT Z078H: (See Photo B)**

| | |
|---|---|
| 2 | 1/4-20 bolts, washers, lock washers and nuts |

**ELECTRICAL KIT Z078E: (See Photo C)**

| | |
|---|---|
| 4 | 4” Tyraps |
| 1 | Current change label (p/n 1405) |
| 7 | Wire nuts |
| 1 | 8-32 x 5/8” machine screw, washer and nut |
| 1 | 1/2” male NPT x 3/4” female NPT electrical reducer fitting |
| 1 | #1346 potted conduit nipple |
| 1 | #8 Ring tong terminal |
| 1 | Notice label (p/n 1406) |
| 1 | UL Listed label (p/n 1410) |
| 30” | 3/4” (trade size) Non-metallic flexible, electrical conduit |
| 2 | 3/4” Elbow connectors for above |

**VAPOR KIT Z078V: (See Photo D)**

| | |
|---|---|
| 3 | 1/2” NPT X 5/8” flair straight fittings |
| 3 | 1/2” NPT X 5/8” flair elbow fittings |
| 12’ | 5/8” OD copper tube, type ‘L’ |
| 2 | 1” x 1/2 “ reducing bushing |
| 1 | 1/2” close nipple |
| 1 | 1/2” x 1/4” x 1/2” reducing tee |
| 1 | 1/2” ball valve |
| 1 | 1/4” pipe plug |
| 6 | 5/8” flare nuts |

**MATERIALS SUPPLIED BY INSTALLER:**

**Thread Sealing Compound – non-Setting, UL Classified for use on all tapered thread, Non-electrical, plumbing fittings.**

**Teflon tape**

**5. TOOLS REQUIRED:**

- **1/2” or 3/8” ratchet set w/ sockets 1/4” through 9/16” + 3” extension**
- **9” lineman’s pliers**
- **Assorted open end wrenches 1/4” through 3/4”**
- **Wire cutters/strippers 18 AWG and 26 AWG**
- **1-1/8” greenlee type sheet metal punch**
- **Mechanical hand drill (egg-beater type)**
- **Assorted drill bits 1/16” through 7/16”**
- **Assorted screwdrivers (flat blade-one must be 1/8” wide and Phillips)**
- **5/8” copper tube bending tool**
- **5/8” copper tube flaring tool**
- **Copper tubing cutter**
- **Electrical multi-meter**
- **Small hand brush (1-1/2” thick, for clearing chips)**
- **12” adjustable wrench**
- **10” pipe wrench**
- **Tape measure**
- **Allen wrenches**
- **#20 torx bit**
- **Whitney type hand sheet metal punch with 3/16” punch and die set**

**6. DISPENSER ACCESS:**

- **Secure Dispenser Access keys from Station Management.**
- **Lock-out and tag-out all electrical power to dispenser being modified.**
- **Remove both Upper Column Covers above the nozzle holsters.**
- **Remove the Lower Column Cover below the nozzle holster on the “A” side of the dispenser. This is the side that the 1” vapor tube runs vertical from the 1” tee connected to the upper vapor manifold to the elbow attached to the vapor tee mounted at the base of the dispenser see photo F.**
- **Remove the Upper Cladding covering the “J” Box see photo E.**
- **Remove the “J” Box cover.**
- **Remove the Door Cladding assembly and the Access Door assembly in order to expose the electronics compartment.**

**7. Survey – Scope of Work:** ***Perform this step before beginning steps 8 thru 12.***

**Read and familiarize yourself with the theory of operations sheet and wiring instructions for the VP1000 Vapor Pump. The installation of the pump is on the sheet metal shelf over the junction box, with the pump cover facing the "A" side of the dispenser, see photo E. This is the side that the 1" vapor tube runs vertical from the 1" elbow connected to the upper vapor manifold to the vapor tee mounted at the base of the dispenser, see photo F. From this survey, you will have an indication of where the vapor plumbing fittings need to go and where the holes need to be drilled in the adjoining sheet metal to allow the vapor pipes from the pump to pass through to the hydraulics compartment. Notice also in the electrical junction box, the plug washers on the left side of the box that you will remove to run the pump wires down to the Healy potted conduit nipple. The Healy potted conduit nipple is installed in another sealed opening in the bottom of the J-box. See Section 11.**
***<u>CAUTION:</u> ALL POWER TO DISPENSER UNDER MODIFICATION SHOULD BE COMPLETELY DISCONNECTED AND CAPPED OFF AT JUNCTION BOX TO AVOID UNINTENTIONAL FEEDBACK FROM OTHER DISPENSERS!!***

***Photo E***

***Photo F***

**8. BALANCE REMOVAL:**

**NOTICE: BEFORE REMOVING THE 1" VAPOR DOWN PIPE, BE SURE TO CLOSE THE IMPACT VALVES ON BOTH THE PRODUCT AND VAPOR RETURN LINE (IF CONNECTED). DISCONNECTING THE PRODUCT LINE IN FRONT OF THE VAPOR DOWN PIPE WILL EASE REMOVAL OF THE PIPE – BE SURE TO USE PETROLEUM 'DIAPERS' TO CATCH ANY FUEL THAT MAY BE SPILLED AS THE CONNECTIONS ARE BROKEN.**

- **Disconnect the two unions on the product pipe on both sides of the spin-on filter, see photo F. This will ease the removal of the vapor pipe.**
- **With the product filter removed, disconnect the vapor pipe from the 1" elbow that's attached to the vapor tee. Unbolt the tee from the bottom of the dispenser frame in order to remove the vapor pipe from the elbow.**
- **Swivel the pipe out from the cabinet far enough to allow turning it out of the tee at the top of the dispenser and discard the pipe.**
- **Bolt the tee back in the bottom frame and install a 1" x 1/2" NPT reducing bushing and a 1/2" NPT x 5/8" flare straight fitting.**
- **Reconnect the product plumbing.**

## WARNING

**This retrofit kit requires drilling in a Hazardous Location. Insure that all power to the dispenser has been turned off. Open all access doors for increased airflow. Use only sharp drill bits; dull bits may generate excessive heat. Use air powered drill at low RPM's. If an electric drill is used, a suitable UL Listed Gas Detector must be used to ensure the area is below 25% of the Lower Explosive Limit. Do not drill if gasoline odors are present.**

**If drilling in the electronics cabinet, carefully collect and remove all metal shavings that may be inside the cabinet. Failure to remove the shavings could result in an electrical shock hazard. Before drilling, check to ensure that no wires or fluid containing parts (i.e. product tubing) is located on the backside or near the chuck of the drill.**

**9. INSTALLING THE HEALY VP1000 SYSTEM:**

**NOTICE: WHEN DRILLING HOLES, ASSURE THAT THERE ARE NO HAZARDOUS VAPORS PRESENT AND DO NOT ALLOW CHIPS TO FALL DOWN INTO THE HYDRAULICS AREA.**

- **In order to get the vapor tubing from the pump into the vapor plumbing area, it is necessary to drill or punch two 1-1/8" holes on the sheet metal column near the edge of the shelf, see photo E. Use a tape measure and mark the centerline of the holes to be 1-1/4" in from the front edge of the sheet metal column. Measure down from the top of the column 5-1/2" and mark on the 1-1/4" centerline, measure down an <u>additional</u> 6-3/4" and mark on the centerline. These marks are the centers of the holes for the vapor pipes going to the VP1000. DO NOT DRILL – verify positions in the next steps.**
- **Get the vapor pump and install a 1/2" NPT x 5/8" flare elbow fitting into the 'IN' and 'OUT' ports using tape, not pipe dope. Looking at the face of the pump, completely tighten both fittings so they are facing the right.**

- **Position the pump on top of the sheet metal shelf over the electrical junction box on top of the electronics cabinet, with the fittings pointing toward the hydraulics cabinet and overhanging the edge of the shelf about 1/4”.**
- **Slide the pump to fit against the hydraulics cabinet and position so as to allow for matching the location of holes that need to be drilled through the sheet metal.**
- **Satisfied that the fittings and hole marks line up, remove the pump and drill the two, 1-1/8” holes, marked above.**
- **Position the pump assembly on top of the sheet metal shelf and slide over so that the ports are accessible from the hydraulics area.**

## 10. CONNECTING VAPOR LINES: (See Photos F, G & H)

- **Make connections below using pipe thread compound as required.**
- **Install a 1” x 1/2” NPT reducing bushing in the top vapor line manifold tee where the 1” down pipe was removed see photo G.**
- **Install a 1/2” NPT x 5/8” flair straight fitting into the above.**

**Photo G**

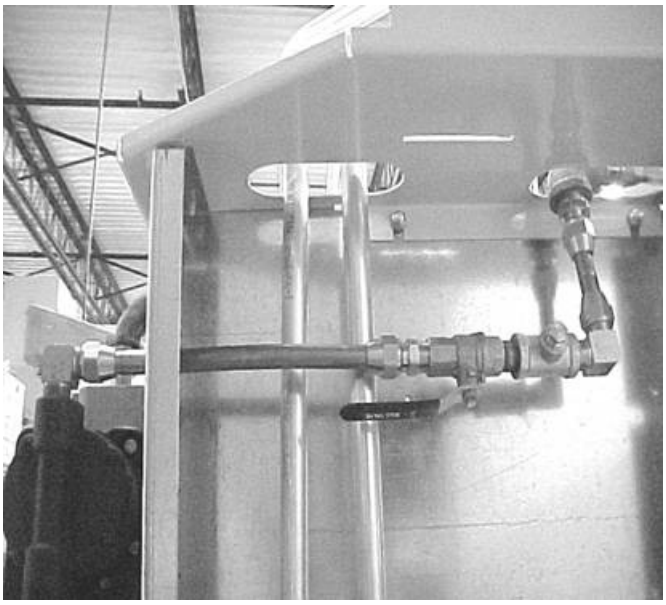

**Photo H**

- **Make up the following assembly, see photo G. Note: The ball valve handle closes toward you. Install a 1/2” NPT x 5/8” flare straight fitting to the left side of the ball valve, install the 1/2” close nipple to the right side then the 1/2” reducing tee and the 1/2” NPT x 5/8” flare elbow – completely tighten the tee with the 1/4” branch facing up and the elbow also facing up, install the 1/4” pipe plug into the branch.**
- **Make up a piece of 5/8” OD copper tube that will go from the flare elbow on the inlet of the VAC pump, through the upper 1-1/8” hole in the column to the straight flare fitting on the ball valve assembly so that when installed and secured, positions the flare elbow on the ball valve assembly in a straight line with the straight flare fitting that’s attached to the 1” tee of the upper vapor manifold. Install and tighten with the ball valve assembly in position as shown in photo G.**
- **Make up a piece of 5/8” tube to connect the flare elbow on the ball valve assembly to the straight flare fitting that’s attached to the 1” tee of the upper vapor manifold. This piece should be made so that when installed the ball valve assembly and tubing should be horizontal or slightly pitched toward the pump to avoid liquid traps. Install and tighten.**

- **Mark the location of the mounting bolt holes from the VAC pump base on the shelf, unscrew the flare nut on the inlet and move the VAC pump out of the way. Drill two 5/16" holes (one on each side of the bracket) required for mounting the pump.**
- **Reposition the VAC pump and reconnect the flare nut to the inlet port, then install the two 1/4-20 bolts, washers, lock washers and nuts to secure the pump.**
- **Measure and cut appropriate length of 5/8" tubing to reach from the 5/8" flare elbow on the outlet of the VAC pump, through the lower 1-1/8" hole in the column to the 5/8" flare straight fitting installed in the 1" elbow at the base of the dispenser, using a 90 degree bend, see photo H.**
- **Install and tighten making sure the horizontal portion of the tube attached to the outlet is either horizontal or slightly pitched downward away from the pump to avoid liquid traps.**

**11. INSTALLING THE SEALED NIPPLE ASSEMBLY: (See Photos I & J)**

**NOTICE: THE INTERFACE MODULE THAT IS SUPPLIED HAS A HARNESS ATTACHED AND A WIRING PLUG FOR THE AC CONNECTIONS. ALSO SUPPLIED IS THE SEALED NIPPLE ASSEMBLY (1346) THAT MUST BE USED BETWEEN THE DIVISION 1 AREA (THE ELECTRONICS COMPARTMENT) AND THE DIVISION 2 AREA (THE SPACE ABOVE AND OUTSIDE THE ELECTRONICS COMPARTMENT).**

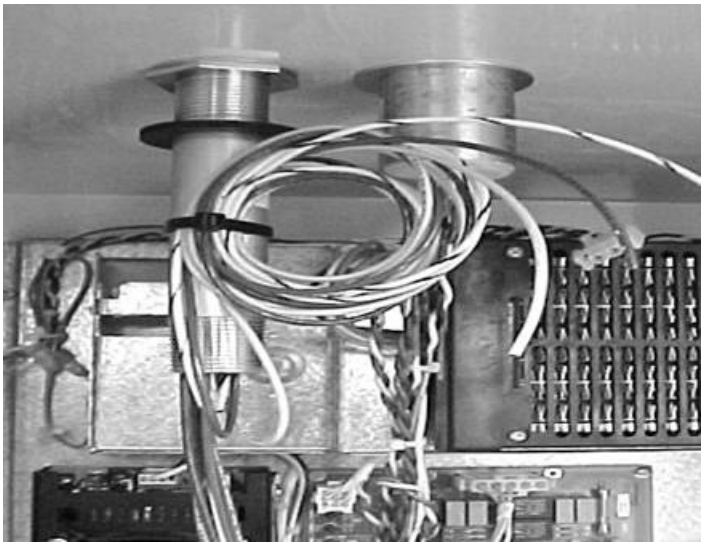

**Photo I**

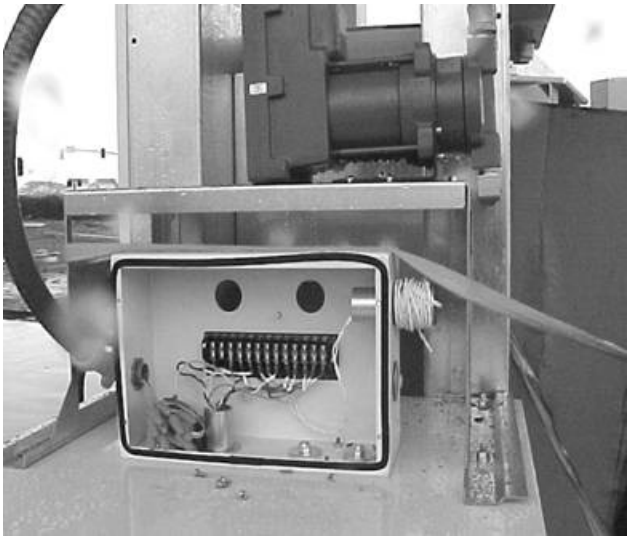

**Photo J**

- **Remove the bolts and washers that seal the access hole on the bottom left side of the "J" box.**
- **Get the 1346 sealed nipple assembly and carefully remove the first nut and washer over the wires. Thread these wires from inside the electronics compartment, up through the bottom hole uncovered above. Carefully replace the washer and nut over the wires and secure the unit into the box.**

- **At the VP1000, get and install the 1/2” male x 3/4” female adaptor over the wires coming from the motor. Do not use pipe dope on these fittings and be sure there is at least five full threads of engagement of the fittings in their respective couplings.**
- **Remove the nut from one of the 3/4” elbow connectors, thread the pump wires through the elbow and screw the threaded end with the “O” ring into the 1/2” male X 3/4” female adaptor.**
- **Thread the wires through the 30” piece of non-metallic electrical tubing and then twist the tubing onto the elbow on the motor until the rubber washer is compressed.**
- **Get the other elbow connector, remove only the nut (leave the o-ring in place) then thread the motor wires through the elbow and screw the fitting into the 3/4” tubing. Use care not to twist the wires.**
- **Thread the wires into the electrical junction box, pull up tightly and secure the fitting to the box using the nut removed above.**
- **In the “J” box, leave about 6” of wire on both the wires coming from the motor and from the sealed nipple, cut off excess wire and strip approximately 1/2” of insulation from all wires.**
- **Use wire nuts to join the wires, color for color, together. There may be some extra wires in some sealed nipples, cap these off and dress aside.**
- **Keep wires clear of pinch points and from interference, make sure no wires overhang the door openings.**
- **Replace the cover on the junction box.**

## 12. WIRING INSIDE THE ELECTRONICS COMPARTMENT: (SEE PHOTOS K, L, M & N)

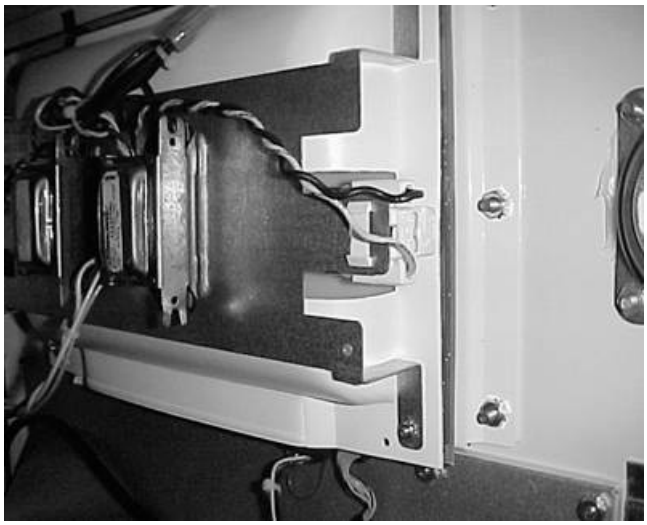

**PHOTO K**

**PHOTO L**

- **In the electronics bay, locate the light assembly on the upper right side of the cabinet, see photo K. In photo L, notice the 3/16" hole that must be made to accept the module mounting screw. Punch this hole approximately as shown. If drilling, be sure no hazardous vapors are present and use a coffee cup or other suitable container to prevent metal chips from falling inside the cabinet.**

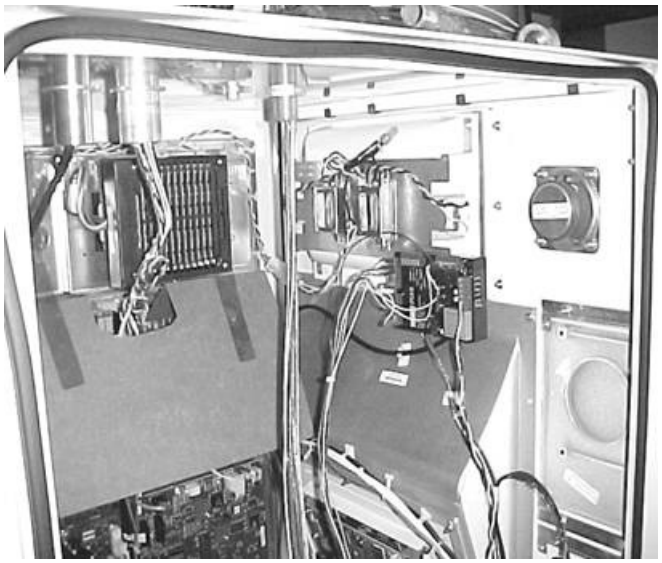

**Photo M**

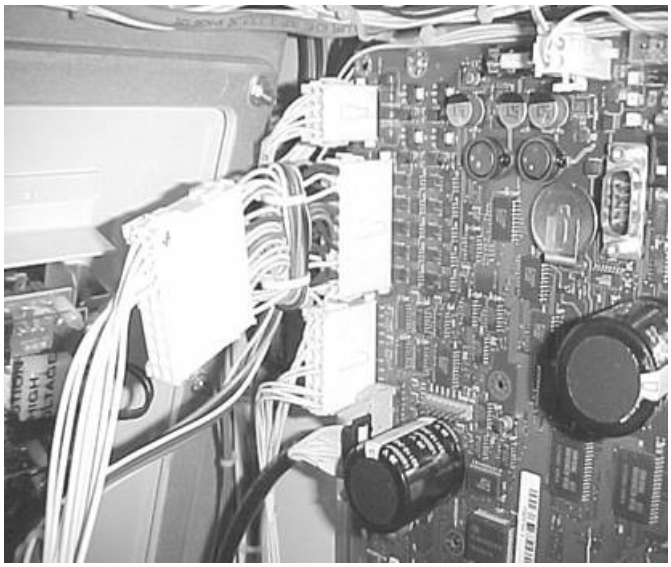

**Photo N**

- **Leave the wires coming from the sealed nipple assembly at least six inches longer than necessary to reach the bottom of the compartment. Cut off excess and strip all wires 1/2".**

- **Connect the wires from the sealed nipple to the interface module as follows:**
  - **Black wire to ‘motor ‘ on module**
  - **White wire to ‘neutral’ on module**
  - **Red wire (either) to ‘output 1’ on module**
  - **Red wire (other) to ‘output 2’ on module**
  - **Orange wire to ‘fault common’ on module**
  - **Purple wire to ‘fault input’ on module**
  - **Green wire needs a #8 ring tong lug installed and connected to any chassis ground (frame)**
  - **Some sealed nipples may have some extra wires, cap these and bundle them neatly out of the way.**
- **The black and white twisted pair of wires with a connector should be connected to an available AC outlet on the dispenser Relay Board #887225.**
- **The male/female multiconductor cable that is wired to the interface module is routed up to the computer board # 173976 (See Photo N). Disconnect the valves cable that’s in the J3 connector and install in the female side of the double connector on the harness. The entire assembly is then installed back into J3 on the Computer board. WIRING IS COMPLETE.**
- **Mount the interface module as shown in Photo M using the 8-32 x 5/8” screw, washer and nut supplied in the electrical kit.**
- **Install the following labels supplied:**
  - **NOTICE label for current increase (1405), install on the frame rail near the existing power consumption label.**
  - **Large NOTICE label (1406) relating to the vapor recovery upgrade and how to reset the electronic module should be installed near the module, where it will be readily visible to a service technician on the junction box cover.**
  - **UL, retrofit kit identification number (1410), install on the electronic module.**

## 13. CONNECTING HEALY SYSTEMS DISPENSING EQUIPMENT

- **Completing the connection of Healy Systems dispensing equipment requires the installation of Healy Systems Phase II dispenser adaptors, hoses and nozzles (Hanging Hardware).**
- **If applicable, remove existing non-Healy hanging hardware (from the dispenser product outlet adaptor to and including the nozzles).**
- **Vapor ready dispensers will require a Healy Systems adaptor to make the hose threads compatible with other Healy Systems equipment. Install following instructions packed with the adaptor. Various adaptors and pigtails are available, depending on how the dispenser is configured: M34 metric (Healy designation F3 or S3) or balance ready (Healy designation S4).**
- **Healy Vapor Recovery Hoses are available in various lengths to satisfy local ordinances and still provide "far side" fueling capability. Install these following instructions contained on the shipping box.**
- **Breakaways are required: Install either Model 8701-VV breakaway or Model 807 swivel breakaway; install using the instructions supplied with the unit.**
- **The Healy Systems nozzle Model 900 (EVR) is the only nozzle necessary to complete the upgrade. Check to be sure the nozzle hanger is mounted in the highest position. Be sure to check for proper fit in the nozzle holster and that the nozzle can be locked in the off position. Also, be sure that when the nozzle is locked, that the dispenser can not be activated from the locked position.**

## 14. VP1000 Theory of Operation

**The Healy Systems VP1000 is a self-contained rotary vane pump, designed for gasoline vapor recovery utilizing various parts of the Healy System Vapor Recovery product line. It is intended for use by either OEM dispenser/pump manufacturers or as an after market add-on to make existing equipment compatible with Healy System technology. In order to convert to 'others' equipment, an electronic interface is required to adapt the targeted pump/dispenser to the new vapor recovery equipment. The interface senses when authorization to dispense has been given and sends signals to the motor to operate at a low speed for one hose, or a higher speed for two hoses. It also functions to shut off the pump/dispenser if it senses that the vapor pump is not operating properly. The vacuum is regulated at a level sufficient to clear liquid gasoline from the vapor path in MPD applications. The actual amount of vapors withdrawn is controlled by the Healy nozzle, itself, in response to the liquid gasoline flow rate.**

## MOTOR SPECIFICATIONS

| | |
|---|---|
| Horsepower | 1/8 |
| Voltage | 120VAC |

## INTERFACE SPECIFICATIONS

| | |
|---|---|
| Input voltage | 120 VAC |
| Relay current capacity | 5A AC |
| Input signals | 120 VAC |
| Motor Input signal | 5 VDC @ 20 Hz 50% Duty Cycle |

**15. TESTING THE SYSTEM:**

- **Carefully review all work completed, being sure all mechanical joints are thoroughly tightened and electrical connections sealed.**
- **Open the product crash valves and restore power to the dispenser.**
- **With the power on, but no nozzles authorized, the VP1000 should not be running (unless the ambient temperature is below 40°F), but the power LED (yellow) should be energized on the interface module.**
- **Authorize one handle and the vacuum system should activate when the gasoline flow control valve is engaged. Repeat for all other nozzles, individually testing each nozzle on each side of dispenser. With each authorization, one of the green LED's on the interface module should illuminate and the VP1000 activate.**
- **Note: For unihose dispensers, conduct individual tests for each product grade on each side of the dispener to ensure that the same LED activates for all grades on the same side. If the other LED activates, wiring needs to be corrected.**
- **Authorize one nozzle and listen to the speed of the VP1000. With only one nozzle activated, the speed will be slower than if a nozzle on <u>each side</u> is activated. Activate a nozzle on the other side of the dispenser and listen for the speed to change.**
- **To test the tightness of the vapor plumbing installed on the suction side of the system requires a 0-100" water column gauge. Connect the gauge into the 1/4" test port of the reducing tee installed earlier in section 10 Photo G. Continue by following and completing the START-UP / NEW INSTALLATION / WARRANTY / ANNUAL TESTING FORM.**

## 16. TROUBLESHOOTING THE VP1000:

- **Use extreme care and caution when performing the tests listed below. If 120 VAC is accidentally applied to the fault or DC terminals, the module will be destroyed.**
- **With power applied to the dispenser, but no products authorized, there should be 120 VAC between neutral and 120 VAC on the module terminal strip.**
- **As above, with any product authorized, there should be single speed power applied to the VP1000. Verify this by checking for 2-3 VDC from OUTPUT 1 (RED WIRE) to FAULT COMMON (ORANGE WIRE), (or from OUTPUT 2 TO FAULT COMMON) also; one GREEN LED should be illuminated. With a second product authorized on the opposite side of the dispenser *i.e.* one product on each side, the motor should operate at higher speed and there should be 2-3 VDC on both output 1 and 2 (to fault common) and both GREEN LED's should be illuminated.**
- **With the pump running, a fault can be simulated by shorting, with a jumper wire, the "FAULT INPUT" (purple wire) to FAULT COMMON (orange). This should cause the motor to shut off, the solenoid valves to lose power and the dispenser to shut down. Also, as long as the short is maintained, the red LED will be illuminated. Removing the short will not automatically reset the module. To reset the module, remove the short, remove power to the dispenser for twenty seconds and restore power. The module should now be reset and the red led extinguished. This can also be accomplished by using the power reset (PWR RESET) on the module.**
- **If diagnosing a problem where the LED is already illuminated, a steady light indicates a low current condition, therefore expect a vane or rotor problem. If the LED is blinking, that indicates a high current condition and would expect to find a jammed rotor or vapor line flooded with product. See Start-up / New Installation / Warranty / Annual Testing Form.**
- **The electronics of the motor will make three attempts to have a successful start of the motor. If it detects a problem, on the fourth unsuccessful start, it will short the fault line to signal minus (DC-) and shut down the electronics.**

**MC 100 Interface Module**

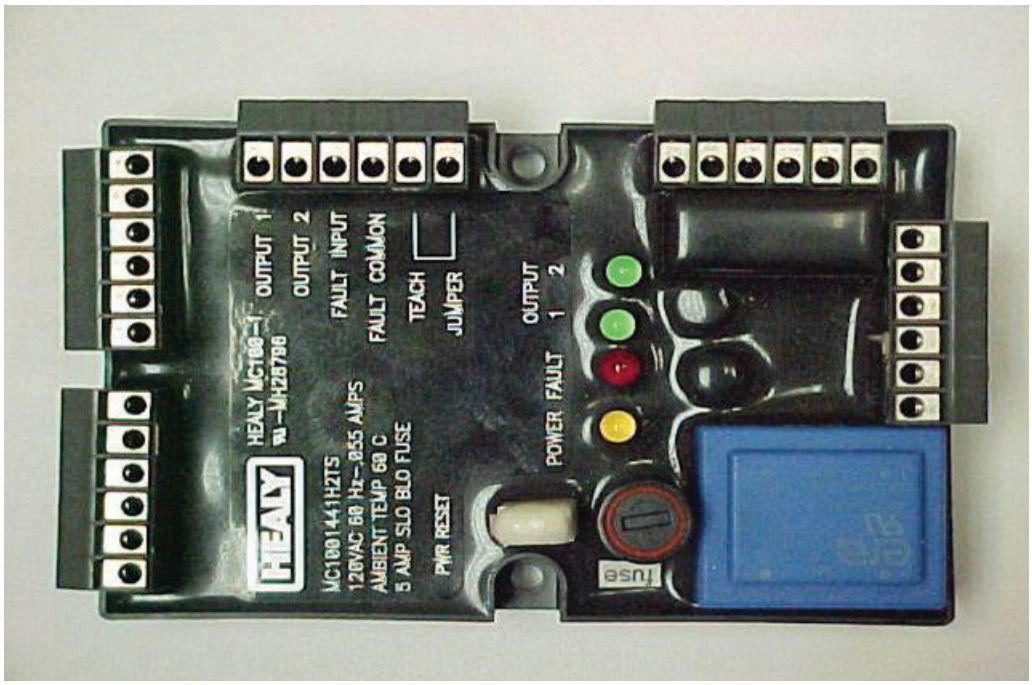

## 17. VP1000 Vane & Rotor Service & Replacement Guide

**Caution** **Disconnect power before beginning service.**

1. The work area **must** be clean and have sufficient lighting.
2. Disconnect the vapor piping connected to the **IN** and **OUT** ports of the VP1000 cover assembly.
3. Remove the four Allen head screws and lock washers that secure the pump cover assembly to the pump housing and remove the cover carefully.

**Caution** **Use a spill cloth when removing the cover, as there may be some gasoline inside the pump cavity**.

4. Carefully turn the rotor assembly by hand until the shaft key notch is at the 12 o'clock position. (See Figure 1)
5. Remove the rotor, vanes and shaft key from the pump housing.

**Note:** Place your hand or a container under the rotor while removing. Do not use any sharp objects that would scratch the surfaces of the pump cavity, pump shaft, rotor, or vanes.

6. Rotate the shaft by hand. If the shaft does not rotate freely, the entire vacuum pump needs replacement (p/n VP1000-5).
7. If the rotor and vanes are cracked, chipped, excessively worn or excessively dirty, the rotor and vanes should be replaced because cleaning will not remedy these conditions (p/n VP1000VRC or VP1000VRC-P).
8. If there is no visible damage, use a lint-free cloth with isopropyl alcohol to clean the rotor and vanes.
9. Using a lint-free cloth with isopropyl alcohol, thoroughly clean: the inside of the pump ring and rear of the pump cavity, the rotor shaft, and the inside of the pump cover.
10. Reposition the shaft (if necessary) so that the shaft key notch is in the 12 o'clock position. Install the cleaned original or new shaft key onto the shaft.
11. Carefully install the cleaned original or new rotor onto the shaft followed by the cleaned original or new vanes into the rotor.

**Note:** The rotor assembly should slide on to the shaft easily, without excessive force. (Rotors and vanes are reversible)

12. Lightly lubricate and install the new O-Ring for the pump housing.

**Note:** Do not allow any lubricant to get inside the pump housing.

13. Install the pump cover using the four Allen head screws and lock washers removed in step 3 and cross tighten.

**Note:** Use caution when sliding the pump cover over the O-Ring seal to prevent cutting or tearing.

14. Re-connect the vapor piping to the **IN** and **OUT** ports of the pump cover assembly that was removed in Step 2.
15. Re-apply power. Test for normal operation. (See VP1000 Vacuum Performance Test Procedure)

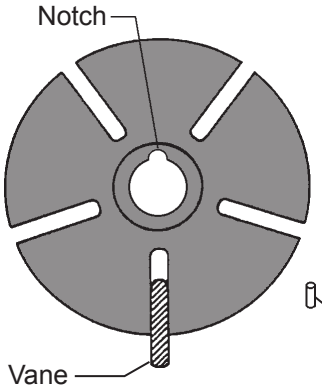


**Figure 1**
*VP1000VRC Carbon Rotor (limited availability)*

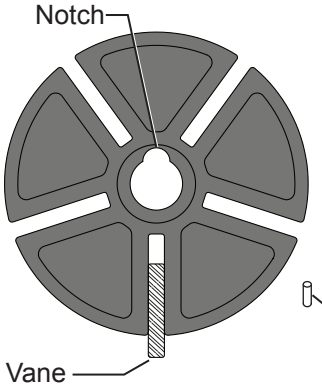


**Figure 2:**
*VP1000VRC-P Enhanced Carbon Rotor*

START-UP/NEW INSTALLATION/ WARRANTY/ ANNUAL TESTING FORM (Rev. 10/07)
HEALY VP1000 VACUUM PUMP

Date_____

**BOTH SIDES OF THIS TEST FORM MUST BE COMPLETED FOR NEW INSTALLATIONS**

- **Start-up / New installations – complete SIDE A and sections 3, 4, 5 and 6 of SIDE B. Submit forms to Healy Systems.**
- **Warranty Service or Annual Testing – complete contact information, dispenser make, vacuum pump serial # and the tests in sections 1 and 2 on SIDE A and conduct the appropriate tests specified on SIDE B. Submit Forms to Healy Systems.**

| | | |
|---|---|---|
| SERVICE COMPANY NAME | TELEPHONE | |
| SERVICE TECHNICIAN | HEALY TECH CERT # | |
| STATION ADDRESS | CITY | STATE |
| **DISPENSER MAKE** | **VACUUM PUMP SERIAL #** | |

# SIDE A

| **DISPENSER EQUIPMENT CHECKLIST - Parts A-1 and A-2** | | **YES** | **NO*** |
|---|---|---|---|
| **A-1** | Is all the installed dispenser hanging hardware listed in Exhibit 1 of Executive Order VR-201 or VR-202? | | |
| **A-2** | Proper installation of the VP1000 requires the test port and ball valve on the inlet side of the vacuum pump. Are the test port and ball valve installed correctly? | | |
| | ***If the answer to either A-1 or A-2 is NO, the Healy Warranty is Void.** | | |

## A-3

- THE FOLLOWING TEST WILL PERFORM A POSITIVE PRESSURE LEAK CHECK OF THE VACUUM PUMP, DISPENSER VAPOR PIPING, HANGING HARDWARE AND ALL NOZZLES ON BOTH SIDES OF THE DISPENSER.
- THE VP1000 OUTLET IS NOT CONNECTED TO UNDERGROUND PIPING DURING THIS TEST.

**CAUTION: REGULATE GASEOUS NITROGEN TO 2.5 PSI (~70" WC) MAXIMUM BEFORE TESTING**

1. Install a 0-100 inch water column (" wc) mechanical gauge at the VP1000 test port.
2. Use the water column gage positive (high) pressure port.
3. Gaseous nitrogen gas can now be connected to the outlet (exhaust) port of the VP1000.
4. Test pressure **cannot** exceed 70" wc.
5. **Slowly** introduce the gaseous nitrogen to a pressure between 60 – 70" wc.
6. After reaching the pressure range, close the valve supplying the gaseous nitrogen.
7. Record the initial pressure reading on the gauge - observe and record the final pressure reading after 60 seconds.
8. Leaks must be repaired when the pressure falls more than 4" wc in 60 seconds.
9. Retest until all leaks have been repaired.
10. Record test results in Section A-4.

| **A-4**<br>**PRESSURE TEST**<br>**2.5 PSI (~70"wc) Maximum** | **Initial Pressure test reading ("wc)** | **Pressure test reading after 60 seconds ("wc)** |
|---|---|---|

START-UP/NEW INSTALLATION/ WARRANTY/ ANNUAL TESTING FORM (Rev. 10/07)
HEALY VP1000 VACUUM PUMP

Date_____

**BOTH SIDES OF THIS TEST FORM MUST BE COMPLETED FOR NEW INSTALLATIONS**

- **Start-up / New installations – complete SIDE A and sections 3, 4, 5 and 6 of SIDE B. Submit forms to Healy Systems.**
- **Warranty Service or Annual Testing – complete contact information, dispenser make, vacuum pump serial # and the tests in sections 1 and 2 on SIDE A and conduct the appropriate tests specified on SIDE B. Submit Forms to Healy Systems.**

# SIDE B

| *Warranty Service*<br>Complete Troubleshooting Sections<br>**B-1 and B-2** | *Start-up/ New Installations/ Annual Testing*<br>Complete Sections<br>**B-3 through B-6** |
|---|---|

## B-1

**Control Module Fault Light**

**(Circle one) Flashing (LED) Steady (LED)**

1. All fault conditions require removal and cleaning or replacement of the rotor and vanes located inside the vacuum pumps round front cover assembly. Use the **VP1000 ROTOR & VANE SERVICE AND REPLACEMENT GUIDE** in the applicable dispenser retrofit manual of the ARB Approved Installation, Operation and Maintenance Manual for Executive Orders VR-201-K and VR-202-K.
2. Clean all surfaces including vanes, rotor, rotor housing and cover assembly.
3. Manually spin and inspect the motor shaft for bearing wear before re-installing the rotor kit.
4. Replace motor when bearings or shaft are damaged or worn.
5. Check O-ring seal before replacing rotor cover assembly.

## B-2

Re-Assemble / Reset Vacuum Pump and Module. (Power must be removed from both the vacuum pump and the **module for 20 seconds to reset the system**) using the power reset switch on the MC100 module.

## B-3

Dispenser Vapor Line Integrity Test

1. Install 0-100 inch water column (“ wc) vacuum mechanical gauge at the VP1000 test port.
2. Authorize the dispenser for fueling. The VP1000 will begin to run.
3. Close the ball valve at the pump inlet.
4. Record the initial vacuum reading on the gauge – observe and record the final vacuum reading after 60 seconds.
5. Open the ball valve at the pump inlet.
6. Leaks must be repaired when the vacuum reading falls more than 4” wc in 60 seconds.
7. Retest until all leaks have been repaired.
8. Record data in Section B-4.

**Note: If the initial vacuum reading is less than 60” wc, it could indicate a problem with the VP1000. Remove the dispenser from service. Use the troubleshooting section of the manual to investigate problem or contact the FFS Technical Help Desk at 800-984-6266 for assistance.**

## B-4

| VACUUM TEST Using VP1000 as vacuum source | Initial Vacuum test reading (“ wc) | Vacuum test reading after 60 sec. (“ wc) |
|---|---|---|

## B-5

Dispenser Vaacuum Test

With one side of the dispenser authorized (VP1000 running) and the ball valve at the pump inlet open, dispense in handheld position a minimum of 0.5 gallons of fuel into a vehicle or test tank. Record the vacuum level while dispensing. Repeat test for the other side of the dispenser.

1. Side “A” Dispensing Vacuum _____” wc
2. Side “B” Dispensing Vacuum _____” wc

**Note: If the dispensing vacuum is less than 60” wc, remove the dispenser from service. See the troubleshooting section of the manual or contact FFS Technical Help Desk at 800-984-6266 for assistance.**

## B-6

Audible Increase Test

Test the VP1000 Vacuum Pump for normal operation. Use the 6 step procedure titled, “Testing the VP1000 Vacuum Pump for normal operation using the following test procedure:” in Section 1.1 (Weekly Inspection and Testing) of the Healy Systems Scheduled Maintenance document in the ARB Approved Installation, Operation and Maintenance Manual for the Healy Phase II EVR System not Including ISD. This is to verify that the pump recognizes when both sides of the dispenser are activated for fueling.

Does the VP1000 Vacuum Pump change speeds (audible increase) when both sides are activated for fueling?

Yes No

If the answer is no, **use the troubleshooting section of the manual to investigate problem or contact the FFS Technical Help Desk at 800-984-6266 for assistance.**

| Repairs - Comments | To Obtain Returned Materials Authorization number (RMA#) Call 800-984-6266<br>Forms can be faxed to Franklin Fueling Systems Customer Service at 800-225-9787 |
|---|---|

# WAYNE-DRESSER HARMONY™ SERIES DISPENSER RETROFIT for HEALY SYSTEMS, INC.

# MODEL VP1000

# VAPOR RECOVERY ASSIST SYSTEM

**(KIT Z080)**

# OUTLINE

**NOTICE: USE THIS PROCEDURE IF CONVERTING A WAYNE-VAC™ VAPOR RECOVERY ASSIST SYSTEM TO A HEALY VAPOR RECOVERY ASSIST SYSTEM**

This Manual is to be used for new, replaced, retrofitted, or reconditioned dispensers/pumps.

**See Healy Systems Kit Z078 For Dispensers With Balance Systems**


1. **Purpose**
2. **Safety**
3. **Models Covered**
4. **Parts Lists**
5. **Tools Required**
6. **Dispenser Access**
7. **Survey Scope Of Work**
8. **Wayne-VAC Removal**
9. **Installing The Healy VP1000 System**
10. **Connecting Vapor Lines**
11. **Installing The Sealed Nipple Assembly**
12. **Wiring Inside The Electronics Compartment**
13. **Connecting Healy Systems Dispensing Equipment**
14. **VP1000 Theory Of Operation**
15. **Testing The System**
16. **Trouble Shooting The VP1000**
17. **VP1000 Vane & Rotor Service & Replacement Guide**

**Start-up / New Installation / Warranty / Annual Testing Form**



Franklin Fueling Systems
3760 Marsh Road
Madison, Wisconsin 53718 USA
ARB Approved Installation, Operation and Maintenance Manual

Website: http://www.franklinfueling.com
Email: sales@franklinfueling.com
Telephone: 800-225-9787
Fax: 608-838-6433


HEALY

Franklin Fueling Systems

## 1. PURPOSE:

**This procedure describes the tools, methods and skill levels required to install a Healy Systems, Inc. Model VP1000 Vapor Recovery pump in vapor ready Wayne Dresser Harmony™ series gasoline dispensers. Only Healy trained and certified contractors will be able to perform these retrofits or warranty will be void. The installer shall be a skilled petroleum technician and thoroughly familiar with the requirements of State, Federal and local codes for installation and repair of gasoline dispensing equipment. Also, they shall be aware of all the necessary safety precautions and site safety requirements to assure a safe and trouble free installation. NOTE: All electrical and hydraulic plumbing fittings referred to in these instructions must be UL "listed" or "recognized" for the purpose.**

**Note:** Installations of vapor piping into the inlet side of the vacuum pump should be sloped such that the natural flow direction is toward the vacuum pump. However, it is permissible to have a piping slope tilted away from the vacuum pump provided that all other applicable tests (Dispenser integrity and V/L) meet the specifications outlined in the appropriate section of the Executive Order and ***ARB Approved Installation, Operation and Maintenance Manual***.

**Note:** For installations with In-Station Diagnostics (ISD), the vapor flow meter shall be installed on the down stream side of the vacuum pump. Every effort shall be made to install the vapor flow meter so that vapor piping between the vacuum pump and the vapor flow meter is sloped such that the natural flow direction is toward the vapor flow meter. However, it is permissible to have the piping slope away from the vapor flow meter provided that all other applicable tests (Dispenser integrity, V/L and ISD Operability) meet the specifications outlined in the appropriate section of the Executive Order and ***ARB Approved Installation, Operation and Maintenance Manual***.

## 2. SAFETY: Before installing the equipment, read, understand and follow:

- **The National Electrical Code (NFPA 70)**
- **The Automotive and Marine Service Code (NFPA 30A)**
- **Any national, state and local codes that may apply.**

**The failure to install the equipment in accordance with NFPA 30A and 70 may adversely affect the safe use and operation of the system.**

**Accurate, sound installations reduce service calls: Use experienced, licensed contractors that practice accurate, safe installation techniques. Careful installation provides a sound troubleshooting framework for field repairs and can eliminate potential problems.**

1. **Read all instructions before beginning.**
2. **Follow all safety precautions:**
   - **Barricade the area.**
   - **Do not allow vehicles or unauthorized people in the area.**
   - **Do not smoke or allow open flames in the area.**
   - **Do not use power tools in the work area.**
   - **Wear eye protection during installation.**
3. **Use circuit breakers for multiple disconnects to turn off power and prevent feedback from other dispensers.**

**3. MODELS COVERED:**

**Wayne-Dresser Harmony™ series dispensers, all options except suffix "O", non vapor ready and Balance systems. The addition of the Healy Systems VP1000 to the Harmony dispenser will increase the current draw of the dispenser by 2 amps. Use the label supplied to note this change.**

**4. PARTS LISTS: (See Photo A)**

**1 VP1000 Vacuum Pump**

**1 1365A Wire Harness / MC100 Series Interface Module Assembly**

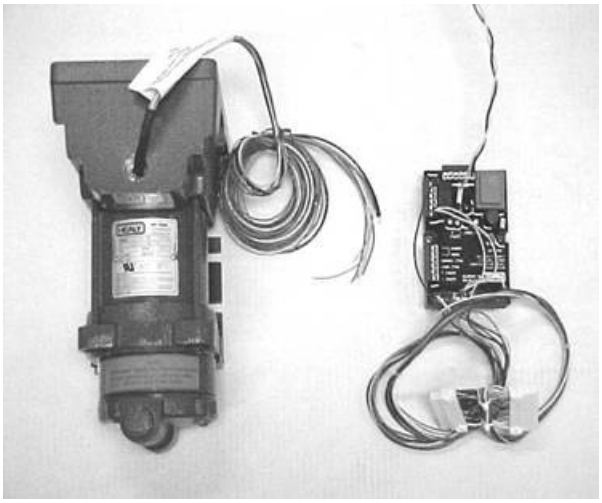

**Photo A**

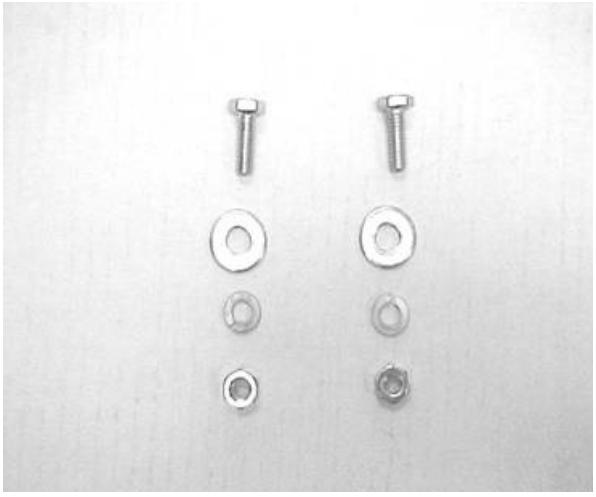

**Photo B**

**Photo C**

**Photo D**

**HARDWARE KIT Z080H: (See Photo B)**

| | |
|---|---|
| 2 | 1/4-20 bolts, washers, lock washers and nuts |

**ELECTRICAL KIT Z080E: (See Photo C)**

| | |
|---|---|
| 4 | 4” Tyraps |
| 1 | Current change label (p/n 1405) |
| 7 | Wire nuts |
| 1 | 8-32 x 3/4” machine screw, washer & nut |
| 1 | 1/2” male NPT x 3/4” female NPT electrical reducer fitting |
| 1 | #1346 potted conduit nipple |
| 1 | #8 Ring tong terminal |
| 1 | Notice label (p/n 1406) |
| 1 | UL Listed label (p/n 1410) |

**VAPOR KIT Z080V: (See Photo D)**

| | |
|---|---|
| 2 | 3/8” NPT x 5/8” flare straight fittings |
| 3 | 1/2” NPT x 5/8” flare elbow fittings |
| 1 | 1/2” NPT x 5/8” flare straight fitting |
| 3 | 3/4” NPT x 5/8” flare straight fittings |
| 1 | 5/8” x 5/8” x 5/8” flare tee |
| 12’ | 5/8” OD copper tube, type ‘L’ |
| 1 | 1/4” pipe plug |
| 1 | 3/8” pipe plug |
| 1 | 1/2” close nipple |
| 1 | 1/2” x 1/4” x 1/2” reducing tee |
| 1 | 1/2” ball valve |
| 1 | 3/4” elbow |
| 12 | 5/8” flare nuts |

**MATERIALS SUPPLIED BY INSTALLER:**

**Thread Sealing Compound – non-Setting, UL Classified for use on all tapered thread, Non-electrical, plumbing fittings.**

**Teflon tape**

**5. TOOLS REQUIRED:**

- **1/2” or 3/8” ratchet set w/ sockets 1/4” through 9/16” + 3” extension**
- **9” lineman’s pliers**
- **Assorted open end wrenches 1/4” through 3/4”**
- **Wire cutters/strippers 18 AWG and 26 AWG**
- **1-1/8” greenlee type sheet metal punch**
- **Mechanical hand drill (egg-beater type)**
- **Assorted drill bits 1/16” through 7/16”**
- **Assorted screwdrivers (flat blade-one must be 1/8” wide and Phillips)**
- **5/8” copper tube bending tool**
- **5/8” copper tube flaring tool**
- **Copper tubing cutter**
- **Electrical multi-meter**
- **Small hand brush (1-1/2” thick, for clearing chips)**
- **12” adjustable wrench**
- **10” pipe wrench**
- **Tape measure**
- **Allen wrenches**
- **#20 torx bit**
- **Whitney type hand sheet metal punch with 3/16” punch and die set**

**6. DISPENSER ACCESS:**

- **Secure Dispenser Access keys from Station Management.**
- **Lock-out and tag-out all electrical power to dispenser being modified.**
- **Remove the Top Cladding and Upper Shield in order to expose upper vapor tubing attached to the outlet castings.**
- **Remove both Upper Column Covers above nozzle holsters in order to expose Wayne-VAC™ vacuum pumps.**

- **Remove the Lower Column Cover below the nozzle holster on the "A" side of the dispenser. This is the side that the vapor tubes from the out port of the Wayne-VAC™ vacuum pumps are connected to a vapor tee mounted at the base of the dispenser, see photo F.**
- **Remove the Upper Cladding covering the "J" Box, see photo E.**
- **Remove the "J" Box cover.**
- **Remove the Door Cladding assembly and the Access Door assembly in order to expose the electronics compartment.**

**7. SURVEY– Scope of Work:** ***Perform this step before beginning steps 8 thru 12.***

**Read and familiarize yourself with the theory of operations sheet and wiring instructions for the VP1000 Vapor Pump. The installation of the pump is on the sheet metal shelf over the junction box, with the pump cover facing the "A" side of the dispenser, see photo E. This is the side that the vapor tubes from the out port of the Wayne-VAC™ vacuum pumps are connected to a vapor tee mounted at the base of the dispenser, see photo F. From this survey, you will have an indication of where the vapor plumbing fittings need to go and where the holes need to be drilled in the adjoining sheet metal to allow the vapor pipes from the pump to pass through to the hydraulics compartment. Notice also in the electrical junction box, on the bottom right side, there is a potted conduit nipple which contains the Wayne-VAC™ wiring harness (for pump on "A" side) that you will remove to install the Healy potted conduit nipple, See Section 11.** ***CAUTION: ALL POWER TO DISPENSER UNDER MODIFICATION SHOULD BE COMPLETELY DISCONNECTED AND CAPPED OFF AT JUNCTION BOX TO AVOID UNINTENTIONAL FEEDBACK FROM OTHER DISPENSERS!!***

***Photo E***

***Photo F***

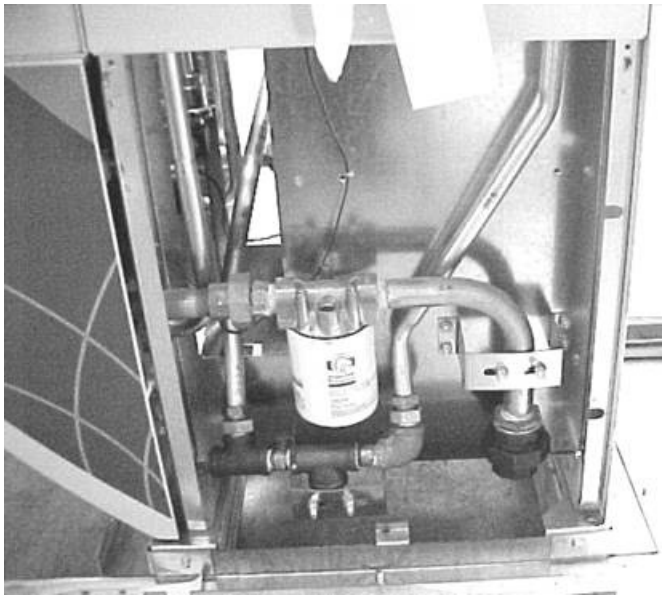

## 8. WAYNE-VAC™ REMOVAL:

- **Disconnect and lockout the power to the dispenser.**
- **Open the dispenser cabinet doors as specified in section 6 above.**
- **Close the vapor recovery (Stage II Vapor return line) impact valve. If there is no impact valve, be sure to have proper plugs or caps available to plug the Stage II line before disconnecting the Wayne-VAC™ equipment.**
- **Unscrew the flare nuts holding the vapor tube into the inlet of both VAC pumps, see photo G.**
- **Unscrew the flare nuts from the vapor port of both outlet castings and remove the vapor tubes, see photo H.**
- **Remove the 3/8" NPT x 3/8" flare elbow fittings from both outlet castings, see photo H.**

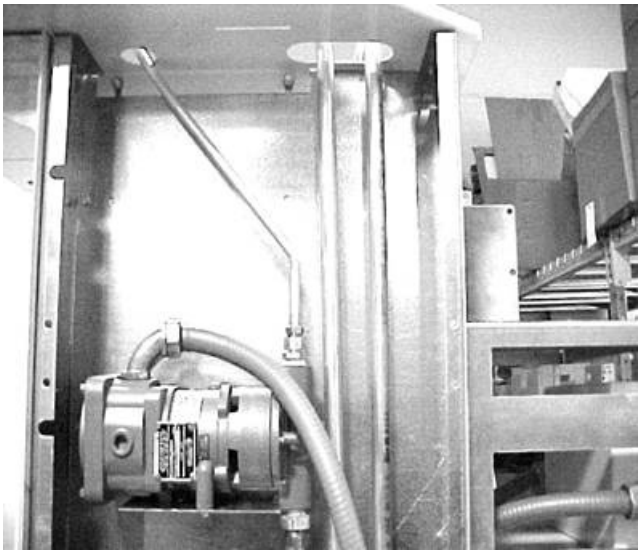

**Photo G**

**Photo H**

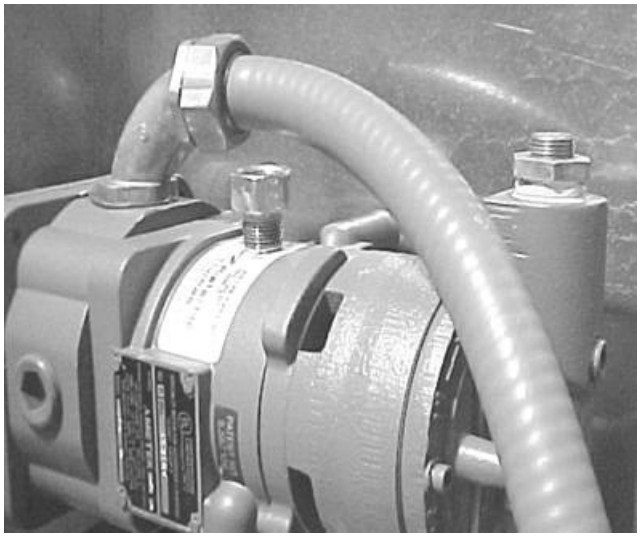

**Photo I**

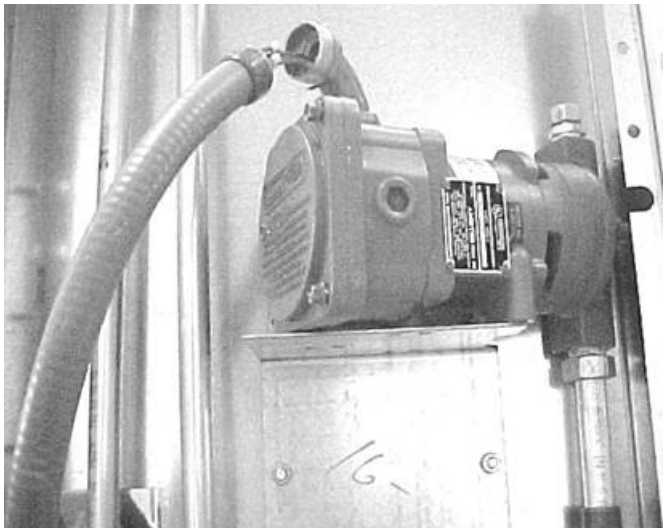

**Photo J**

- **Remove the 3/8” NPT x 3/8” flare straight fitting from the inlet of the VAC pump on the “B” side and install the 3/8” pipe plug supplied in the Healy Vapor Kit, tighten securely, see photo I.**
  - **On the “A” side VAC pump, back off the electrical nut from the elbow attached to the pump and the flare nut holding the vapor tube in the out port of the pump, see photo J.**
  - **Remove the (3) sheet metal screws that hold the pump to the bracket.**
  - **Remove the electronics cover, secured with (4) bolts, from the pump.**
  - **Disconnect harness wires from the pump wires and pull through the elbow. Let the electrical tube hang for future use. Remove the elbow and set aside for future use.**
  - **Lift the VAC pump off the outlet vapor tube and set aside.**
  - **Remove the VAC pump mounting bracket.**
  - **Unscrew the flare nut holding the outlet vapor tube in the bottom of the dispenser and remove the vapor tubing, see photo F, right side when facing the dispenser.**
  - **Remove the 3/4” NPT flare fitting from the 3/4” elbow and install a 3/4” NPT x 5/8” flare straight fitting supplied in the Healy Vapor Kit, tighten securely.**
  - **In the “J” box, bottom right, you will see the potted nipple containing the wire harness that was previously disconnected from the Wayne-VAC™ pump. Follow this harness from the bottom of the potted nipple (under the “J” box) to the Wayne-VAC™ electronics control board #887227; remove the (2) connectors from the board and also the green ground wire attached to the chassis.**
  - **Remove the coupling (under the “J” box) from the potted nipple and wire harness that was just disconnected from the Wayne-VAC™ electronics control board #887227.**
  - **Remove the potted nipple from the “J” box and pull the wire harness out of the flexible, non-metallic electrical tubing and elbow, set aside.**
  - ***IMPORTANT*: In the “J” box, bottom left, you will see the potted nipple containing the wire harness that controls the Wayne-VAC™ pump on the “B” side of the dispenser. Follow this harness from the bottom of the potted nipple (under the “J” box) to the Wayne-VAC electronics control board #887227, remove the (2) connectors from the board and neatly bundle up out of the way.**

# WARNING

**This retrofit kit requires drilling in a Hazardous Location. Insure that all power to the dispenser has been turned off. Open all access doors for increased airflow. Use only sharp drill bits; dull bits may generate excessive heat. Use air powered drill at low RPM's. If an electric drill is used, a suitable UL Listed Gas Detector must be used to ensure the area is below 25% of the Lower Explosive Limit. Do not drill if gasoline odors are present.**

**If drilling in the electronics cabinet, carefully collect and remove all metal shavings that may be inside the cabinet. Failure to remove the shavings could result in an electrical shock hazard. Before drilling, check to ensure that no wires or fluid containing parts (i.e. product tubing) is located on the backside or near the chuck of the drill.**

## 9. INSTALLING THE HEALY VP1000 SYSTEM

**NOTICE: WHEN DRILLING HOLES, ASSURE THAT THERE ARE NO HAZARDOUS VAPORS PRESENT AND DO NOT ALLOW CHIPS TO FALL DOWN INTO THE HYDRAULICS AREA.**

- **In order to get the vapor tubing from the pump into the vapor plumbing area, it is necessary to drill or punch two 1-1/8" holes on the sheet metal column near the edge of the shelf, see photo E. Use a tape measure and mark the centerline of the holes to be 1-1/4" in from the front edge of the sheet metal column. Measure down from the top of the column 5-1/2" and mark on the 1-1/4" centerline, measure down an <u>additional</u> 6-3/4" and mark on the centerline. These marks are the centers of the holes for the vapor pipes going to the VP1000. DO NOT DRILL – verify positions in the next steps.**
- **Get the vapor pump and install a 1/2" NPT x 5/8" flare elbow fitting into the 'IN' and 'OUT' ports using tape, not pipe dope. Looking at the face of the pump, completely tighten both fittings so they are facing the right.**
- **Position the pump on top of the sheet metal shelf over the electrical junction box on top of the electronics cabinet, with the fittings pointing toward the hydraulics cabinet and overhanging the edge of the shelf about 1/4".**
- **Slide the pump to fit against the hydraulics cabinet and position so as to allow for matching the location of holes that need to be drilled through the sheet metal.**
- **Satisfied that the fittings and hole marks line up, remove the pump and drill the two, 1-1/8" holes, marked above.**
- **Position the pump assembly on top of the sheet metal shelf and slide over so that the ports are accessible from the hydraulics area.**

## 10. CONNECTING VAPOR LINES: (See Photos K, L, M & N)

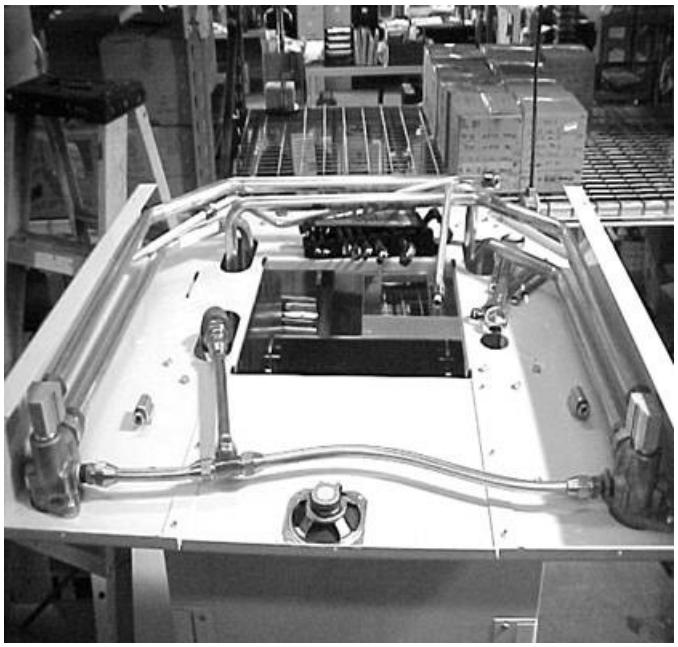

**Photo K**

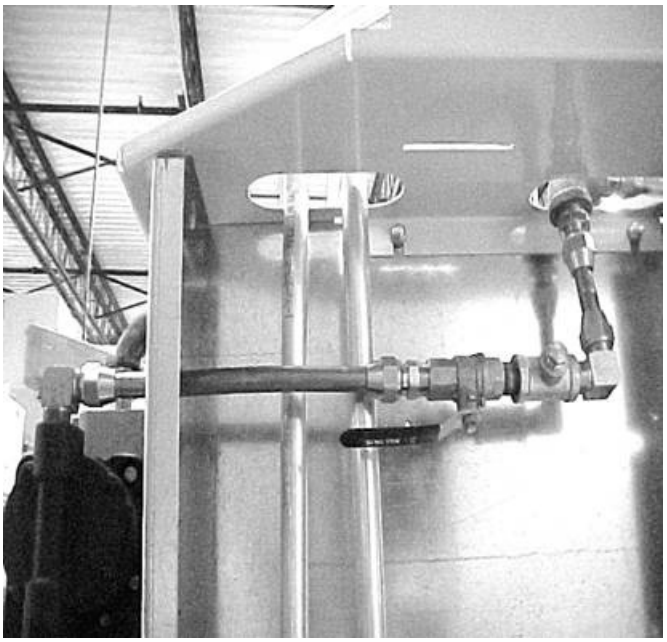

**Photo L**

- **Install a 3/8” NPT x 5/8” flare straight fitting into the vapor port of both outlet castings, see photo K.**
- **Install a 3/4” NPT x 5/8” flare straight fitting into each end of the 3/4” elbow supplied in the Healy vapor kit.**
- **Make up (3) pieces of 5/8” OD tube and attach as shown in photo K. The lengths are approximately as follows: 15-1/2” from the right outlet casting, 4-1/2” from the left outlet casting and 10” from the 3/4” elbow to the tee. Do not block column area.**
- **Make up the following assembly, see photo L. Note: The ball valve handle closes toward you. Install a 1/2” NPT x 5/8” flare straight fitting to the left side of the ball valve, install the 1/2” close nipple to the right side then the 1/2” reducing tee and the 1/2” NPT x 5/8” flare elbow – completely tighten the tee with the 1/4” branch facing up and the elbow also facing up, install the 1/4” pipe plug into the branch.**
- **Make up a piece of 5/8” OD copper tube that will go from the flare elbow on the inlet of the VAC pump, through the upper 1-1/8” hole in the column to the straight flare fitting on the ball valve assembly so that when installed and secured, positions the flare elbow on the ball valve assembly in a straight line with the straight flare fitting that’s attached to the 3/4” elbow of the upper vapor manifold. Install and tighten with the ball valve assembly in position as shown in photo L.**
- **Make up a piece of 5/8” tube to connect the flare elbow on the ball valve assembly to the straight flare fitting that’s attached to the 3/4” elbow of the upper vapor manifold. This piece should be made so that when installed the ball valve assembly and tubing should be horizontal or slightly pitched toward the pump to avoid liquid traps. Install and tighten.**
- **Mark the location of the mounting bolt holes from the VAC pump base on the shelf, unscrew the flare nut on the inlet and move the VAC pump out of the way. Drill two 5/16” holes (one on each side of the bracket) required for mounting the pump.**
- **Reposition the VAC pump and reconnect the flare nut to the inlet port, then install the two 1/4-20 bolts, washers, lock washers and nuts to secure the pump.**

Photo M

Photo N

- **Measure and cut appropriate length of 5/8” tubing to reach from the 5/8” flare elbow on the outlet of the VAC pump, through the lower 1-1/8” hole in the column to the 5/8” flare straight fitting installed in the 3/4” elbow at the base of the dispenser, using a 90 degree bend, see photos M & N.**
- **Install and tighten making sure the horizontal portion of the tube attached to the outlet is either horizontal or slightly pitched downward away from the pump to avoid liquid traps.**

**11. INSTALLING THE SEALED NIPPLE ASSEMBLY: (See Photos O & P)**

**NOTICE: THE INTERFACE MODULE THAT IS SUPPLIED HAS A HARNESS ATTACHED AND A WIRING PLUG FOR THE AC CONNECTIONS. ALSO SUPPLIED IS THE SEALED NIPPLE ASSEMBLY (1346) THAT MUST BE USED BETWEEN THE DIVISION 1 AREA (THE ELECTRONICS COMPARTMENT) AND THE DIVISION 2 AREA (THE SPACE ABOVE AND OUTSIDE THE ELECTRONICS COMPARTMENT).**

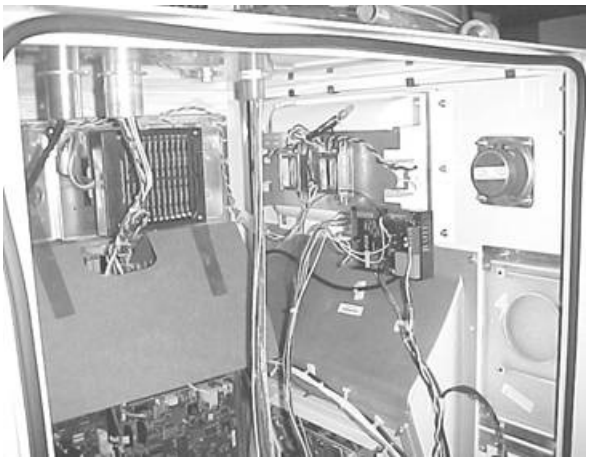

Photo I

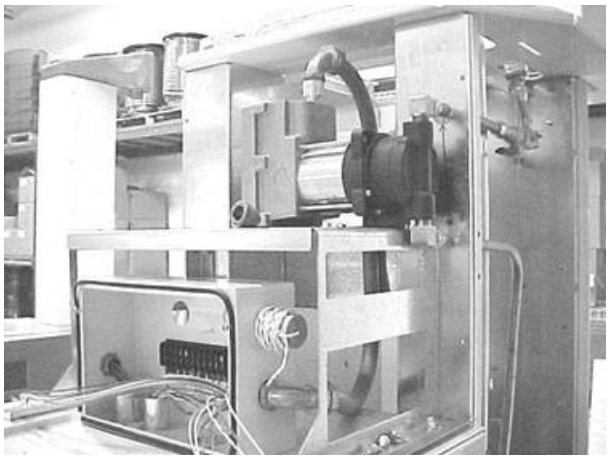

Photo P

- **Get the 1346 sealed nipple assembly and carefully remove the first nut and washer over the wires. Thread these wires from inside the electronics compartment, up through the hole inside the ”J” box, (bottom right) where the Wayne VAC™ potted nipple was removed. Carefully replace the washer and nut over the wires and secure the unit into the box.**
- **At the VP1000, get and install the 1/2” male x 3/4” female adaptor over the wires coming from the motor. Do not use pipe dope on these fittings and be sure there is at least five full threads of engagement of the fittings in their respective couplings.**
- **Thread the pump wires through the elbow that was removed from the Wayne VAC™ motor electronics housing and screw the threaded end with the “O” ring into the 1/2” male x 3/4” female adaptor installed in the above step. Tighten so that the elbow faces away from the “J” box, see photo P.**
- **Get the electrical tube that was left hanging during the Wayne VAC™ removal, and route up to the VP1000 VAC pump as shown in photo P.**
- **Run the electronic wires from the VP1000 through the electrical tube and into the “J” box as shown. Reconnect the electrical tube to the elbow on the VAC pump.**
- **In the “J” box, leave about 6” of wire on both the wires coming from the motor and from the sealed nipple, cut off excess wire and strip approximately 1/2” of insulation from all wires.**
- **Use wire nuts to join the wires, color for color, together. There may be some extra wires in some sealed nipples, cap these off and dress aside.**
- **Keep wires clear of pinch points and from interference, make sure no wires overhang the door openings.**
- **Replace the cover on the junction box.**

## 12. WIRING INSIDE THE ELECTRONICS COMPARTMENT: (See Photos Q, R, S, & T)

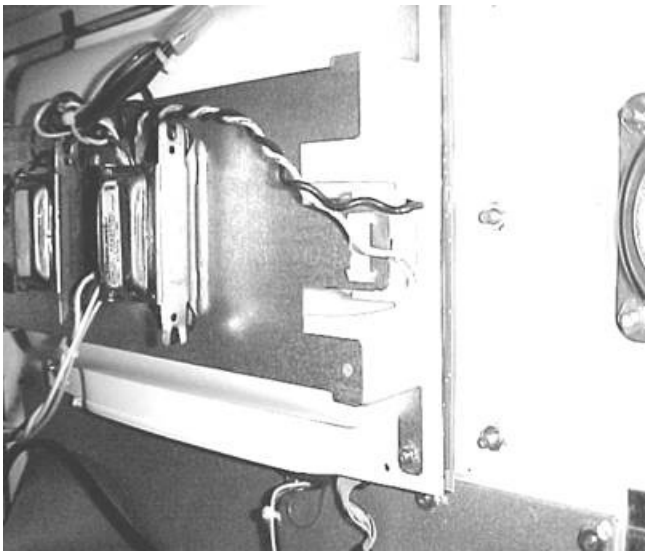

**Photo Q**

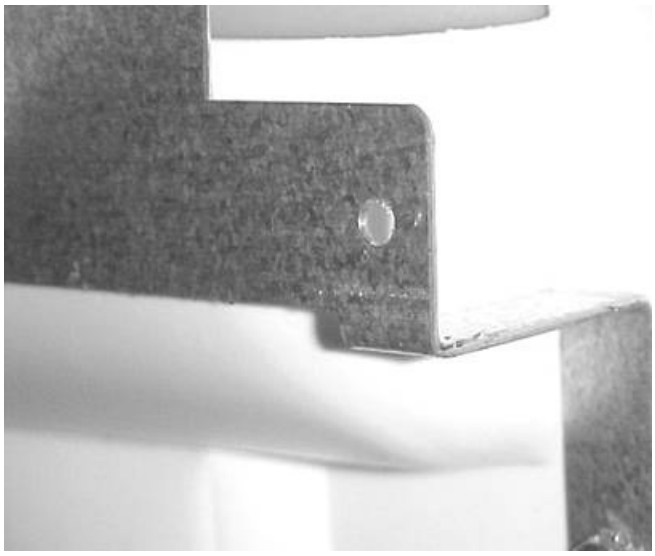

**Photo R**

- **In the electronics bay, locate the light assembly on the upper right side of the cabinet, see photo Q. In photo R, notice the 3/16" hole that must be made to accept the module mounting screw. Punch this hole approximately as shown. If drilling, be sure no hazardous vapors are present and use a coffee cup or other suitable container to prevent metal chips from falling inside the cabinet.**

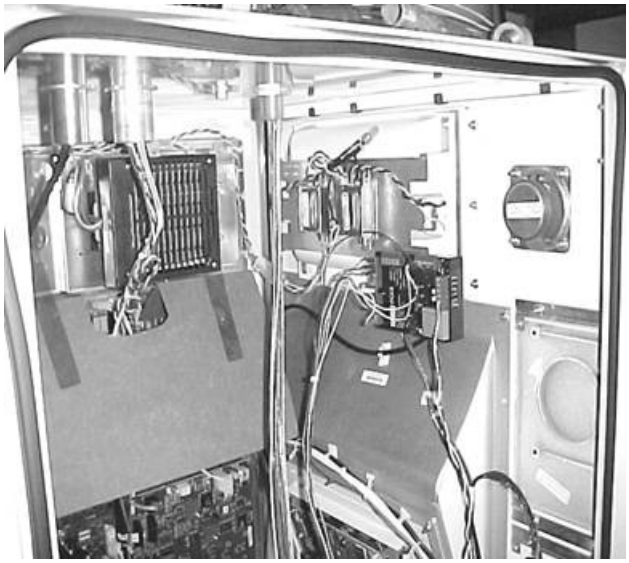

**Photo S**

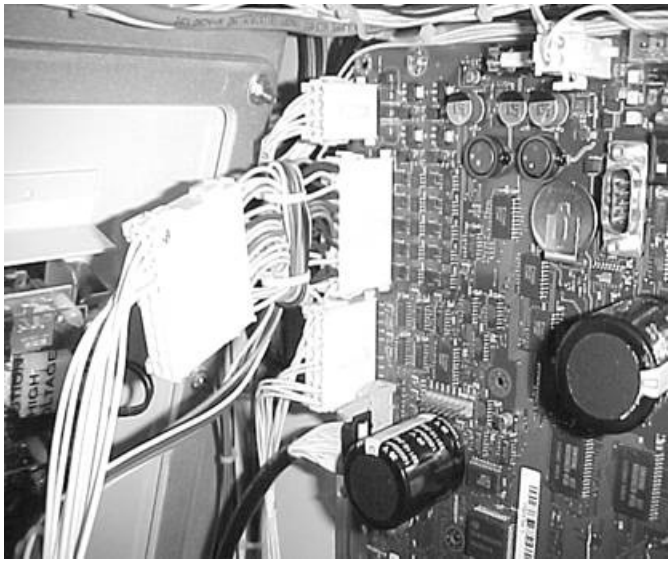

**Photo T**

- **Leave the wires coming from the sealed nipple assembly at least six inches longer than necessary to reach the bottom of the compartment. Cut off excess and strip all wires 1/2".**

- **Connect the wires from the sealed nipple to the interface module as follows:**
  - **Black wire to ‘motor ‘ on module**
  - **White wire to ‘neutral’ on module**
  - **Red wire (either) to ‘output 1’ on module**
  - **Red wire (other) to ‘output 2’ on module**
  - **Orange wire to ‘fault common’ on module**
  - **Purple wire to ‘fault input’ on module**
  - **Green wire needs a #8 ring tong lug installed and connected to any chassis ground (frame)**
  - **Some sealed nipples may have some extra wires, cap these and bundle them neatly out of the way.**
- **The black and white twisted pair of wires with a connector should be connected to an available AC outlet on the dispenser Relay Board #887225.**
- **The male/female multiconductor cable that is wired to the interface module is routed up to the computer board # 173976, see photo T. Disconnect the valves cable that’s in the J3 connector and install in the female side of the double connector on the harness. The entire assembly is then installed back into J3 on the Computer board. WIRING IS COMPLETE.**
- **Mount the interface module as shown in Photo S using the 8-32 x 5/8” screw, washer and nut supplied in the electrical kit.**
- **Install the following labels supplied:**
  - **NOTICE label for current increase (1405), install on the frame rail near the existing power consumption label.**
  - **Large NOTICE label (1406) relating to the vapor recovery upgrade and how to reset the electronic module should be installed near the module, where it will be readily visible to a service technician on the junction box cover.**
  - **UL, retrofit kit identification number (1410), install on the electronic module.**

## 13. CONNECTING HEALY SYSTEMS DISPENSING EQUIPMENT

- **Completing the connection of Healy Systems dispensing equipment requires the installation of Healy Systems Phase II dispenser adaptors, hoses and nozzles (Hanging Hardware).**
- **If applicable, remove existing non-Healy hanging hardware (from the dispenser product outlet adaptor to and including the nozzles).**
- **Vapor ready dispensers will require a Healy Systems adaptor to make the hose threads compatible with other Healy Systems equipment. Install following instructions packed with the adaptor. Various adaptors and pigtails are available, depending on how the dispenser is configured: M34 metric (Healy designation F3 or S3) or balance ready (Healy designation S4).**
- **Healy Vapor Recovery Hoses are available in various lengths to satisfy local ordinances and still provide "far side" fueling capability. Install these following instructions contained on the shipping box.**
- **Breakaways are required: Install either Model 8701-VV breakaway or Model 807 swivel breakaway; install using the instructions supplied with the unit.**
- **The Healy Systems nozzle Model 900 (EVR) is the only nozzle necessary to complete the upgrade. Check to be sure the nozzle hanger is mounted in the highest position. Be sure to check for proper fit in the nozzle holster and that the nozzle can be locked in the off position. Also, be sure that when the nozzle is locked, that the dispenser can not be activated from the locked position.**

## 14. VP1000 THEORY OF OPERATION

**The Healy Systems VP1000 is a self-contained rotary vane pump, designed for gasoline vapor recovery utilizing various parts of the Healy System Vapor Recovery product line. It is intended for use by either OEM dispenser/pump manufacturers or as an after market add-on to make existing equipment compatible with Healy System technology. In order to convert to 'others' equipment, an electronic interface is required to adapt the targeted pump/dispenser to the new vapor recovery equipment. The interface senses when authorization to dispense has been given and sends signals to the motor to operate at a low speed for one hose, or a higher speed for two hoses. It also functions to shut off the pump/dispenser if it senses that the vapor pumpis not operating properly. The vacuum is regulated at a level sufficient to clear liquid gasoline from the vapor path in MPD applications. The actual amount of vapors withdrawn is controlled by the Healy nozzle, itself, in response to the liquid gasoline flow rate.**

## MOTOR SPECIFICATIONS

| | |
|---|---|
| Horsepower | 1/8 |
| Voltage | 120VAC |

## INTERFACE SPECIFICATIONS

| | |
|---|---|
| Input voltage | 120 VAC |
| Relay current capacity | 5A AC |
| Input signals | 120 VAC |
| Motor Input signal | 5 VDC @ 20 Hz 50% Duty Cycle |

**15. TESTING THE SYSTEM:**

- **Carefully review all work completed, being sure all mechanical joints are thoroughly tightened and electrical connections sealed.**
- **Open the product crash valves and restore power to the dispenser.**
- **With the power on, but no nozzles authorized, the VP1000 should not be running (unless the ambient temperature is below 40°F), but the power LED (yellow) should be energized on the interface module.**
- **Authorize one handle and the vacuum system should activate when the gasoline flow control valve is engaged. Repeat for all other nozzles, individually testing each nozzle on each side of dispenser. With each authorization, one of the green LED's on the interface module should illuminate and the VP1000 activate.**
- **Note: For unihose dispensers, conduct individual tests for each product grade on each side of the dispener to ensure that the same LED activates for all grades on the same side. If the other LED activates, wiring needs to be corrected.**
- **Authorize one nozzle and listen to the speed of the VP1000. With only one nozzle activated, the speed will be slower than if a nozzle on <u>each side</u> is activated. Activate a nozzle on the other side of the dispenser and listen for the speed to change.**
- **To test the tightness of the vapor plumbing installed on the suction side of the system requires a 0-100" water column gauge. Connect the gauge into the 1/4" test port of the reducing tee installed earlier in section 10 Photo L. Continue by following and completing the START-UP / NEW INSTALLATION / WARRANTY / ANNUAL TESTING FORM.**

## 16. TROUBLESHOOTING THE VP1000:

- **Use extreme care and caution when performing the tests listed below. If 120 VAC is accidentally applied to the fault or DC terminals, the module will be destroyed.**
- **With power applied to the dispenser, but no products authorized, there should be 120 VAC between neutral and 120 VAC on the module terminal strip.**
- **As above, with any product authorized, there should be single speed power applied to the VP1000. Verify this by checking for 2-3 VDC from OUTPUT 1 (RED WIRE) to FAULT COMMON (ORANGE WIRE), (or from OUTPUT 2 TO FAULT COMMON) also; one GREEN LED should be illuminated. With a second product authorized on the opposite side of the dispenser *i.e.* one product on each side, the motor should operate at higher speed and there should be 2-3 VDC on both output 1 and 2 (to fault common) and both GREEN LED's should be illuminated.**
- **With the pump running, a fault can be simulated by shorting, with a jumper wire, the "FAULT INPUT" (purple wire) to FAULT COMMON (orange). This should cause the motor to shut off, the solenoid valves to lose power and the dispenser to shut down. Also, as long as the short is maintained, the red LED will be illuminated. Removing the short will not automatically reset the module. To reset the module, remove the short, remove power to the dispenser for twenty seconds and restore power. The module should now be reset and the red led extinguished. This can also be accomplished by using the power reset (PWR RESET) on the module.**
- **If diagnosing a problem where the LED is already illuminated, a steady light indicates a low current condition, therefore expect a vane or rotor problem. If the LED is blinking, that indicates a high current condition and would expect to find a jammed rotor or vapor line flooded with product. See Start-up / New Installation / Warranty / Annual Testing Form.**
- **The electronics of the motor will make three attempts to have a successful start of the motor. If it detects a problem, on the fourth unsuccessful start, it will short the fault line to signal minus (DC-) and shut down the electronics.**

**MC 100 Interface Module**

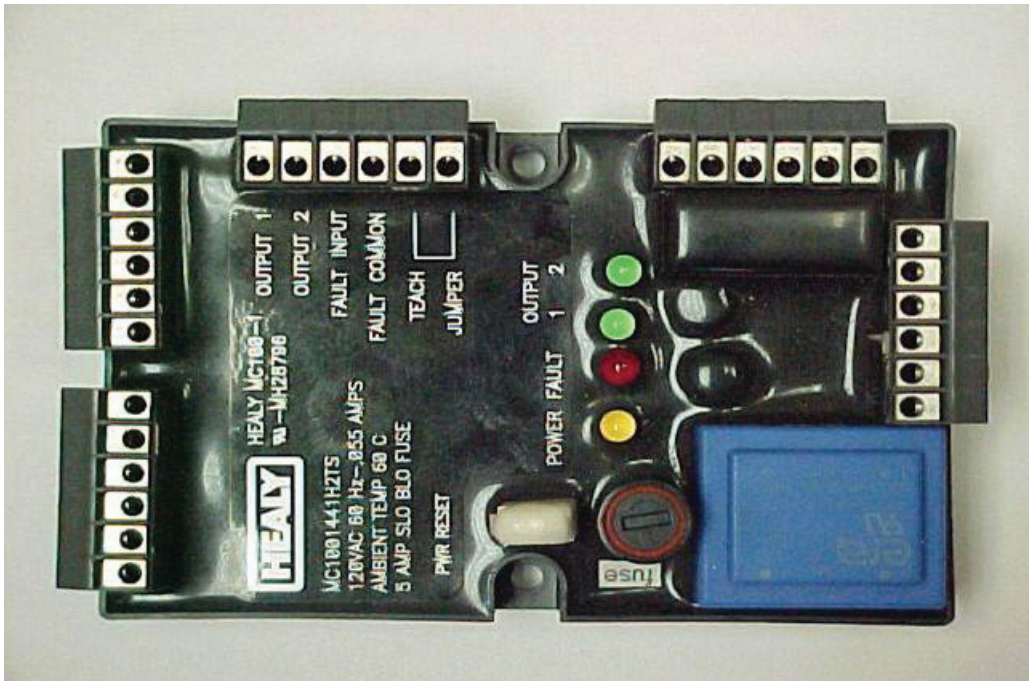

## 17. VP1000 Vane & Rotor Service & Replacement Guide

**Caution** **Disconnect power before beginning service.**

1. The work area **must** be clean and have sufficient lighting.
2. Disconnect the vapor piping connected to the **IN** and **OUT** ports of the VP1000 cover assembly.
3. Remove the four Allen head screws and lock washers that secure the pump cover assembly to the pump housing and remove the cover carefully.

**Caution** **Use a spill cloth when removing the cover, as there may be some gasoline inside the pump cavity**.

4. Carefully turn the rotor assembly by hand until the shaft key notch is at the 12 o'clock position. (See Figure 1)
5. Remove the rotor, vanes and shaft key from the pump housing.

**Note:** Place your hand or a container under the rotor while removing. Do not use any sharp objects that would scratch the surfaces of the pump cavity, pump shaft, rotor, or vanes.

6. Rotate the shaft by hand. If the shaft does not rotate freely, the entire vacuum pump needs replacement (p/n VP1000-5).
7. If the rotor and vanes are cracked, chipped, excessively worn or excessively dirty, the rotor and vanes should be replaced because cleaning will not remedy these conditions (p/n VP1000VRC or VP1000VRC-P).
8. If there is no visible damage, use a lint-free cloth with isopropyl alcohol to clean the rotor and vanes.
9. Using a lint-free cloth with isopropyl alcohol, thoroughly clean: the inside of the pump ring and rear of the pump cavity, the rotor shaft, and the inside of the pump cover.
10. Reposition the shaft (if necessary) so that the shaft key notch is in the 12 o'clock position. Install the cleaned original or new shaft key onto the shaft.
11. Carefully install the cleaned original or new rotor onto the shaft followed by the cleaned original or new vanes into the rotor.

**Note:** The rotor assembly should slide on to the shaft easily, without excessive force. (Rotors and vanes are reversible)

12. Lightly lubricate and install the new O-Ring for the pump housing.

**Note:** Do not allow any lubricant to get inside the pump housing.

13. Install the pump cover using the four Allen head screws and lock washers removed in step 3 and cross tighten.

**Note:** Use caution when sliding the pump cover over the O-Ring seal to prevent cutting or tearing.

14. Re-connect the vapor piping to the **IN** and **OUT** ports of the pump cover assembly that was removed in Step 2.
15. Re-apply power. Test for normal operation. (See VP1000 Vacuum Performance Test Procedure)

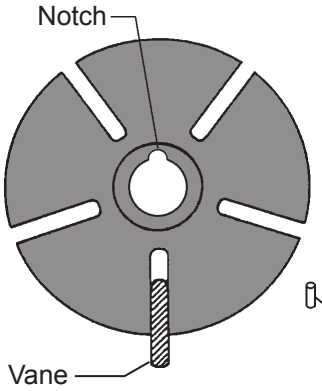


**Figure 1**
*VP1000VRC Carbon Rotor (limited availability)*

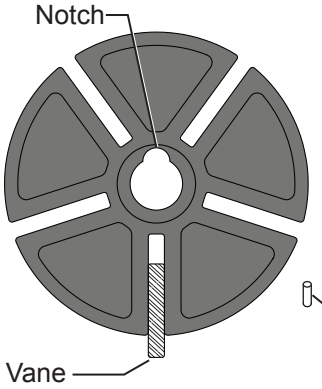


**Figure 2:**
*VP1000VRC-P Enhanced Carbon Rotor*

START-UP/NEW INSTALLATION/ WARRANTY/ ANNUAL TESTING FORM (Rev. 10/07)
HEALY VP1000 VACUUM PUMP

Date_____

**BOTH SIDES OF THIS TEST FORM MUST BE COMPLETED FOR NEW INSTALLATIONS**

- **Start-up / New installations – complete SIDE A and sections 3, 4, 5 and 6 of SIDE B. Submit forms to Healy Systems.**
- **Warranty Service or Annual Testing – complete contact information, dispenser make, vacuum pump serial # and the tests in sections 1 and 2 on SIDE A and conduct the appropriate tests specified on SIDE B. Submit Forms to Healy Systems.**

| | | |
|---|---|---|
| SERVICE COMPANY NAME | TELEPHONE | |
| SERVICE TECHNICIAN | HEALY TECH CERT # | |
| STATION ADDRESS | CITY | STATE |
| **DISPENSER MAKE** | **VACUUM PUMP SERIAL #** | |

# SIDE A

| **DISPENSER EQUIPMENT CHECKLIST - Parts A-1 and A-2** | | **YES** | **NO*** |
|---|---|---|---|
| **A-1** | Is all the installed dispenser hanging hardware listed in Exhibit 1 of Executive Order VR-201 or VR-202? | | |
| **A-2** | Proper installation of the VP1000 requires the test port and ball valve on the inlet side of the vacuum pump. Are the test port and ball valve installed correctly? | | |
| | ***If the answer to either A-1 or A-2 is NO, the Healy Warranty is Void.** | | |

## A-3

- THE FOLLOWING TEST WILL PERFORM A POSITIVE PRESSURE LEAK CHECK OF THE VACUUM PUMP, DISPENSER VAPOR PIPING, HANGING HARDWARE AND ALL NOZZLES ON BOTH SIDES OF THE DISPENSER.
- THE VP1000 OUTLET IS NOT CONNECTED TO UNDERGROUND PIPING DURING THIS TEST.

**CAUTION: REGULATE GASEOUS NITROGEN TO 2.5 PSI (~70" WC) MAXIMUM BEFORE TESTING**

1. Install a 0-100 inch water column (" wc) mechanical gauge at the VP1000 test port.
2. Use the water column gage positive (high) pressure port.
3. Gaseous nitrogen gas can now be connected to the outlet (exhaust) port of the VP1000.
4. Test pressure **cannot** exceed 70" wc.
5. **Slowly** introduce the gaseous nitrogen to a pressure between 60 – 70" wc.
6. After reaching the pressure range, close the valve supplying the gaseous nitrogen.
7. Record the initial pressure reading on the gauge - observe and record the final pressure reading after 60 seconds.
8. Leaks must be repaired when the pressure falls more than 4" wc in 60 seconds.
9. Retest until all leaks have been repaired.
10. Record test results in Section A-4.

| **A-4**<br>**PRESSURE TEST**<br>**2.5 PSI (~70"wc) Maximum** | **Initial Pressure test reading ("wc)** | **Pressure test reading after 60 seconds ("wc)** |
|---|---|---|

START-UP/NEW INSTALLATION/ WARRANTY/ ANNUAL TESTING FORM (Rev. 10/07)
HEALY VP1000 VACUUM PUMP

Date_____

**BOTH SIDES OF THIS TEST FORM MUST BE COMPLETED FOR NEW INSTALLATIONS**

- **Start-up / New installations – complete SIDE A and sections 3, 4, 5 and 6 of SIDE B. Submit forms to Healy Systems.**
- **Warranty Service or Annual Testing – complete contact information, dispenser make, vacuum pump serial # and the tests in sections 1 and 2 on SIDE A and conduct the appropriate tests specified on SIDE B. Submit Forms to Healy Systems.**

# SIDE B

| *Warranty Service*<br>Complete Troubleshooting Sections<br>**B-1 and B-2** | *Start-up/ New Installations/ Annual Testing*<br>Complete Sections<br>**B-3 through B-6** |
|---|---|

## B-1

**Control Module Fault Light**

**(Circle one) Flashing (LED) Steady (LED)**

1. All fault conditions require removal and cleaning or replacement of the rotor and vanes located inside the vacuum pumps round front cover assembly. Use the **VP1000 ROTOR & VANE SERVICE AND REPLACEMENT GUIDE** in the applicable dispenser retrofit manual of the ARB Approved Installation, Operation and Maintenance Manual for Executive Orders VR-201-K and VR-202-K.
2. Clean all surfaces including vanes, rotor, rotor housing and cover assembly.
3. Manually spin and inspect the motor shaft for bearing wear before re-installing the rotor kit.
4. Replace motor when bearings or shaft are damaged or worn.
5. Check O-ring seal before replacing rotor cover assembly.

## B-2

Re-Assemble / Reset Vacuum Pump and Module. (Power must be removed from both the vacuum pump and the **module for 20 seconds to reset the system**) using the power reset switch on the MC100 module.

## B-3

Dispenser Vapor Line Integrity Test

1. Install 0-100 inch water column (“ wc) vacuum mechanical gauge at the VP1000 test port.
2. Authorize the dispenser for fueling. The VP1000 will begin to run.
3. Close the ball valve at the pump inlet.
4. Record the initial vacuum reading on the gauge – observe and record the final vacuum reading after 60 seconds.
5. Open the ball valve at the pump inlet.
6. Leaks must be repaired when the vacuum reading falls more than 4” wc in 60 seconds.
7. Retest until all leaks have been repaired.
8. Record data in Section B-4.

**Note: If the initial vacuum reading is less than 60” wc, it could indicate a problem with the VP1000. Remove the dispenser from service. Use the troubleshooting section of the manual to investigate problem or contact the FFS Technical Help Desk at 800-984-6266 for assistance.**

## B-4

| VACUUM TEST Using VP1000 as vacuum source | Initial Vacuum test reading (“ wc) | Vacuum test reading after 60 sec. (“ wc) |
|---|---|---|

## B-5

Dispenser Vaacuum Test

With one side of the dispenser authorized (VP1000 running) and the ball valve at the pump inlet open, dispense in handheld position a minimum of 0.5 gallons of fuel into a vehicle or test tank. Record the vacuum level while dispensing. Repeat test for the other side of the dispenser.

1. Side “A” Dispensing Vacuum _____” wc
2. Side “B” Dispensing Vacuum _____” wc

**Note: If the dispensing vacuum is less than 60” wc, remove the dispenser from service. See the troubleshooting section of the manual or contact FFS Technical Help Desk at 800-984-6266 for assistance.**

## B-6

Audible Increase Test

Test the VP1000 Vacuum Pump for normal operation. Use the 6 step procedure titled, “Testing the VP1000 Vacuum Pump for normal operation using the following test procedure:” in Section 1.1 (Weekly Inspection and Testing) of the Healy Systems Scheduled Maintenance document in the ARB Approved Installation, Operation and Maintenance Manual for the Healy Phase II EVR System not Including ISD. This is to verify that the pump recognizes when both sides of the dispenser are activated for fueling.

Does the VP1000 Vacuum Pump change speeds (audible increase) when both sides are activated for fueling?

Yes No

If the answer is no, **use the troubleshooting section of the manual to investigate problem or contact the FFS Technical Help Desk at 800-984-6266 for assistance.**

| Repairs - Comments | To Obtain Returned Materials Authorization number (RMA#) Call 800-984-6266<br>Forms can be faxed to Franklin Fueling Systems Customer Service at 800-225-9787 |
|---|---|

# WAYNE-DRESSER OVATION™ SERIES DISPENSER RETROFIT for HEALY SYSTEMS, INC.

# MODEL VP1000

# VAPOR RECOVERY ASSIST SYSTEM

**(KIT Z079)**

# OUTLINE

This Manual is to be used for new, replaced, retrofitted, or reconditioned dispensers/pumps.


1. **Purpose**
2. **Safety**
3. **Models Covered**
4. **Parts Lists**
5. **Tools Required**
6. **Dispenser Access**
7. **Survey Scope Of Work**
8. **Wayne-VAC Removal**
9. **Balance Removal**
10. **Installing The Healy VP1000 System**
11. **Connecting Vapor Lines**
12. **Installing The Sealed Nipple Assembly**
13. **Wiring Inside The Electronics Compartment**
14. **Connecting Healy Systems Dispensing Equipment**
15. **VP1000 Theory Of Operation**
16. **Testing The System**
17. **Trouble Shooting The VP1000**
18. **VP1000 Vane & Rotor Service & Replacement Guide**

**Start-up/ New Installation/ Warranty/ Annual Testing Form**



Franklin Fueling Systems
3760 Marsh Road
Madison, Wisconsin 53718 USA
ARB Approved Installation, Operation and Maintenance Manual

Website: http://www.franklinfueling.com
Email: sales@franklinfueling.com
Telephone: 800-225-9787
Fax: 608-838-6433


HEALY

Franklin Fueling Systems

## 1. PURPOSE:

**This procedure describes the tools, methods and skill levels required to install a Healy Systems, Inc. Model VP1000 Vapor Recovery pump in vapor ready Wayne Dresser Ovation™ series gasoline dispensers. Only Healy trained and certified contractors will be able to perform these retrofits or warranty will be void. The installer shall be a skilled petroleum technician and thoroughly familiar with the requirements of State, Federal and local codes for installation and repair of gasoline dispensing equipment. Also, they shall be aware of all the necessary safety precautions and site safety requirements to assure a safe and trouble free installation. NOTE: All electrical and hydraulic plumbing fittings referred to in these instructions must be UL "listed" or "recognized" for the purpose.**

**Note:** Installations of vapor piping into the inlet side of the vacuum pump should be sloped such that the natural flow direction is toward the vacuum pump. However, it is permissible to have a piping slope tilted away from the vacuum pump provided that all other applicable tests (Dispenser integrity and V/L) meet the specifications outlined in the appropriate section of the Executive Order and ***ARB Approved Installation, Operation and Maintenance Manual***.

**Note:** For installations with In-Station Diagnostics (ISD), the vapor flow meter shall be installed on the down stream side of the vacuum pump. Every effort shall be made to install the vapor flow meter so that vapor piping between the vacuum pump and the vapor flow meter is sloped such that the natural flow direction is toward the vapor flow meter. However, it is permissible to have the piping slope away from the vapor flow meter provided that all other applicable tests (Dispenser integrity, V/L and ISD Operability) meet the specifications outlined in the appropriate section of the Executive Order and ***ARB Approved Installation, Operation and Maintenance Manual***.

## 2. SAFETY: Before installing the equipment, read, understand and follow:

- **The National Electrical Code (NFPA 70)**
- **The Automotive and Marine Service Code (NFPA 30A)**
- **Any national, state and local codes that may apply**

**The failure to install the equipment in accordance with NFPA 30A and 70 may adversely affect the safe use and operation of the system.**

**Accurate, sound installations reduce service calls: Use experienced, licensed contractors that practice accurate, safe installation techniques. Careful installation provides a sound troubleshooting framework for field repairs and can eliminate potential problems.**

1. **Read all instructions before beginning.**
2. **Follow all safety precautions:**
   - **Barricade the area.**
   - **Do not allow vehicles or unauthorized people in the area.**
   - **Do not smoke or allow open flames in the area.**
   - **Do not use power tools in the work area.**
   - **Wear eye protection during installation.**
3. **Use circuit breakers for multiple disconnects to turn off power and prevent feedback from other dispensers.**

**3. MODELS COVERED:**

**Wayne-Dresser Ovation™ series dispensers, all options except suffix "O", non vapor ready.**

**The addition of the Healy Systems VP1000 to the Ovation dispenser will increase the current draw of the dispenser by 2 amps. Use the label supplied to note this change.**

**4. PARTS LISTS: (See Photo A)**

**1 VP1000 Vacuum Pump**

**1 1365A Wire Harness / MC100 Series Interface Module Assembly**

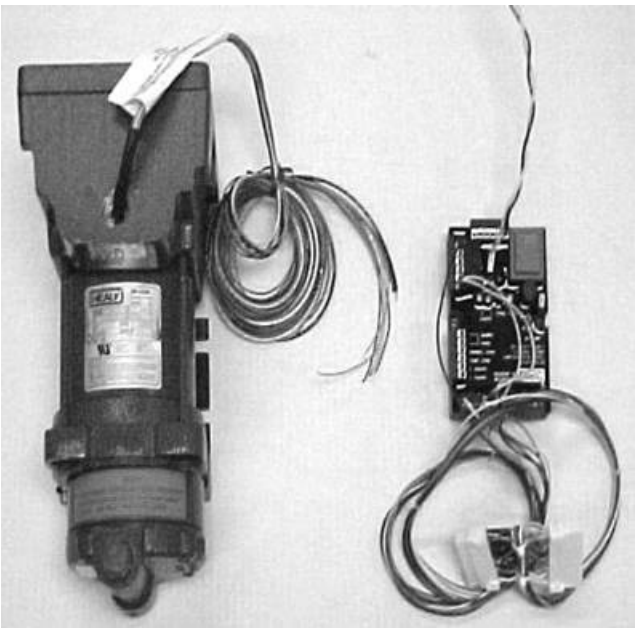

**PHOTO A**

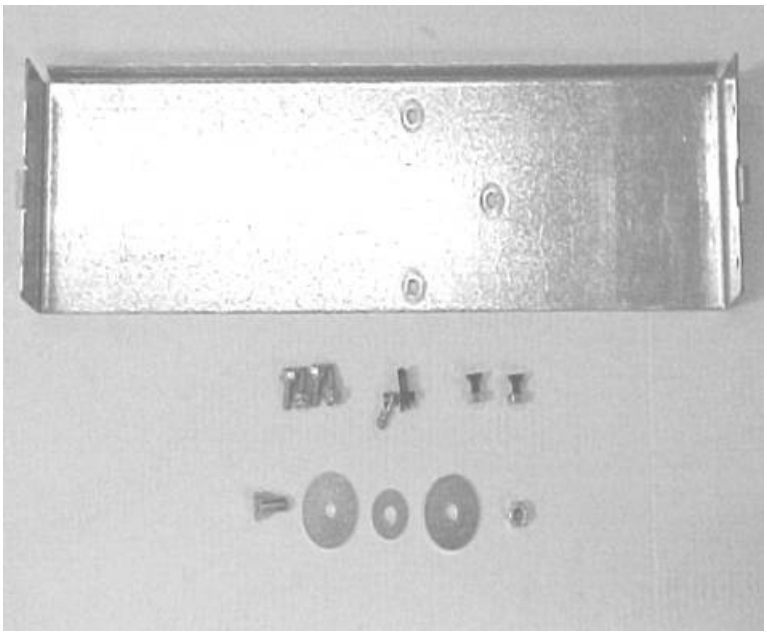

**PHOTO B**

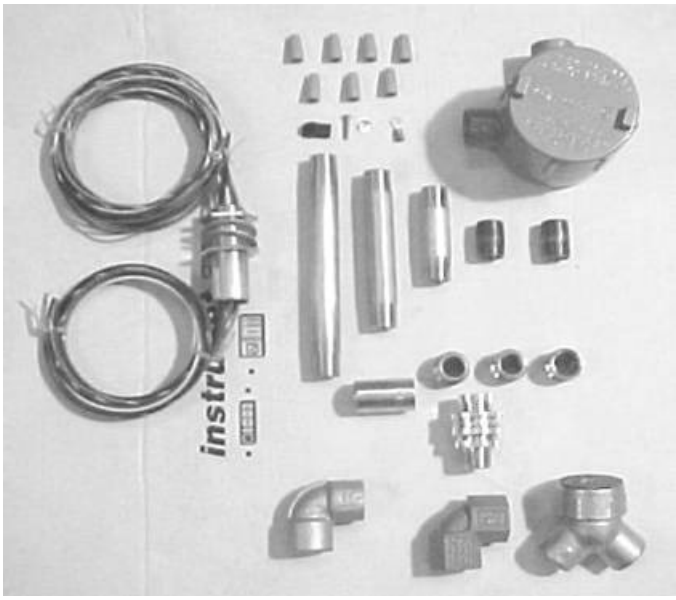

**PHOTO C**

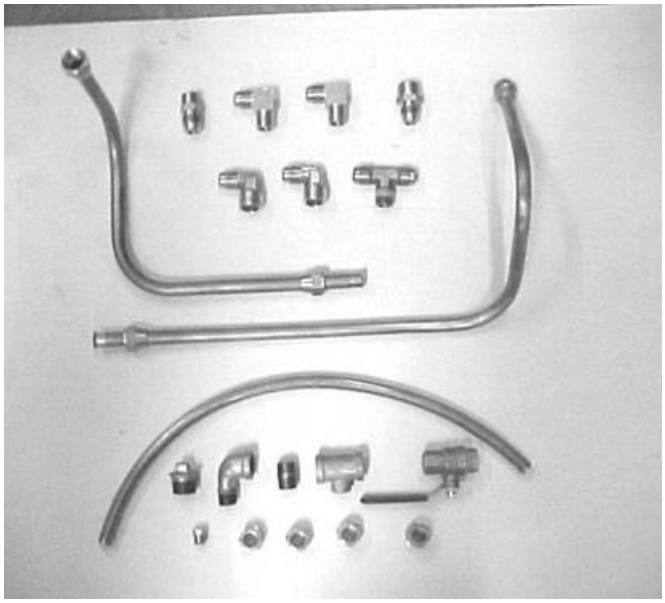

**PHOTO D**

**HARDWARE KIT Z079H: (See Photo B)**

| | |
|---|---|
| 2 ea | flat head 1/4-20 x 5/8 bolts, washers, and nuts |
| 4 | 1/4 - 20 x 1/2” sheet metal screws |
| 1 | Washer-seal assembly (For use when removing Wayne-VAC electrical) |
| 1 | Pump mounting bracket |

**ELECTRICAL KIT Z079E: (See Photo C)**

| | |
|---|---|
| 1 | Current change label (p/n 1405) |
| 7 | Wire nuts |
| 1 | 8-32 Tinnerman™ threaded fastener |
| 1 | 8-32 x 5/8” pan head screw with washer |
| 1 | 1/2” x 3” electrical nipple |
| 1 | 1/2” capped electrical elbow |
| 1 | 1/2” electrical elbow |
| 1 | 1/2” electrical union |
| 3 | 1/2” x 3/4” electrical reducing bushings |
| 1 | Explosion proof J box |
| 1 | #1346 potted conduit nipple |
| 1 | #8 Ring tong terminal |
| 1 | Notice label (p/n 1406) |
| 1 | UL listed label (p/n 1410) |
| 1 | 3/4” electrical elbow |
| 2 | 1/2” electrical close nipples |
| 1 | 1/2” electrical coupling |
| 1 | 1/2” x 5” electrical nipple |
| 1 | 1/2” x 7” electrical nipple |

**VAPOR KIT Z079V: (See Photo D)**

| | |
|---|---|
| **1** | **1/2” NPT X 5/8 flare straight fitting** |
| **2** | **1/2” NPT X 5/8 flare elbow fittings** |
| **1** | **3/4” NPT x 5/8 flare straight fitting** |
| **2** | **3/4” NPT x 5/8 flare elbow fittings** |
| **1** | **1/2” NPT x 5/8 x 5/8 flare tee** |
| **2** | **Preformed copper tube segments** |
| **2’** | **5/8” OD copper tube, type ‘L’** |
| **1** | **3/4” pipe plug** |
| **1** | **1/2” NPT street elbow** |
| **1** | **1/2” close nipple** |
| **1** | **1/2” x 1/4” x 1/2” reducing tee** |
| **1** | **1/2” ball valve** |
| **1** | **1/4” pipe plug** |
| **4** | **5/8” flare nuts** |

**MATERIALS SUPPLIED BY INSTALLER:**

**Thread Sealing Compound – non-Setting, UL Classified for use on all tapered threads, non-electrical, plumbing fittings**

**Teflon tape**

**4. TOOLS REQUIRED:**

- **1/4” or 3/8” ratchet set w/ sockets 1/4” through 9/16” + 3” extension**
- **9” lineman’s pliers**
- **Assorted open end wrenches 1/4” through 3/4”**
- **Wire cutters/strippers 18 AWG and 26 AWG**
- **1-1/8” greenlee type sheet metal punch**
- **Mechanical hand drill (egg-beater type)**
- **Assorted drill bits 1/16” through 7/16”**
- **Assorted screwdrivers (flat blade-one must be 1/8” wide and Phillips)**
- **5/8” copper tube bending tool**
- **5/8” copper tube flaring tool**
- **Copper tubing cutter**
- **Electrical multi-meter**
- **Small hand brush (1-1/2” thick, for clearing chips)**
- **12” adjustable wrench**
- **16” pipe wrench**
- **Tape measure**
- **Allen wrenches**

**6. DISPENSER ACCESS: (See Photos E & F)**

- **Secure Dispenser Access keys from Station Management.**
- **Lockout and tag-out all electrical power to dispenser being modified.**
- **Use keys to unlock and remove lower dress panels on dispenser and open access doors.**

**PHOTO E**

**PHOTO F**

**7. Survey – Scope of Work:** ***Perform this step before beginning steps 8 thru 13, (See Photo G)*** **Read and familiarize yourself with the theory of operations sheet and wiring instructions for the VP1000 Vapor Pump. The installation of the pump is on the sheet metal bracket, supplied in the hardware kit, and then installed on the right side panel in the hydraulics area when facing the "A" side of the dispenser, (this is the side with the IGEM board #173976). From this survey, you will have an indication of where the vapor plumbing fittings need to go and where the electrical tubing will need to run. Notice also on the "B" side, lower left of the electronics board support column, there is either a plugged hole or a WayneVac conduit that goes from the hydraulics to the electronic compartment. The wires to the motor will pass through this hole. The sealed nipple is installed here. See Section 12.** ***CAUTION: ALL POWER TO DISPENSER UNDER MODIFICATION SHOULD BE COMPLETELY DISCONNECTED AND CAPPED OFF AT THE JUNCTION BOX TO AVOID UNINTENTIONAL FEEDBACK FROM OTHER DISPENSERS!!***

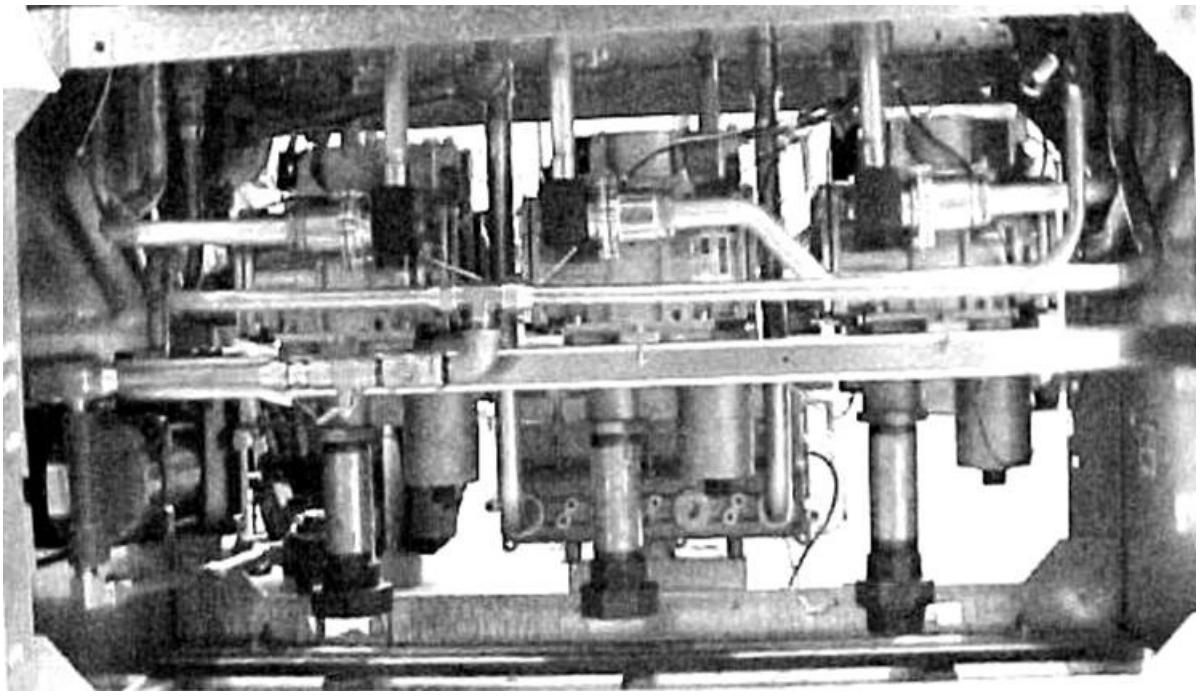

**PHOTO G**

**NOTICE: Ovation dispensers may either be fitted with WayneVAC™ or Balance vapor recovery equipment. This equipment must be removed before the Healy VP1000 System is installed. See section 8 below for removal of a WayneVAC™ system. If Balance equipped, go to section 9 titled "Balance Removal".**

**8. WayneVAC™ Removal:**

- **Disconnect and lockout the power to the dispenser.**
- **Open the dispenser cabinet doors and observe vapor plumbing.**
- **Close the vapor recovery (Stage II vapor return line) impact valve. If there is no impact valve, be sure to have proper plugs or caps available to plug the Stage II line before disconnecting the WayneVAC™ equipment.**
- **On the 'B' side (side opposite IGEM board #173976, see photo H), of the dispenser locate the WayneVAC™ electronics control board #887227 photo I, and disconnect cables going to the WayneVac™ motors (4 connectors, 2 signal and 2 thermister). Also, remove 2 green ground wires going to the chassis.**

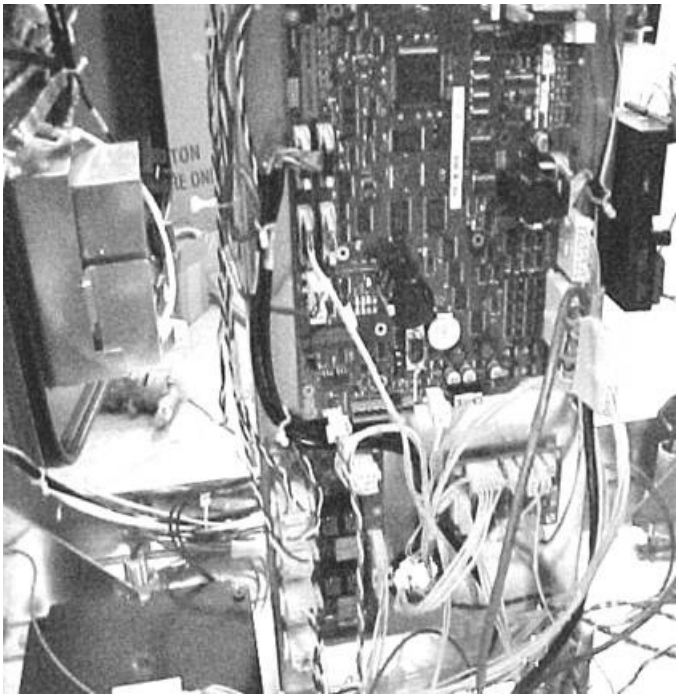

**PHOTO H**

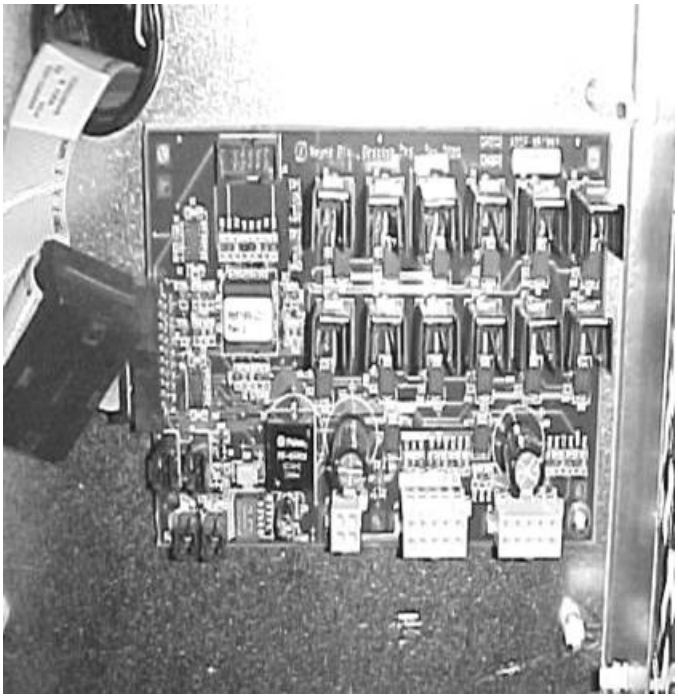

**PHOTO I**

- **On each motor, open the electrical union attached to the electronic housing, remove the covers, disconnect the cables, and ground wire inside.**
- **On each motor, follow the electronic wire conduit to where it penetrates the vapor barrier on the floor of the electronics compartment.**
- **On that conduit, back the lock nut off as far as it will go and then the coupling above the nut until the thread of the mating part, which is potted and comes from the electronic compartment through the barrier, is disengaged, see photo J.**

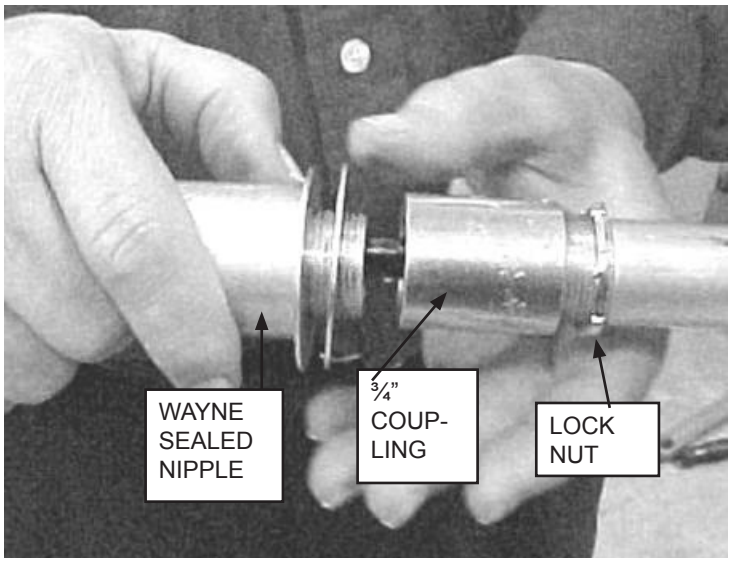


**PHOTO J**

- **In the electronics compartment, remove the potted assembly (with wires) from the tubing and discard all.**
- **The hole on the "A" side in the vapor barrier where the potted assembly was removed needs to be plugged. Get the washer seal assembly from the parts kit and install in this hole. (The small washer fits between the two large washers and is the same thickness as the sheet metal). The hole on the "B" side will be used when installing the Healy System.**
- **Remove the vapor tubes from the flare fittings attached to the 3/4" couplings under the barrier and the inlet of each pump, see photos K & L.**
- **Remove the 3/4" NPT fitting from both 3/4" couplings. CAUTION: Use a pipe wrench on the 3/4" couplings when removing the 3/4" NPT fittings to prevent loosening of the upper vapor piping.**
- **Loosen and slide back the nuts on the vapor tubes connected to the outlet side of both WayneVAC™ pumps and the vapor cross that's mounted to the base of the dispenser. NOTE: The vapor tubes will stay in the fittings until the VAC pumps are removed.**
- **Remove the sheet metal screws on each side that secure the VAC pump mounting bracket to the frame and remove pump/bracket assembly from dispenser and vapor tubing. On one end, it will be necessary to remove the product filter in order to get the pump/bracket assembly out. Be sure you have petroleum 'diapers' available to absorb any spilled fuel. NOTE: Reinstall product filter after VAC pump removal.**
- **Remove the 3/4" flare fittings from each side of the vapor cross.**

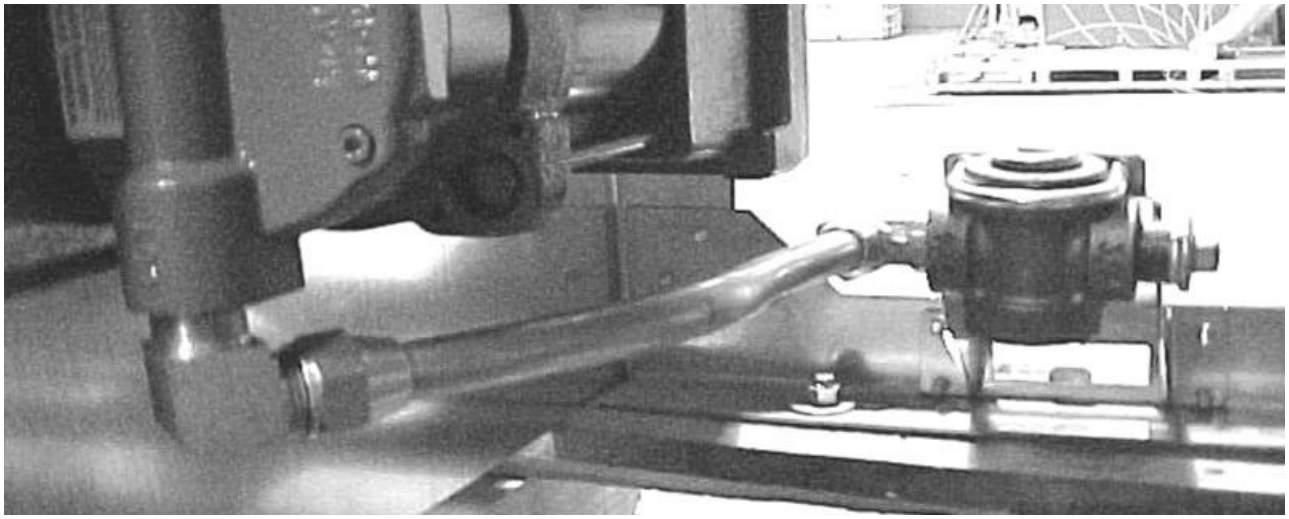

**Photo K**

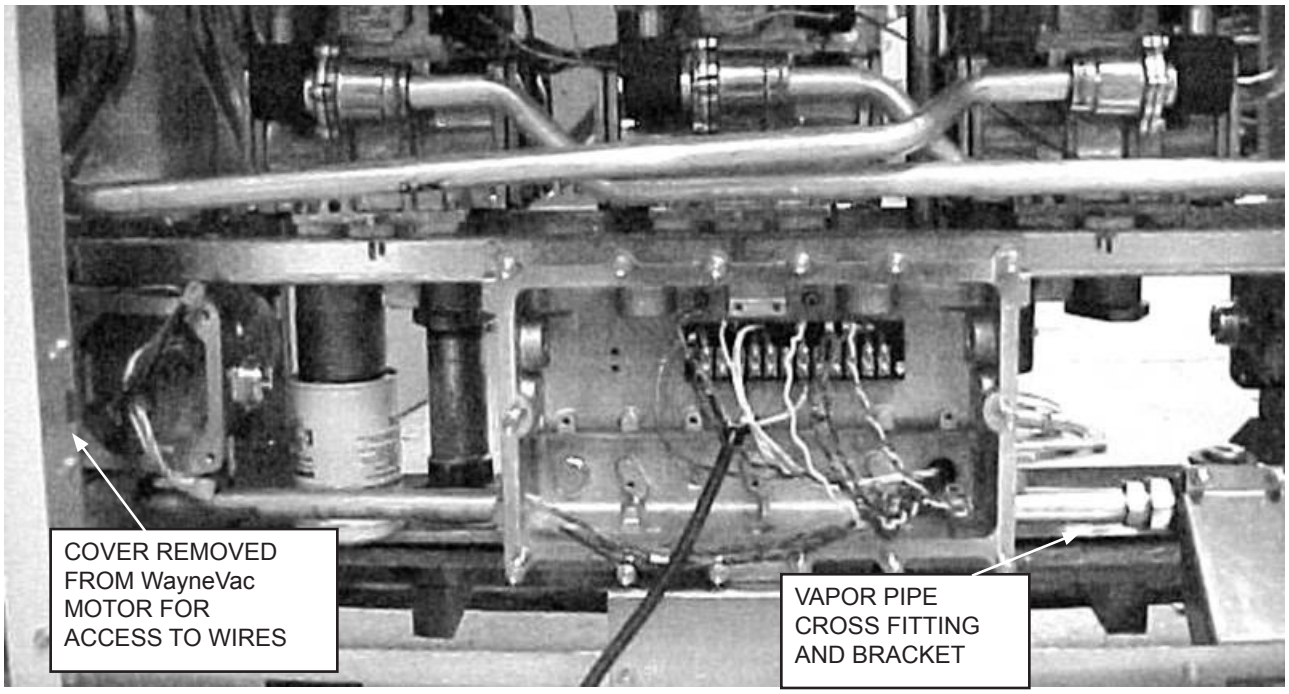


**Photo L**

**9. Balance Removal:**

- **Remove the vapor tubes from the flare fittings attached to the 3/4" couplings under the barrier and from the vapor cross.**
- **Remove the flare fitting from both 3/4" couplings of above. CAUTION: Use a pipe wrench on the 3/4" couplings when removing the flare fittings to prevent loosening of the upper vapor piping.**
- **Remove the flare fittings from each side of the vapor cross.**

**10. INSTALLING THE VP1000 SYSTEM:**

**NOTE: that the mounting bracket on the VP1000 must be rotated 90° to secure the pump on this shelf. When installed in the dispenser, the vacuum pump INLET must be on top and the OUTLET on the bottom**

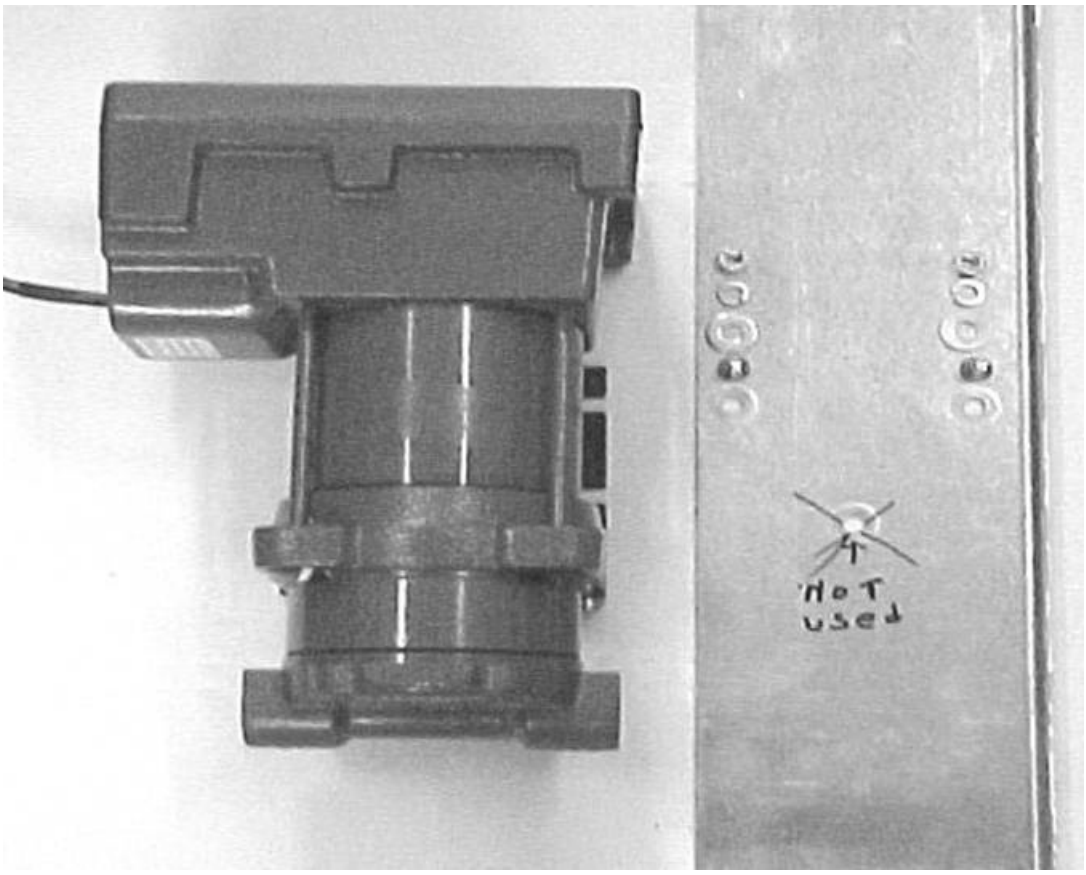


**PHOTO M**

- **Place the VP1000 vapor pump on the sheet metal bracket with the pump end towards the left, upturned flange, see photo M. Secure with one 1/4-20 x 5/8" flat head cap screw, washer and nut in each of the motor mounting holes closest to the electrical end.**

**NOTE: DO NOT USE PIPE SEALING COMPOUND ON ANY ELECTRICAL CONDUIT FITTINGS.**

**Mount the electrical conduit on the VP1000: (See Photo N Below)**

- **Get the 1/2" x 3" conduit nipple and thread through the motor wires to secure the nipple into the motor.**
- **Install the 1/2" electrical elbow to the nipple from above – use care not to twist the wires during the installation. Completely tighten the elbow to face toward the rear of the VP1000, see photo N.**
- **Next, install, in the elbow, the 1/2" close nipple, followed by the female half of the electrical union.**
- **Lastly, use Teflon tape to install a 1/2" NPT x 5/8" flare elbow in the 'IN' port of the pump. Face the elbow to the right when looking at the front of the pump, see photo N.**

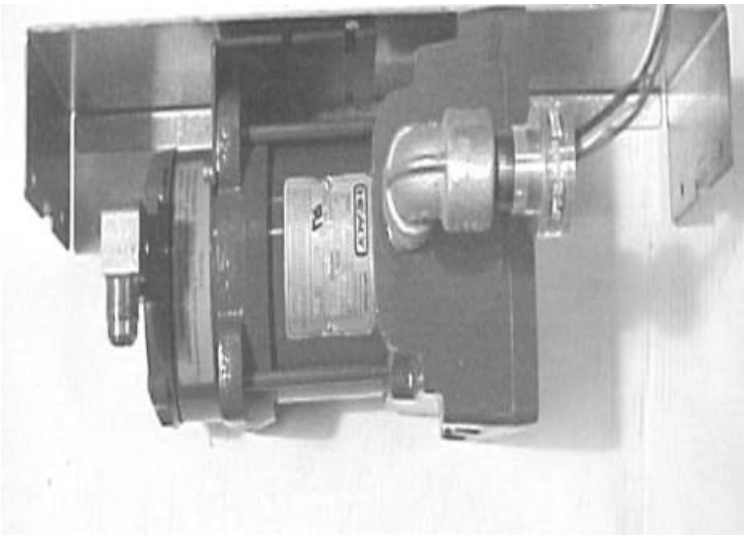

**PHOTO N**

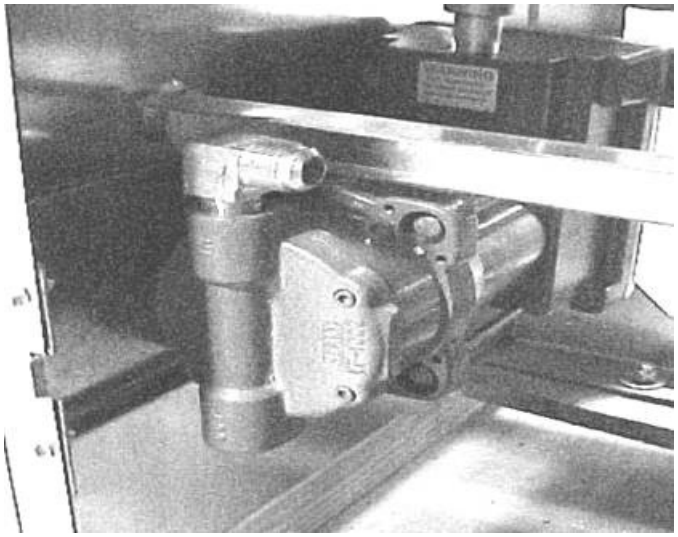

**PHOTO O**

**Mount the VP1000 and the vapor plumbing:**

- **Mount the pump/bracket assembly in the dispenser from the "B" side, (this is the side opposite the IGEM board #173976) using four 1/4" x 1/2 sheet metal screws, see photo O, View From "B" Side.**
- **On the 'B' side of the dispenser, in the hydraulics area, locate the 3/4" vapor coupling on the right hand side under the vapor barrier. Install a 3/4" NPT x 5/8" flare elbow into the 3/4" coupling, completely tighten to face directly toward the cover panel opening.**
- **Still on the 'B' side, locate the left end 3/4" vapor coupling protruding from the vapor barrier. Install a 3/4" NPT x 5/8" flare straight fitting into the threaded hole.**
- **Get the preformed 5/8" tube labeled left and attach the short leg to the left fitting just installed. Do not completely tighten at this time.**
- **Get the preformed tubing labeled right and install in the right end elbow fitting. Do not completely tighten at this time.**

**11. CONNECTING VAPOR LINES: (ref. Photos P, Q & R)**

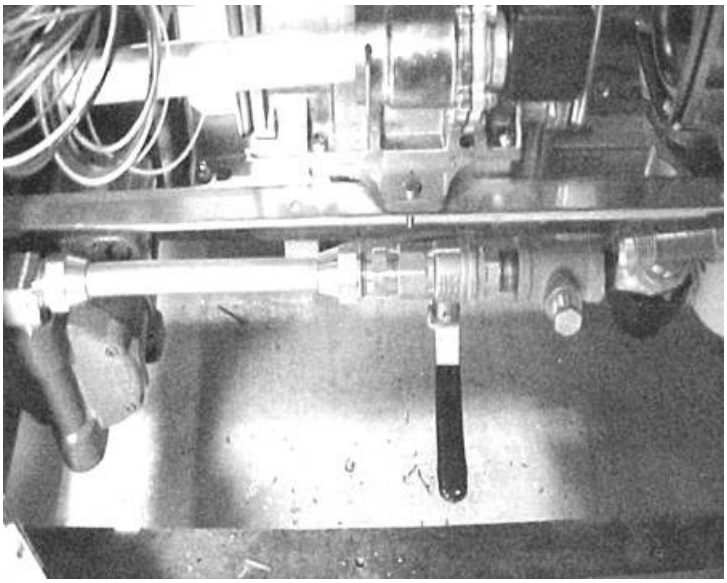

**PHOTO P**

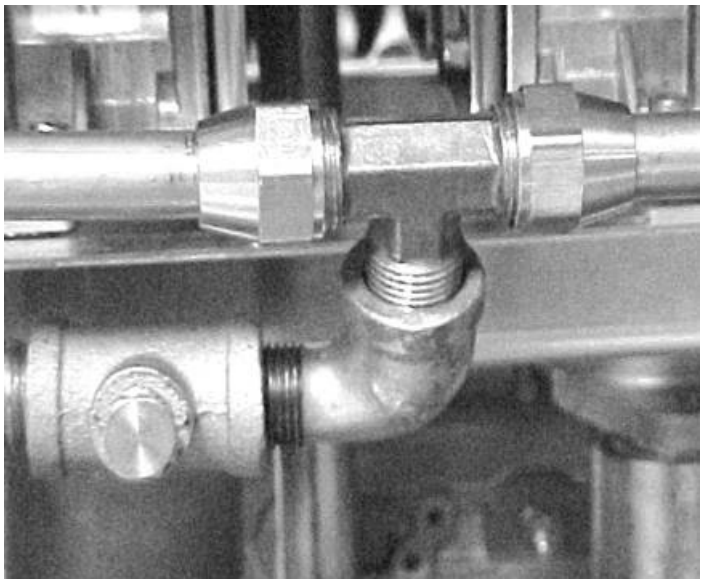

**PHOTO Q**

- **Make the pipe thread connections below using pipe thread compound as required.**
- **Get the 1/2" NPT x 5/8" x 5/8" flare tee and insert between the two preformed 5/8" copper tubes to be sure the tubes can be securely tightened, but DO NOT COMPLETELY TIGHTEN.**

- **Remove the tee and thread into the 1/2” street elbow, tighten to position shown in photo Q. To the elbow, add the 1/2” reducing tee and orient tee so the 1/4” branch opening is 75° to the elbow (facing the installer) with the elbow on the right and facing up. Install the 1/4” plug into the 1/4” opening on the tee.**
- **Install the 1/2” close nipple into the tee and follow with the 1/2” ball valve. Orient the ball valve so the lever is on the bottom when the 1/4” plug is facing sideways, see photo P.**
- **Install the 1/2” x 5/8” straight flare fitting into the ball valve.**
- **Reinstall the 5/8” flare tee back between the two preformed pipes, with the flare fitting facing the VP1000 and final tighten the flare nuts. The ball valve lever should be on the bottom and the 1/4” pipe plug horizontal facing you. Be sure the slope of the two pipes is downward and slopes to the tee.**
- **Measure and cut a length of 5/8” OD copper tube necessary to run from the pump inlet flare fitting to the flare fitting on the ball valve. Cut the copper tubing and slide on the flare nuts before flaring the ends. Carefully position this vapor tube to align fittings for tightening. Secure tubing connections to the pump and ball valve. Use care not to kink the tubing and maintain the slope downwards.**
- **On the “A” side of the dispenser, install the 3/4” pipe plug to the left end of the vapor cross and the 3/4” NPT x 5/8” flare elbow in the right end. Completely tighten the flare elbow so it is horizontal to slightly upward facing the out port of the VP1000.**
- **On the ‘B’ side, install the 1/2” NPT x 5/8” flare elbow into the out port of the VP1000. Completely tighten until horizontal to downward facing the flare elbow on the vapor tee. (Use tape, not pipe dope)**
- **Measure and cut appropriate length of 5/8” copper tubing to reach from the flare fitting on the vapor cross to the fitting in the VP1000 out port. Use 5/8” tubing bender to fit pipe appropriately to fittings if necessary see photo K.**
- **Slide on the flare nuts before flaring the ends.**
- **Carefully position this vapor tube to align fittings for tightening. Secure tubing connections to the pump and vapor cross. Use care not to kink the tubing and maintain the slope downwards.**

**12. INSTALLING THE SEALED NIPPLE ASSEMBLY: (See Photos R & S)**

**NOTICE: THE INTERFACE MODULE THAT IS SUPPLIED HAS A HARNESS ATTACHED AND A WIRING PLUG FOR THE AC CONNECTIONS. ALSO SUPPLIED IS THE SEALED NIPPLE ASSEMBLY (1346) THAT MUST BE INSTALLED BETWEEN THE ELECTRONICS AND HYDRAULIC AREAS OF THE DISPENSER CABINET.**

- **Looking in the “B” side of the electronics cabinet, notice on the lower left of the electronics board support column, there is either a plugged hole (remove plug at this time),or an open hole where the WayneVac™ conduit was removed from the hydraulics to the electronic compartment. Get the 1346 Sealed Nipple assembly and remove the first nut and washer. Turn the remaining nut down on the nipple as far as it will go.**

- **Carefully slide the threaded nipple end wires down from the electronics cabinet to the hydraulics area see photo S.**
- **Slide the washer and nut removed above, back over the wires and thread on to the nipple, approximately 4 turns, do not tighten until electrical is complete see photo S.**
- **Install a 3/4" electrical elbow onto the sealed nipple. Tighten to face the female half of the electrical union that's attached to the VP1000.**
- **Install a 3/4" x 1/2" electrical reducing bushing to the 3/4" elbow followed by a 1/2" x 7" electrical nipple, then a 1/2" electrical coupling followed by a 1/2" x 5" electrical nipple.**
- **Get the "J" box and install a 3/4" x 1/2" reducing bushing in each 3/4" threaded hub.**
- **Position the "J" box as shown in photo R, pull wires through and install onto the 1/2" x 5" electrical nipple being careful not to twist the wires.**
- **Install a 1/2" electrical close nipple to the bottom port of the "J" box.**
- **Get the 1/2" pull elbow and remove the cover. Install onto the 1/2" close nipple and tighten to the position shown in photo R.**
- **Attach the male half of the electrical union to the pull elbow. Pull wires from the female half of the union through the male half, through the pull elbow and into the "J" box.**
- **Tighten the union half's together being careful not to pinch wires and install cap on elbow.**
- **Tighten the nuts on the sealed nipple to secure to barrier panel.**

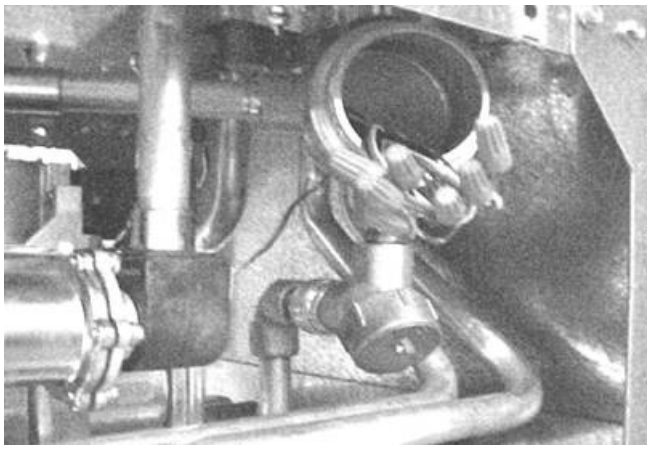

**PHOTO R**

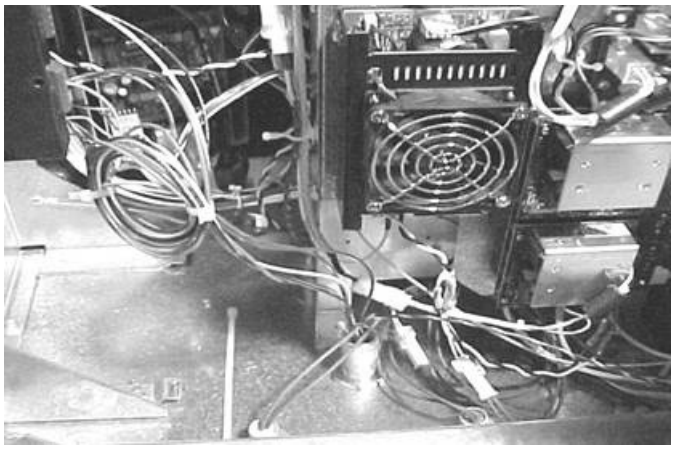

**PHOTO S**

- **Leaving about 6" of wire on both the wires coming from the motor and from the sealed nipple, cut off excess wire and strip approximately 1/2" of insulation from all wires.**
- **Use wire nuts to join the wires, color for color, together. There may be some extra wires in some sealed nipples, cap these off and dress aside.**
- **Keep wires clear of pinch points and from interference, make sure no wires overhang the box openings and replace the cover on the junction box.**

## 13. WIRING INSIDE THE ELECTRONICS COMPARTMENT

- **Cut the wires coming from the sealed nipple assembly in the electronics cabinet at least twenty inches long and strip all wires 1/2".**
- **Connect the wires from the sealed nipple to the interface module as follows:**
  - **Black wire to 'motor ' on module**
  - **White wire to 'neutral' on module**
  - **Red wire (either) to 'output 1' on module**
  - **Red wire (other) to 'output 2' on module**
  - **Orange wire to 'fault common' on module**
  - **Purple wire to 'fault input' on module**
  - **Green wire needs a #8 ring tong lug installed and connected to any chassis ground (frame)**
  - **Some sealed nipples may have some extra wires, cap these and bundle them neatly out of the way.**
- **The black and white twisted pair of wires with a connector should be connected to an available AC outlet on the dispenser Relay Board #887225 see photo T.**
- **The male/female multiconductor cable that is wired to the interface module is routed up to the computer board, J3. Disconnect the valves cable already in J3 and install in the female side of the double connector on the harness. The entire assembly is then installed back into J3 on the Computer board #173976 see photo T.**
- **Carefully position the wired module on the edge of the center upright sheet metal panel "B" side, select a blank hole, and slide over the 8-32 Tinnerman nut supplied in the electronics kit. Mount the module to the Tinnerman clip using the 8-32 x 5/8" screw and washer supplied.**

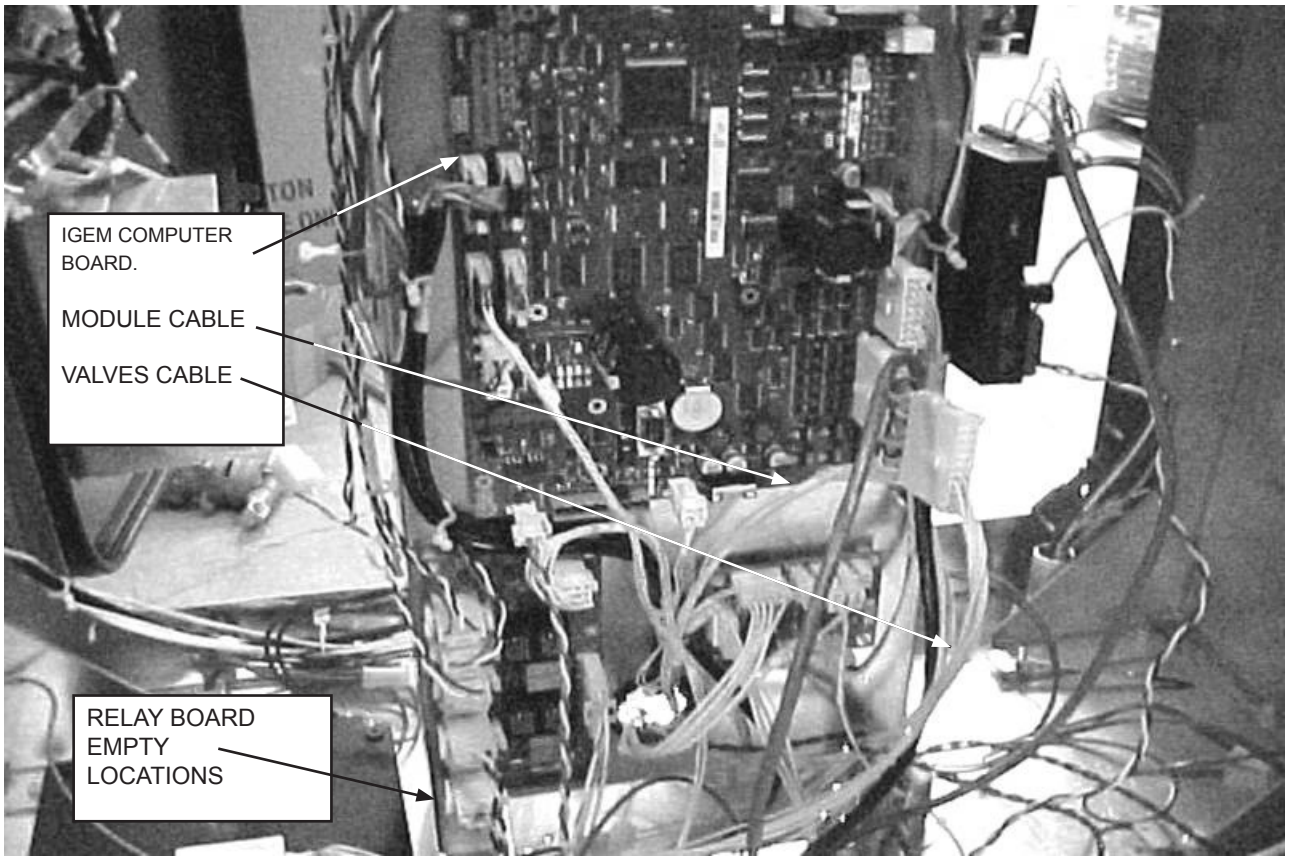


**PHOTO T**

- **Install the following labels supplied:**
  - **NOTICE label for current increase (1405), install on the frame rail near the existing power consumption label.**
  - **Large NOTICE label (1406) relating to the vapor recovery upgrade and how to reset the electronic module should be installed near the module, where it will be readily visible to a service technician on the junction box cover.**
  - **UL, retrofit kit identification number (1410), install on the electronic module.**

## 14. Connecting Healy Systems Dispensing Equipment

- **Completing the connection of Healy Systems dispensing equipment requires the installation of Healy Systems Phase II dispenser adaptors, hoses and nozzles (Hanging Hardware).**
- **If applicable, remove existing non-Healy hanging hardware (from the dispenser product outlet adaptor to and including the nozzles).**
- **Vapor ready dispensers may require a Healy Systems adaptor to make the hose threads compatible with other Healy Systems equipment. Install necessary adaptor following instructions packed with the adaptor. Various adaptors and pigtails are available, depending on how the dispenser is configured: M34 metric (Healy designation F3 or S3) or balance ready (Healy designation S4).**
- **Healy Vapor Recovery Hoses are available in various lengths to satisfy local ordinances and still provide "far side" fueling capability. Install these following instructions contained on the shipping box.**
- **Breakaways are required: Install either Model 8701VV breakaway or Model 807 swivel breakaway; install using the instructions supplied with the unit.**
- **The Healy Systems nozzle Model 900 (EVR) is the only nozzle necessary to complete the upgrade. Check to be sure the nozzle hanger is mounted in the highest position. Be sure to check for proper fit in the nozzle holster and that the nozzle can be locked in the off position. Also, be sure that when the nozzle is locked, that the dispenser can not be activated from the locked position.**

## 15. VP1000 Theory of Operation

**The Healy Systems VP1000 is a self-contained rotary vane pump, designed for gasoline vapor recovery utilizing various parts of the Healy System Vapor Recovery product line. It is intended for use by either OEM dispenser/pump manufacturers or as an after market add-on to make existing equipment compatible with Healy System technology. In order to convert to 'others' equipment, an electronic interface is required to adapt the targeted pump/dispenser to the new vapor recovery equipment. The interface senses when authorization to dispense has been given and sends signals to the motor to operate at a low speed for one hose, or a higher speed for two hoses. It also functions to shut off the pump/dispenser if it senses that the vapor pump is not operating properly. The vacuum is regulated at a level sufficient to clear liquid gasoline from the vapor path in MPD applications. The actual amount of vapors withdrawn is controlled by the Healy nozzle, itself, in response to the liquid gasoline flow rate.**

### MOTOR SPECIFICATIONS

| | |
|---|---|
| Horsepower | 1/8 |
| Voltage | 120VAC |

### INTERFACE SPECIFICATIONS

| | |
|---|---|
| Input voltage | 120 VAC |
| Relay current capacity | 5A AC |
| Input signals | 120 VAC |
| Motor Input signal | 5 VDC @ 20 Hz 50% Duty Cycle |

## 16. TESTING THE SYSTEM:

- **Carefully review all work completed, being sure all mechanical joints are thoroughly tightened and electrical connections sealed.**
- **Open the product crash valves and restore power to the dispenser.**
- **With the power on, but no nozzles authorized, the VP1000 should not be running (unless the ambient temperature is below 40°F), but the power LED (yellow) should be energized on the interface module.**
- **Authorize one handle and the vacuum system should activate when the gasoline flow control valve is engaged. Repeat for all other nozzles, individually testing each nozzle on each side of dispenser. With each authorization, one of the green LED's on the interface module should illuminate and the VP1000 activate.**
- **Note: For unihose dispensers, conduct individual tests for each product grade on each side of the dispener to ensure that the same LED activates for all grades on the same side. If the other LED activates, wiring needs to be corrected.**
- **Authorize one nozzle and listen to the speed of the VP1000. With only one nozzle activated, the speed will be slower than if a nozzle on <u>each side</u> is activated. Activate a nozzle on the other side of the dispenser and listen for the speed to change.**
- **To test the tightness of the vapor plumbing installed on the suction side of the system requires a 0-100" water column gauge. Connect the gauge into the 1/4" test port of the reducing tee installed earlier in section 11 Photo P. Continue by following and completing the START-UP / NEW INSTALLATION / WARRANTY / ANNUAL TESTING FORM.**

## 17. TROUBLESHOOTING VP1000

- **Use extreme care and caution when performing the tests listed below. If 120 VAC is accidentally applied to the fault or DC terminals, the module will be destroyed.**
- **With power applied to the dispenser, but no products authorized, there should be 120 VAC between neutral and power in on the module terminal strip.**
- **As above, with any product authorized, there should be single speed power applied to the VP1000. Verify this by checking for 2-3 VDC from OUTPUT 1 (RED WIRE) to FAULT COMMON (ORANGE WIRE), (or from OUTPUT 2 TO FAULT COMMON) also; one GREEN LED should be illuminated. With a second product authorized on the opposite side of the dispenser *i.e.* one product on each side, the motor should operate at higher speed and there should be 2-3 VDC on both output 1 and 2 (to fault common) and both GREEN LED's should be illuminated.**
- **With the pump running, a fault can be simulated by shorting, with a jumper wire, the "FAULT INPUT" (purple wire) to FAULT COMMON (orange). This should cause the motor to shut off, the solenoid valves to lose power and the dispenser to shut down. Also, as long as the short is maintained, the red LED will be illuminated. Removing the short will not automatically reset the module. To reset the module, remove the short, remove power to the dispenser for twenty seconds and restore power. The module should now be reset and the red led extinguished. This can also be accomplished by using the power reset (PWR RESET) on the module.**
- **If diagnosing a problem where the LED is already illuminated, a steady light indicates a low current condition, therefore expect a vane or rotor problem. If the LED is blinking, that indicates a high current condition and would expect to find a jammed rotor or vapor line flooded with product. See Start-up / New Installation / Warranty / Annual Testing Form.**
- **The electronics of the motor will make three attempts to have a successful start of the motor. If it detects a problem, on the fourth unsuccessful start, it will short the fault line to signal minus (DC-) and shut down the electronics.**

**MC100 Interface Module**

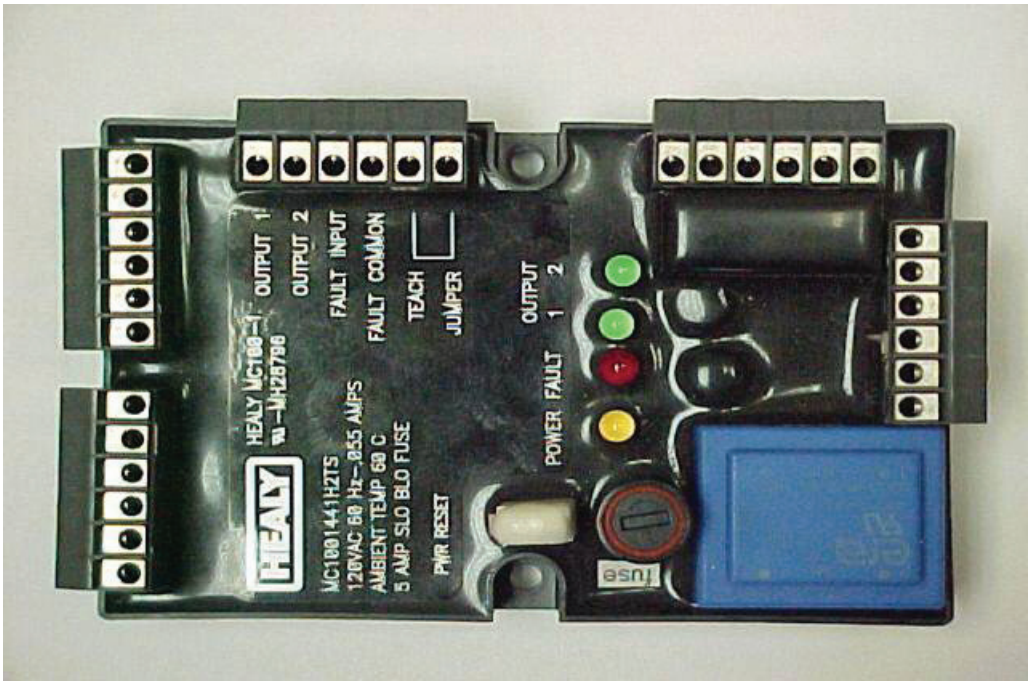

## 18. VP1000 Vane & Rotor Service & Replacement Guide

**Caution** **Disconnect power before beginning service.**

1. The work area **must** be clean and have sufficient lighting.
2. Disconnect the vapor piping connected to the **IN** and **OUT** ports of the VP1000 cover assembly.
3. Remove the four Allen head screws and lock washers that secure the pump cover assembly to the pump housing and remove the cover carefully.

**Caution** **Use a spill cloth when removing the cover, as there may be some gasoline inside the pump cavity**.

4. Carefully turn the rotor assembly by hand until the shaft key notch is at the 12 o'clock position. (See Figure 1)
5. Remove the rotor, vanes and shaft key from the pump housing.

**Note:** Place your hand or a container under the rotor while removing. Do not use any sharp objects that would scratch the surfaces of the pump cavity, pump shaft, rotor, or vanes.

6. Rotate the shaft by hand. If the shaft does not rotate freely, the entire vacuum pump needs replacement (p/n VP1000-5).
7. If the rotor and vanes are cracked, chipped, excessively worn or excessively dirty, the rotor and vanes should be replaced because cleaning will not remedy these conditions (p/n VP1000VRC or VP1000VRC-P).
8. If there is no visible damage, use a lint-free cloth with isopropyl alcohol to clean the rotor and vanes.
9. Using a lint-free cloth with isopropyl alcohol, thoroughly clean: the inside of the pump ring and rear of the pump cavity, the rotor shaft, and the inside of the pump cover.
10. Reposition the shaft (if necessary) so that the shaft key notch is in the 12 o'clock position. Install the cleaned original or new shaft key onto the shaft.
11. Carefully install the cleaned original or new rotor onto the shaft followed by the cleaned original or new vanes into the rotor.

**Note:** The rotor assembly should slide on to the shaft easily, without excessive force. (Rotors and vanes are reversible)

12. Lightly lubricate and install the new O-Ring for the pump housing.

**Note:** Do not allow any lubricant to get inside the pump housing.

13. Install the pump cover using the four Allen head screws and lock washers removed in step 3 and cross tighten.

**Note:** Use caution when sliding the pump cover over the O-Ring seal to prevent cutting or tearing.

14. Re-connect the vapor piping to the **IN** and **OUT** ports of the pump cover assembly that was removed in Step 2.
15. Re-apply power. Test for normal operation. (See VP1000 Vacuum Performance Test Procedure)

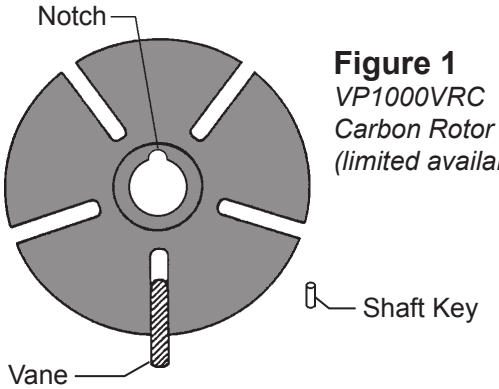


**Figure 1**
*VP1000VRC Carbon Rotor (limited availability)*

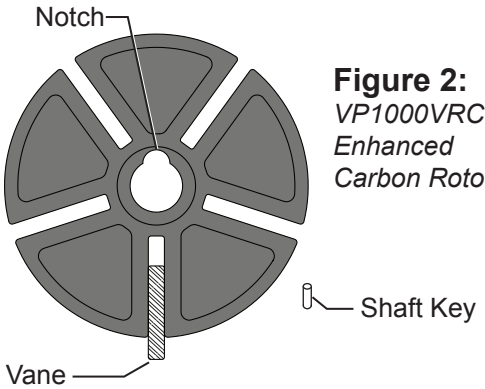


**Figure 2:**
*VP1000VRC-P Enhanced Carbon Rotor*

START-UP/NEW INSTALLATION/ WARRANTY/ ANNUAL TESTING FORM (Rev. 10/07)
HEALY VP1000 VACUUM PUMP

Date_____

**BOTH SIDES OF THIS TEST FORM MUST BE COMPLETED FOR NEW INSTALLATIONS**

- **Start-up / New installations – complete SIDE A and sections 3, 4, 5 and 6 of SIDE B. Submit forms to Healy Systems.**
- **Warranty Service or Annual Testing – complete contact information, dispenser make, vacuum pump serial # and the tests in sections 1 and 2 on SIDE A and conduct the appropriate tests specified on SIDE B. Submit Forms to Healy Systems.**

| | | |
|---|---|---|
| SERVICE COMPANY NAME | TELEPHONE | |
| SERVICE TECHNICIAN | HEALY TECH CERT # | |
| STATION ADDRESS | CITY | STATE |
| **DISPENSER MAKE** | **VACUUM PUMP SERIAL #** | |

# SIDE A

| **DISPENSER EQUIPMENT CHECKLIST - Parts A-1 and A-2** | | **YES** | **NO*** |
|---|---|---|---|
| **A-1** | Is all the installed dispenser hanging hardware listed in Exhibit 1 of Executive Order VR-201 or VR-202? | | |
| **A-2** | Proper installation of the VP1000 requires the test port and ball valve on the inlet side of the vacuum pump. Are the test port and ball valve installed correctly? | | |
| | ***If the answer to either A-1 or A-2 is NO, the Healy Warranty is Void.** | | |

## A-3

- THE FOLLOWING TEST WILL PERFORM A POSITIVE PRESSURE LEAK CHECK OF THE VACUUM PUMP, DISPENSER VAPOR PIPING, HANGING HARDWARE AND ALL NOZZLES ON BOTH SIDES OF THE DISPENSER.
- THE VP1000 OUTLET IS NOT CONNECTED TO UNDERGROUND PIPING DURING THIS TEST.

**CAUTION: REGULATE GASEOUS NITROGEN TO 2.5 PSI (~70" WC) MAXIMUM BEFORE TESTING**

1. Install a 0-100 inch water column (" wc) mechanical gauge at the VP1000 test port.
2. Use the water column gage positive (high) pressure port.
3. Gaseous nitrogen gas can now be connected to the outlet (exhaust) port of the VP1000.
4. Test pressure **cannot** exceed 70" wc.
5. **Slowly** introduce the gaseous nitrogen to a pressure between 60 – 70" wc.
6. After reaching the pressure range, close the valve supplying the gaseous nitrogen.
7. Record the initial pressure reading on the gauge - observe and record the final pressure reading after 60 seconds.
8. Leaks must be repaired when the pressure falls more than 4" wc in 60 seconds.
9. Retest until all leaks have been repaired.
10. Record test results in Section A-4.

| **A-4**<br>**PRESSURE TEST**<br>**2.5 PSI (~70"wc) Maximum** | **Initial Pressure test reading ("wc)** | **Pressure test reading after 60 seconds ("wc)** |
|---|---|---|

START-UP/NEW INSTALLATION/ WARRANTY/ ANNUAL TESTING FORM (Rev. 10/07)
HEALY VP1000 VACUUM PUMP

Date_____

**BOTH SIDES OF THIS TEST FORM MUST BE COMPLETED FOR NEW INSTALLATIONS**

- **Start-up / New installations – complete SIDE A and sections 3, 4, 5 and 6 of SIDE B. Submit forms to Healy Systems.**
- **Warranty Service or Annual Testing – complete contact information, dispenser make, vacuum pump serial # and the tests in sections 1 and 2 on SIDE A and conduct the appropriate tests specified on SIDE B. Submit Forms to Healy Systems.**

# SIDE B

| *Warranty Service*<br>Complete Troubleshooting Sections<br>**B-1 and B-2** | *Start-up/ New Installations/ Annual Testing*<br>Complete Sections<br>**B-3 through B-6** |
|---|---|

## B-1

**Control Module Fault Light**

**(Circle one) Flashing (LED) Steady (LED)**

1. All fault conditions require removal and cleaning or replacement of the rotor and vanes located inside the vacuum pumps round front cover assembly. Use the **VP1000 ROTOR & VANE SERVICE AND REPLACEMENT GUIDE** in the applicable dispenser retrofit manual of the ARB Approved Installation, Operation and Maintenance Manual for Executive Orders VR-201-K and VR-202-K.
2. Clean all surfaces including vanes, rotor, rotor housing and cover assembly.
3. Manually spin and inspect the motor shaft for bearing wear before re-installing the rotor kit.
4. Replace motor when bearings or shaft are damaged or worn.
5. Check O-ring seal before replacing rotor cover assembly.

## B-2

Re-Assemble / Reset Vacuum Pump and Module. (Power must be removed from both the vacuum pump and the **module for 20 seconds to reset the system**) using the power reset switch on the MC100 module.

## B-3

Dispenser Vapor Line Integrity Test

1. Install 0-100 inch water column (“ wc) vacuum mechanical gauge at the VP1000 test port.
2. Authorize the dispenser for fueling. The VP1000 will begin to run.
3. Close the ball valve at the pump inlet.
4. Record the initial vacuum reading on the gauge – observe and record the final vacuum reading after 60 seconds.
5. Open the ball valve at the pump inlet.
6. Leaks must be repaired when the vacuum reading falls more than 4” wc in 60 seconds.
7. Retest until all leaks have been repaired.
8. Record data in Section B-4.

**Note: If the initial vacuum reading is less than 60” wc, it could indicate a problem with the VP1000. Remove the dispenser from service. Use the troubleshooting section of the manual to investigate problem or contact the FFS Technical Help Desk at 800-984-6266 for assistance.**

## B-4

| VACUUM TEST Using VP1000 as vacuum source | Initial Vacuum test reading (“ wc) | Vacuum test reading after 60 sec. (“ wc) |
|---|---|---|
| | | |

## B-5

Dispenser Vaacuum Test

With one side of the dispenser authorized (VP1000 running) and the ball valve at the pump inlet open, dispense in handheld position a minimum of 0.5 gallons of fuel into a vehicle or test tank. Record the vacuum level while dispensing. Repeat test for the other side of the dispenser.

1. Side “A” Dispensing Vacuum _____” wc
2. Side “B” Dispensing Vacuum _____” wc

**Note: If the dispensing vacuum is less than 60” wc, remove the dispenser from service. See the troubleshooting section of the manual or contact FFS Technical Help Desk at 800-984-6266 for assistance.**

## B-6

Audible Increase Test

Test the VP1000 Vacuum Pump for normal operation. Use the 6 step procedure titled, “Testing the VP1000 Vacuum Pump for normal operation using the following test procedure:” in Section 1.1 (Weekly Inspection and Testing) of the Healy Systems Scheduled Maintenance document in the ARB Approved Installation, Operation and Maintenance Manual for the Healy Phase II EVR System not Including ISD. This is to verify that the pump recognizes when both sides of the dispenser are activated for fueling.

Does the VP1000 Vacuum Pump change speeds (audible increase) when both sides are activated for fueling?

Yes No

If the answer is no, **use the troubleshooting section of the manual to investigate problem or contact the FFS Technical Help Desk at 800-984-6266 for assistance.**

| Repairs - Comments | To Obtain Returned Materials Authorization number (RMA#) Call 800-984-6266<br>Forms can be faxed to Franklin Fueling Systems Customer Service at 800-225-9787 |
|---|---|

# WAYNE-DRESSER 1V, 2V, 3V, & 4V™ SERIES DISPENSER

# RETROFIT for HEALY SYSTEMS, INC.

# MODEL VP1000

# VAPOR RECOVERY ASSIST SYSTEM

**(KIT Z084)**

## OUTLINE

**Notice: USE THIS PROCEDURE IF CONVERTING A BALANCE VAPOR RECOVERY SYSTEM TO A HEALY VAPOR RECOVERY ASSIST SYSTEM**

This Manual is to be used for new, replaced, retrofitted, or reconditioned dispensers/pumps.


1. **Purpose**
2. **Safety**
3. **Models Covered**
4. **Parts Lists**
5. **Tools Required**
6. **Dispenser Access**
7. **Survey Scope of Work**
8. **Installing The Healy VP1000 System**
9. **Installing The Sealed Nipple Assembly**
10. **Wiring Inside The Electronics Compartment**
11. **Connecting Healy Systems Dispensing Equipment**
12. **VP1000 Theory Of Operation**
13. **Testing The System**
14. **Trouble Shooting The VP1000**
15. **VP1000 Vane & Rotor Service & Replacement Guide**

**Start-up / New Installation / Warranty / Annual Testing Form**



Franklin Fueling Systems
3760 Marsh Road
Madison, Wisconsin 53718 USA
ARB Approved Installation, Operation and Maintenance Manual

Website: http://www.franklinfueling.com
Email: sales@franklinfueling.com
Telephone: 800-225-9787
Fax: 608-838-6433


HEALY

Franklin Fueling Systems

**1. PURPOSE:**

**This procedure describes the tools, methods and skill levels required to install a Healy Systems, Inc. Model VP1000 Vapor Recovery pump in vapor ready Wayne-Dresser™ 1V, 2V, 3V, & 4V series gasoline dispenser. Only Healy trained and certified contractors will be able to perform these retrofits or warranty will be void. The installer shall be a skilled petroleum technician and thoroughly familiar with the requirements of State, Federal and local codes for installation and repair of gasoline dispensing equipment. Also, they shall be aware of all the necessary safety precautions and site safety requirements to assure a safe and trouble free installation. NOTE: All electrical and hydraulic plumbing fittings referred to in these instructions must be UL "listed" or "recognized" for the purpose.**

**Note:** Installations of vapor piping into the inlet side of the vacuum pump should be sloped such that the natural flow direction is toward the vacuum pump. However, it is permissible to have a piping slope tilted away from the vacuum pump provided that all other applicable tests (Dispenser integrity and V/L) meet the specifications outlined in the appropriate section of the Executive Order and ***ARB Approved Installation, Operation and Maintenance Manual***.

**Note:** For installations with In-Station Diagnostics (ISD), the vapor flow meter shall be installed on the down stream side of the vacuum pump. Every effort shall be made to install the vapor flow meter so that vapor piping between the vacuum pump and the vapor flow meter is sloped such that the natural flow direction is toward the vapor flow meter. However, it is permissible to have the piping slope away from the vapor flow meter provided that all other applicable tests (Dispenser integrity, V/L and ISD Operability) meet the specifications outlined in the appropriate section of the Executive Order and ***ARB Approved Installation, Operation and Maintenance Manual***.

**2. SAFETY: Before installing the equipment, read, understand and follow:**

- **The National Electrical Code (NFPA 70)**
- **The Automotive and Marine Service Code (NFPA 30A)**
- **Any national, state and local codes that may apply.**

**The failure to install the equipment in accordance with NFPA 30A and 70 may adversely affect the safe use and operation of the system.**

**Accurate, sound installations reduce service calls: Use experienced, licensed contractors that practice accurate, safe installation techniques. Careful installation provides a sound troubleshooting framework for field repairs and can eliminate potential problems.**

1. **Read all instructions before beginning.**
2. **Follow all safety precautions:**
   - **Barricade the area.**
   - **Do not allow vehicles or unauthorized people in the area.**
   - **Do not smoke or allow open flames in the area.**
   - **Do not use power tools in the work area.**
   - **Wear eye protection during installation.**
3. **Use circuit breakers for multiple disconnects to turn off power and prevent feedback from other dispensers.**

**3. MODELS COVERED:**

**Wayne 1V, 2V, 3V, & 4V™ series of blending and non-blending dispensers. The addition of the Healy Systems VP1000 to these dispensers will increase the current draw of the dispenser by 2 amps. Use the label supplied to note this change.**

**4. PARTS LISTS: (See Photo A)**

**1 VP1000 Vacuum Pump**

**1 1365A Wire Harness / MC100 Series Interface Module Assembly (for 3V) or**

**1 1363A Wire Harness / MC100 Series Interface Module Assembly (for 1V & 2V)**

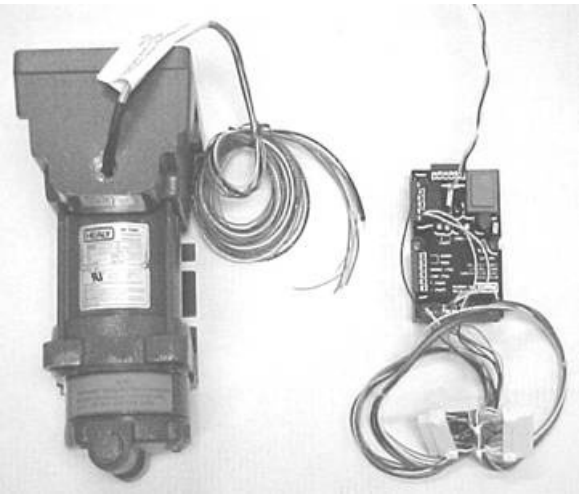

**PHOTO A**

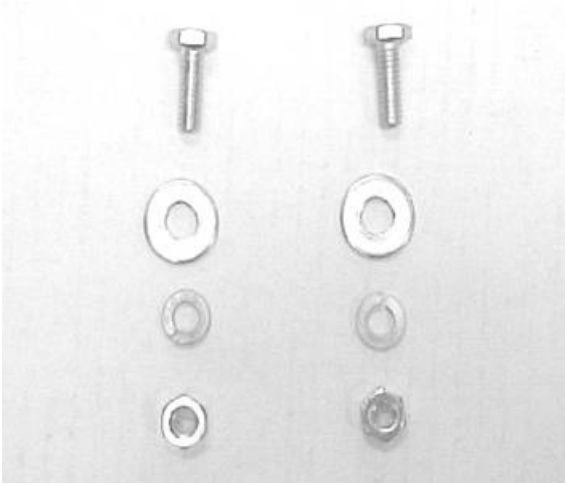

**PHOTO B**

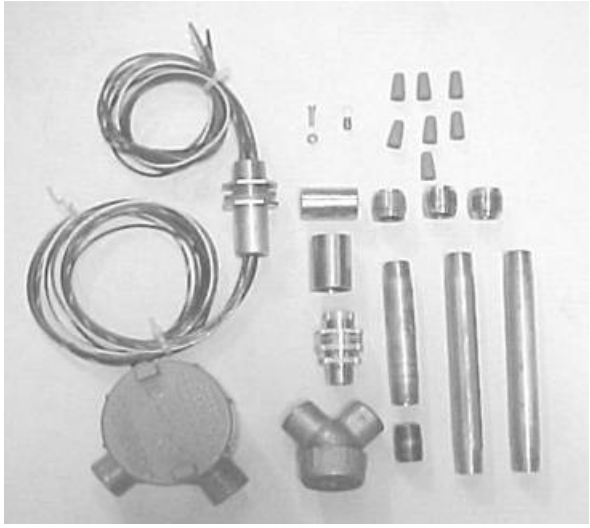

**PHOTO C**

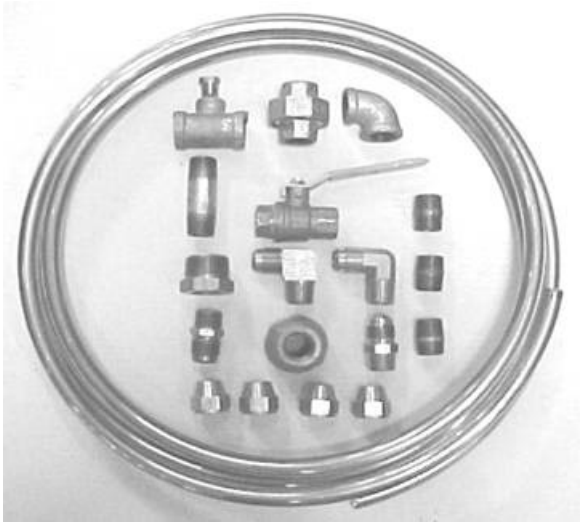

**PHOTO D**

**HARDWARE KIT Z084H: (See Photo B)**

**1 1/4-20 bolts, washers, lock washers and nuts.**

**ELECTRICAL KIT Z084E: (See Photo C)**

| | | | |
|---|---|---|---|
| 7 | Wire nuts | 1 | 8-32 x 3/4” machine screw w/ nut |
| 1 | 3/4” electrical coupling | 1 | #1346 potted conduit nipple |
| 1 | #8 Ring tong terminal | 1 | Notice label (p/n 1406) |
| 1 | UL Listed label (p/n 1410) | 1 | 1/2” electrical capped elbow |
| 3 | 3/4” x 1/2” electrical bushing | 1 | 1/2” electrical close nipple |
| 1 | 1/2” electrical union | 2 | 1/2” x 7” electrical nipple |
| 1 | 1/2” x 4/1/2” electrical nipple | 1 | 1/2” electrical coupling |
| 1 | Explosion proof ‘J’ box | 1 | Current change label (p/n 1405) |

**VAPOR KIT Z084V: (See Photo D)**

| | | | |
|---|---|---|---|
| 2 | 1/2” NPT x 5/8” straight flare | 1 | 1/2” x 1” NPT bell reducer |
| 12’ | 5/8” OD copper tube, type ‘L’ | 1 | 1/2” x 1/4” x 1/2” reducing tee |
| 1 | 1/2” ball valve | 1 | 1/4” pipe plug |
| 4 | 5/8” flare nuts | 1 | 1” x 1/2” NPT reducing bush. |
| 1 | 1/2” NPT ell galv. | 1 | 1/2” NPT galv. union |
| 1 | 1/2” NPT x 2-1/2” galv. nipple | 3 | 1/2” NPT galv. close nipples |
| 2 | 1/2” NPT x 5/8” flare elbow | | |

**MATERIALS SUPPLIED BY INSTALLER:**

**Thread Sealing Compound – non-Setting, UL Classified for use on all tapered thread, non-electrical, plumbing fittings.**

**Teflon tape**

## 5. TOOLS REQUIRED:

- 1/2” or 3/8” ratchet set w/ sockets 1/4” through 9/16” + 3” extension
- 9” lineman’s pliers
- Assorted open end wrenches 1/4” through 3/4”
- Wire cutters/strippers 18 AWG and 26 AWG
- 1-1/8” Greenlee type sheet metal punch
- Mechanical hand drill (egg-beater type)
- Assorted drill bits 1/16” through 7/16”
- Assorted screwdrivers (flat blade-one must be 1/8” wide and Phillips)
- 5/8” copper tube bending tool
- 5/8” copper tube flaring tool

- **Copper tubing cutter**
- **Electrical multi-meter**
- **Small hand brush (1-1/2" thick, for clearing chips)**
- **12" adjustable wrench**
- **10" pipe wrench**
- **Tape measure**
- **Allen wrenches**

**6. DISPENSER ACCESS:**

- **Secure Dispenser Access keys from Station Management.**
- **Lock-out and tag-out all electrical power to dispenser being modified.**
- **Remove both lower dress panels.**
- **Remove side skin on the left side as viewed from the 'A' side ('J' box). This is the side where the 1" balance vapor pipe is installed.**
- **Open both upper doors to the electronics compartment.**

**7. Survey – Scope of Work:** ***Perform this step before beginning steps 8 thru 10.***

**Read and familiarize yourself with the theory of operations sheet and wiring instructions for the VP1000 Vapor Pump. The installation of the pump is accomplished by rotating the motor mounting bracket bolting it to the dispenser frame on the same side as the electrical 'J' box in the free space on the left hand side, see photos E & F. From this survey, you will have an indication of where the vapor plumbing fittings need to go and where the electrical conduits need to be routed. The Healy potted conduit nipple is installed in the vapor barrier above the meters, in a 1 1/8" hole that is already available but is plugged. See Photo K and Section 9.** ***CAUTION:*** ***ALL POWER TO DISPENSER UNDER MODIFICATION SHOULD BE COMPLETELY DISCONNECTED AND CAPPED OFF AT JUNCTION BOX TO AVOID UNINTENTIONAL FEEDBACK FROM OTHER DISPENSERS!!***

**Photo E**

**Photo F**

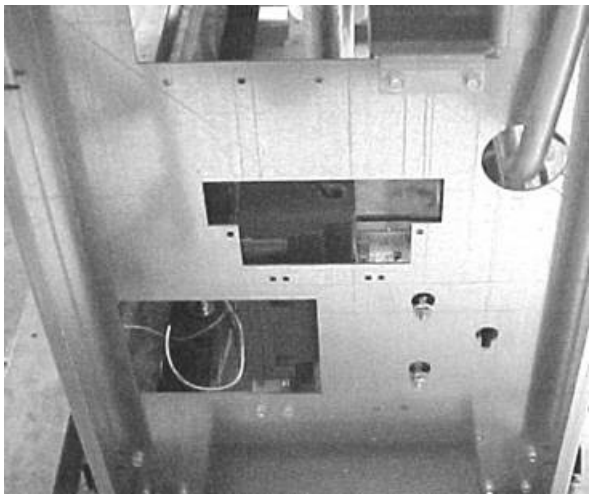

## 8. INSTALLING THE HEALY VP1000 SYSTEM:

- **Locate the 1” vapor down pipe on the side of the cabinet and remove the ‘U’ bolt that secures the pipe to the cross rail in the hydraulics area.**
- **On the top of the down pipe, loosen the two flare nuts and release the two vapor pipes coming into the tee from each side of the dispenser. Caution: the pipe is now loose and could fall down, see photo G.**
- **Remove the pipe from the dispenser and remove the tee from the pipe. Save the tee, discard the pipe.**
- **Use pipe dope and install a 1” x 1/2” NPT reducer bushing into the branch of the tee.**
- **Install a 1/2” NPT x 5/8” straight flare fitting into the reducer installed above.**
- **Re-install the tee back into the dispenser with the branch facing downward and re-connect the vapor tubes removed earlier. Be sure to tighten the vapor tube flare nuts securely, see photo H.**
- **Get the VP1000 pump and looking from the front (pump end), remove the four screws holding the black mounting bracket to the motor and reposition the bracket 90° clockwise, then re-install the screws. This keeps the pump inlet in the correct “up” orientation when mounted in the cabinet, see photo E.**
- **Place two of the 1/4”- 20 mounting bolts, flat washers, lock washers and nuts loosely together and into the slots on the motor mounting base.**
- **On the left side of the cabinet (‘A’ side with ‘J’ Box), notice the three keyhole punch-outs, see photo F. Lift the motor and push the washer/nut combinations through from inside the cabinet to mount the motor tight to the side frame.**

**Photo G**

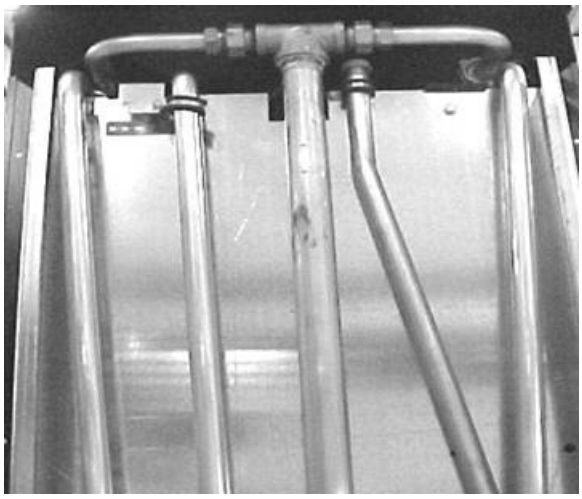

**Photo H**

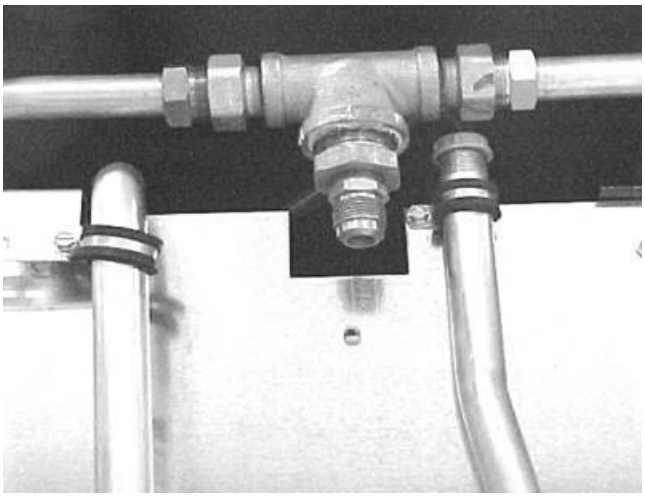

**Photo I**

**Photo J**

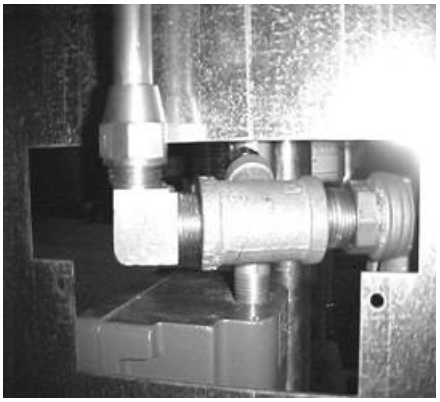

**Photo K**

**Use Teflon tape on the following steps.**

- **Get the 1/2” galvanized union and thread a 1/2” galvanized close nipple into each end.**
- **Separate the union and install the end that does not have the nut on it into the inlet of the vacuum pump. To the other end of the union, assemble the 1/2” galvanized elbow and then a 1/2” x 2-1/2” galvanized nipple into the elbow, see photo I.**
- **To the nipple above, thread on the 1/2” ball valve so that when the handle is in the open position it faces you. Completely tighten the ball valve to be about 30° below horizontal to the right, see photo I.**
- **To the valve, install a 1/2” close nipple then the 1/2” x 1/4” x 1/2” reducing tee and completely tighten with the branch of the tee facing to the right when looking from the union end, see photo I.**
- **Install the 1/4” pipe plug into the reducing tee and completely tighten.**
- **Install and completely tighten the 1/2” NPT x 5/8” flare elbow into the tee with the flare facing up, opposite the union fitting, see photo J.**
- **Take the above assembly and feed over the pump motor so the flare elbow protrudes through hole in the side frame and assemble the union collar to hold the assembly in place on the motor. Completely tighten the union collar positioning the assembly as shown in photos I & J.**
- **Install a 1/2” x 5/8” flare elbow into the outlet of the VAC pump and tighten to face either the vapor tee mounted on the dispenser frame if available or the 1” vapor riser.**
- **Measure, cut, install flare nuts and flare a piece of 5/8” OD copper tube to fit between the flare fitting in the top vapor manifold and the flare elbow assembly just installed, see photo K.**

## 9. INSTALLING THE SEALED NIPPLE ASSEMBLY:

- **In the extreme left corner, "A" (J box) side of the vapor barrier there is a sealed knockout, (may be obscured by a plastic rain tray). Remove the bolt, nut and washer assembly to open the hole.**
- **Install the 1346 sealed nipple assembly by removing the first nut and washer, turn the other nut up fully on the threads and feed the wires down from the top of the vapor barrier to the hydraulics area, see photo L. Re-install the washer and nut over the wires and turn onto the first couple of threads leaving the nipple loose at this time.**
- **Get a 1/2" x 7" conduit nipple and install the female half of the electrical union on one end and a 3/4" x 1/2" reducer on the other end. To the reducer, attach the 3/4" electrical coupling. Install this assembly to the sealed nipple, see photo M. NOTE: Electrical fittings must be installed with a minimum of five threads.**

**Photo L**

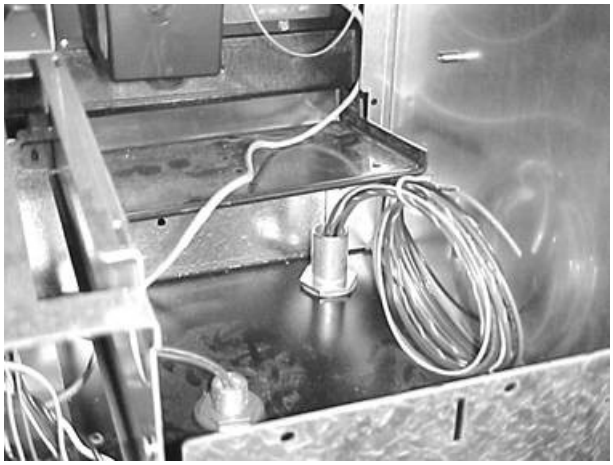

**Photo M**

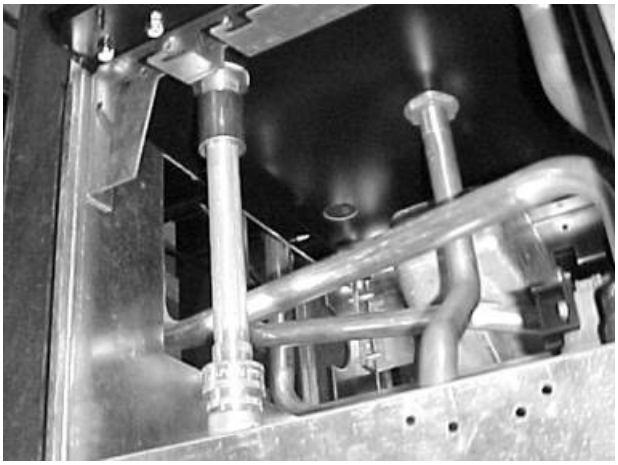

- **On the pump motor, install a 1/2" x 7" conduit nipple, a 1/2" electrical coupling and a 1/2" x 4-1/2" nipple, see photo N.**
- **Get the electrical "J" box, remove the cover and install a 3/4" x 1/2" reducer bushing into each hub. Install the "J" onto the 4-1/2" nipple positioned as shown in photo N.**
- **Install a 1/2" electrical close nipple to "J" box followed by the pull elbow, see photo O. Remove the pull elbow cover.**
- **Install the male half of the electrical union to the pull elbow. Run wires through the pull elbow and into the "J" box. Connect the union half's together being careful not to pinch wires, reinstall the pull elbow cover and tighten the nut on the potted nipple.**
- **At the 'J' box, cut all the wires leaving at least 6" on each piece. Strip all wires about 1/2" and join the wires color for color, using wire nuts supplied. Coil all wires and place into box, replace the cover.**

**Photo N**

**Photo O**

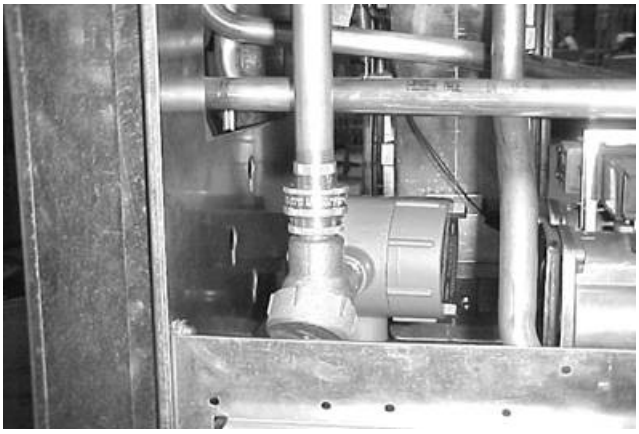

## 10. WIRING THE ELECTRONICS

- **Place the module loosely in the area for mounting, see photo P. Dress the harness wires from the module under the partition and up to the valves board in the center compartment, see photos P & Q.**
- **Connect the wires from the sealed nipple to the interface module as follows:**
  - **Black wire to ‘motor ‘ on module**
  - **White wire to ‘neutral’ on module**
  - **Red wire (either) to ‘output 1’ on module**
  - **Red wire (other) to ‘output 2’ on module**
  - **Orange wire to ‘fault common’ on module**
  - **Purple wire to ‘fault input’ on module**
  - **Green wire needs a #8 ring tong lug (provided) installed and connected to any chassis ground (frame)**
- **Locate the harness cable from the module and bring up to the valves board. Disconnect the existing valve wire connector in the board (J3 connector, labeled Solenoid Valves) and plug it into the harness male connector. Plug the original female connector into the male connector on the harness, see photo Q.**
- **Mount the module as shown in photo R, using the 8-32 x 3/4” screw and nut supplied in the electrical kit. There is an existing hole in the chassis that is the right size and in the right place for the screw.**
- **Locate the black and white twisted pair wire from the module with a connector and plug into any vacant receptacle on the power distribution board (CM301) located at the center of the front frame rail.**

**Photo P**

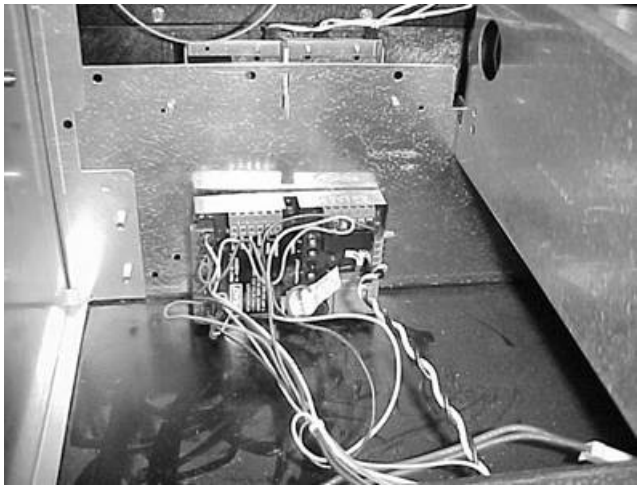

**Photo Q**

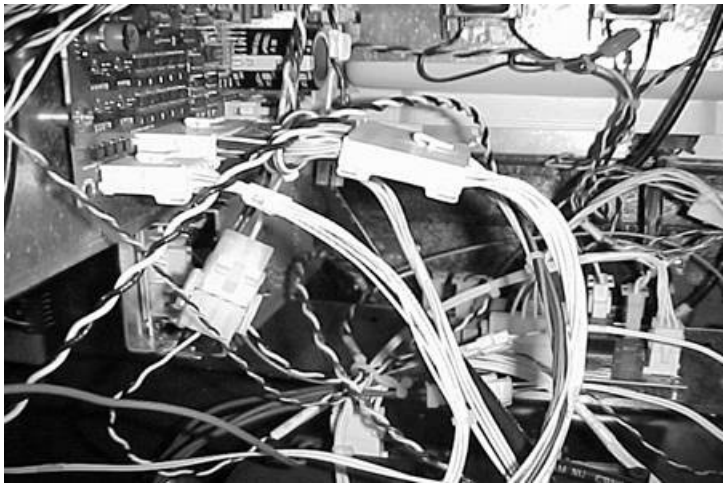

**Photo R**

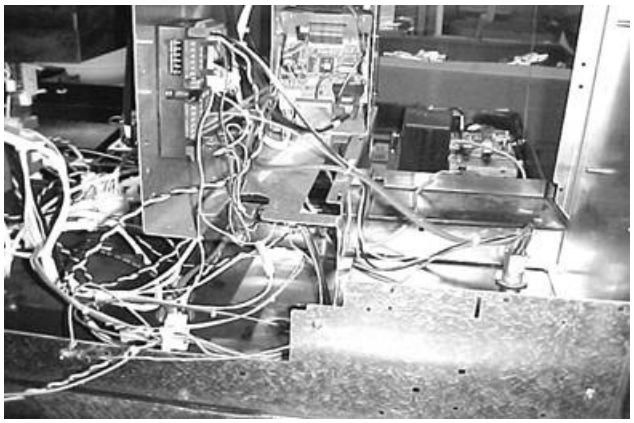

**Install the following labels supplied:**

- **NOTICE label for current increase (1405), install on the inside of the cabinet panel near the existing power consumption label, see photo S.**
- **Large NOTICE label (1406) relating to the vapor recovery upgrade and how to reset the electronic module should be installed near the module, where it will be readily visible to a service technician on the inside of the cabinet near the nozzle spout housing, see photo T.**
- **UL, retrofit kit identification number (1410), install near the electronic module.**

**Photo S**

**Photo T**

## 11. CONNECTING HEALY SYSTEMS DISPENSING EQUIPMENT

- ❑ **Completing the connection of Healy Systems dispensing equipment requires the installation of Healy Systems Phase II dispenser adaptors, hoses and nozzles (Hanging Hardware).**
- ❑ **If applicable, remove existing non-Healy hanging hardware (from the dispenser product outlet adaptor to and including the nozzles).**
- **Vapor ready dispensers will require a Healy Systems adaptor to make the hose threads compatible with other Healy Systems equipment. Install following instructions packed with the adaptor. Various adaptors are available, depending on how the dispenser is configured: M34 metric (Healy designation F3 or S3) or balance ready (Healy designation S4).**
- **Healy Vapor Recovery Hoses are available in various lengths to satisfy local ordinances and still provide "far side" fueling capability. Install these following instructions contained on the shipping box.**
- **Breakaways are required: Install either Model 8701VV breakaway or Model 807 swivel breakaway; install using the instructions supplied with the unit.**

- **The Healy Systems nozzle Model 900 (EVR) series is the only nozzle necessary to complete the upgrade. Check to be sure that the nozzle hanger is mounted in the highest position. Be sure to check for proper fit in the nozzle holster and that the nozzle can be locked in the off position. Also, be sure that when the nozzle is locked, that the dispenser cannot be activated from the locked position.**

## 12. VP1000 Theory of Operation

**The Healy Systems VP1000 is a self-contained rotary vane pump, designed for gasoline vapor recovery utilizing various parts of the Healy System Vapor Recovery product line. It is intended for use by either OEM dispenser/pump manufacturers or as an after market add-on to make existing equipment compatible with Healy System technology. In order to convert to 'others' equipment, an electronic interface is required to adapt the targeted pump/dispenser to the new vapor recovery equipment. The interface senses when authorization to dispense has been given and sends signals to the motor to operate at a low speed for one hose, or a higher speed for two hoses. It also functions to shut off the pump/dispenser if it senses that the vapor pump is not operating properly. The vacuum is regulated at a level sufficient to clear liquid gasoline from the vapor path in MPD applications. The actual amount of vapors withdrawn is controlled by the Healy nozzle, itself, in response to the liquid gasoline flow rate.**

### MOTOR SPECIFICATIONS

| | |
|---|---|
| Horsepower | 1/8 |
| Voltage | 120VAC |

### INTERFACE SPECIFICATIONS

| | |
|---|---|
| Input voltage | 120 VAC |
| Relay current capacity | 5A AC |
| Input signals | 120 VAC |
| Motor Input signal | 5 VDC @ 20 Hz 50% Duty Cycle |

## 13. TESTING THE SYSTEM:

- **Carefully review all work completed, being sure all mechanical joints are thoroughly tightened and electrical connections sealed.**
- **Open the product crash valves and restore power to the dispenser.**
- **With the power on, but no nozzles authorized, the VP1000 should not be running (unless the ambient temperature is below 40°F), but the power LED (yellow) should be energized on the interface module.**
- **Authorize one handle and the vacuum system should activate when the gasoline flow control valve is engaged. Repeat for all other nozzles, individually testing each nozzle on each side of dispenser. With each authorization, one of the green LED's on the interface module should illuminate and the VP1000 activate.**
- **Note: For unihose dispensers, conduct individual tests for each product grade on each side of the dispener to ensure that the same LED activates for all grades on the same side. If the other LED activates, wiring needs to be corrected.**
- **Authorize one nozzle and listen to the speed of the VP1000. With only one nozzle activated, the speed will be slower than if a nozzle on <u>each side</u> is activated. Activate a nozzle on the other side of the dispenser and listen for the speed to change.**
- **To test the tightness of the vapor plumbing installed on the suction side of the system requires a 0-100" water column gauge. Connect the gauge into the 1/4" test port of the reducing tee installed earlier in section 8, photo I. Continue by following and completing the START-UP / NEW INSTALLATION / WARRANTY / ANNUAL TESTING FORM.**

## 14. TROUBLESHOOTING THE VP1000:

- **Use extreme care and caution when performing the tests listed below. If 120 VAC is accidentally applied to the fault or DC terminals, the module will be destroyed.**
- **With power applied to the dispenser, but no products authorized, there should be 120 VAC between neutral and 120 VAC on the module terminal strip.**
- **As above, with any product authorized, there should be single speed power applied to the VP1000. Verify this by checking for 2-3 VDC from OUTPUT 1 (RED WIRE) to FAULT COMMON (ORANGE WIRE), (or from OUTPUT 2 TO FAULT COMMON) also; one GREEN LED should be illuminated. With a second product authorized on the opposite side of the dispenser *i.e.* one product on each side, the motor should operate at higher speed and there should be 2-3 VDC on both output 1 and 2 (to fault common) and both GREEN LED's should be illuminated.**

- **With the pump running, a fault can be simulated by shorting, with a jumper wire, the "FAULT INPUT" (purple wire) to FAULT COMMON (orange). This should cause the motor to shut off, the solenoid valves to lose power and the dispenser to shut down. Also, as long as the short is maintained, the red LED will be illuminated. Removing the short will not automatically reset the module. To reset the module, remove the short, remove power to the dispenser for twenty seconds and restore power. The module should now be reset and the red led extinguished. This can also be accomplished by using the power reset (PWR RESET) on the module.**
- **If diagnosing a problem where the LED is already illuminated, a steady light indicates a low current condition, therefore expect a vane or rotor problem. If the LED is blinking, that indicates a high current condition and would expect to find a jammed rotor or vapor line flooded with product. See Start-up / New Installation / Warranty / Annual Testing Form.**
- **The electronics of the motor will make three attempts to have a successful start of the motor. If it detects a problem, on the fourth unsuccessful start, it will short the fault line to signal minus (DC-) and shut down the electronics.**

**MC100 Interface Module**

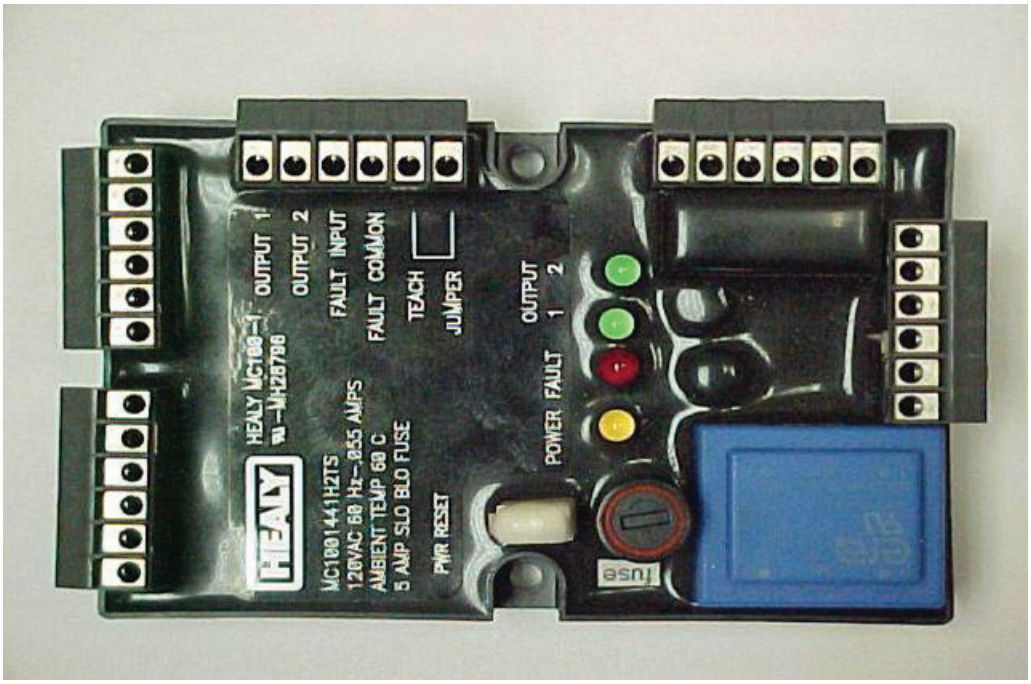

## 15. VP1000 Vane & Rotor Service & Replacement Guide

**Caution** **Disconnect power before beginning service.**

1. The work area **must** be clean and have sufficient lighting.
2. Disconnect the vapor piping connected to the **IN** and **OUT** ports of the VP1000 cover assembly.
3. Remove the four Allen head screws and lock washers that secure the pump cover assembly to the pump housing and remove the cover carefully.

**Caution** **Use a spill cloth when removing the cover, as there may be some gasoline inside the pump cavity**.

4. Carefully turn the rotor assembly by hand until the shaft key notch is at the 12 o'clock position. (See Figure 1)
5. Remove the rotor, vanes and shaft key from the pump housing.

**Note:** Place your hand or a container under the rotor while removing. Do not use any sharp objects that would scratch the surfaces of the pump cavity, pump shaft, rotor, or vanes.

6. Rotate the shaft by hand. If the shaft does not rotate freely, the entire vacuum pump needs replacement (p/n VP1000-5).
7. If the rotor and vanes are cracked, chipped, excessively worn or excessively dirty, the rotor and vanes should be replaced because cleaning will not remedy these conditions (p/n VP1000VRC or VP1000VRC-P).
8. If there is no visible damage, use a lint-free cloth with isopropyl alcohol to clean the rotor and vanes.
9. Using a lint-free cloth with isopropyl alcohol, thoroughly clean: the inside of the pump ring and rear of the pump cavity, the rotor shaft, and the inside of the pump cover.
10. Reposition the shaft (if necessary) so that the shaft key notch is in the 12 o'clock position. Install the cleaned original or new shaft key onto the shaft.
11. Carefully install the cleaned original or new rotor onto the shaft followed by the cleaned original or new vanes into the rotor.

**Note:** The rotor assembly should slide on to the shaft easily, without excessive force. (Rotors and vanes are reversible)

12. Lightly lubricate and install the new O-Ring for the pump housing.

**Note:** Do not allow any lubricant to get inside the pump housing.

13. Install the pump cover using the four Allen head screws and lock washers removed in step 3 and cross tighten.

**Note:** Use caution when sliding the pump cover over the O-Ring seal to prevent cutting or tearing.

14. Re-connect the vapor piping to the **IN** and **OUT** ports of the pump cover assembly that was removed in Step 2.
15. Re-apply power. Test for normal operation. (See VP1000 Vacuum Performance Test Procedure)

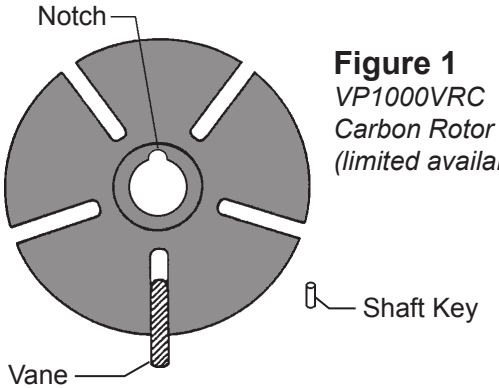


**Figure 1**
*VP1000VRC Carbon Rotor (limited availability)*

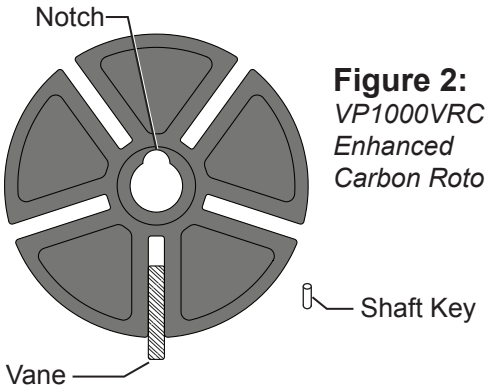


**Figure 2:**
*VP1000VRC-P Enhanced Carbon Rotor*

START-UP/NEW INSTALLATION/ WARRANTY/ ANNUAL TESTING FORM (Rev. 10/07)
HEALY VP1000 VACUUM PUMP

Date_____

**BOTH SIDES OF THIS TEST FORM MUST BE COMPLETED FOR NEW INSTALLATIONS**

- **Start-up / New installations – complete SIDE A and sections 3, 4, 5 and 6 of SIDE B. Submit forms to Healy Systems.**
- **Warranty Service or Annual Testing – complete contact information, dispenser make, vacuum pump serial # and the tests in sections 1 and 2 on SIDE A and conduct the appropriate tests specified on SIDE B. Submit Forms to Healy Systems.**

| | | |
|---|---|---|
| SERVICE COMPANY NAME | TELEPHONE | |
| SERVICE TECHNICIAN | HEALY TECH CERT # | |
| STATION ADDRESS | CITY | STATE |
| **DISPENSER MAKE** | **VACUUM PUMP SERIAL #** | |

# SIDE A

| **DISPENSER EQUIPMENT CHECKLIST - Parts A-1 and A-2** | | **YES** | **NO*** |
|---|---|---|---|
| **A-1** | Is all the installed dispenser hanging hardware listed in Exhibit 1 of Executive Order VR-201 or VR-202? | | |
| **A-2** | Proper installation of the VP1000 requires the test port and ball valve on the inlet side of the vacuum pump. Are the test port and ball valve installed correctly? | | |
| | ***If the answer to either A-1 or A-2 is NO, the Healy Warranty is Void.** | | |

## A-3

- THE FOLLOWING TEST WILL PERFORM A POSITIVE PRESSURE LEAK CHECK OF THE VACUUM PUMP, DISPENSER VAPOR PIPING, HANGING HARDWARE AND ALL NOZZLES ON BOTH SIDES OF THE DISPENSER.
- THE VP1000 OUTLET IS NOT CONNECTED TO UNDERGROUND PIPING DURING THIS TEST.

**CAUTION: REGULATE GASEOUS NITROGEN TO 2.5 PSI (~70" WC) MAXIMUM BEFORE TESTING**

1. Install a 0-100 inch water column (" wc) mechanical gauge at the VP1000 test port.
2. Use the water column gage positive (high) pressure port.
3. Gaseous nitrogen gas can now be connected to the outlet (exhaust) port of the VP1000.
4. Test pressure **cannot** exceed 70" wc.
5. **Slowly** introduce the gaseous nitrogen to a pressure between 60 – 70" wc.
6. After reaching the pressure range, close the valve supplying the gaseous nitrogen.
7. Record the initial pressure reading on the gauge - observe and record the final pressure reading after 60 seconds.
8. Leaks must be repaired when the pressure falls more than 4" wc in 60 seconds.
9. Retest until all leaks have been repaired.
10. Record test results in Section A-4.

| **A-4**<br>**PRESSURE TEST**<br>**2.5 PSI (~70"wc) Maximum** | **Initial Pressure test reading ("wc)** | **Pressure test reading after 60 seconds ("wc)** |
|---|---|---|

START-UP/NEW INSTALLATION/ WARRANTY/ ANNUAL TESTING FORM (Rev. 10/07)
HEALY VP1000 VACUUM PUMP

Date_____

**BOTH SIDES OF THIS TEST FORM MUST BE COMPLETED FOR NEW INSTALLATIONS**

- **Start-up / New installations – complete SIDE A and sections 3, 4, 5 and 6 of SIDE B. Submit forms to Healy Systems.**
- **Warranty Service or Annual Testing – complete contact information, dispenser make, vacuum pump serial # and the tests in sections 1 and 2 on SIDE A and conduct the appropriate tests specified on SIDE B. Submit Forms to Healy Systems.**

# SIDE B

| *Warranty Service*<br>Complete Troubleshooting Sections<br>**B-1 and B-2** | *Start-up/ New Installations/ Annual Testing*<br>Complete Sections<br>**B-3 through B-6** |
|---|---|

## B-1

**Control Module Fault Light**

**(Circle one) Flashing (LED) Steady (LED)**

1. All fault conditions require removal and cleaning or replacement of the rotor and vanes located inside the vacuum pumps round front cover assembly. Use the **VP1000 ROTOR & VANE SERVICE AND REPLACEMENT GUIDE** in the applicable dispenser retrofit manual of the ARB Approved Installation, Operation and Maintenance Manual for Executive Orders VR-201-K and VR-202-K.
2. Clean all surfaces including vanes, rotor, rotor housing and cover assembly.
3. Manually spin and inspect the motor shaft for bearing wear before re-installing the rotor kit.
4. Replace motor when bearings or shaft are damaged or worn.
5. Check O-ring seal before replacing rotor cover assembly.

## B-2

Re-Assemble / Reset Vacuum Pump and Module. (Power must be removed from both the vacuum pump and the **module for 20 seconds to reset the system**) using the power reset switch on the MC100 module.

## B-3

Dispenser Vapor Line Integrity Test

1. Install 0-100 inch water column (“ wc) vacuum mechanical gauge at the VP1000 test port.
2. Authorize the dispenser for fueling. The VP1000 will begin to run.
3. Close the ball valve at the pump inlet.
4. Record the initial vacuum reading on the gauge – observe and record the final vacuum reading after 60 seconds.
5. Open the ball valve at the pump inlet.
6. Leaks must be repaired when the vacuum reading falls more than 4” wc in 60 seconds.
7. Retest until all leaks have been repaired.
8. Record data in Section B-4.

**Note: If the initial vacuum reading is less than 60” wc, it could indicate a problem with the VP1000. Remove the dispenser from service. Use the troubleshooting section of the manual to investigate problem or contact the FFS Technical Help Desk at 800-984-6266 for assistance.**

## B-4

| VACUUM TEST Using VP1000 as vacuum source | Initial Vacuum test reading (“ wc) | Vacuum test reading after 60 sec. (“ wc) |
|---|---|---|
| | | |

## B-5

Dispenser Vaacuum Test

With one side of the dispenser authorized (VP1000 running) and the ball valve at the pump inlet open, dispense in handheld position a minimum of 0.5 gallons of fuel into a vehicle or test tank. Record the vacuum level while dispensing. Repeat test for the other side of the dispenser.

1. Side “A” Dispensing Vacuum _____” wc
2. Side “B” Dispensing Vacuum _____” wc

**Note: If the dispensing vacuum is less than 60” wc, remove the dispenser from service. See the troubleshooting section of the manual or contact FFS Technical Help Desk at 800-984-6266 for assistance.**

## B-6

Audible Increase Test

Test the VP1000 Vacuum Pump for normal operation. Use the 6 step procedure titled, “Testing the VP1000 Vacuum Pump for normal operation using the following test procedure:” in Section 1.1 (Weekly Inspection and Testing) of the Healy Systems Scheduled Maintenance document in the ARB Approved Installation, Operation and Maintenance Manual for the Healy Phase II EVR System not Including ISD. This is to verify that the pump recognizes when both sides of the dispenser are activated for fueling.

Does the VP1000 Vacuum Pump change speeds (audible increase) when both sides are activated for fueling?

Yes No

If the answer is no, **use the troubleshooting section of the manual to investigate problem or contact the FFS Technical Help Desk at 800-984-6266 for assistance.**

| Repairs - Comments | To Obtain Returned Materials Authorization number (RMA#) Call 800-984-6266<br>Forms can be faxed to Franklin Fueling Systems Customer Service at 800-225-9787 |
|---|---|

INSTALLATION
OPERATION

# Wayne Healy Phase II EVR System (Assist)

for

**Reliance G5200 Series**

**Reliance G6200 Series**

**Select 3/G7200 Series**

**Century 3/G2200 Series**

This Manual is to be used for new, replaced, retrofitted, or reconditioned dispensers/pumps.

DRESSER
Wayne

**DANGER**

## PLEASE READ THIS MANUAL BEFORE YOU BEGIN

Dispensers have both electricity and a hazardous, flammable, and potentially explosive liquid. Failure to follow the below precautions and the Warning and Caution instructions in this manual may result in serious injury or death. Read every tag attached to the pump before commencing installation. Follow all rules, codes, and laws that apply to your area and installation. ***Consult the full Installation/Operation manual that came with your dispenser for information NOT pertaining to the Healy portion of the installation.***

## SAFETY PRECAUTIONS - INSTALLATION AND MAINTENANCE

Always make sure ALL power to the dispenser is turned OFF before you open the dispenser cabinet for maintenance. Physically lock, restrict access to, or tag the circuit breakers you turn off when servicing the dispenser. If applicable, be sure to trip (close) the emergency valve(s) under the dispenser BEFORE beginning maintenance.

Make sure that you know how to turn OFF power to the dispenser and submersible pumps in an emergency. Have all leaks or defects repaired immediately.

## EQUIPMENT PRECAUTIONS

Be sure to bleed all air from the product lines of remote dispensers and prime suction pumps before dispensing product, otherwise, damage to the equipment may occur. Always use the approved method for lifting the dispenser. Never lift by the nozzle boot, sheet metal, etc., otherwise equipment damage or personal injury may occur.

## USE ONLY GENUINE PARTS

For product liability to be valid, no changes may be made to the equipment without the written consent of Dresser Wayne.

## HOW TO CONTACT DRESSER WAYNE

Trouble with the installation and operation of the pump should be referred to your authorized Wayne® service personnel or Wayne Technical Support (1-800-926-3737).

## INDICATORS AND NOTATIONS

| | |
|---|---|
| **DANGER** | Danger indicates a hazard or unsafe practice which, if not avoided, will result in severe injury or possibly death. |
| **WARNING** | Warning indicates a hazard or unsafe practice which, if not avoided, may result in severe injury or possibly death. |
| **CAUTION** | Caution indicates a hazard or unsafe practice which, if not avoided, may result in minor injury. |
| **NOTE:** | Important information to consider, otherwise, improper installation and/or damage to components may occur. |

# Table of Contents

**Title**


**1 Purpose**

**2 Safety**

**3 Models Covered**

**4 Wiring**

4.1 Select & Century Wiring

4.2 Reliance Wiring – G6201D/ and G5201D/

4.3 Reliance Wiring – G6202D/, G5202D/, G6203D/ and G5203D/

**5 Hydraulic Connections**

5.1 Select & Century Base Layout

5.2 Reliance Base Layout

**6 VP1000 Theory of Operation**

**7 Testing the System**

**8 Troubleshooting the VP1000**

**9 VP1000 Vane & Rotor Service & Replacement Guide**

**10 View of Dispensers**

10.1 View of Reliance Dispenser

10.2 View of Select & Century Dispenser

**Start-Up/New Installation/Warranty/Annual Testing Form**

# 1 Purpose

This procedure describes how to connect to and operate a Healy Systems, Inc. Model VP1000 Vapor Recovery pump in Wayne Reliance™ G6200 and G5200 series, Wayne Select 3/G7200 series, and Wayne Century series 3/G2200 gasoline dispensers. The installer shall be a skilled petroleum technician and thoroughly familiar with the requirements of State, Federal, and local codes for installation and repair of gasoline dispensing equipment. Also, they shall be aware of all the necessary safety precautions and site safety requirements to assure a safe and trouble free installation.

**Note: All electrical and hydraulic plumbing fittings referred to in these instructions must be UL "listed" or "recognized" for the purpose.**

**Note:** Installations of vapor piping into the inlet side of the vacuum pump should be sloped such that the natural flow direction is toward the vacuum pump. However, it is permissible to have a piping slope tilted away from the vacuum pump provided that all other applicable tests (Dispenser integrity and V/L) meet the specifications outlined in the appropriate section of the Executive Order and ***ARB Approved Installation, Operation and Maintenance Manual***.

**Note:** For installations with In-Station Diagnostics (ISD), the vapor flow meter shall be installed on the down stream side of the vacuum pump. Every effort shall be made to install the vapor flow meter so that vapor piping between the vacuum pump and the vapor flow meter is sloped such that the natural flow direction is toward the vapor flow meter. However, it is permissible to have the piping slope away from the vapor flow meter provided that all other applicable tests (Dispenser integrity, V/L and ISD Operability) meet the specifications outlined in the appropriate section of the Executive Order and ***ARB Approved Installation, Operation and Maintenance Manual***.

# 2 Safety

Before installing the equipment, read, understand and follow:

- The National Electrical Code (NFPA 70)
- The Automotive and Marine Service Code (NFPA 30A)
- Any national, state and local codes that may apply.

The failure to install the equipment in accordance with NFPA 30A and 70 may adversely affect the safe use and operation of the system.

Accurate, sound installations reduce service calls: Use experienced, licensed contractors that practice accurate, safe installation techniques. Careful installation provides a sound troubleshooting framework for field repairs and can eliminate potential problems.

1. Read all instructions before beginning.
2. Follow all safety precautions:
   - Barricade the area.
   - Do not allow vehicles or unauthorized people in the area.
   - Do not smoke or allow open flames in the area.
   - Do not use power tools in the work area.
   - Wear eye protection during installation.
3. Use circuit breakers for multiple disconnects to turn off power and prevent feedback from other dispensers.

# 3 Models Covered

| Series | Model | Description |
|---|---|---|
| Reliance | G6201D/ & G5201D/<br>G6202D/ & G5202D/<br>G6203D/ & G5203D/ | Single Remote<br>Twin I Remote<br>Twin II Remote |
| Select | 3/G7201D/<br>3/G7242D/<br>3/G7203D/<br>3/G7207D/<br>3/G7247D/<br>3/G7208D/ | Single Remote, Island-Oriented<br>Twin I Remote, Island-Oriented<br>Twin II Remote, Island-Oriented<br>Single Remote, Lane-Oriented<br>Twin I Remote, Lane-Oriented<br>Twin II Remote, Lane-Oriented |
| Century | 3/G2201D/<br>3/G2202D/<br>3/G2203D/<br>3/G2207D/ | Single Remote, Island-Oriented<br>Twin I Remote, Island-Oriented<br>Twin II Remote, Island-Oriented<br>Twin I Remote, Lane-Oriented |

**Note: All Wayne models with the Healy Systems, Inc. Model VP1000 Vapor Recovery pump have a suffix "D3."**

# 4 Wiring

This vapor recovery system is installed into the dispenser, at the factory, and does not require any additional wiring in the field. The field wiring for the Select 3/G7200 series and Century 3/G2200 series is exactly as is shown in the respective Installation/Operation manual. For the Reliance G6200 and G5200 series, while the field wiring remains the same, there are subtle differences in the solenoid valve wiring. Field wiring for the Reliance G6200 and G5200 series is shown in the diagrams in Sections 4.2 & 4.3.

## 4.1 Select & Century Wiring

The Select (3/G7200 Series) and Century (3/G2200 Series) field wiring does not change as is already shown in the respective installation manuals. The wiring diagram shown below shows the internal wiring for the Healy components as they relate to the existing dispenser wiring.

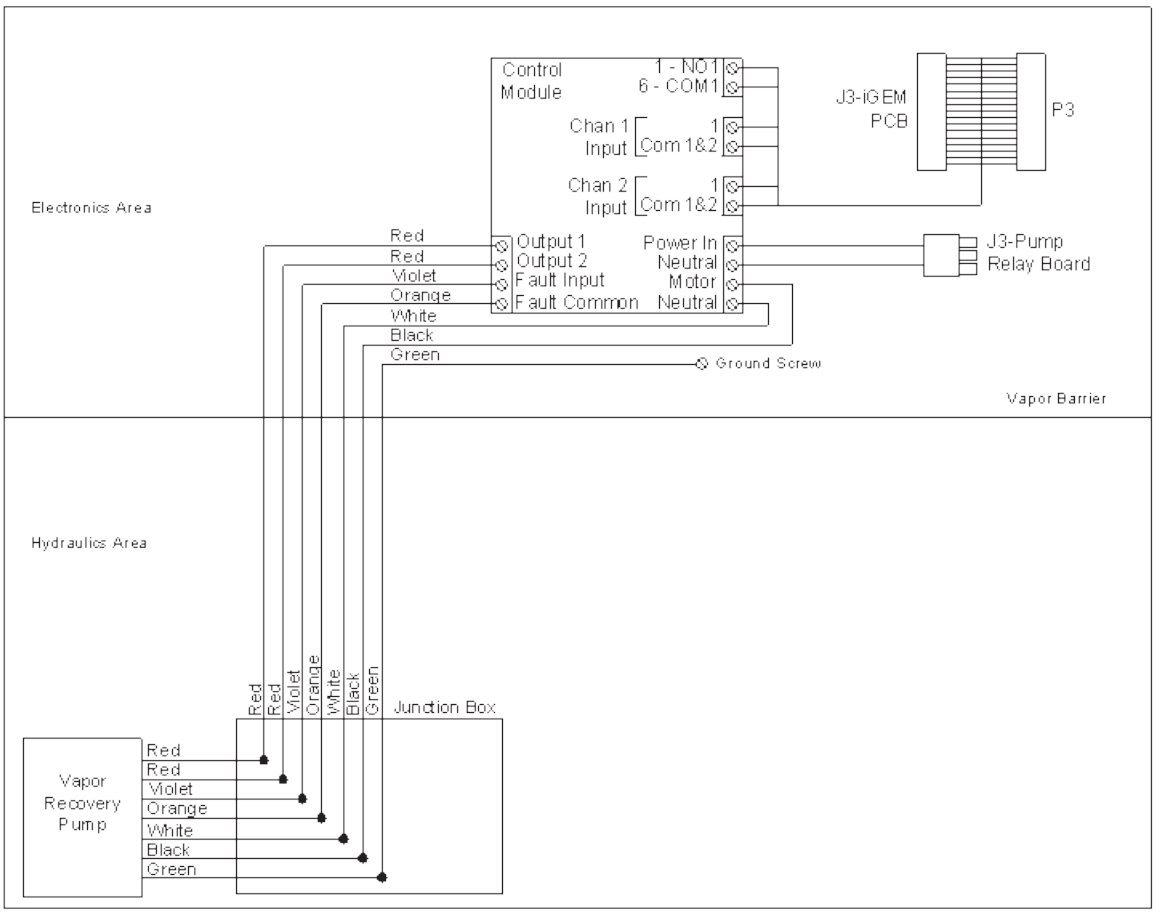

## 4.2 Reliance Wiring – G6201D/ and G5201D/

There are minor changes to the field wiring for this model as compared to what is shown in the Reliance installation manual.

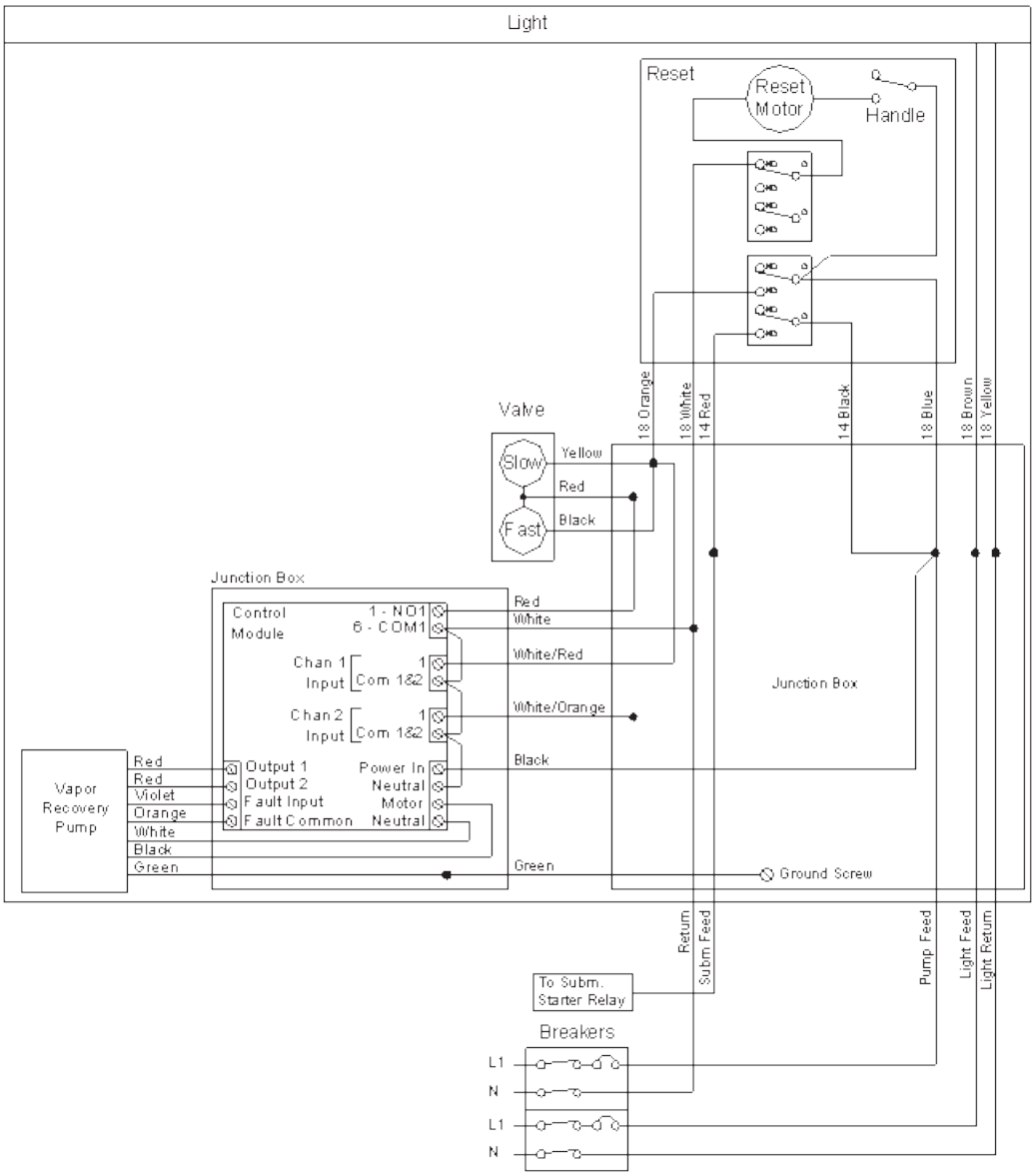

## 4.3 Reliance Wiring – G6202D/, G5202D/, G6203D/ and G5203D/

There are minor changes to the field wiring for these models as compared to what is shown in the Reliance installation manual.

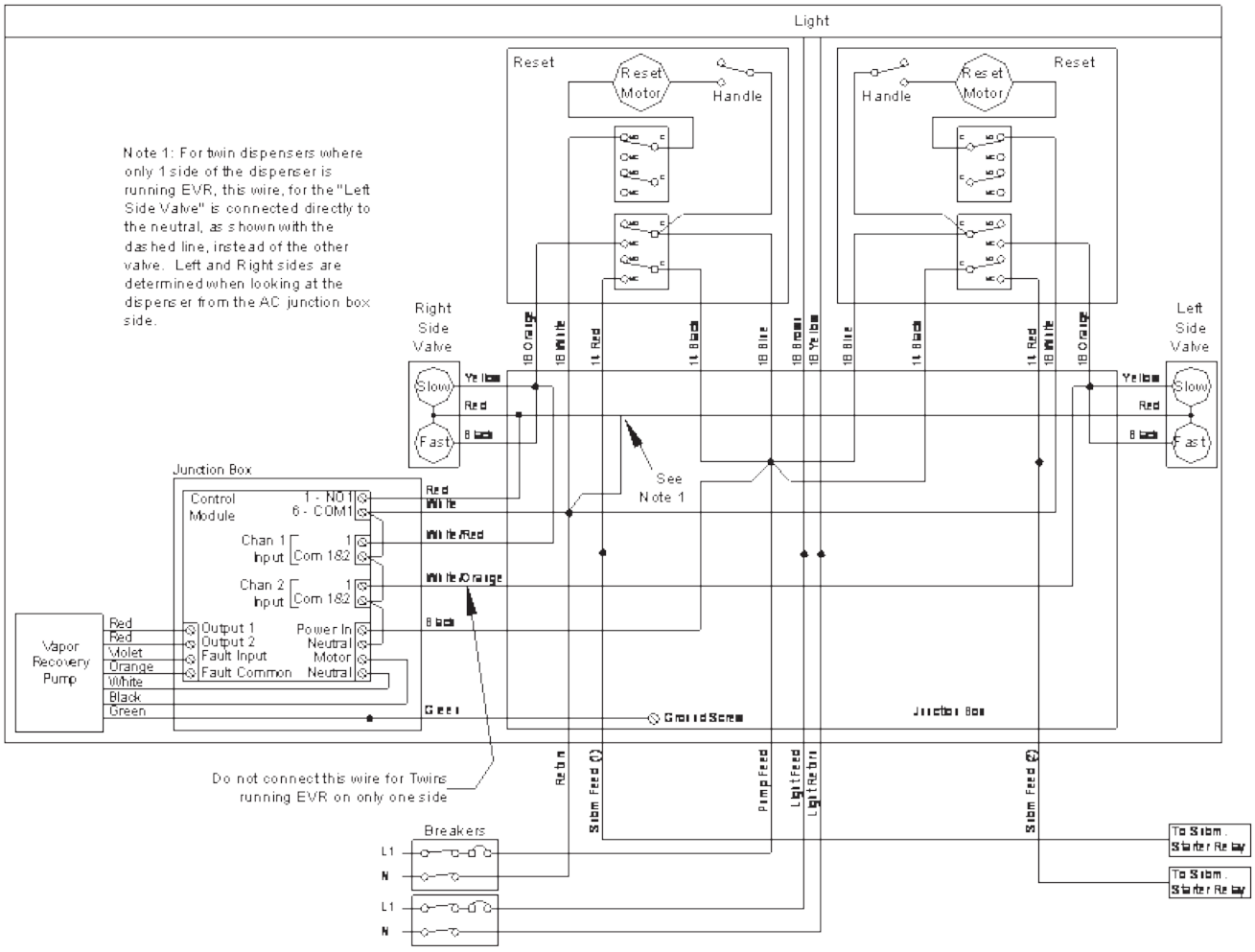

# 5 Hydraulic Connections

- A 1” NPT connection is supplied on the bottom of the Healy VP1000 pump. The location of this outlet is shown on the base layouts in Sections 5.1 & 5.2. This connection is used to return the vapors collected back to the tank.
- Completing the connection of Healy Systems dispensing equipment requires the installation of Healy Systems Phase II dispenser adapters, hoses, breakaways and nozzles (hanging hardware).
- Healy Vapor Recovery Hoses are available in various lengths to satisfy local ordinances and still provide “far side” fueling capability. Install these following the instructions contained on the shipping box.
- The Healy Systems nozzle Model 900 is the nozzle necessary to complete the upgrade. Be sure to check for proper fit in the nozzle holster and that the nozzle can be locked in the off position. Also, be sure that when the nozzle is locked, that the dispenser cannot be activated from the locked position.
- For Reliance G6200 and G5200 series dispensers, a Healy Model 1301 or 1302 Flow Limiter may be needed to keep the flow from going over 10.0 GPM.

## 5.1 Select (3/G7200) & Century (3/G2200) Base Layout

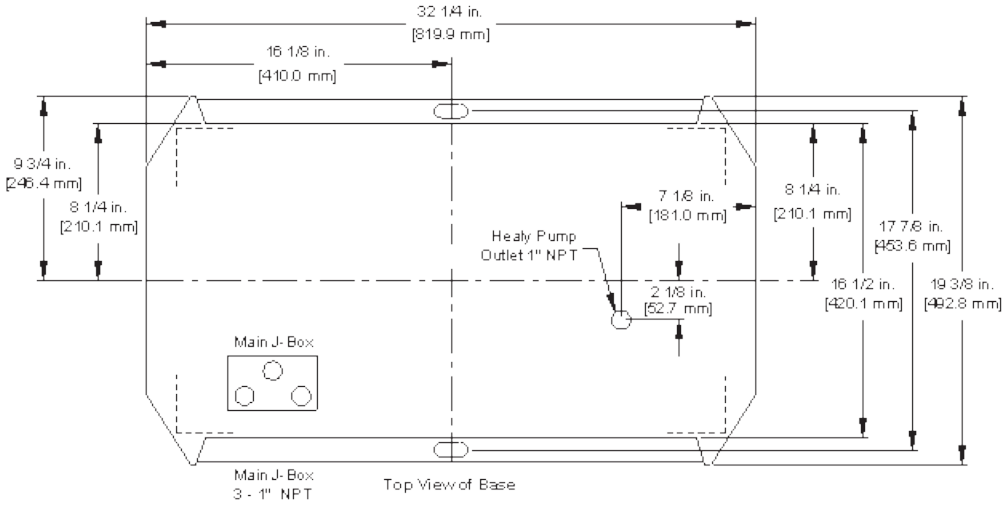


## 5.2 Reliance (G6200 & G5200) Base Layout

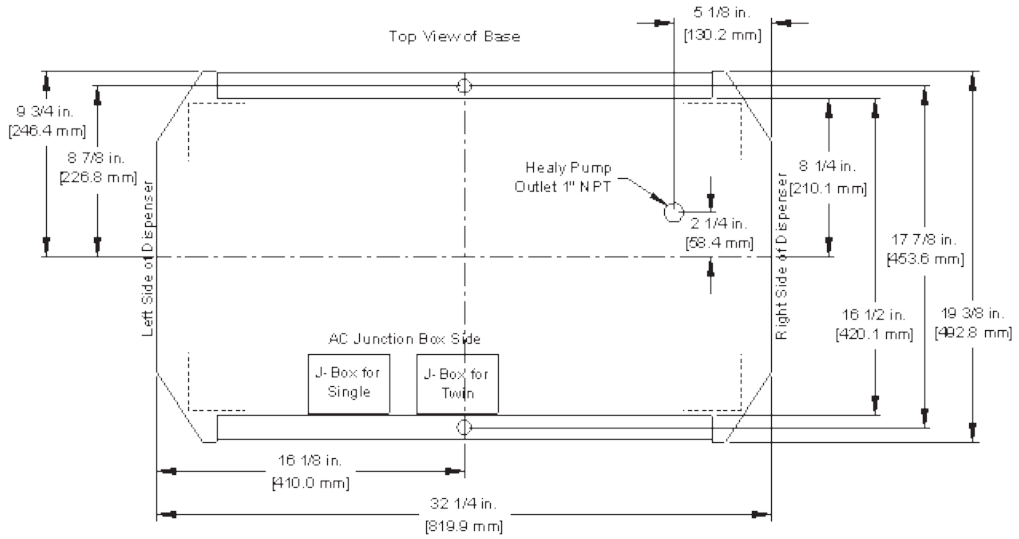

# 6 VP1000 Theory of Operation

The Healy Systems VP1000 is a self-contained rotary vane pump, designed for gasoline vapor recovery utilizing various parts of the Healy System Vapor Recovery product line. It is intended for use by either OEM dispenser/pump manufacturers or as an after market add-on to make existing equipment compatible with Healy System technology. In order to convert to 'others' equipment, an electronic interface is required to adapt the targeted pump/dispenser to the new vapor recovery equipment. The interface senses when authorization to dispense has been given and sends signals to the motor to operate at a low speed for one hose, or a higher speed for two hoses. It also functions to shut off the pump/dispenser if it senses that the vapor pump is not operating properly. The vacuum is regulated at a level sufficient to clear liquid gasoline from the vapor path in MPD applications. The actual amount of vapors withdrawn is controlled by the Healy nozzle, itself, in response to the liquid gasoline flow rate.

| | |
|---|---|
| Motor Specifications | |
| Horsepower | 1/8 HP |
| Voltage | 120 VAC |
| Interface Specifications | |
| Input Voltage | 120 VAC |
| Relay Current Capacity | 5A AC |
| Input Signals | 120 VAC |
| Motor Input Signal | 5VDC@20Hz 50% Duty Cycle |

# 7 Testing the System

- Carefully review all work completed, being sure all mechanical joints are thoroughly tightened and electrical connections sealed.
- Open the product crash valves and restore power to the dispenser.
- With the power on, but no nozzles authorized, the VP1000 should not be running (unless the ambient temperature is below 40°F), but the power LED (yellow) should be energized on the interface module.
- Authorize one handle and the vacuum system should activate when the gasoline flow control valve is engaged. Repeat for all other nozzles, individually testing each nozzle on each side of dispenser. With each authorization, one of the green LED's on the interface module should illuminate and the VP1000 activate.
- Note: For unihose dispensers, conduct individual tests for each product grade on each side of the dispener to ensure that the same LED activates for all grades on the same side. If the other LED activates, wiring needs to be corrected.
- Authorize one nozzle and listen to the speed of the VP1000. With only one nozzle activated, the speed will be slower than if a nozzle on <u>each side</u> is activated. Activate a nozzle on the other side of the dispenser and listen for the speed to change.

  Note: Some dispenser configurations may only have one side of the dispenser configured for vapor recovery. For these dispensers, verify that the VP1000 does not change speed if the other side is authorized to dispense a fuel other than gasoline.
- To test the tightness of the vapor plumbing installed on the suction side of the system requires a 0-100" water column gauge. Connect the gauge into the 1/4" test port of the reducing tee. For the location of the test port, reference the dispenser views in Section 10. Continue by following and completing the START-UP / NEW INSTALLATION/ WARRANTY/ ANNUAL TESTING FORM.

# 8 Troubleshooting the VP1000

- Use extreme care and caution when performing the tests listed below. If 120 VAC is accidentally applied to the fault or DC terminals, the module will be destroyed.
- With power applied to the dispenser, but no products authorized, there should be 120 VAC between neutral and 120 VAC on the module terminal strip.
- As above, with any product authorized, there should be single speed power applied to the VP1000. Verify this by checking for 2-3 VDC from OUTPUT 1 (RED WIRE) to FAULT COMMON (ORANGE WIRE), (or from OUTPUT 2 TO FAULT COMMON) also; one GREEN LED should be illuminated. With a second product authorized on the opposite side of the dispenser *i.e.* one product on each side, the motor should operate at higher speed and there should be 2-3 VDC on both output 1 and 2 (to fault common) and both GREEN LED's should be illuminated.
- With the pump running, a fault can be simulated by shorting, with a jumper wire, the "FAULT INPUT" (purple wire) to FAULT COMMON (orange). This should cause the motor to shut off, the solenoid valves to lose power and the dispenser to shut down. Also, as long as the short is maintained, the red LED will be illuminated. Removing the short will not automatically reset the module. To reset the module, remove the short, remove power to the dispenser for twenty seconds and restore power. The module should now be reset and the red LED extinguished. This can also be accomplished by using the power reset (PWR RESET) on the module.
- If diagnosing a problem where the LED is already illuminated, a steady light indicates a low current condition, therefore expect a vane or rotor problem. If the LED is blinking, that indicates a high current condition and one would expect to find a jammed rotor or vapor line flooded with product. See Start-up/ New Installation/ Warranty/ Annual Testing Form.
- The electronics of the motor will make three attempts to have a successful start of the motor. If it detects a problem, on the fourth unsuccessful start, it will short the fault line to signal minus (DC-) and shut down the electronics.

**MC100 Interface Module**

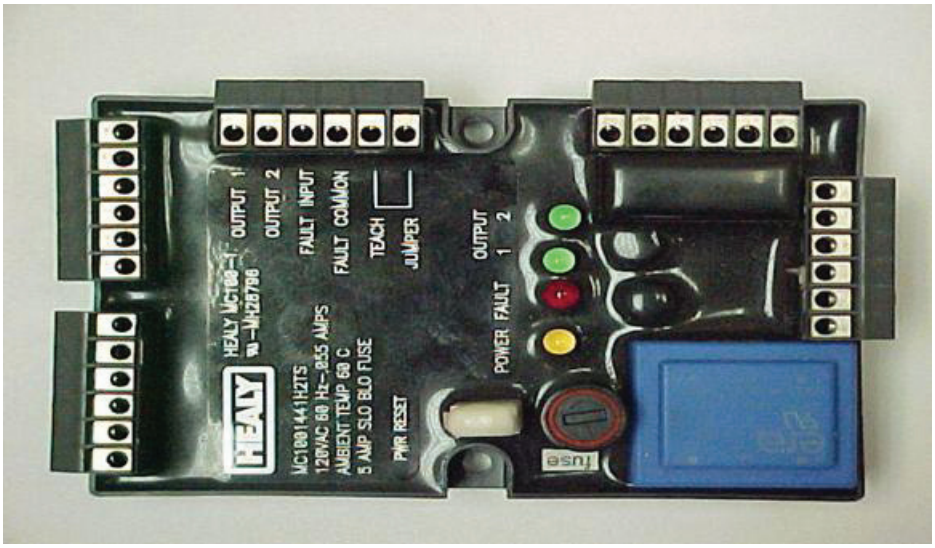

# 9 VP1000 Vane & Rotor Service & Replacement Guide

**Caution** **Disconnect power before beginning service.**

1. The work area **must** be clean and have sufficient lighting.
2. Disconnect the vapor piping connected to the **IN** and **OUT** ports of the VP1000 cover assembly.
3. Remove the four Allen head screws and lock washers that secure the pump cover assembly to the pump housing and remove the cover carefully.

**Caution** **Use a spill cloth when removing the cover, as there may be some gasoline inside the pump cavity**.

4. Carefully turn the rotor assembly by hand until the shaft key notch is at the 12 o'clock position. (See Figure 1)
5. Remove the rotor, vanes and shaft key from the pump housing.

**Note:** Place your hand or a container under the rotor while removing. Do not use any sharp objects that would scratch the surfaces of the pump cavity, pump shaft, rotor, or vanes.

6. Rotate the shaft by hand. If the shaft does not rotate freely, the entire vacuum pump needs replacement (p/n VP1000-5).
7. If the rotor and vanes are cracked, chipped, excessively worn or excessively dirty, the rotor and vanes should be replaced because cleaning will not remedy these conditions (p/n VP1000VRC or VP1000VRC-P).
8. If there is no visible damage, use a lint-free cloth with isopropyl alcohol to clean the rotor and vanes.
9. Using a lint-free cloth with isopropyl alcohol, thoroughly clean: the inside of the pump ring and rear of the pump cavity, the rotor shaft, and the inside of the pump cover.
10. Reposition the shaft (if necessary) so that the shaft key notch is in the 12 o'clock position. Install the cleaned original or new shaft key onto the shaft.
11. Carefully install the cleaned original or new rotor onto the shaft followed by the cleaned original or new vanes into the rotor.

**Note:** The rotor assembly should slide on to the shaft easily, without excessive force. (Rotors and vanes are reversible)

12. Lightly lubricate and install the new O-Ring for the pump housing.

**Note:** Do not allow any lubricant to get inside the pump housing.

13. Install the pump cover using the four Allen head screws and lock washers removed in step 3 and cross tighten.

**Note:** Use caution when sliding the pump cover over the O-Ring seal to prevent cutting or tearing.

14. Re-connect the vapor piping to the **IN** and **OUT** ports of the pump cover assembly that was removed in Step 2.
15. Re-apply power. Test for normal operation. (See VP1000 Vacuum Performance Test Procedure)

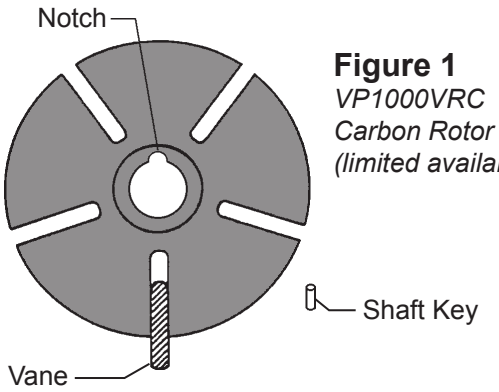


**Figure 1**
*VP1000VRC Carbon Rotor (limited availability)*

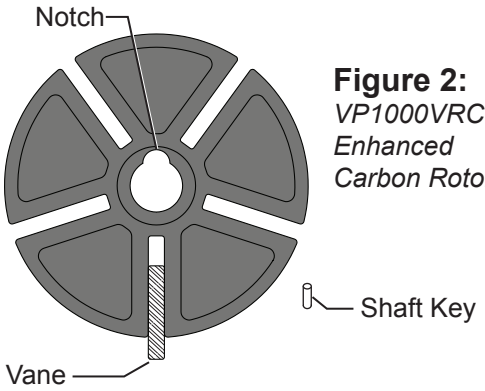


**Figure 2:**
*VP1000VRC-P Enhanced Carbon Rotor*

# 10 View of Dispensers

## 10.1 View of Reliance Dispenser (G6200 & G5200)

While the Twin II model is shown, the location of the Healy components for the Twin I and the Single are the same.

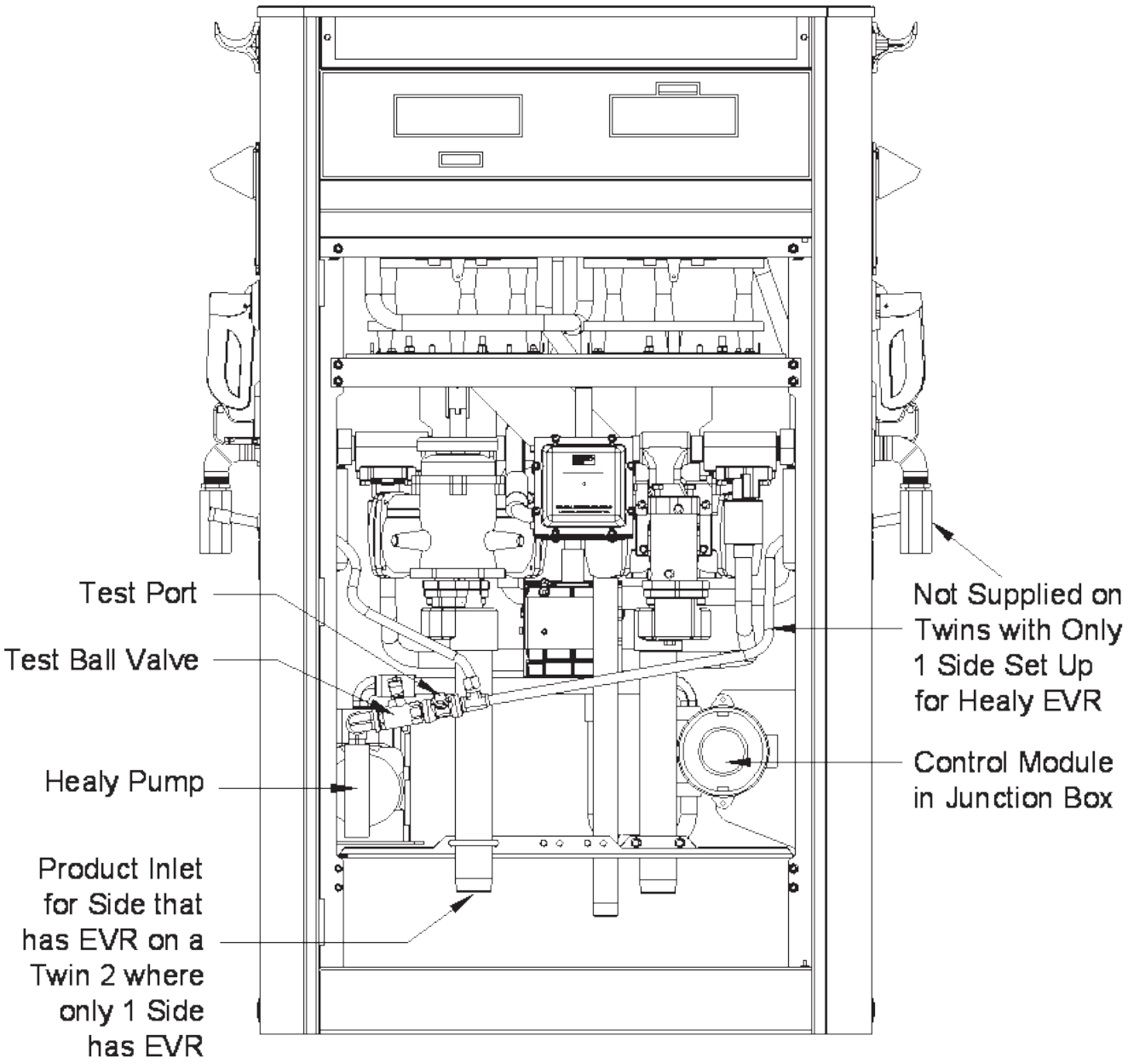

## 10.2 View of Select (3/G7200) & Century (3/G2200) Dispenser

While the Select Twin II model is shown, the location of the Healy components for all of the other Select & Century models are the same.

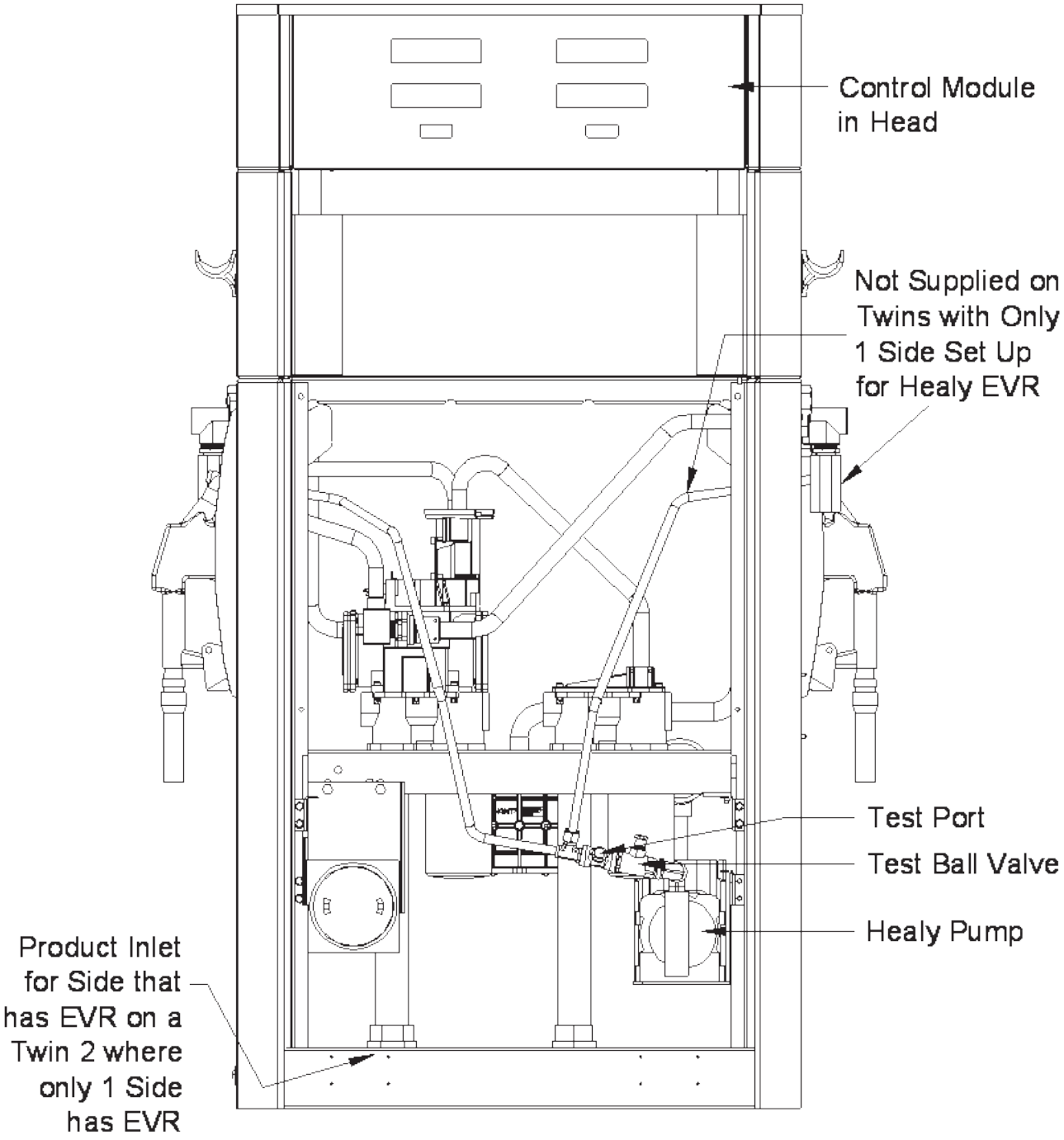

START-UP/NEW INSTALLATION/ WARRANTY/ ANNUAL TESTING FORM (Rev. 10/07)
HEALY VP1000 VACUUM PUMP

Date_____

**BOTH SIDES OF THIS TEST FORM MUST BE COMPLETED FOR NEW INSTALLATIONS**

- **Start-up / New installations – complete SIDE A and sections 3, 4, 5 and 6 of SIDE B. Submit forms to Healy Systems.**
- **Warranty Service or Annual Testing – complete contact information, dispenser make, vacuum pump serial # and the tests in sections 1 and 2 on SIDE A and conduct the appropriate tests specified on SIDE B. Submit Forms to Healy Systems.**

| | | |
|---|---|---|
| SERVICE COMPANY NAME | TELEPHONE | |
| SERVICE TECHNICIAN | HEALY TECH CERT # | |
| STATION ADDRESS | CITY | STATE |
| **DISPENSER MAKE** | **VACUUM PUMP SERIAL #** | |

# SIDE A

| **DISPENSER EQUIPMENT CHECKLIST - Parts A-1 and A-2** | | **YES** | **NO*** |
|---|---|---|---|
| **A-1** | Is all the installed dispenser hanging hardware listed in Exhibit 1 of Executive Order VR-201 or VR-202? | | |
| **A-2** | Proper installation of the VP1000 requires the test port and ball valve on the inlet side of the vacuum pump. Are the test port and ball valve installed correctly? | | |
| | ***If the answer to either A-1 or A-2 is NO, the Healy Warranty is Void.** | | |

## A-3

- THE FOLLOWING TEST WILL PERFORM A POSITIVE PRESSURE LEAK CHECK OF THE VACUUM PUMP, DISPENSER VAPOR PIPING, HANGING HARDWARE AND ALL NOZZLES ON BOTH SIDES OF THE DISPENSER.
- THE VP1000 OUTLET IS NOT CONNECTED TO UNDERGROUND PIPING DURING THIS TEST.

**CAUTION: REGULATE GASEOUS NITROGEN TO 2.5 PSI (~70" WC) MAXIMUM BEFORE TESTING**

1. Install a 0-100 inch water column (" wc) mechanical gauge at the VP1000 test port.
2. Use the water column gage positive (high) pressure port.
3. Gaseous nitrogen gas can now be connected to the outlet (exhaust) port of the VP1000.
4. Test pressure **cannot** exceed 70" wc.
5. **Slowly** introduce the gaseous nitrogen to a pressure between 60 – 70" wc.
6. After reaching the pressure range, close the valve supplying the gaseous nitrogen.
7. Record the initial pressure reading on the gauge - observe and record the final pressure reading after 60 seconds.
8. Leaks must be repaired when the pressure falls more than 4" wc in 60 seconds.
9. Retest until all leaks have been repaired.
10. Record test results in Section A-4.

| **A-4**<br>**PRESSURE TEST**<br>**2.5 PSI (~70"wc) Maximum** | **Initial Pressure test reading ("wc)** | **Pressure test reading after 60 seconds ("wc)** |
|---|---|---|

START-UP/NEW INSTALLATION/ WARRANTY/ ANNUAL TESTING FORM (Rev. 10/07)
HEALY VP1000 VACUUM PUMP

Date_____

**BOTH SIDES OF THIS TEST FORM MUST BE COMPLETED FOR NEW INSTALLATIONS**

- **Start-up / New installations – complete SIDE A and sections 3, 4, 5 and 6 of SIDE B. Submit forms to Healy Systems.**
- **Warranty Service or Annual Testing – complete contact information, dispenser make, vacuum pump serial # and the tests in sections 1 and 2 on SIDE A and conduct the appropriate tests specified on SIDE B. Submit Forms to Healy Systems.**

# SIDE B

| *Warranty Service*<br>Complete Troubleshooting Sections<br>**B-1 and B-2** | *Start-up/ New Installations/ Annual Testing*<br>Complete Sections<br>**B-3 through B-6** |
|---|---|

## B-1

**Control Module Fault Light**

**(Circle one) Flashing (LED) Steady (LED)**

1. All fault conditions require removal and cleaning or replacement of the rotor and vanes located inside the vacuum pumps round front cover assembly. Use the **VP1000 ROTOR & VANE SERVICE AND REPLACEMENT GUIDE** in the applicable dispenser retrofit manual of the ARB Approved Installation, Operation and Maintenance Manual for Executive Orders VR-201-K and VR-202-K.
2. Clean all surfaces including vanes, rotor, rotor housing and cover assembly.
3. Manually spin and inspect the motor shaft for bearing wear before re-installing the rotor kit.
4. Replace motor when bearings or shaft are damaged or worn.
5. Check O-ring seal before replacing rotor cover assembly.

## B-2

Re-Assemble / Reset Vacuum Pump and Module. (Power must be removed from both the vacuum pump and the **module for 20 seconds to reset the system**) using the power reset switch on the MC100 module.

## B-3

Dispenser Vapor Line Integrity Test

1. Install 0-100 inch water column (“ wc) vacuum mechanical gauge at the VP1000 test port.
2. Authorize the dispenser for fueling. The VP1000 will begin to run.
3. Close the ball valve at the pump inlet.
4. Record the initial vacuum reading on the gauge – observe and record the final vacuum reading after 60 seconds.
5. Open the ball valve at the pump inlet.
6. Leaks must be repaired when the vacuum reading falls more than 4” wc in 60 seconds.
7. Retest until all leaks have been repaired.
8. Record data in Section B-4.

**Note: If the initial vacuum reading is less than 60” wc, it could indicate a problem with the VP1000. Remove the dispenser from service. Use the troubleshooting section of the manual to investigate problem or contact the FFS Technical Help Desk at 800-984-6266 for assistance.**

## B-4

| VACUUM TEST Using VP1000 as vacuum source | Initial Vacuum test reading (“ wc) | Vacuum test reading after 60 sec. (“ wc) |
|---|---|---|

## B-5

Dispenser Vaacuum Test

With one side of the dispenser authorized (VP1000 running) and the ball valve at the pump inlet open, dispense in handheld position a minimum of 0.5 gallons of fuel into a vehicle or test tank. Record the vacuum level while dispensing. Repeat test for the other side of the dispenser.

1. Side “A” Dispensing Vacuum _____” wc
2. Side “B” Dispensing Vacuum _____” wc

**Note: If the dispensing vacuum is less than 60” wc, remove the dispenser from service. See the troubleshooting section of the manual or contact FFS Technical Help Desk at 800-984-6266 for assistance.**

## B-6

Audible Increase Test

Test the VP1000 Vacuum Pump for normal operation. Use the 6 step procedure titled, “Testing the VP1000 Vacuum Pump for normal operation using the following test procedure:” in Section 1.1 (Weekly Inspection and Testing) of the Healy Systems Scheduled Maintenance document in the ARB Approved Installation, Operation and Maintenance Manual for the Healy Phase II EVR System not Including ISD. This is to verify that the pump recognizes when both sides of the dispenser are activated for fueling.

Does the VP1000 Vacuum Pump change speeds (audible increase) when both sides are activated for fueling?

Yes No

If the answer is no, **use the troubleshooting section of the manual to investigate problem or contact the FFS Technical Help Desk at 800-984-6266 for assistance.**

| Repairs - Comments | To Obtain Returned Materials Authorization number (RMA#) Call 800-984-6266<br>Forms can be faxed to Franklin Fueling Systems Customer Service at 800-225-9787 |
|---|---|

# INSTALLATION & OPERATION MANUAL

Wayne
Healy Phase II
EVR System
(Assist)

For

Reliance G5200 Series

Reliance G6200 Series

Select 3/G7200 Series

Century 3/G2200 Series

Copyright ©2007 Dresser, Inc.
All rights reserved.
Printed in the United States of America.

The information in this publication is proprietary and confidential. No part of this publication may be electronically or mechanically reproduced, stored in a retrieval system, or transmitted, in any form or means, without express written permission by Dresser, Inc. Translation of this material to another language without express written permission by Dresser, Inc. is prohibited.

The information in this publication is for informational use only and is subject to change without notice. The contents should not be construed as a commitment by Dresser, Inc. who assumes no responsibility or liability for inaccuracies that may appear in this publication.

Wayne Division, Dresser, Inc. 3814 Jarrett Way, Austin, TX 78728 (512) 388-8311

©2007 Dresser, Inc.

HEALY

Franklin Fueling Systems

# Vapor Recovery Assist System

## Universal Manual

*VP1000*

This Universal Manual is to be used for new, replaced, retrofitted, or reconditioned dispensers/pumps that do not have a dispenser-specific installation manual listed in Franklin Fueling Systems Executive Order VR-201 or VR-202.

# Contents

**Important Safety Messages**

**Introduction**

**Description of Operation**
- Vacuum Pump Features

**Preparation**
- Parts List
  - VP1000 (A-K) Kit
    - VP1000 Kit Table
  - Electrical Kit Z070E (Universal)
  - Vapor Kit Z071V (Universal)
- Tools Required
  - Dispenser Access
  - Dispenser Survey
  - Before Mounting the Vacuum Pump

**Installing the VP1000 System**
- Mounting the Vacuum Pump & Electrical Conduit Assembly

**Installing the MC100 Control Module**
- Overview
- Mounting the MC100 Control Module

**Dispenser Specific Wire Harness Installation**
- AC Power to the module

**Generic Dispenser Wire Harness Installation - 1360A**
- A Side
- B Side

**1316 Potted Conduit Wiring**

**Installing Dispensing Hanging Hardware**
- Installing Dispensing Equipment
- Hose Adapters

**Testing the System**

**Troubleshooting the VP1000**

**VP1000 Vane & Rotor Service & Replacement Guide**

**Start-up/New Installation/Warranty/Annual Testing Form**

# Important Safety Messages

Franklin Fueling Systems (FFS)/Healy equipment is designed to be installed in association with volatile hydrocarbon liquids such as gasoline and diesel fuel. Installing or working on this equipment means working in an environment in which these highly flammable liquids may be present. Working in such a hazardous environment presents a risk of severe injury or death if these instructions and standard industry practices are not followed. Read and follow all instructions thoroughly before installing or working on this, or any other related, equipment.

As you read this guide, please be aware of the following symbols and their meanings:

**Warning** This symbol identifies a warning. A warning sign will appear in the text of this document when a potentially hazardous situation may arise if the instructions that follow are not adhered to closely. A potentially hazardous situation may involve the possibility of severe bodily harm or even death.

**Caution** This is a caution symbol. A caution sign will appear in the text of this document when a potentially hazardous environmental situation may arise if the instructions that follow are not adhered to closely. A potentially hazardous environmental situation may involve the leakage of fuel from equipment that could severely harm the environment.

**Warning** **Follow all applicable codes governing the installation and servicing of this product and the entire system. Always lock out and tag electrical circuit breakers while installing or servicing this equipment and any related equipment. A potentially lethal electrical shock hazard and the possibility of an explosion or fire from a spark can result if the electrical circuit breakers are accidentally turned on during installation or servicing. Please refer to the Installation and Owner's Manual for this equipment, and the appropriate documentation for any other related equipment, for complete installation and safety information.**

**Warning** **Follow all federal, state and local laws governing the installation of this product and its associated systems. When no other regulations apply, follow NFPA codes 30A and 70 from the National Fire Protection Association. Failure to follow these codes could result in severe injury, death, serious property damage and/or environmental contamination.**

**Warning** **Always secure the work area from moving vehicles. The equipment in this manual is usually mounted underground, so reduced visibility puts service personnel working on this equipment in danger from moving vehicles entering the work area. To help eliminate these unsafe conditions, secure the area by using a service truck to block access to the work environment, or by using any other reasonable means available to ensure the safety of service personnel.**

**Warning** **Use circuit breakers for multiple disconnect to turn off power and prevent feedback from other dispensers.**

# Introduction

This procedure describes the tools, methods and skill levels required to install a Healy Systems, Inc. Model VP1000 Vapor Recovery Pump in new, replaced, retrofitted, or reconditioned dispensers that do not have a dispenser specific installation manual listed in Franklin Fueling Systems Executive Order VR-201 or VR-202. Only Healy trained and certified contractors may perform these retrofits or the warranty will be voided. The installer must also be a skilled petroleum technician and thoroughly familiar with the State, Federal and local code requirements for the installation and repair of gasoline dispensing equipment. In addition, they shall be aware of all the necessary safety precautions and site safety requirements in order to assure a safe, trouble-free installation.

**Note:** Installations of vapor piping into the inlet side of the vacuum pump should be sloped such that the natural flow direction is toward the vacuum pump. However, it is permissible to have a piping slope tilted away from the vacuum pump provided that all other applicable tests (Dispenser integrity and V/L) meet the specifications outlined in the appropriate section of the Executive Order and ***ARB Approved Installation, Operation and Maintenance Manual***.

**Note:** For installations with In-Station Diagnostics (ISD), the vapor flow meter shall be installed on the down stream side of the vacuum pump. Every effort shall be made to install the vapor flow meter so that vapor piping between the vacuum pump and the vapor flow meter is sloped such that the natural flow direction is toward the vapor flow meter. However, it is permissible to have the piping slope away from the vapor flow meter provided that all other applicable tests (Dispenser integrity, V/L and ISD Operability) meet the specifications outlined in the appropriate section of the Executive Order and ***ARB Approved Installation, Operation and Maintenance Manual***.

# Description of Operation

The Healy Systems VP1000 Vacuum Pump is typically mounted in the lower hydraulic area of a dispenser or self-contained gasoline pump. It works as a component of a complete Stage II system which also includes a single universal control module and Healy Systems hanging hardware. It is intended for use by either OEM dispenser / pump manufactures or as an aftermarket retrofit to make existing equipment compatible with Healy Systems technology.

**Specifications: 1/8 Hp, 120 VAC input, 2 Amp AC**

**Important: All electrical and hydraulic plumbing fittings referred to in these instructions must be UL "listed" or "recognized" for the purpose.**

**Important: The VP1000 will increase the current draw of the dispenser by two amps. Use the label supplied to note this change.**

The preferred mounting position of the VP1000 Vacuum Pump is with the vacuum pump inlet and electrical connections facing upwards, towards the top of the dispenser (see Figure 1 below). If other mounting positions are desired because of mechanical constraints within the dispenser, please contact FFS Technical Services at 1-800-984-6266.

**Nozzle & Hanging Hardware** **MC100 Control Module** **VP1000 & Bracket**

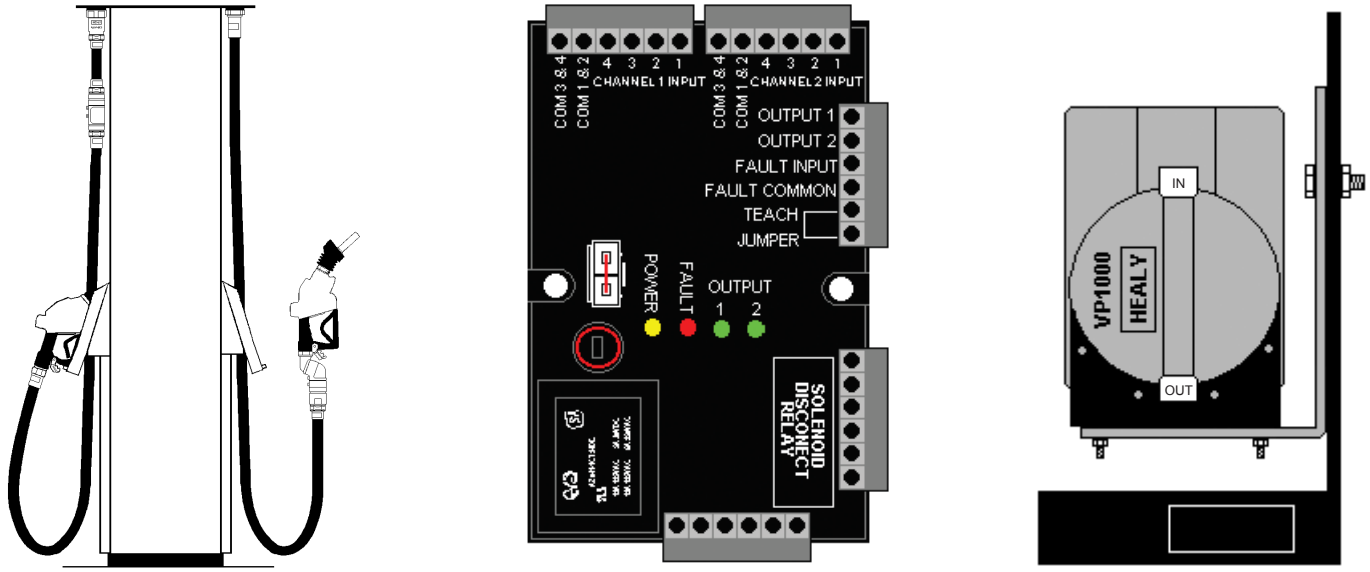


**Figure 1**

## Vacuum Pump Features

- Operates at two speeds: Low Speed in response to one fueling point being activated, or High Speed if both fueling points are activated simultaneously.
- Contains performance protection devices that will shut off the vacuum pump and disable dispensing if the vacuum pump is not operating properly.
- Operates only with input signals from the control module, cannot be operated 'stand alone'.
- Contains low temperature activation circuits that turn the vacuum pump on at slow speed when the temperature drops below 40°F to prevent freezing.

# Preparation

## Parts List

This section illustrates the basic components needed to retrofit a VP1000 Vacuum Pump into any new, replaced, retrofitted, or reconditioned dispenser. This system can be installed in any “Non-Vapor or Vapor Ready” dispenser including dispensers with existing “Balance” or “VacAssist” piping. Three kits are required for complete retrofit installations: VP1000, Vapor, and Electrical. Other supplies beyond the three kits may also be needed to complete your installation (i.e. electrical nipples and, possibly, additional vapor connections).

Assorted lengths of “UL Listed” electrical nipples as well as pipe or electrical elbows and couplings will be required to complete vacuum pump installation.

### VP1000 (A-J) Kit

| Part | Quantity |
|---|---|
| MC100 Control Module | 1 |
| Wire Harness | 1 |
| VP1000 Vacuum Pump | 1 |
| Mounting Bracket with Hardware | 1 |

**Note:** Universal Vapor & Electrical Kits must be ordered separately.

**Figure 2**

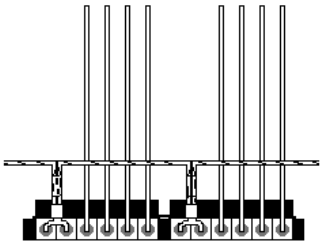

**Universal Wire Harness**

← OR →

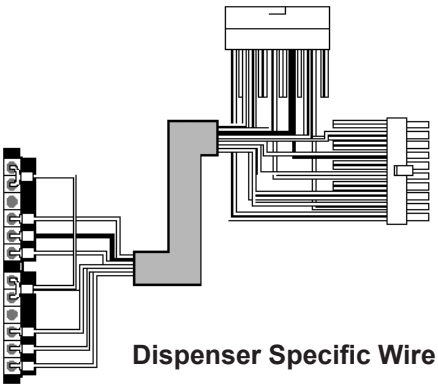

**Dispenser Specific Wire Harness**

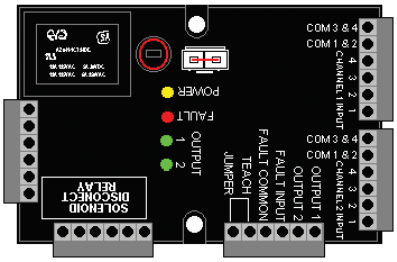


**MC100 Control Module**

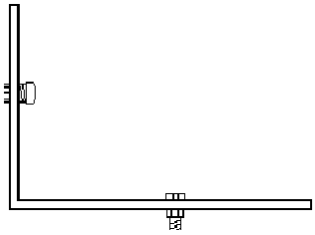

**Mounting Bracket & Hardware**

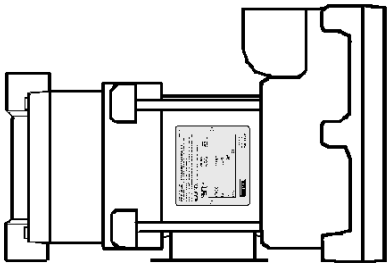

**VP1000 Vacuum Pump**

### VP1000 Kit Table

| Order Kit # | Description | Wire Harness |
|---|---|---|
| **VP1000A** | This Universal Wire Harness can be installed in any dispenser make or model. For use with any VAC or VDC Solenoid Valves. | 1360 |
| **VP1000D** | Early Gilbarco Encore 300 Blender Dispensers – 120 VAC Valves (manufactured before May 2003) | 1368 |
| **VP1000G** | Wayne & DL Non-Blender Dispensers – 120 VAC Valves | 1354 |
| **VP1000H** | Tokheim Premier C Blender Dispensers – 24 VDC Valves | 1362 |
| **VP1000J** | Early Tokheim Blender Dispensers – Combination 120 VAC & 24 VDC Valves | 1372 |

**Important: The VP1000 Kits listed above contain a specialized wire harness connection for each specific dispenser listed. All other components are identical and interchangeable.**

## Electrical Kit Z070E (Universal)

| Part | Quantity |
|---|---|
| Explosion Proof Junction Box | 1 |
| Capped 90° Elbow | 1 |
| 1/2" Union | 1 |
| Potted Conduit Nipple | 1 |
| 1/2" x 3/4" Reducing Bushing | 1 |
| 3/4" Coupling | 1 |
| 3/4" Close Nipple | 1 |
| Electrical Current Change Label (p/n 1405) | 1 |
| Electrical Wire Nuts | 12 |
| Scotchlok® Wire Connectors | 18 |

**Figure 3**

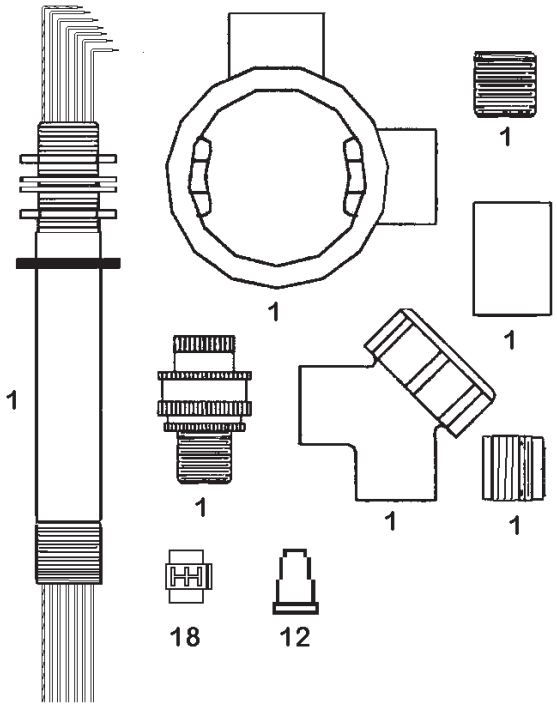


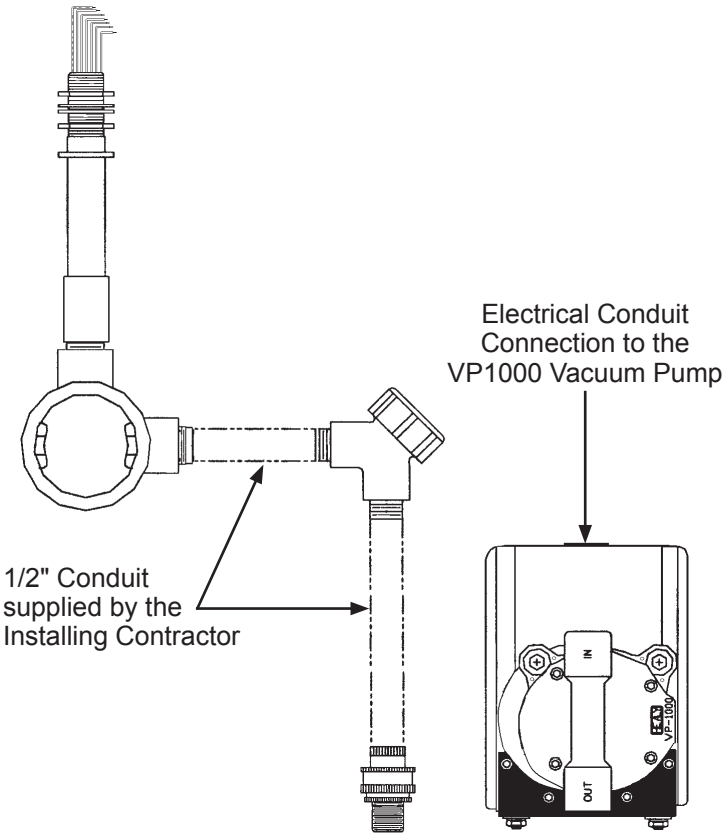


**Figure 4**

Example - Universal Electrical Kit Z070E

## Vapor Kit Z071V (Universal)

| Part | Quantity |
|---|---|
| 12' Length type “L” Copper Tubing | 1 |
| 1/2" Ball Valve | 1 |
| 1/2" x 1/4" x 1/2" NPT Tee | 1 |
| 1/4" NPT Hex Pipe Plug | 1 |
| 1x1/2" NPT Reducing Bell | 1 |
| 1x1/2" NPT Reducing Bushing | 1 |
| 5/8" Flare Tee | 1 |
| 1/2" NPT Street Elbow | 1 |
| Sheet Metal Screw | 1 |
| Cushioned Hold Strap | 1 |
| 3/4"x1/2" NPT Bushing | 2 |
| 1/2" NPT Close Nipple | 3 |
| 1/2" NPT x 5/8" Flare Elbow | 4 |
| 1/2" NPT x 5/8" Flare Straight | 5 |
| 5/8" Flare Nut | 8 |

## Figure 5

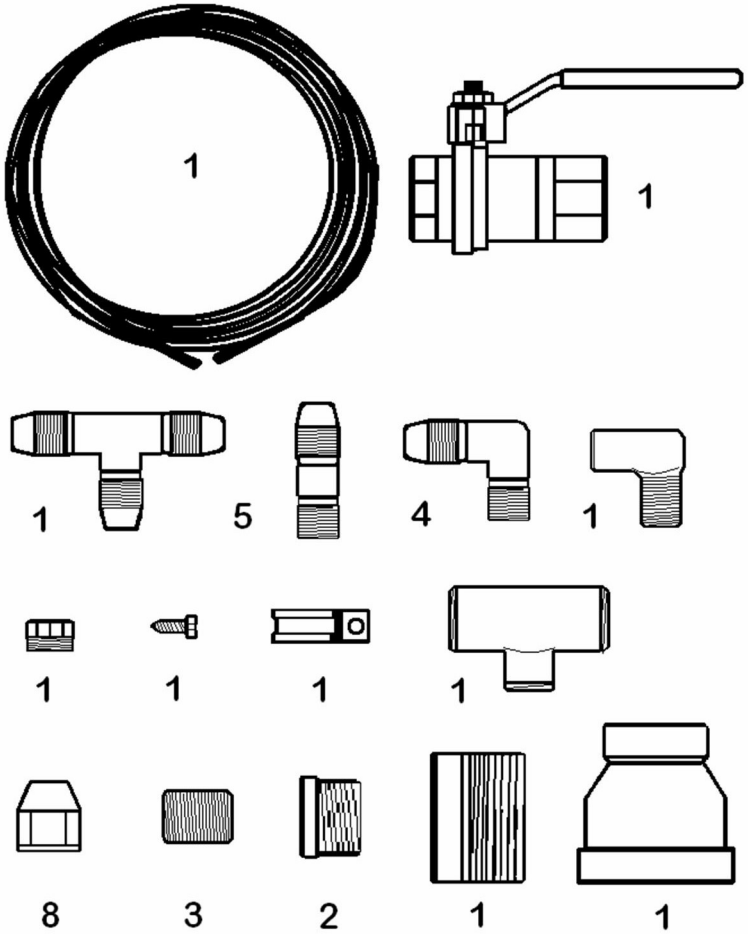


## Figure 6

Example - Universal Vapor Piping Inlet / Outlet Configurations

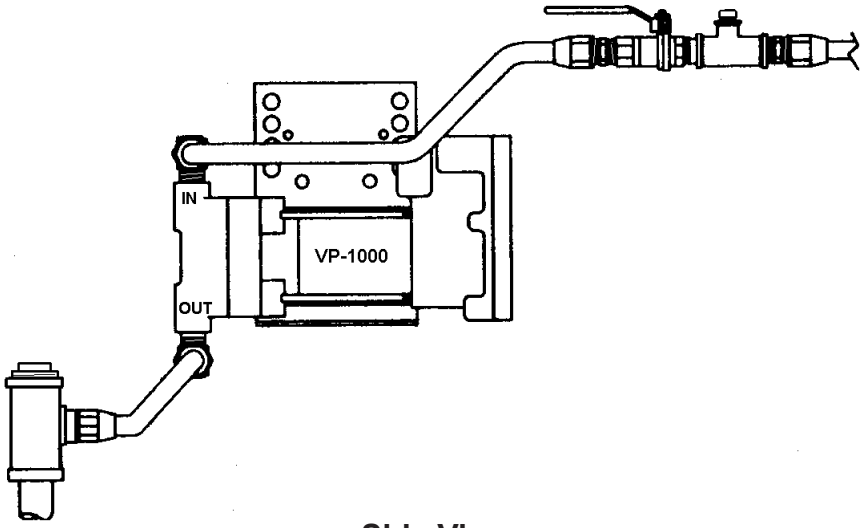


**Side View**

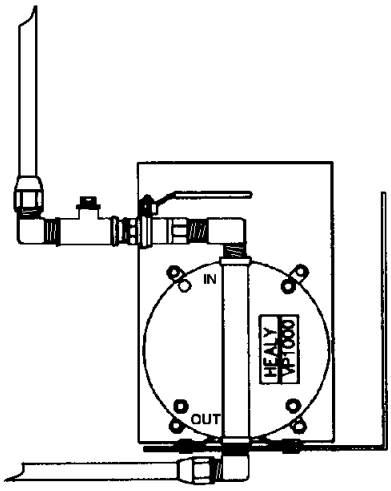


**Front View**

- VP1000 inlet and outlet piping/tubing can be installed in many different configurations to adapt to the available space within a dispenser/pump.
- Inlet piping must contain a test port and ball valve in the order shown above.
- Use Teflon tape on all threaded vapor connections for both the inlet and outlet ports of the VP1000 vacuum pump. NO PIPE DOPE ALLOWED.
- Both Inlet and Outlet Piping requires the use of 5/8" O.D. “Type L” copper tubing in combination with ½" NPT x 5/8" Flare Fittings when connecting to existing dispenser vapor piping. NO COMPRESSION FITTINGS ALLOWED.
- Additional connectors or fittings may be required to adapt to the original dispenser piping.

## Tools Required

- 0-100" Water Column Vacuum Gauge
- 9" Lineman's Pliers
- Assorted Open End Wrenches 1/4" through 3/4"
- Assorted Allen Wrenches
- Wire Cutters/Strippers 18 AWG and 26 AWG
- 3/8" Drill Assembly
- Assorted Drill Bits 1/16" through 7/16"
- 1/2" (5/8" O.D.) Copper Tube Bending Tool
- 1/2" (5/8" O.D.) Copper Flaring Tool
- Assorted Screwdrivers (Flat blade-one must be 1/8" wide)
- 1 1/8" Sheet Metal Hole Punch (for Potted Conduit Assembly)
- Copper Tubing Cutter
- Electrical Multi-meter
- 12" adjustable Wrench
- 18" Channel lock Pliers
- (2) 18" Pipe Wrench
- Hand Pipe Threader (for up to 1" pipe)
- Pipe Cutter (for up to 1" pipe)
- Tape Measure
- Teflon Tape
- Thread Sealing Compound
- 1/2" or 3/8" Ratchet set w/Sockets 1/4" through 9/16" + 3" Extension

### Dispenser Access

- Secure dispenser access keys from station management.
- Lock-out and tag-out all electrical power to dispenser being modified.
- Remove dispenser panels and open doors as required for installation.

### Dispenser Survey

Close inspection of the dispenser is needed before any work begins. The survey should include the following observations:

- What vapor recovery system (if any) is currently installed – Balance or VAC Assist?
- Does the existing vapor piping have any obstructions inline such as solenoid valves or ball valves?
- The installer should take note of any possible obstructions that would effect the proper installation of the vacuum pump.

### Before Mounting the Vacuum Pump

- The vacuum pump inlet cover must be accessible for service.
- Allow spacing for inlet piping test port and ball valve.
- An unobstructed path for the installation of vapor tubing.
- Allow space for electrical conduit components.
- Access point for the potted conduit through the vapor barrier.

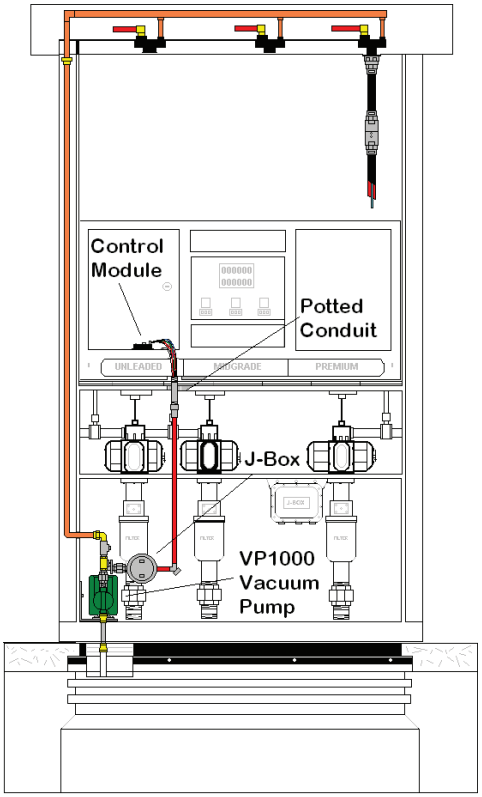


**Figure 7**

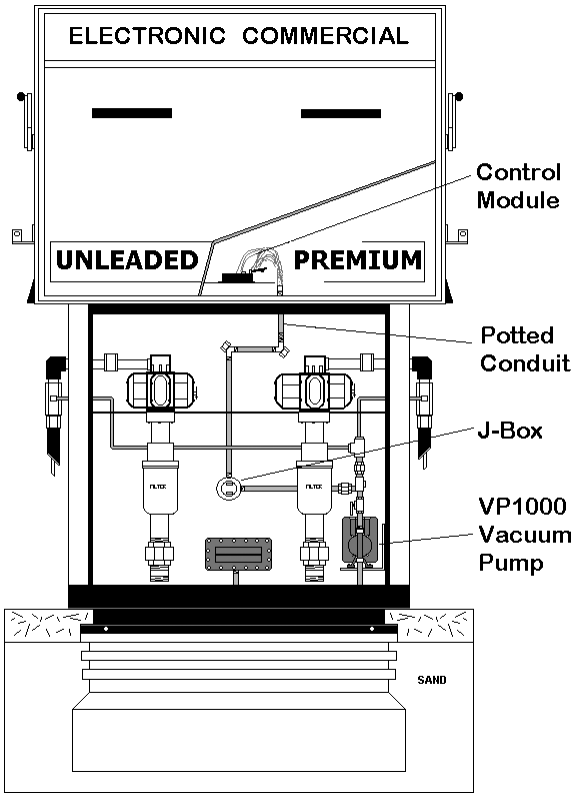

# Installing the VP1000 System

## Mounting the Vacuum Pump & Electrical Conduit Assembly

The VP1000 System must be installed by a Healy Certified Technician following all applicable federal, state and local codes & regulations.

**Warning** **Disable and tag-out all electrical feeds into the dispenser. No Electrical Power is allowed to the dispenser during the installation of the vacuum pump and control module.**

The recommended mounting position of the VP1000 vacuum pump is with the vacuum inlet and the electrical connection facing upwards towards the top of the dispenser.

- The vacuum pump's performance is not affected by the mounting location within a dispenser.
- The vacuum pump can be mounted at any location within the hazardous area of a dispenser if all applicable NFPA codes are followed.
- The installation must use "UL" approved electrical conduit, explosion-proof junction box and electrical union as required components connecting the VP1000 vacuum pump to the MC100 control module.
- For mechanical type dispensers the MC100 control module must be mounted in a dedicated "UL" listed explosion proof junction box.

The vacuum pump can be mounted on any solid surface or dispenser brace suitable to support the weight of the pump (32 lbs). The black steel bracket that is attached to the VP1000 Vacuum Pump can be removed and rotated (3 different mounting positions) so as to achieve the recommended mounting position of the pump as mentioned above. If additional support is needed, the use of the universal steel bracket supplied in each kit is recommended. Each VP1000 kit comes with enough hardware and fasteners to secure both brackets.

1. Begin the installation by mounting the vapor pump in the location pre-determined by the Dispenser Survey in the Preparation Section of this manual. Do not final tighten the mounting bolts at this time.
2. Install the Potted Conduit Assembly (PN# 1316) in the location pre-determined by your survey (Figure 8). The potted assembly is used for the electrical conduit transition from the hazardous area into the electronic area where the MC100 Control Module will be located.
3. The opening required through the vapor barrier for the potted assembly must be 1-1/8" in diameter. Installers can use a sheet metal punch to create the opening or use an existing "punch-out" if available.
4. Remove the top hex nut and washer from the potted conduit assembly. Guide the potted assembly through the "punch-out" then replace the washer and thread the hex nut back onto the assembly and hand-tighten the assembly into place. If the dispenser has dual vapor barriers, the rubber washer is installed on the top side of the lower deck. (See Figure 8)

**Figure 8**

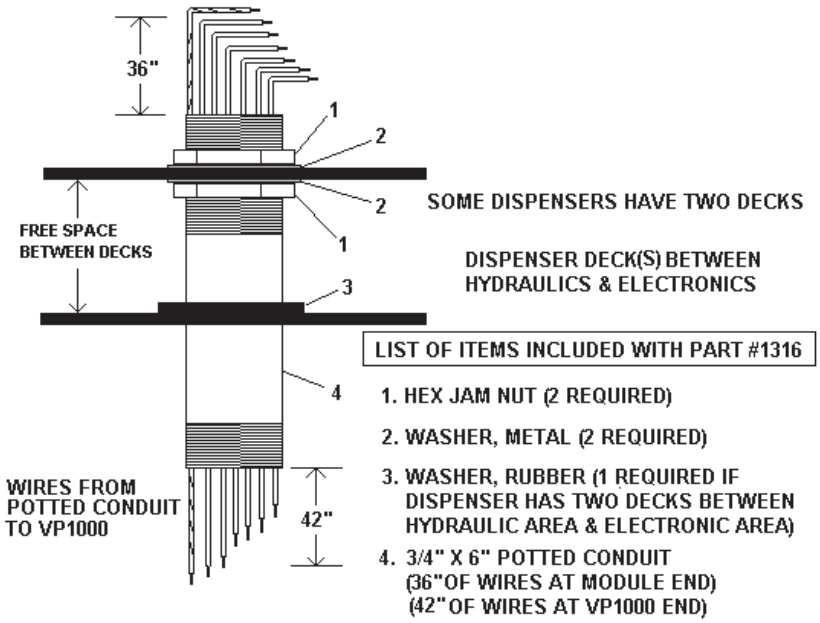


**Figure 9**

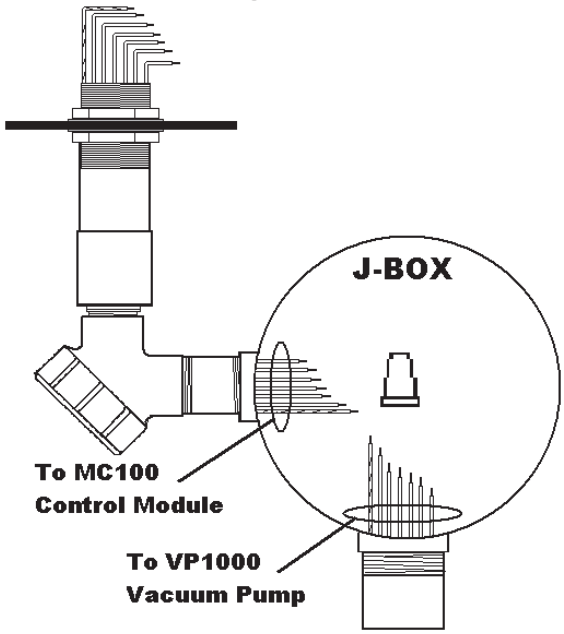

5. After the potted conduit and the VP1000 vacuum pump are in place (do not final tighten), you can begin to make up the electrical conduit that will connect the two components. Keep in mind that an electrical union and the explosion proof junction box must be installed between the two points.
6. Measure and select the proper size “UL” listed electrical nipples (not included). Feed the wiring from the potted conduit and the vacuum pump through the necessary electrical conduit components and nipples making sure that each piece is connected by a minimum of five threads. All electrical conduit connections must have at least five threads of engagement to be in compliance with the installation procedure.
7. Final tighten the mount for the VP1000 vacuum pump and also the hex locking nuts for the potted conduit assembly only after all the electrical conduit components have been correctly installed according to NFPA codes.
8. Pull the excess wire from the potted conduit and the vacuum pump through to the explosion proof junction box as required.
9. After the electrical conduit connections are completed and the wiring has been pulled into and through the explosion proof junction box the excess wire can be measured and cut. The length of the wires should allow for stripping and a wire nut connection for each wire (approximately 6"). The wires from the potted conduit and the vacuum pump are color coded and should be connected like for like.

# Installing the MC100 Control Module

## Overview

The MC100 control module is universal to all Healy VP1000 installations. The unit can accept up to four individual signals from each side of the dispenser and is designed to perform these specific functions:

- To accept a constant 120 Volt AC power supply from the dispenser.
- To supply a constant 120 Volt AC power supply to the VP1000 vacuum pump.
- To receive a separate signal from each side of a dispenser for authorization to dispense. Solenoid valves are most commonly used but any signal of 5 volts or above (AC or DC) will be accepted by the MC100.
- To send a low volt DC signal to the VP1000 vacuum pump to begin operation and to send a second low volt DC signal if the dispenser has both sides authorized to dispense simultaneously.
- To disable the dispenser if the vacuum pump is not operating properly.

## Mounting the MC100 Control Module

The MC100 control module is mounted in the electronics area of the dispenser. If the dispenser is a mechanical type with no vapor barrier the module must be located in a suitable “UL listed” explosion proof J-box.

The mounting location must be easily accessible to a service technician. The control module contains diagnostic LED lights and a power reset needed to service the system.

1. Identify the wire harness / control module part number to be installed. (See the Dispenser Models section in this manual)
2. The MC100 Control Module must be mounted to the inner framework of the dispenser following all applicable installation codes.
3. The MC100 Control Module is used with all wire harnesses described in the Dispenser Models chapter in this manual.
   - The 1360A module / wire harness includes 3M ScotchLok wire connectors to interface with the dispensers existing solenoid wiring.
   - All other dispenser specific wire harnesses use mating plug connectors. (See the Dispenser Models chapter in this manual)

# Dispenser Specific Wire Harness Installation

1. Locate the solenoid valve control board used to supply power to the product solenoid valves.
2. Locate the plug connector or connectors that supply power or signals from the solenoid valve control board to the individual solenoid valves.
3. Remove the existing connection between the solenoid valve control board and the solenoid wire connecting plug(s).
4. Some dispensers will have separate solenoid valve connection points on the solenoid valve control board. The Healy control module wire harness for these dispensers will also be separated. Channel 1 input harness connects to the “A” side of the solenoid valve control board. Channel 2 input harness connects to the “B” side of the solenoid valve control board.
5. Plug the cable connector(s) from the Healy Control Module into the mating connector(s) located on the solenoid valve control board. Do not force the connection. The connector installed on the Healy Control Module should match the original connector removed from the solenoid valve control board.
6. The Healy wire harness is now connected at the solenoid valve control board. Be sure the plug connector(s) have properly locked into place ensuring a tight connection.
7. Plug the previously removed solenoid wire connecting plug(s) into the mating connection on the Healy control module wire harness. This step will complete the dispenser interface wiring to the Healy Module.

## AC Power to the module

1. The MC100 Module requires a constant 120vac - 2 amp power source from the dispenser. The power should be supplied from the main power strip or accessory connections capable of sustaining a 2 amp load.
2. Using a 3M ScotchLok supplied with the 1360A Module assembly, connect the factory installed black & white twisted pair on the MC100 Module to the black and white (power & neutral) from the main power source or accessory connection of the dispenser.

Shown below are the Dispenser Specific Interface Wire Harnesses listed in the Dispenser Models chapter of this manual.

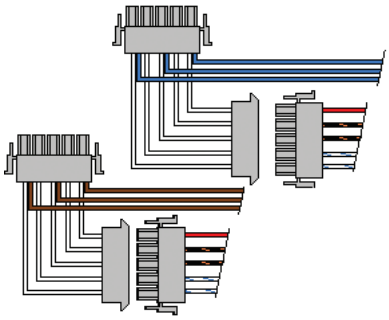

**1354 Wayne & DL Non-Blender**

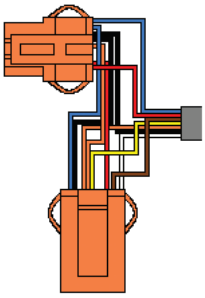

**1363 Wayne 1V & 2V Blender**

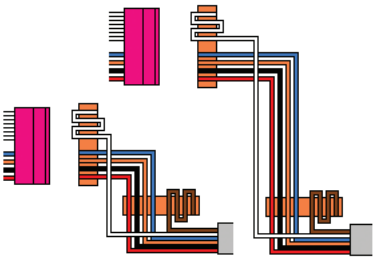

**1368 Early Gilbarco Encore 300 Blender**

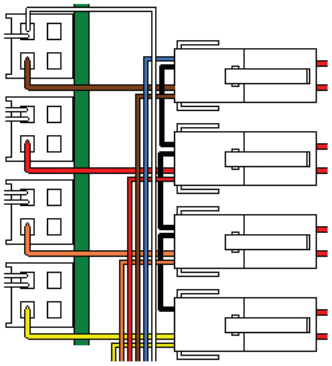

**1362 Tokheim Premier C Blender**

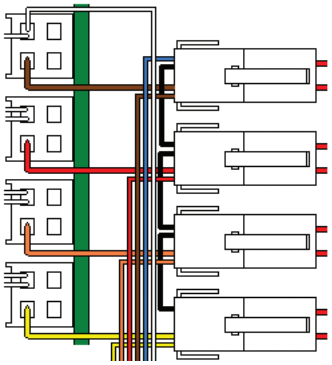

**1372 Early Tokheim Blender**

# Generic Dispenser Wire Harness Installation - 1360A

The 1360A Generic Wire Harness/Control Module is universal and can be installed in any dispenser or suction pump.

| Description | Quantity |
|---|---|
| MC100 Control Module | 1 |
| Wire Nuts Red | 4 |
| Wire Nuts Orange | 2 |
| ScotchLok Red | 13 |
| 12' Brown #16 Wire | 1 |
| 12' Blue #16 Wire | 1 |

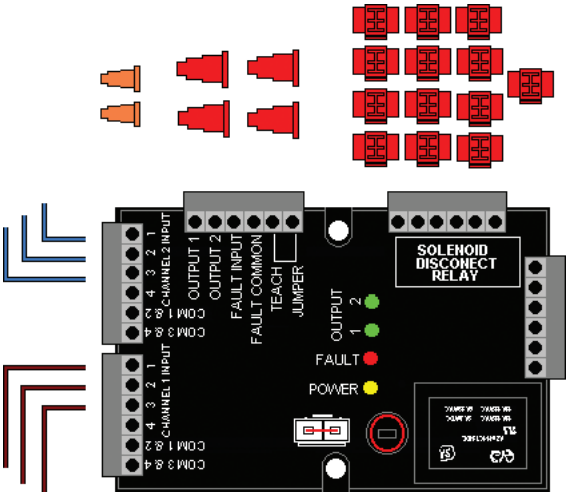


**Note:** Solenoid valves that supply diesel do not connect to the MC100 Control Module.

1. Locate the solenoid valve board that controls the signals (AC or DC) entering or exiting the product solenoid valves.
2. Locate the dispenser wire harness that carries the signals from the solenoid valve control to the individual solenoid valves on each side of the dispenser.

## A Side

3. Starting on the “A” side of the dispenser and using a multi-meter, determine which harness wire is carrying the voltage signal to the “A” side – grade 1 solenoid valve.
4. If a solenoid valve assembly has more than one signal wire, the signal wire that is first energized and remains energized throughout the fueling is labeled.
5. Each individual solenoid valve signal wire supplying the “A” side of the dispenser must be located and labeled; for example: A grade 1, A grade 2, A grade 3.
6. Loosely place a 3M ScotchLok onto the first signal wire (“A grade 1”) then measure and cut the appropriate length of blue wire supplied with the 1360A module assembly. One end of the blue wire is placed in the Scotchlok connector and fastened to the signal wire. The other end is stripped and placed into the Channel 1 Input / Position 1 of the MC100 Control Module.
7. Repeat Step 6 for the next solenoid valve and all remaining valves that supply the “A” side of the dispenser. Attach each of the “piggy-back” signal wires separately into the next available position(s) 2,3,4 on the Channel 1 Input side of the MC100 Module.

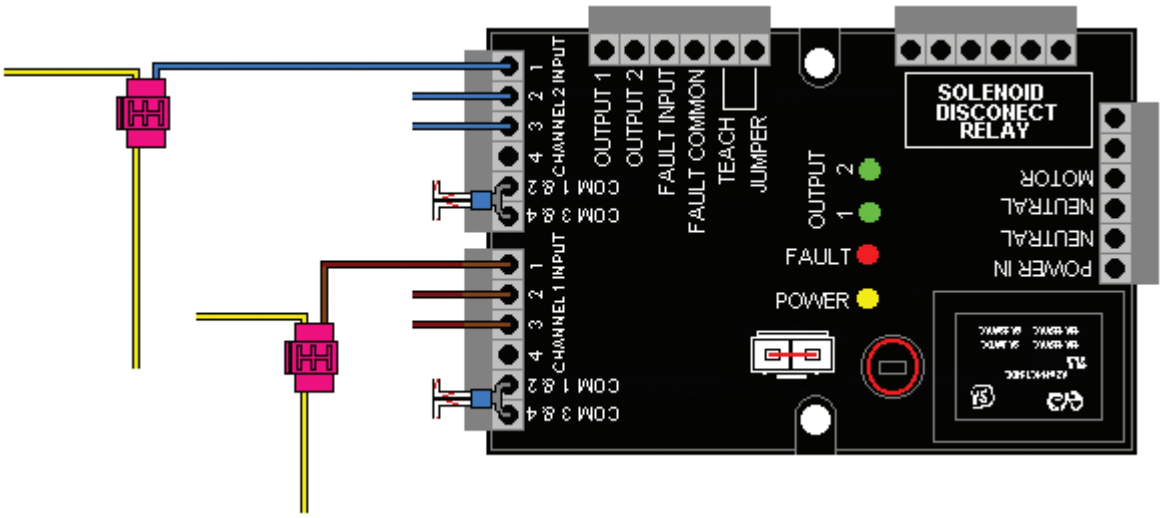


**Attaching the Voltage Signal Wire(s) to the MC100 Control Module**

## B Side

8. Repeat steps 3-7 for the “B” side solenoid valve signal wires using the Channel 2 Input side of the MC100 Module.
9. Each and every product solenoid valve supplying gasoline to the nozzles should have a voltage signal “piggy-back” wire installed terminating at the MC100 Module.
   - “A” side valves to Input CH 1 – 1,2,3,4
   - “B” side valves to Input CH 2 – 1,2,3,4

**Solenoid Disconnect Relay Wiring (1360A only)**

10. Factory installed on the 1360A module / harness, the red & white “jumper” wire has two separate wire leads and is attached at four locations on the module: CH 1 Com 1,2,3,4; CH 2 Com 1,2,3,4; and the “Solenoid Disconnect Relay” position 1 & 6.
11. The red & white “jumper” wire leads are connected to the neutral or common wiring for the solenoid valves. This jumper allows the module to reference the signal voltage from an authorized solenoid valve and also have the ability to disable the dispenser solenoids using the solenoid disconnect relay if the vacuum pump is not working properly.
12. To connect the jumper properly, locate the neutral or common wire that is associated with the control of the dispenser solenoid valves, this wire will be cut and each end separated and attached by a wire nut to the red & white “jumper” wire that has been factory installed on the MC100 Module.

**AC Power to the module**

13. The MC100 Module requires a constant 120vac - 2 amp power source from the dispenser. The power should be supplied from the main power strip or accessory connections capable of sustaining a 2 amp load.
14. Using a 3M ScotchLok supplied with the 1360A Module assembly, connect the factory installed black & white twisted pair on the MC100 Module to the black and white (power & neutral) from the main power strip or accessory connection of the dispenser.

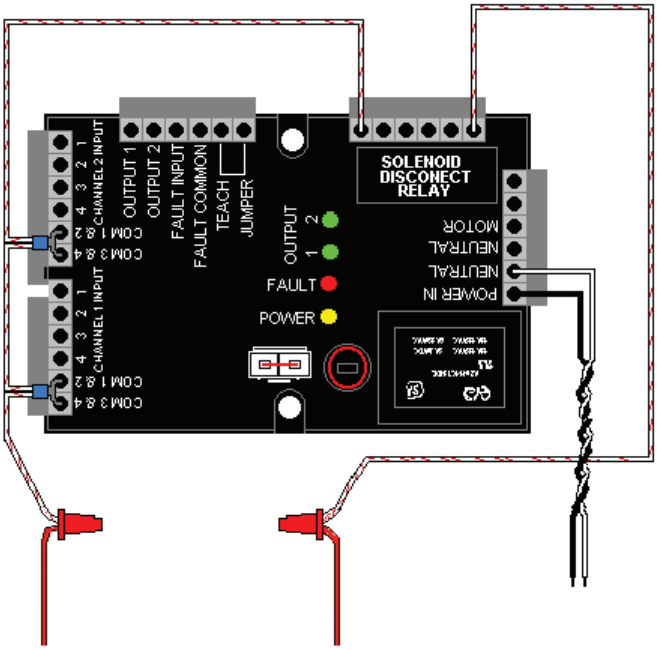


**Solenoid Valve Neutral Wire Interrupt**

**Note:** The neutral wire color (AC valves) will typically be red, but may be a different color depending on solenoid type.

# 1316 Potted Conduit Wiring

1. The power and signal wires that operate the VP1000 Vacuum Pump originate at the MC100 Control Module. These wires connect the module to the explosion proof junction box through the 1316 potted conduit assembly previously installed in the “Mounting the Vacuum Pump & Electrical Conduit Assembly” section of this manual.
2. Cut the wires from the 1316 potted conduit assembly an appropriate length to reach the MC100 Control Module terminal blocks, strip each wire end 1/2 inch.
3. Connect the low voltage (DC) signal wires:
   - Begin with one RED wire (either) and connect to OUTPUT 1 on the terminal block.
   - Connect the second RED wire to the OUTPUT 2 on the terminal block.
   - Connect the PURPLE wire to the FAULT INPUT on the terminal block.
   - Connect the ORANGE wire to the FAULT COMMON on the terminal block.
4. Connect the high voltage (AC) power wires:
   - Connect the WHITE wire to the NEUTRAL position on the AC terminal block.
   - Connect the BLACK wire to the MOTOR position on the AC terminal block.
   - Connect the GREEN/YELLOW wire to chassis ground.

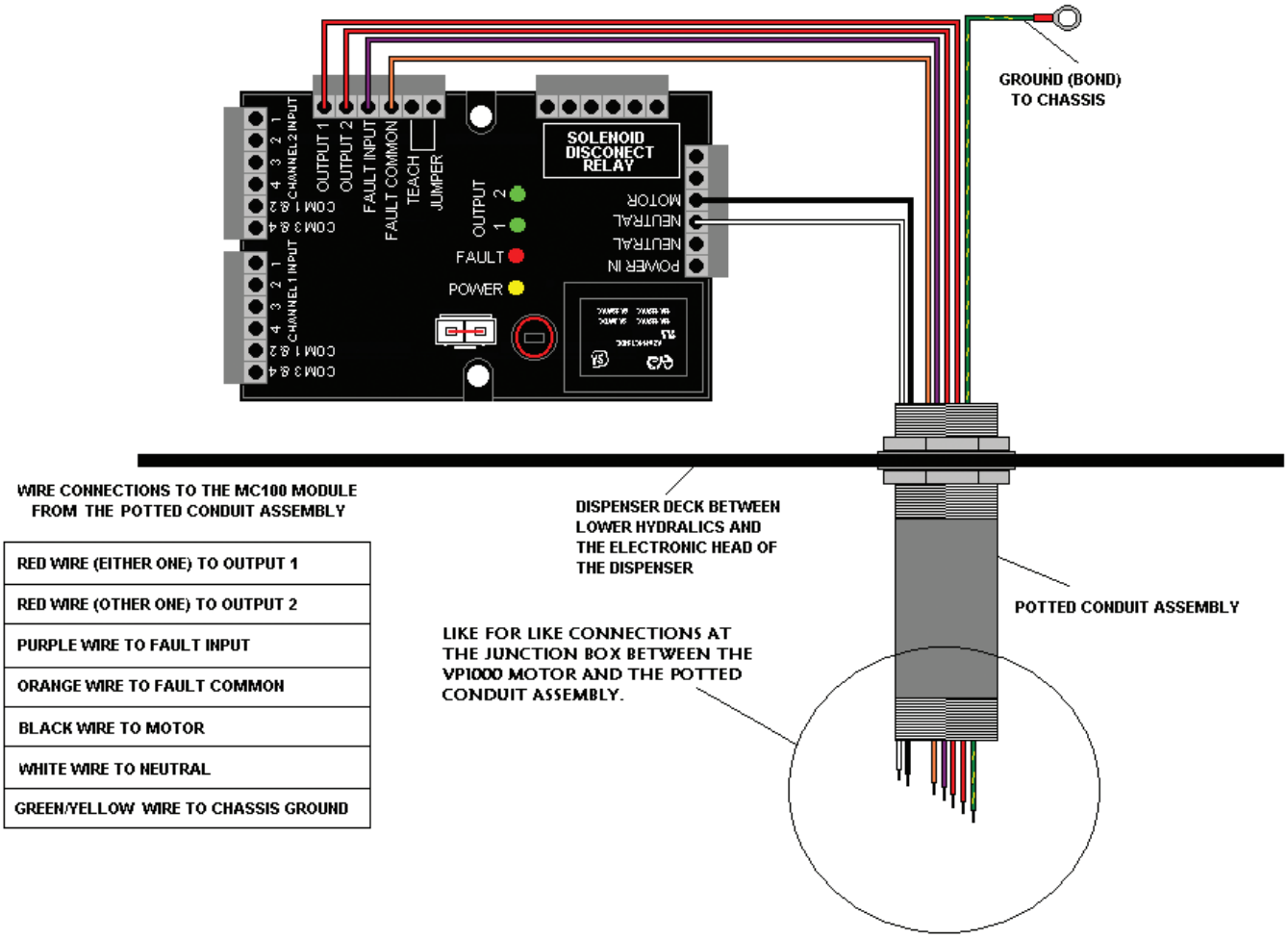


WIRE CONNECTIONS TO THE MC100 MODULE FROM THE POTTED CONDUIT ASSEMBLY

| |
|---|
| RED WIRE (EITHER ONE) TO OUTPUT 1 |
| RED WIRE (OTHER ONE) TO OUTPUT 2 |
| PURPLE WIRE TO FAULT INPUT |
| ORANGE WIRE TO FAULT COMMON |
| BLACK WIRE TO MOTOR |
| WHITE WIRE TO NEUTRAL |
| GREEN/YELLOW WIRE TO CHASSIS GROUND |

# Installing Dispensing Hanging Hardware

Dispensing Hanging Hardware is defined as the connecting point on a dispenser where the Healy System Hose Assembly or the Healy System Hose Adapter connects to the original dispenser product outlet.

## Installing Dispensing Equipment

1. Completing the connection of Healy Systems dispensing equipment requires the installation of Healy Systems Phase II dispenser adapters, hoses and nozzles (Hanging Hardware). So, if applicable, remove existing non-Healy hanging hardware (from the dispenser product outlet adapter to, and including, the nozzles).
2. Vapor ready dispensers will require a Healy Systems adapter to make the hose threads compatible with other Healy Systems equipment. Install the adapter according to the instructions that come with it. Various adapters are available, depending on how the dispenser is configured: M34 metric (Healy designation F3 or S3) or balance ready (Healy designation S4).
3. Healy Vapor Recovery Hoses are available in various lengths to satisfy local ordinances and still provide “far side” fueling capability. Install Healy Vapor Recovery Hoses according to the instructions contained with the product in the shipping box.
4. Breakaways are required; install either a model 8701VV Breakaway or a model 807 Swivel Breakaway. Install the breakaway using the instructions supplied with the unit.
5. The Healy Systems nozzle Model 900 (EVR) series is the only nozzle necessary to complete the upgrade. Check to be sure that the nozzle hanger is mounted in the highest position. Check for proper fit in the nozzle holster and that the nozzle can be locked in the off position. Also be sure that when the nozzle is locked, the dispenser cannot be activated from the locked position.

## Hose Adapters[1]

- Used for “Non-Vapor Ready” Commercial Dispensers Only (Universal)
- Dispensers containing existing “VacAssist” or “Balance” Stage II piping DO NOT use these adapters.

### CX6-A

Non-Vapor Ready, Standard Low Hose Dispensers

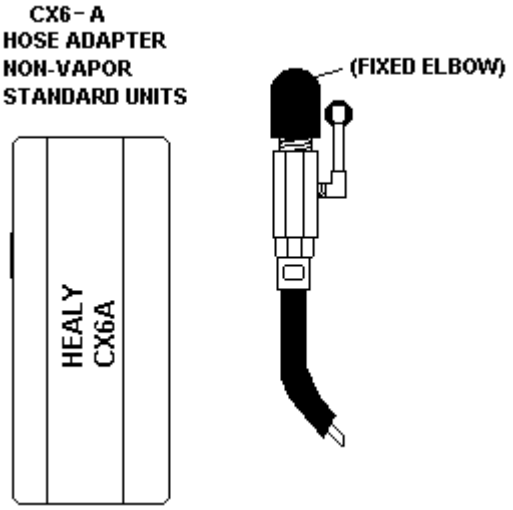


The Vapor Kits listed below are for use with CX6-A hose adapters

| Model | Description |
|---|---|
| Vapor Kit Z008 | Standard low hose / Single hose dispenser |
| Vapor Kit Z009 | Standard low hose / Dual hose dispenser |

[1] A complete list of dispenser conversion adaptors manufactured by Franklin Fueling Systems is listed in Exhibit 1. The use of dispenser conversion adaptors not listed in Exhibit 1 may be used to facilitate installation provided that all applicable performance standards are met.

# Testing the System

1. Carefully review all work completed, making sure that all mechanical joints are thoroughly tightened and that all electrical connections are sealed.
2. Open the product crash valves and restore power to the dispenser.
3. With the power on, but no nozzles authorized, the VP1000 should not be running (unless the ambient temperature is below 40°F), but the power LED (yellow) should be energized on the interface module.
4. Authorize one handle and the vacuum system should activate when the gasoline flow control valve is engaged. Repeat for all other nozzles, individually testing each nozzle on each side of dispenser. With each authorization, one of the green LED's on the interface module should illuminate and the VP1000 activate.

**Note:** For unihose dispensers, conduct individual tests for each product grade on each side of the dispener to ensure that the same LED activates for all grades on the same side. If the other LED activates, wiring needs to be corrected.

5. Authorize one nozzle and listen to the speed of the VP1000. With only one nozzle activated, the speed will be slower than if a nozzle on each side is activated. Activate a nozzle on the other side of the dispenser and listen for the speed to change.
6. To test the tightness of the vapor plumbing installed on the suction side of the system, use a 0-100" water column gauge. Connect the gauge into the 1/4" test port of the reducing tee. Activate the system by authorizing one side of the dispenser, (vacuum observed will vary from 70 to 100 inches W.C.), close the ball valve, and observe the vacuum gauge. If the gauge holds steady, the plumbing is tight. If the gauge falls quickly, expect to find leaks in the vapor plumbing. Repair as necessary.

# Troubleshooting the VP1000

**Important: Use extreme care and caution when performing the tests listed below. If 120 VAC is accidentally applied to the fault or DC terminals, the module will be destroyed.**

- With power applied to the dispenser, but no products authorized, there should be 120 VAC between neutral and 120 VAC on the module terminal strip.
- As above, with any product authorized, there should be single speed power applied to the VP1000.
  - Verify this by checking for 2-3 VDC from OUTPUT 1 (RED WIRE) to FAULT COMMON (ORANGE WIRE), (or from OUTPUT 2 TO FAULT COMMON) also; one GREEN LED should be illuminated. With a second product authorized on the opposite side of the dispenser i.e. one product on each side, the motor should operate at higher speed and there should be 2-3 VDC on both output 1 and 2 (to fault common) and both GREEN LED's should be illuminated.
- With the pump running, a fault can be simulated by shorting, with a jumper wire, the "FAULT INPUT" (purple wire) to FAULT COMMON (orange). This should cause the motor to shut off, the solenoid valves to lose power and the dispenser to shut down. As long as the short is maintained, the red LED will be illuminated. Removing the short will not automatically reset the module. To reset the module, remove the short, remove power to the dispenser for fifteen seconds and restore power. The switch (some models) or jumper plug on the module will also disconnect the power as long as it is held over or removed for 15 seconds, the module should be reset and the LED extinguished. If removing the jumper plug, be sure that there are no hazardous vapors present.
- If diagnosing a problem where the LED is already illuminated, a steady light indicates a low current condition, therefore expect a vane or rotor problem. If the LED is blinking, that indicates a high current condition and would expect to find a jammed rotor or vapor line flooded with product.
- The electronics of the motor will make three attempts to have a successful start of the motor. If it detects a problem, on the fourth unsuccessful start, it will short the fault line to signal minus (DC-) and shut down the electronics.

# VP1000 Vane & Rotor Service & Replacement Guide

**Caution** **Disconnect power before beginning service.**

1. The work area **must** be clean and have sufficient lighting.
2. Disconnect the vapor piping connected to the **IN** and **OUT** ports of the VP1000 cover assembly.
3. Remove the four Allen head screws and lock washers that secure the pump cover assembly to the pump housing and remove the cover carefully.

**Caution** **Use a spill cloth when removing the cover, as there may be some gasoline inside the pump cavity**.

4. Carefully turn the rotor assembly by hand until the shaft key notch is at the 12 o'clock position. (See Figure 1)
5. Remove the rotor, vanes and shaft key from the pump housing.

**Note:** Place your hand or a container under the rotor while removing. Do not use any sharp objects that would scratch the surfaces of the pump cavity, pump shaft, rotor, or vanes.

6. Rotate the shaft by hand. If the shaft does not rotate freely, the entire vacuum pump needs replacement (p/n VP1000-5).
7. If the rotor and vanes are cracked, chipped, excessively worn or excessively dirty, the rotor and vanes should be replaced because cleaning will not remedy these conditions (p/n VP1000VRC or VP1000VRC-P).
8. If there is no visible damage, use a lint-free cloth with isopropyl alcohol to clean the rotor and vanes.
9. Using a lint-free cloth with isopropyl alcohol, thoroughly clean: the inside of the pump ring and rear of the pump cavity, the rotor shaft, and the inside of the pump cover.
10. Reposition the shaft (if necessary) so that the shaft key notch is in the 12 o'clock position. Install the cleaned original or new shaft key onto the shaft.
11. Carefully install the cleaned original or new rotor onto the shaft followed by the cleaned original or new vanes into the rotor.

**Note:** The rotor assembly should slide on to the shaft easily, without excessive force. (Rotors and vanes are reversible)

12. Lightly lubricate and install the new O-Ring for the pump housing.

**Note:** Do not allow any lubricant to get inside the pump housing.

13. Install the pump cover using the four Allen head screws and lock washers removed in step 3 and cross tighten.

**Note:** Use caution when sliding the pump cover over the O-Ring seal to prevent cutting or tearing.

14. Re-connect the vapor piping to the **IN** and **OUT** ports of the pump cover assembly that was removed in Step 2.
15. Re-apply power. Test for normal operation. (See VP1000 Vacuum Performance Test Procedure)

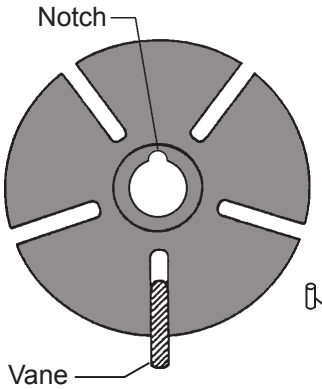


**Figure 1**
*VP1000VRC Carbon Rotor (limited availability)*

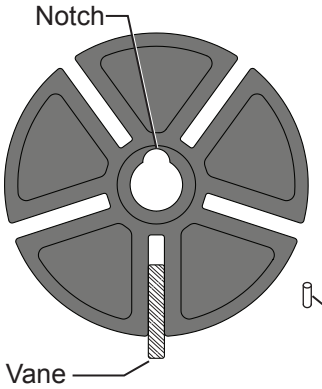


**Figure 2:**
*VP1000VRC-P Enhanced Carbon Rotor*

START-UP/NEW INSTALLATION/ WARRANTY/ ANNUAL TESTING FORM (Rev. 10/07)
HEALY VP1000 VACUUM PUMP

Date_____

**BOTH SIDES OF THIS TEST FORM MUST BE COMPLETED FOR NEW INSTALLATIONS**

- **Start-up / New installations – complete SIDE A and sections 3, 4, 5 and 6 of SIDE B. Submit forms to Healy Systems.**
- **Warranty Service or Annual Testing – complete contact information, dispenser make, vacuum pump serial # and the tests in sections 1 and 2 on SIDE A and conduct the appropriate tests specified on SIDE B. Submit Forms to Healy Systems.**

| | | |
|---|---|---|
| SERVICE COMPANY NAME | TELEPHONE | |
| SERVICE TECHNICIAN | HEALY TECH CERT # | |
| STATION ADDRESS | CITY | STATE |
| **DISPENSER MAKE** | **VACUUM PUMP SERIAL #** | |

# SIDE A

| **DISPENSER EQUIPMENT CHECKLIST - Parts A-1 and A-2** | | **YES** | **NO*** |
|---|---|---|---|
| **A-1** | Is all the installed dispenser hanging hardware listed in Exhibit 1 of Executive Order VR-201 or VR-202? | | |
| **A-2** | Proper installation of the VP1000 requires the test port and ball valve on the inlet side of the vacuum pump. Are the test port and ball valve installed correctly? | | |
| | ***If the answer to either A-1 or A-2 is NO, the Healy Warranty is Void.** | | |

## A-3

- THE FOLLOWING TEST WILL PERFORM A POSITIVE PRESSURE LEAK CHECK OF THE VACUUM PUMP, DISPENSER VAPOR PIPING, HANGING HARDWARE AND ALL NOZZLES ON BOTH SIDES OF THE DISPENSER.
- THE VP1000 OUTLET IS NOT CONNECTED TO UNDERGROUND PIPING DURING THIS TEST.

**CAUTION: REGULATE GASEOUS NITROGEN TO 2.5 PSI (~70" WC) MAXIMUM BEFORE TESTING**

1. Install a 0-100 inch water column (" wc) mechanical gauge at the VP1000 test port.
2. Use the water column gage positive (high) pressure port.
3. Gaseous nitrogen gas can now be connected to the outlet (exhaust) port of the VP1000.
4. Test pressure **cannot** exceed 70" wc.
5. **Slowly** introduce the gaseous nitrogen to a pressure between 60 – 70" wc.
6. After reaching the pressure range, close the valve supplying the gaseous nitrogen.
7. Record the initial pressure reading on the gauge - observe and record the final pressure reading after 60 seconds.
8. Leaks must be repaired when the pressure falls more than 4" wc in 60 seconds.
9. Retest until all leaks have been repaired.
10. Record test results in Section A-4.

| **A-4**<br>**PRESSURE TEST**<br>**2.5 PSI (~70"wc) Maximum** | **Initial Pressure test reading ("wc)** | **Pressure test reading after 60 seconds ("wc)** |
|---|---|---|

START-UP/NEW INSTALLATION/ WARRANTY/ ANNUAL TESTING FORM (Rev. 10/07)
HEALY VP1000 VACUUM PUMP

Date_____

**BOTH SIDES OF THIS TEST FORM MUST BE COMPLETED FOR NEW INSTALLATIONS**

- **Start-up / New installations – complete SIDE A and sections 3, 4, 5 and 6 of SIDE B. Submit forms to Healy Systems.**
- **Warranty Service or Annual Testing – complete contact information, dispenser make, vacuum pump serial # and the tests in sections 1 and 2 on SIDE A and conduct the appropriate tests specified on SIDE B. Submit Forms to Healy Systems.**

# SIDE B

| *Warranty Service*<br>Complete Troubleshooting Sections<br>**B-1 and B-2** | *Start-up/ New Installations/ Annual Testing*<br>Complete Sections<br>**B-3 through B-6** |
|---|---|

## B-1

**Control Module Fault Light**

**(Circle one) Flashing (LED) Steady (LED)**

1. All fault conditions require removal and cleaning or replacement of the rotor and vanes located inside the vacuum pumps round front cover assembly. Use the **VP1000 ROTOR & VANE SERVICE AND REPLACEMENT GUIDE** in the applicable dispenser retrofit manual of the ARB Approved Installation, Operation and Maintenance Manual for Executive Orders VR-201-K and VR-202-K.
2. Clean all surfaces including vanes, rotor, rotor housing and cover assembly.
3. Manually spin and inspect the motor shaft for bearing wear before re-installing the rotor kit.
4. Replace motor when bearings or shaft are damaged or worn.
5. Check O-ring seal before replacing rotor cover assembly.

## B-2

Re-Assemble / Reset Vacuum Pump and Module. (Power must be removed from both the vacuum pump and the **module for 20 seconds to reset the system**) using the power reset switch on the MC100 module.

## B-3

Dispenser Vapor Line Integrity Test

1. Install 0-100 inch water column (“ wc) vacuum mechanical gauge at the VP1000 test port.
2. Authorize the dispenser for fueling. The VP1000 will begin to run.
3. Close the ball valve at the pump inlet.
4. Record the initial vacuum reading on the gauge – observe and record the final vacuum reading after 60 seconds.
5. Open the ball valve at the pump inlet.
6. Leaks must be repaired when the vacuum reading falls more than 4” wc in 60 seconds.
7. Retest until all leaks have been repaired.
8. Record data in Section B-4.

**Note: If the initial vacuum reading is less than 60” wc, it could indicate a problem with the VP1000. Remove the dispenser from service. Use the troubleshooting section of the manual to investigate problem or contact the FFS Technical Help Desk at 800-984-6266 for assistance.**

## B-4

| VACUUM TEST Using VP1000 as vacuum source | Initial Vacuum test reading (“ wc) | Vacuum test reading after 60 sec. (“ wc) |
|---|---|---|
| | | |

## B-5

Dispenser Vaacuum Test

With one side of the dispenser authorized (VP1000 running) and the ball valve at the pump inlet open, dispense in handheld position a minimum of 0.5 gallons of fuel into a vehicle or test tank. Record the vacuum level while dispensing. Repeat test for the other side of the dispenser.

1. Side “A” Dispensing Vacuum _____” wc
2. Side “B” Dispensing Vacuum _____” wc

**Note: If the dispensing vacuum is less than 60” wc, remove the dispenser from service. See the troubleshooting section of the manual or contact FFS Technical Help Desk at 800-984-6266 for assistance.**

## B-6

Audible Increase Test

Test the VP1000 Vacuum Pump for normal operation. Use the 6 step procedure titled, “Testing the VP1000 Vacuum Pump for normal operation using the following test procedure:” in Section 1.1 (Weekly Inspection and Testing) of the Healy Systems Scheduled Maintenance document in the ARB Approved Installation, Operation and Maintenance Manual for the Healy Phase II EVR System not Including ISD. This is to verify that the pump recognizes when both sides of the dispenser are activated for fueling.

Does the VP1000 Vacuum Pump change speeds (audible increase) when both sides are activated for fueling?

Yes No

If the answer is no, **use the troubleshooting section of the manual to investigate problem or contact the FFS Technical Help Desk at 800-984-6266 for assistance.**

| Repairs - Comments | To Obtain Returned Materials Authorization number (RMA#) Call 800-984-6266<br>Forms can be faxed to Franklin Fueling Systems Customer Service at 800-225-9787 |
|---|---|

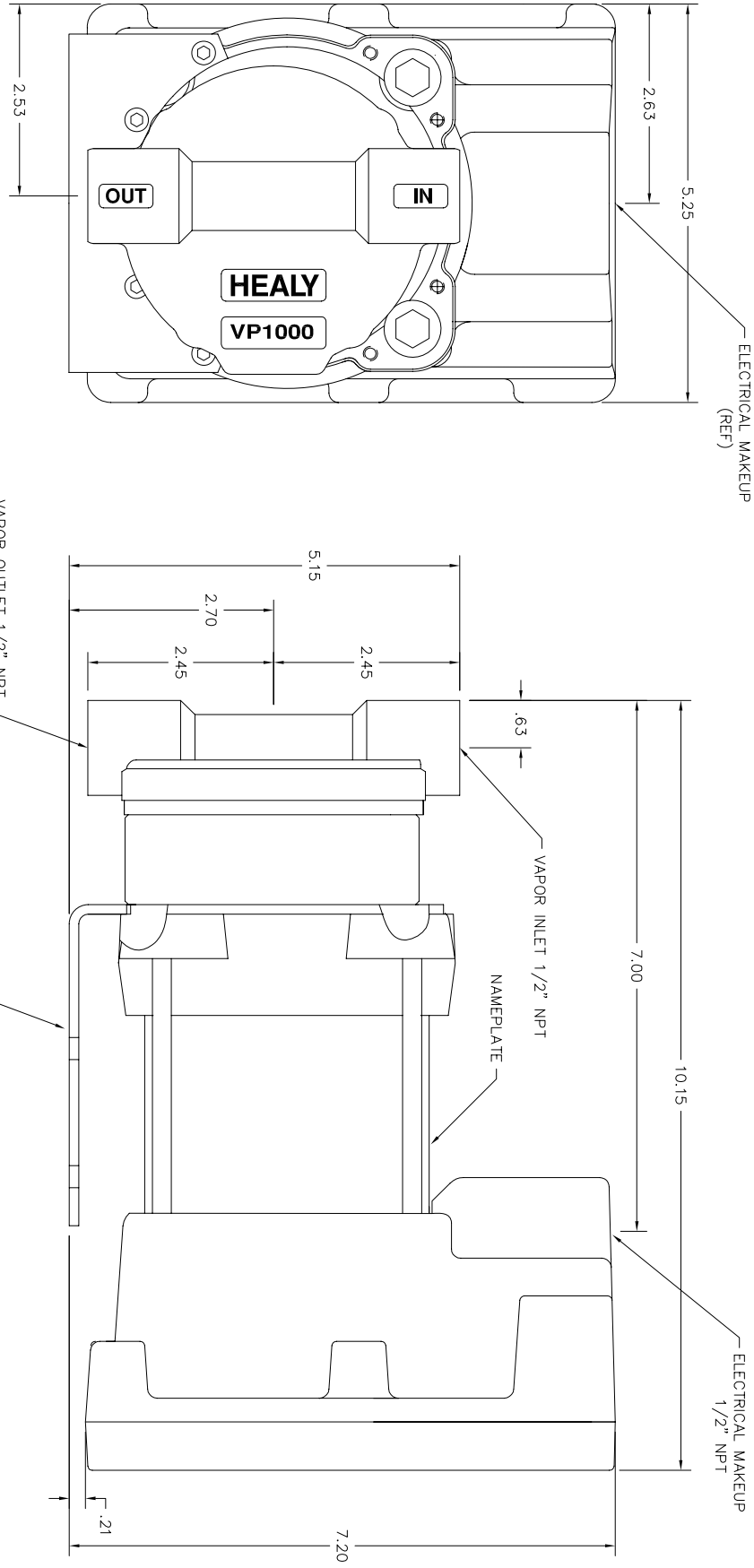


NOTE: ALL DIMENSIONS ARE APPROXIMATE AND REFERENCE ONLY.

HEALY
Franklin Fueling Systems
18 Hampshire Drive
Hudson, NH 03051, U.S.A.
Tel: +1 603 882-2472
www.franklinfueling.com