State of California
AIR RESOURCES BOARD

EXECUTIVE ORDER VR-201-M

Healy Phase II Enhanced Vapor Recovery (EVR) System
Not Including In-Station Diagnostics (ISD)

WHEREAS, the California Air Resources Board (ARB) has established, pursuant to California Health and Safety Code sections 25290.1.2, 39600, 39601 and 41954, certification procedures for systems designed for the control of gasoline vapor emissions during motor vehicle fueling operations (Phase II EVR vapor recovery systems) in its CP-201, ***Certification Procedure for Vapor Recovery Systems at Gasoline Dispensing Facilities*** (Certification Procedure) as last amended May 25, 2006, incorporated by reference in title 17, California Code of Regulations, section 94011;

WHEREAS, ARB has established, pursuant to California Health and Safety Code sections 39600, 39601, 39607, and 41954, test procedures for determining the compliance of Phase II vapor recovery systems with emission standards;

WHEREAS, Franklin Fueling Systems, Inc. (FFS) requested certification of the Healy Phase II Enhanced Vapor Recovery (EVR) System Not Including In-Station Diagnostics (ISD) (Healy Phase II EVR System) pursuant to the Certification Procedure on April 8, 2005 by Executive Order VR-201-A, and last modified on December 10, 2009, by Executive Order VR-201-L;

WHEREAS, the Certification Procedure provides that ARB Executive Officer shall issue an Executive Order if he or she determines that the vapor recovery system conforms to all of the applicable requirements set forth in the Certification Procedure;

WHEREAS, G-01-032 delegates to the Chief of the Monitoring and Laboratory Division the authority to certify or approve modifications to certified Phase I and Phase II vapor recovery systems for gasoline dispensing facilities; and

WHEREAS, I, Alberto Ayala, Chief of the Monitoring and Laboratory Division, find that the Healy Phase II EVR System, conforms with all requirements set forth in the Certification Procedure, including compatibility when fueling vehicles equipped with onboard refueling vapor recovery systems, and results in a vapor recovery system which is at least 95.0 percent efficient and does not exceed 0.38 pounds of hydrocarbons per 1,000 gallons of gasoline transferred when tested pursuant to TP-201.2, ***Efficiency and Emission Factor for Phase II Systems*** (May 2, 2008).

NOW, THEREFORE, IT IS HEREBY ORDERED that the Healy Phase II EVR System is certified to be at least 95 percent efficient and does not exceed 0.38 pounds of hydrocarbon per 1,000 gallons of gasoline transferred in attended and/or self-service mode when used with an ARB-certified Phase I vapor recovery system installed, operated, and maintained as specified herein and in the following exhibits. Exhibit 1 contains a list of the equipment certified for use with the Healy Phase II EVR System. Exhibit 2 contains the performance standards, specifications, typical installation drawings and maintenance intervals applicable to the Healy Phase II EVR System as installed in a gasoline dispensing facility (GDF). Exhibit 3 contains the manufacturing specifications. Exhibit 4 is the test procedure for verifying performance of the Healy Clean Air Separator. Exhibit 5 is the vapor to liquid ratio test procedure for verifying performance of the Healy 900 Nozzle. Exhibit 6 is the Healy Phase II EVR System Limited Warranty. Exhibit 7 is the nozzle bag test procedure. Exhibit 8 provides items required in conducting TP-201.3. Exhibit 9 is the procedure for verifying performance of the Liquid Condensate Trap.

IT IS FURTHER ORDERED that compliance with the applicable certification requirements, rules and regulations of the Division of Measurement Standards of the Department of Food and Agriculture, the Office of the State Fire Marshal of the Department of Forestry and Fire Protection, the Division of Occupational Safety and Health of the Department of Industrial Relations, and the Division of Water Quality of the State Water Resources Control Board are made conditions of this certification.

IT IS FURTHER ORDERED that FFS shall provide a warranty for the vapor recovery system and components to the initial purchaser. The warranty shall be passed on to each subsequent purchaser within the warranty period. The manufacturer of components listed in Exhibit 1 not manufactured by Healy Systems, Inc. shall provide a warranty to each of their components certified herein. The warranty shall include the ongoing compliance with all applicable performance standards and specifications and shall comply with all warranty requirements in Section 16.5 of the Certification Procedure. FFS or other manufacturers may specify that the warranty is contingent upon the use of trained installers.

IT IS FURTHER ORDERED that every certified component manufactured by FFS shall be performance tested by the manufacturer as provided in Exhibit 3.

IT IS FURTHER ORDERED that the certified Healy Phase II EVR System shall be installed, operated, and maintained in accordance with the ***ARB Approved Installation, Operation, and Maintenance Manual***. A copy of this Executive Order and the ***ARB Approved Installation, Operation and Maintenance Manual*** shall be maintained at each GDF where a certified Healy Phase II EVR System is installed.

IT IS FURTHER ORDERED that equipment listed in Exhibit 1, unless exempted, shall be clearly identified by a permanent identification showing the manufacturer's name and model number.

IT IS FURTHER ORDERED that any alteration in the equipment parts, design, installation, or operation of the system certified hereby is prohibited and deemed inconsistent with this certification, unless the alteration has been submitted in writing and approved in writing by the Executive Officer or Executive Officer delegate.

IT IS FURTHER ORDERED that the following requirements are made a condition of certification. The owner or operator of the Healy Phase II EVR System shall conduct and pass the following tests no later than 60 days after startup and at least once in each 12 month period, using the following test procedures:

- TP-201.3, ***Determination of 2 Inch WC Static Pressure Performance of Vapor Recovery Systems of Dispensing Facilities*** (March 17, 1999);
- Exhibit 8, ***Required Items in Conducting TP-201.3***;
- Exhibit 4, ***Determination of Static Pressure Performance of the Healy Clean Air Separator***;
- Exhibit 5, ***Vapor to Liquid Volume Ratio***; and
- Exhibit 9, ***Liquid Condensate Trap Compliance Test Procedure*** *(if applicable)*.

Local District at their option may specify the testing frequency and related sequencing of the above tests. Notification of testing, and submittal of test results, shall be done in accordance with local district requirements and pursuant to policies established by that district. Local districts may require the use of alternate test form(s), provided they include the same minimum parameters identified in the datasheet referenced in the test procedure(s). Alternative test procedures, including most recent versions of the test procedures listed above, may be used if determined by ARB Executive Officer or Executive Officer delegate, in writing, to yield equivalent results.

IT IS FURTHER ORDERED that the following requirements are made a condition of certification. The owner or operator of the Healy Phase II EVR System shall conduct, and pass, the following tests no later than 60 days after startup using Exhibit 7, ***Nozzle Bag Test Procedure***. TP-201.4, ***Dynamic Back Pressure*** (July 3, 2002) shall be conducted in accordance with the conditions listed in item 1 of the Vapor Recovery Piping Configurations section of Exhibit 2. Local districts have the authority to require conducting of Exhibit 5, ***Vapor to Liquid Volume Ratio***, in lieu of TP-201.4, ***Dynamic Back Pressure*** (July 3, 2002) provided that at least 2 gallons of product are introduced into the system through each dispenser riser prior to conducting the test. Notification of testing, and submittal of test results, shall be done in accordance with local district requirements and pursuant to the policies established by that district. Local districts may require the use of alternate test form(s), provided they include the same minimum parameters identified in the datasheet referenced in the test procedure(s). Alternative test procedures, including most recent versions of the test procedures listed above, may

be used if determined by ARB Executive Officer or Executive Officer delegate, in writing, to yield equivalent results.

IT IS FURTHER ORDERED that, except as provided above, local districts at their option will specify the testing, related sequencing, and testing frequency of the nozzle vapor valves. If nozzle vapor valve tests are required by the district, the test shall be conducted in accordance with Exhibit 7, ***Nozzle Bag Test Procedure***.

IT IS FURTHER ORDERED that the Healy Phase II EVR System shall be compatible with gasoline in common use in California at the time of certification. The Healy Phase II EVR System is not compatible with gasoline containing more than 15 percent methanol, 15 percent ethanol, or 15 percent methyl tertiary butyl ether (MTBE). Any modifications to comply with future California gasoline requirements shall be approved in writing by the Executive Officer or Executive Officer delegate.

IT IS FURTHER ORDERED that the certification of the Healy Phase II EVR System is valid through September 1, 2011 to provide more time for the Executive Officer or Executive Officer delegate to gather and evaluate information.

IT IS FURTHER ORDERED that Executive Order VR-201-L issued on December 10, 2009, is hereby superseded by this Executive Order. Healy Phase II EVR Systems certified under Executive Order VR-201-A through L may remain in use at existing installations. This Executive Order shall apply to new installations or major modification of Phase II Systems with a throughput of less than or equal to 600,000 gallons per year. A new installation or a major modification at a GDF with a throughput of more than 600,000 gallons per year is not authorized.

Executed at Sacramento, California, this 23 day of July 2010.

Cynthia L Castronovo
for Alberto Ayala, Ph.D., M.S.E.
Chief, Monitoring and Laboratory Division

Attachments:

| | |
|---|---|
| Exhibit 1 | Equipment List |
| Exhibit 2 | System Specifications |
| Exhibit 3 | Healy Manufacturing Performance Standards and Specifications |
| Exhibit 4 | Determination of Static Pressure Performance of the Healy Clean Air Separator |
| Exhibit 5 | Vapor to Liquid Volume Ratio |
| Exhibit 6 | Warranty |
| Exhibit 7 | Nozzle Bag Test Procedure |
| Exhibit 8 | Required Items in Conducting TP-201.3 |
| Exhibit 9 | Liquid Condensate Trap Compliance Test Procedure |

**Executive Order VR-201-M**
**Healy Phase II EVR System**
**Not Including ISD**

**Exhibit 1**
**Equipment List**

| Component | Manufacturer/Model |
|---|---|
| **Nozzle** | Healy Model 900[1]<br>(Figures 1A-1 and 1A-2) |
| **Clean Air Separator** | Healy Model 9961 Clean Air Separator<br>(Figures 1A-3 and 1A-4)<br>Healy Model 9961H Clean Air Separator<br>(Figures 1A-3H and 1A-6) |
| **Inverted Coaxial Hoses** | Healy Model 75 Series (3/4" I.D.)<br>(Figures 1A-5, 1A-8 and 1A-9)<br>75W-XXX-YZYZ<br>Where<br>W represents color of hose (varies)<br>Note: Product label will have an "X" in this position for all hose colors<br>XXX represents hose length<br>First two digits for length in feet<br>Last digit - length in tenths of foot<br>Note: Product label will have "XXX" in this position for hose length<br>Y represents hose end type<br>S = Swivel End<br>F = Fixed End<br>Z represents thread type<br>2 = Healy Straight Thread<br>3 = Metric Thread<br>4 = Balance-Type Thread |

[1] Nozzle can have either a two position or three position hold open clip (see Figure 1A-1).

| Component | Manufacturer / Model |
|---|---|
| **Dispenser Conversion Adaptors (Optional)[2]** | |
| | Healy Model CX6-A (Required on Gasboy, Global Century, Reliance and Select Dispensers)<br>Healy Model CX6-VV1A*<br>Healy Model CX6-VV2A*<br>Healy Model CX6-VV3A<br>EBW Model 303-301-01<br>(Figures 1A-9 and 1A-10)<br><br>Note: Items marked with asterisk (*) are no longer manufactured, but may be used for dispenser retrofit. |
| **Reconnectable Breakaway Coupling** | |
| | Healy Model 8701VV<br>(Figures 1A-11 and 1A-12)<br>Healy Model 807 Swivel<br>(Figures 1A-13 and 1A-14) |
| **Flow Limiter[3]** | |
| | Healy Model 1301<br>(Figures 1A-15 and 1A-16)<br>Healy Model 1302<br>(Figures 1A-17 and 1A-18) |
| **Dispenser Vacuum Pump** | |
| | Healy Model VP1000 Vacuum Pump<br>Healy/Franklin Electric Model VP1000 Vacuum Pump<br>(Figure 1A-19) |

[2] If optional components are installed or required by regulations of other agencies, the components and model numbers manufactured by Franklin Fueling Systems may be used to facilitate installation. The use of dispenser conversion adaptors not listed above may be used to facilitate installation provided that all applicable performance standards are met.

[3] Flow limiter is mandatory when the flow rate is greater than 10.0 gallons per minute to comply with US EPA requirement. 1301 is used with 8701VV breakaway. 1302 is used with 807 swivel breakaway.

| Component | Manufacturer / Model |
|---|---|
| **Dispensers** | Note: Unihose dispensers shall be required unless as provided by Section 4.10 of CP-201. |

Gilbarco Encore Series[4]

Healy Kit VP1000R[5] or VP1000S[6]

| Model #'s | Description: |
|---|---|
| NAO | Encore 1 Grade Multi-hose |
| NA1 | Encore 2 Grade Multi-hose |
| NA2 | Encore 3 Grade Multi-hose |
| NA3 | Encore 4 Grade Multi-hose |
| NG0 | Encore 3 Grade Single-Hose |
| NG1 | Encore 4 Grade Single-Hose plus 1 |
| NG4 | Encore 2 Grade Single-Hose |
| NJ0 | Multi-hose Blender |
| NJ2 | Multi-hose Blender plus 1 |
| NL0 NL1 NL2 NL3 | Encore X+1 Blender |
| NN0 NN1 NN2 NN3 | Encore X+0 Blender |

GasBoy 9800 Series (Gilbarco)

Healy Kit VP1000M[7]

Model #'s Description:

9852 – Suffix1 Suffix2

9853 – Suffix1 Suffix2

Where:

Suffix1 can be:

| | | |
|---|---|---|
| A | = | Factory fabrication and assembly modifications to chassis |
| HC | = | High capacity model |
| M | = | Manifold supply inlet at the pumping unit inlet |
| TW1 | = | Manifold supply inlet |
| TW2 | = | Two individual supply inlets |
| X | = | Dispenser supplied by a submersible pump |
| Q | = | Utilizes an alternate meter and Pump |

[4] Encore Dispensers factory equipped with Healy VP1000 will now have an angled (~13°) outlet casting.

[5] Kit used to install Healy components in Encore Balance series dispenser. VP1000R previously sold as equivalent to VP1000L.

[6] Kit used to install Healy components in Encore Assist series dispenser. VP1000S previously sold as equivalent to VP1000K.

[7] Kit used to install Healy components in GasBoy 9800 series dispenser

**Component** **Manufacturer / Model**

Suffix2 can be:

| | | |
|---|---|---|
| B | = | Battery back-up for electronics |
| C | = | Pump Interface |
| D | = | DC conduit and junction box |
| F | = | Fuel filter |
| G | = | Imperial gallons registration |
| H | = | High hose retriever |
| I | = | Internal hose retriever |
| L | = | Lighted panel |
| N | = | Equipped to handle a long spout nozzle |
| P | = | Satellite dispenser as part of the unit (for connection to a master pump) |
| PP | = | Solenoid valves (optional only on pumps) |
| R | = | Liters registration |
| S | = | Piping for connection to satellite |
| SS | = | Stainless steel panels |
| SSA | = | Equipped with stainless steel doors |
| SSTS | = | Stainless steel tops and doors |
| T | = | Mechanical totalizer |
| U | = | Submersible drive relays |
| W | = | Heater |
| Y | = | Vapor recovery ready |
| Z | = | Front Load Nozzle |
| 2 | = | 230 VAC/60hz operation |
| 3 | = | 230 VAC/60hz operation with 380VAC/60hz motor (available on all models except 9852Q) |
| 25 | = | 230VAC/50hz operation |
| 35 | = | 230VAC/50hz operation with 380VAC/50hz motor |
| 4 | = | RS-485 interface |
| 5 | = | 50hz operation |
| 7 | = | Electronic totalizer activator on both sides |
| 9 | = | Provided with 900-R Series TopKat |

**Component** **Manufacturer / Model**

Wayne Harmony Series

Healy Kit VP1000N[8] or VP1000Q[9]

Model #'s Description:
prefix/VXXXYZ/suffix
Where:
prefix = Any number or letter (with a possible "H" for Harmony)
V = Vista
X = Any digit
Y = D or P
D = remote dispenser type for delivering fuel
P = suction pump for delivering fuel
Z = 1, 3, 4, 5, 6, 7 or 8
suffix = D1 or D2, and any combination of number(s) or letter(s)

Wayne Ovation Series

Healy Kit VP1000P[10]

Model #'s Description:
XYZ/ABC
Where:
X = B or R
B = Blended Dispenser
R = Regular Dispenser
Y = Number of hoses per side
1 = one hose per side
2 = two hoses per side
Z = Number of inlets per side
1 = one inlet
2 = two inlets
3 = three inlets

[8] Kit used to install Healy components to Harmony Balance series dispenser
[9] Kit used to install Healy components to Harmony Assist series dispenser
[10] Kit used to install Healy components to Ovation Balance or Assist series dispenser. VP1000P previously sold as equivalent to VP1000C.

**Component** **Manufacturer / Model**

A = Number of grades
- 1 = one grade
- 2 = two grades
- 3 = three grades
- 4 = four grades
- 5 = five grades

B = Number of sides
- 1 = one side
- 2 = two sides

C = Number of columns
- 1 = one column
- 2 = two columns

Wayne Vista Series

Healy Kit VP1000T[11] & VP1000V[12]

Model #'s Description:

prefix/VXXXYZ/suffix

Where:

Prefix = Any number or letter

V = Vista

X = Any digit

Y = D or P
- D = remote dispenser type for delivering fuel
- P = suction pump for delivering fuel

Z = 1, 3, 4, 5, 6, 7 or 8

Suffix = D1 or D2, and any combination of number(s) or letter(s)

Wayne Global Century & Select Series[13]

Model #'s Description

3/GABCDE/Suffix

Where:

A = Model Series
- 2 = Global Century
- 7 = Select

B = Cabinet Style
- 2 = Column Style

[11] Kit used to install Healy components to 3V and 4V Vista series dispenser. VP1000T previously sold as equivalent to VP1000C.

[12] Kit used to install Healy components to 1V and 2V Vista series dispenser. VP1000V previously sold as equivalent to VP1000F.

[13] Dispenser configuration only available for purchase from Dresser Wayne. There is no Kit for retrofit of these dispenser types.

**Component** **Manufacturer / Model**

C = Flow Rate Capacity
0 = Standard Flow
4 = Twin I, Dual Filters

D = Number of Hoses & Orientation
1 = Single, Island-Oriented
2 = Twin I, Island-Oriented
3 = Twin II, Island-Oriented
7 = Twin I, Lane-Oriented OR Single Side, Lane-Oriented w/ "R" Suffix
8 = Twin II, Lane-Oriented

E = Dispenser Type
D = Dispenser-Remote

Suffix = Any combination of letters or numbers

Wayne Reliance Series[14]

Model #'s /GABCDE/Suffix — Description

Where:

A = Model Series
5 = Reliance Mechanical Fleet – Pricing
6 = Reliance Mechanical Fleet – Volume Only

B = Cabinet Style
2 = Column Style

C = Flow Rate Capacity
0 = Standard Flow

D = Number of Hoses & Orientation
1 = Single, Island-Oriented
2 = Twin I, Island-Oriented
3 = Twin II, Island-Oriented

E = Dispenser Type
D = Dispenser-Remote

Suffix = Any combination of letters or numbers

[14] Dispenser configuration only available for purchase from Dresser Wayne. There is no Kit for retrofit of this dispenser type.

| **Component** | **Manufacturer / Model** |
|---|---|
| | FFS/Healy Universal Retrofit Manual[15] |
| Healy Kits | VP1000A[16]<br>VP1000D[17]<br>VP1000G[18]<br>VP1000H[19]<br>VP1000J[20]<br>Z071V[21]<br>Z070E[22]<br>Z008[23]<br>Z009[24] |

Table 1
Components Exempt from Identification Requirements

| Component Name | Manufacturer | Model Number |
|---|---|---|
| Dispenser Kit | Healy | VP1000A & VP1000B<br>VP1000D<br>VP1000G<br>VP1000H<br>VP1000J<br>VP1000M<br>VP1000N<br>VP1000P<br>VP1000Q<br>VP1000R<br>VP1000S<br>VP1000T<br>VP1000V<br>Z008<br>Z009<br>Z070E<br>Z071V |

[15] Any dispenser not currently listed in Exhibit 1 can be upgraded to Healy EVR using one of the kits listed in this section.
[16] Kit contains Universal Wire Harness for use in any dispenser make or model. For use with any VAC or VDC solenoid valves. VP1000A previously sold as equivalent to VP1000B.
[17] Early Gilbarco Encore 300 Blender Dispensers – 120 VAC valves (mfg. before 04/2003).
[18] Wayne DL Non-Blender Dispensers – 120 VAC valves.
[19] Tokheim Premier C Blender Dispensers – 24 VDC valves.
[20] Early Tokheim Blender Dispensers – Combination 120 VAC & 24 VDC valves.
[21] Universal Vapor Kit.
[22] Universal Electrical Kit.
[23] Standard Low Profile Single Hose Dispenser Retrofit Kit.
[24] Standard Low Profile Dual Hose Dispenser Retrofit Kit.

**Executive Order VR-201-M**
**Healy Phase II EVR System**
**Not Including ISD**

**Exhibit 1**

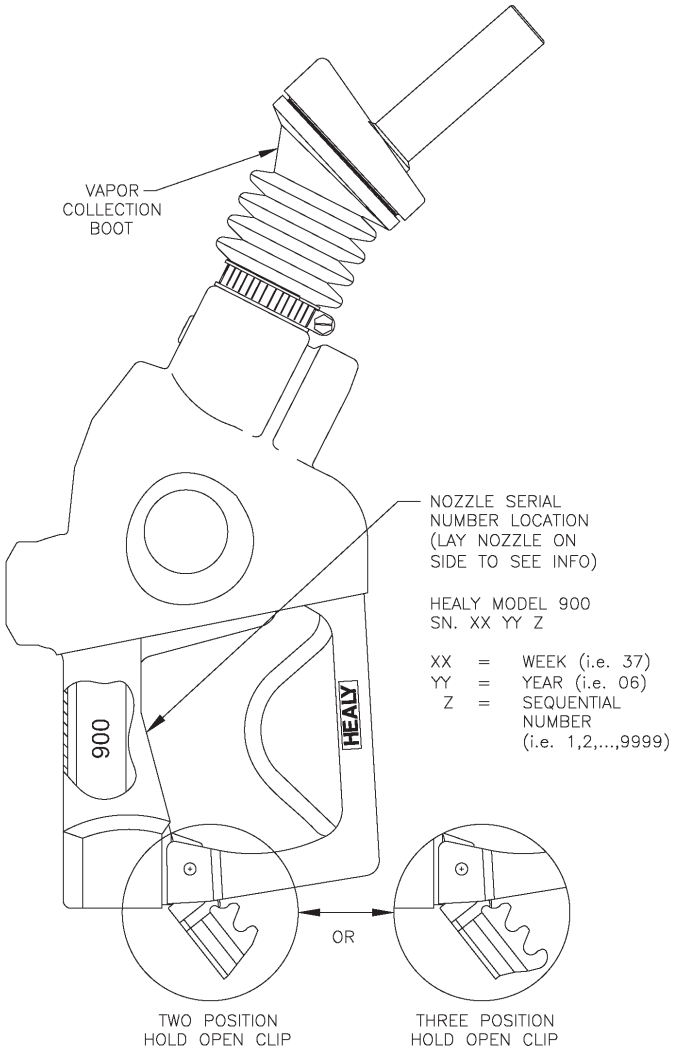


**Figure 1A-1**
**Healy Model 900 EVR Nozzle**

**Figure 1A-2**
**Healy Model 900 Nozzle**

**Executive Order VR-201-M**
**Healy Phase II EVR System**
**Not Including ISD**

**Exhibit 1**
**Figure 1A-3**
**Healy Model 9961 Clean Air Separator**

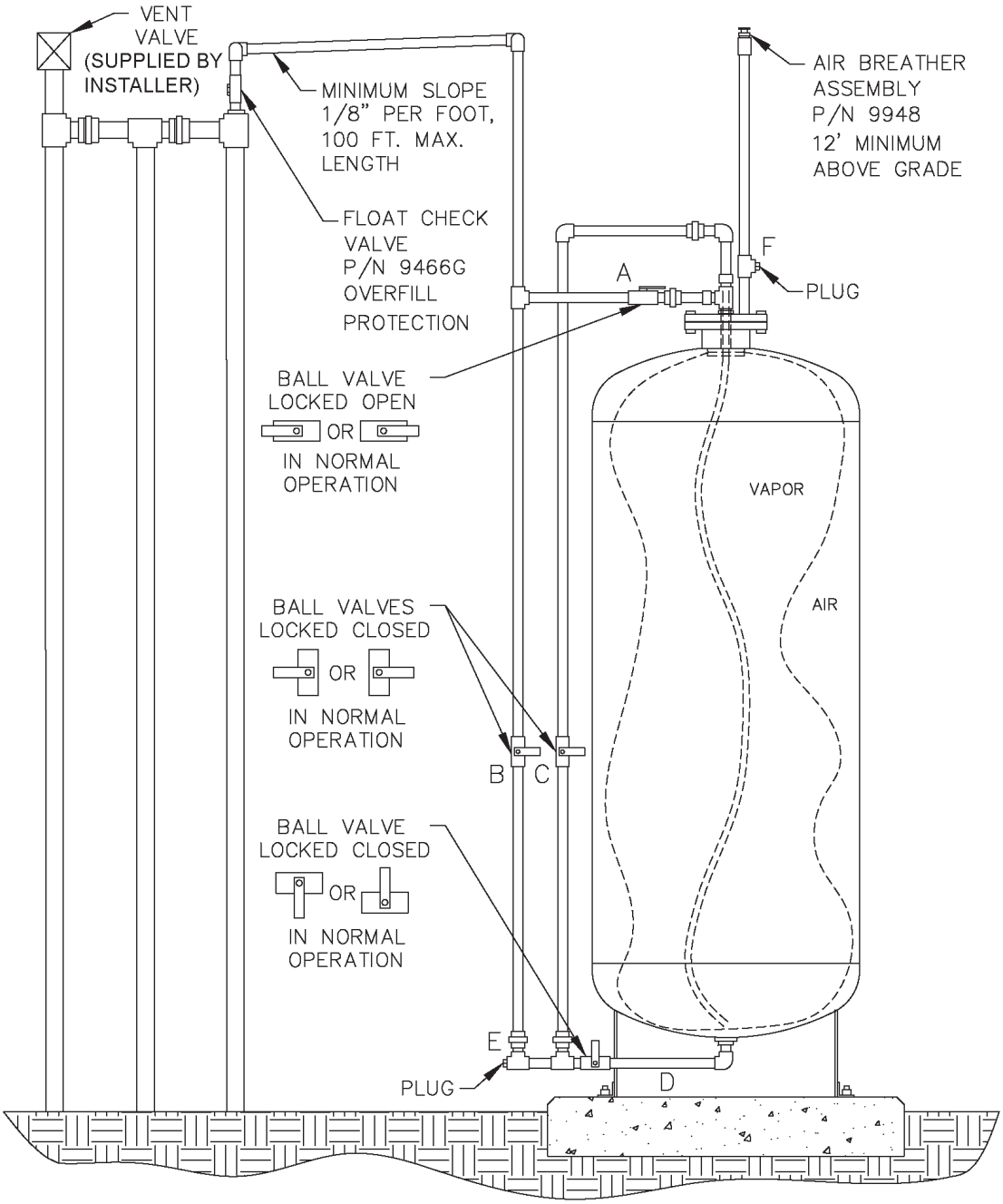

**Executive Order VR-201-M**
**Healy Phase II EVR System**
**Not Including ISD**

**Exhibit 1**

**Figure 1A-4**
**Healy Model 9961 Clean Air Separator**

**Figure 1A-5**
**Healy Model 75 Series Hose**

**Executive Order VR-201-M**
**Healy Phase II EVR System**
**Not Including ISD**

**Exhibit 1**
**Figure 1A-3H**
**Healy Model 9961H Clean Air Separator**

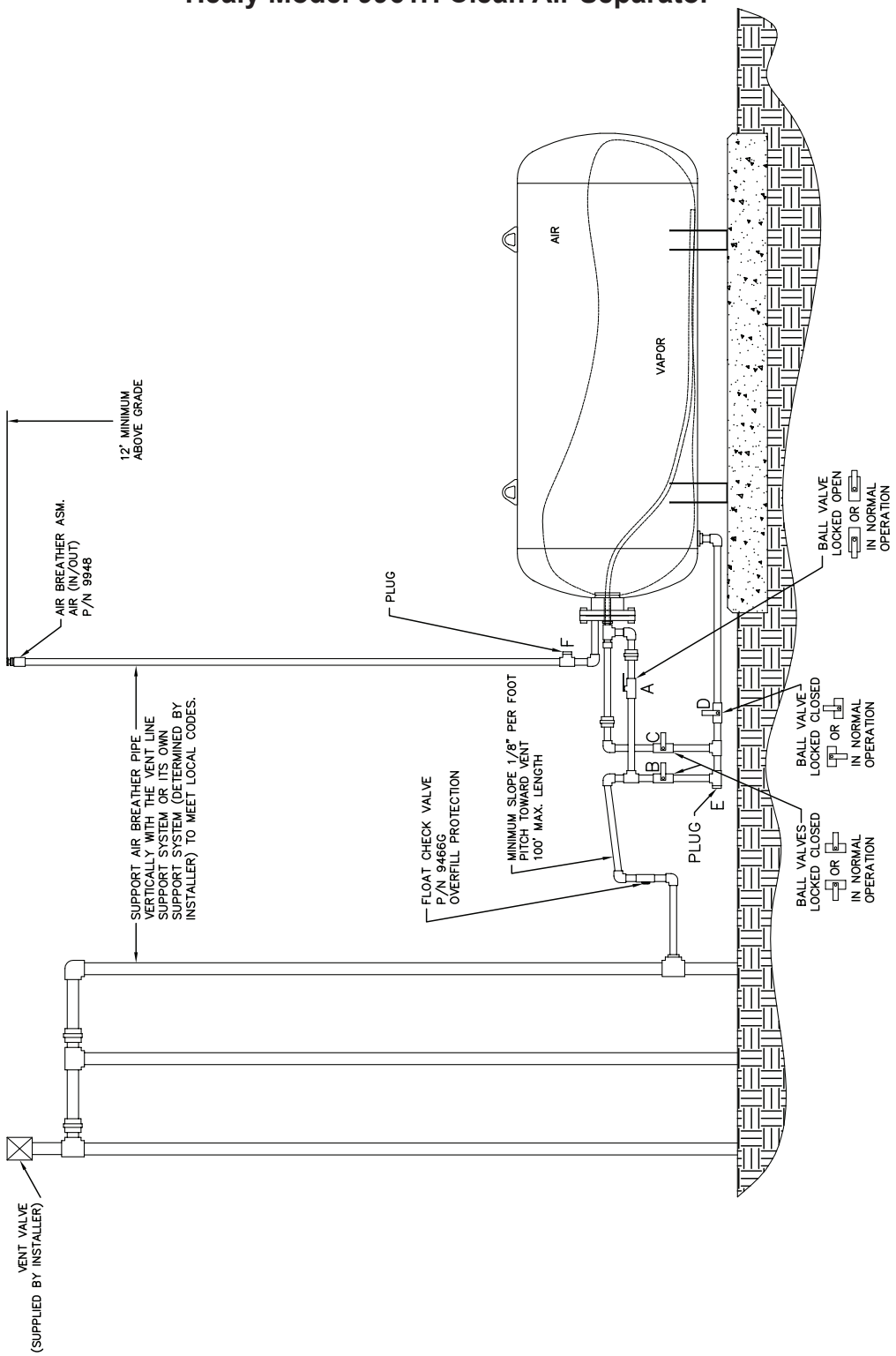

**Executive Order VR-201-M**
**Healy Phase II EVR System**
**Not Including ISD**

**Exhibit 1**
**Figure 1A-6**
**Healy Model 9961-H Clean Air Separator**

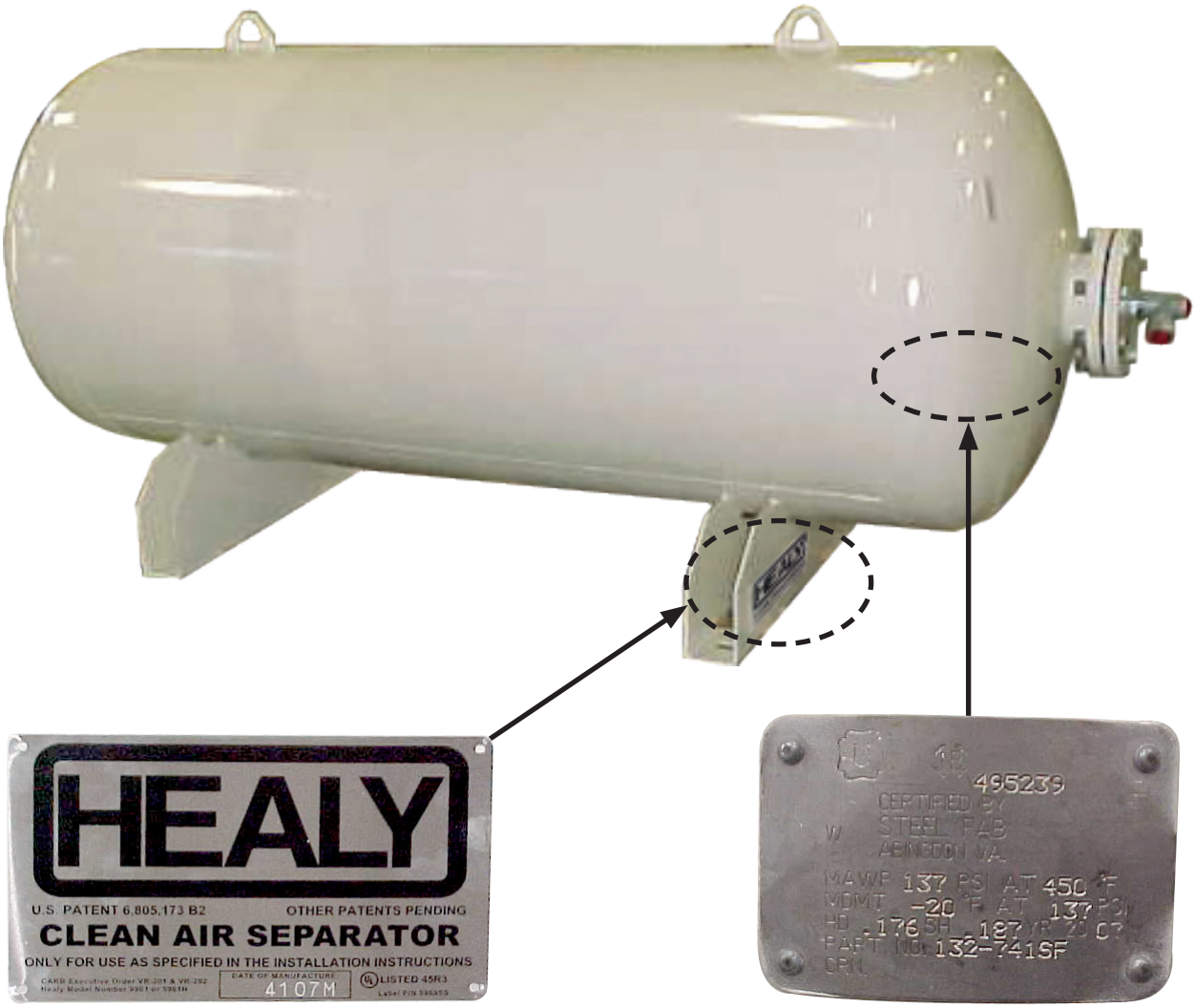


**Clean Air Separator Name Plate**

**Clean Air Separator Data Plate**
(not pictured on far side of base)

# Executive Order VR-201-M
# Healy Phase II EVR System
# Not Including ISD

## Exhibit 1
## Figure 1A-7
## Hanging Hardware Selection Options
## Model 8701VV Breakaway and 1301 Flow Limiter

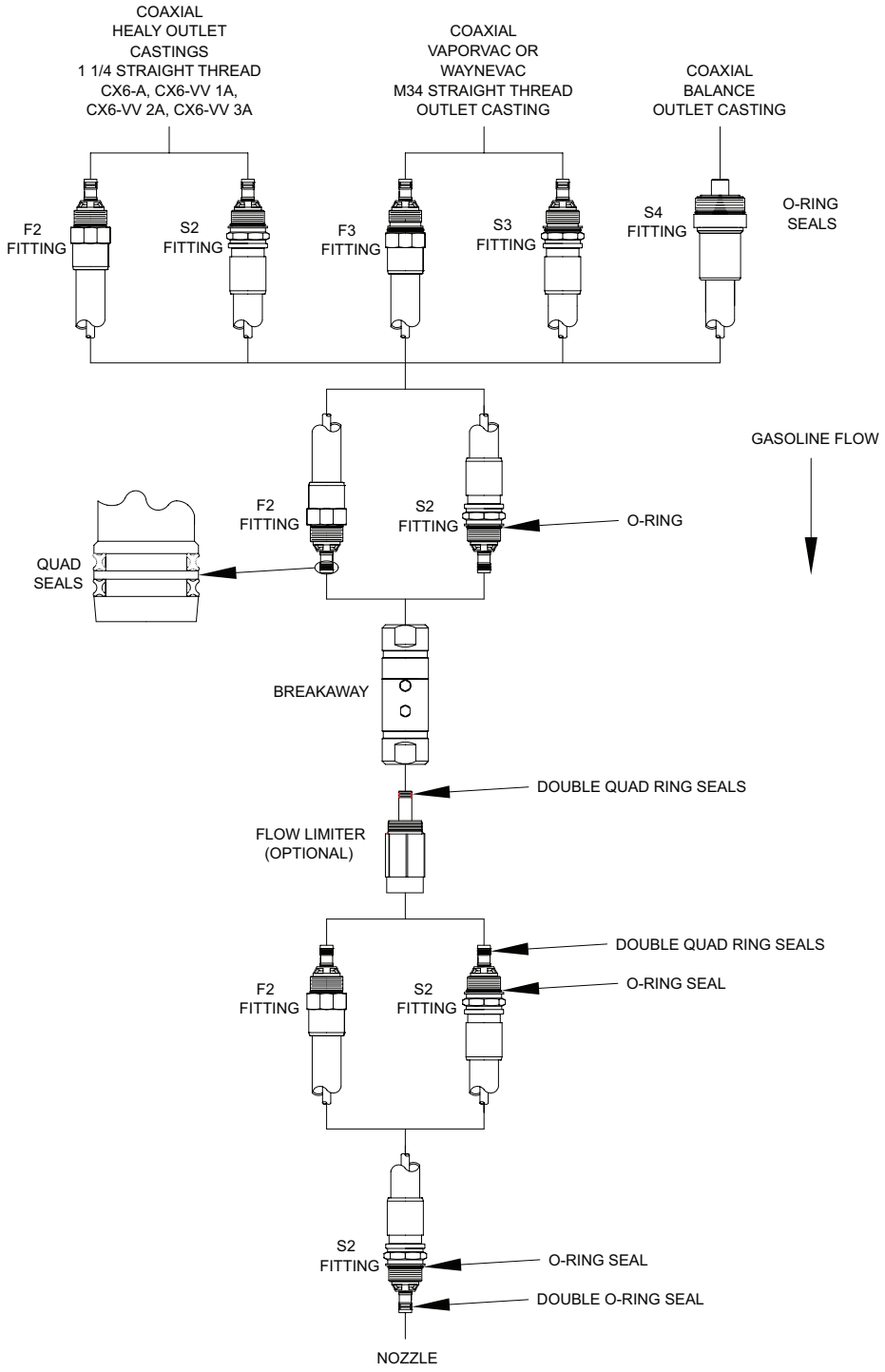

# Executive Order VR-201-M
# Healy Phase II EVR System
# Not Including ISD

## Exhibit 1
## Figure 1A-8
## Hanging Hardware Selection Options
## Model 807 Swivel Breakaway and 1302 Flow Limiter

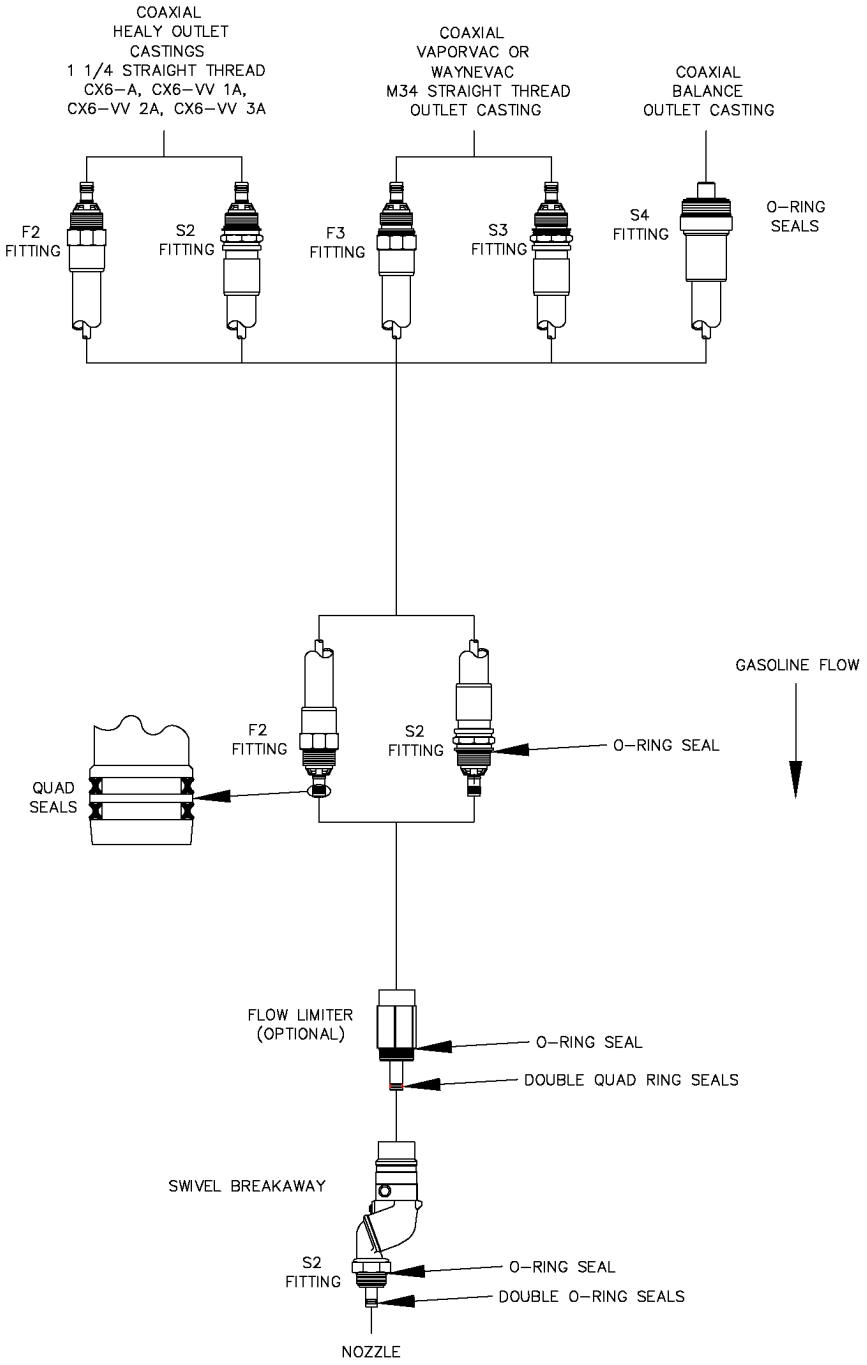

**Executive Order VR-201-M**
**Healy Phase II EVR System**
**Not Including ISD**

**Exhibit 1**
**Dispenser Conversion Adaptors**

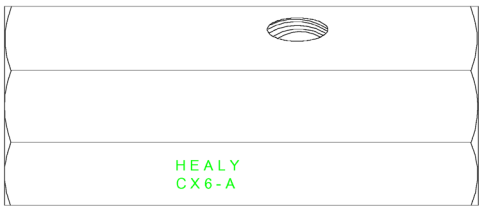


**Figure 1A-9**
**Healy Model CX6-A**

**Figure 1A-9**
**Healy Model CX6-A**

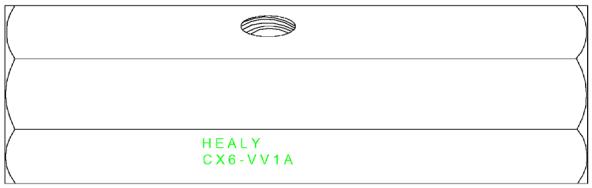


**Figure 1A-9**
**Healy Model CX6-VV1A**

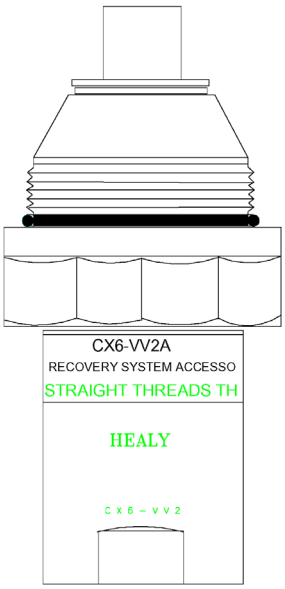


**Figure 1A-9**
**Healy Model CX6-VV2A**

**Executive Order VR-201-M**
**Healy Phase II EVR System**
**Not Including ISD**

**Exhibit 1**
**Dispenser Conversion Adaptors**

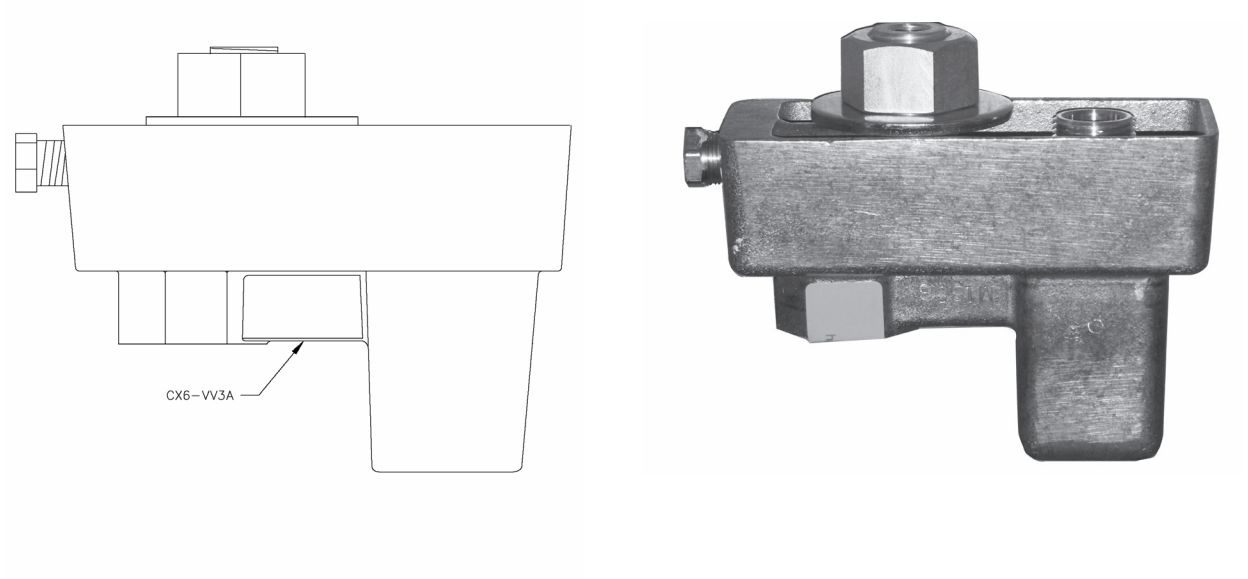


**Figure 1A-10**
**Healy Model CX6-VV3A**

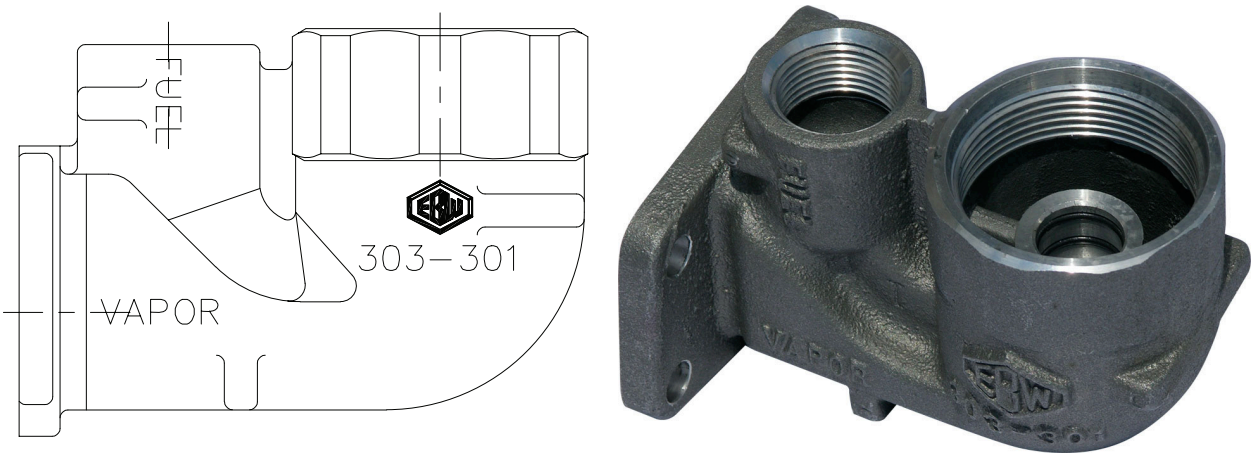


**Figure 1A-10**
**EBW Model 303-301-01**

**Executive Order VR-201-M**
**Healy Phase II EVR System**
**Not Including ISD**

**Exhibit 1**
**Healy Model 8701VV Breakaway**

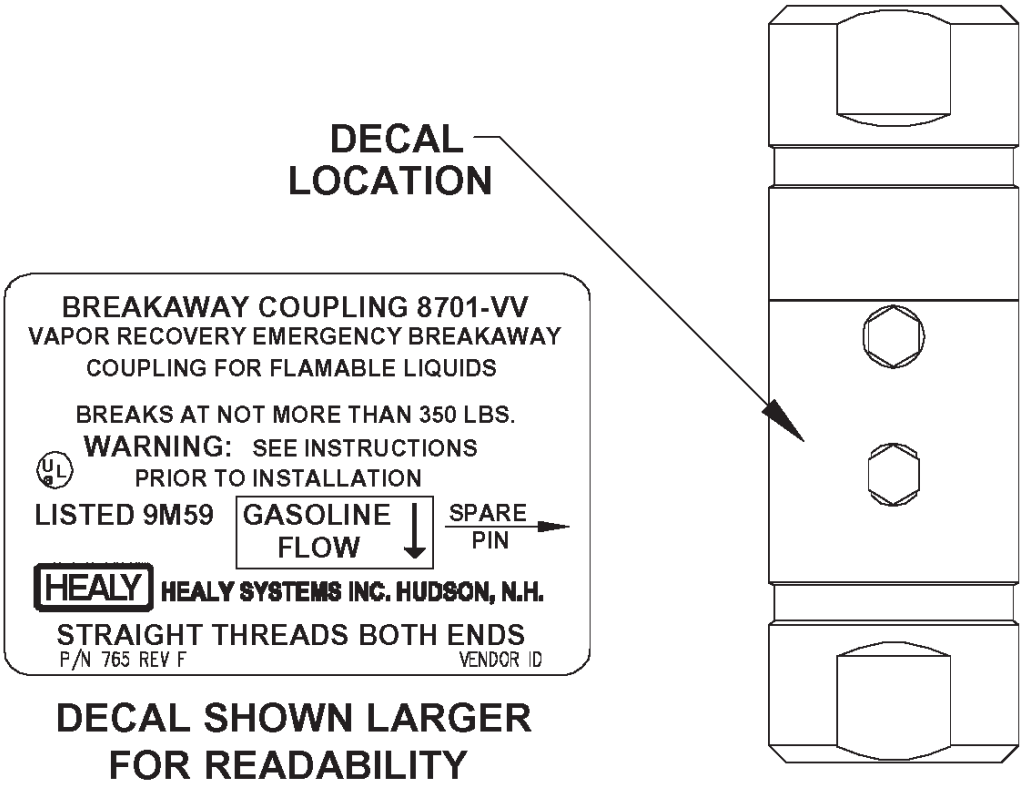


**Figure 1A-11**

**Figure 1A-12**

**Executive Order VR-201-M**
**Healy Phase II EVR System**
**Not Including ISD**

**Exhibit 1**
**Healy Model 807 Swivel Breakaway**

**Figure 1A-13**

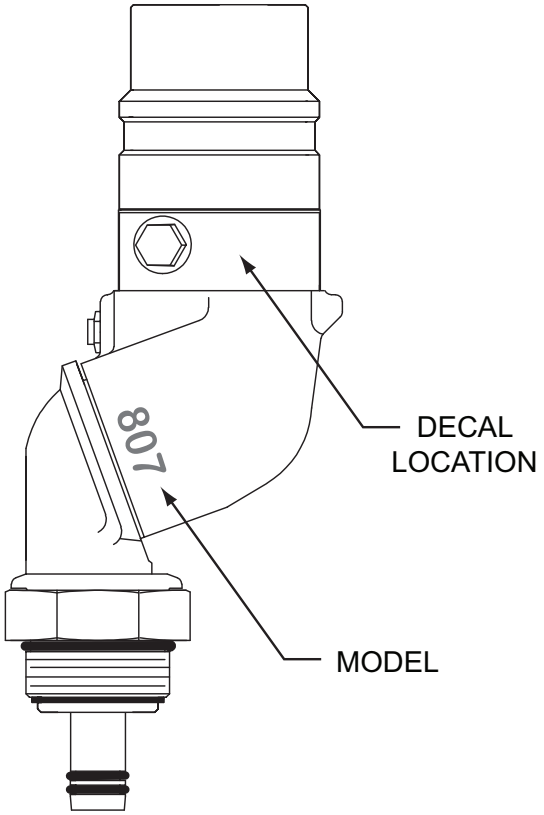


**Figure 1A-14**

FLOW ▼ STRAIGHT THDS. BOTH ENDS
**VAPOR RECOVERY EMERGENCY BREAKAWAY**
**COUPLING FOR FLAMMABLE LIQUIDS**
**MAX. SEPARATION FORCE 350#**
FRANKLIN FUELING SYSTEMS MADISON WI
UL LISTED 9M59
MODEL 807
SPARE SHEAR SCREW ▼
LBL P/N 893

FLOW ▼ STRAIGHT THDS. BOTH ENDS
**VAPOR RECOVERY EMERGENCY BREAKAWAY**
**COUPLING FOR FLAMMABLE LIQUIDS**
**MAX. SEPARATION FORCE 350#**
UL LISTED 9M59
MODEL 807
Healy Systems Inc. Hudson, N.H. 03051
SPARE SHEAR SCREW ▼
LBL P/N 893

DECALS SHOWN LARGER FOR READABILITY

EITHER LABEL MAY APPLY

**Executive Order VR-201-M**
**Healy Phase II EVR System**
**Not Including ISD**

**Exhibit 1**

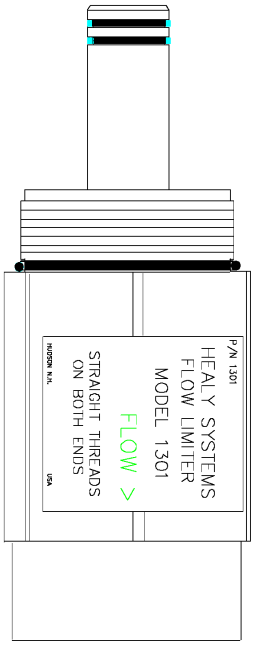


**Figure 1A-15**
**Healy Model 1301 Flow Limiter**

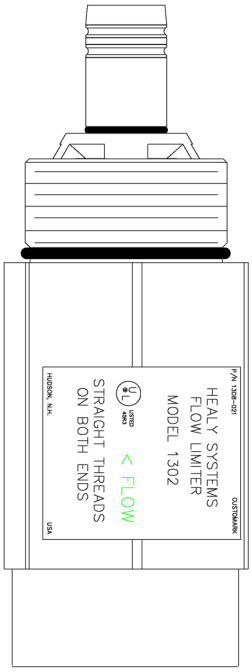


**Figure 1A-17**
**Healy Model 1302 Flow Limiter**

**Figure 1A-16**
**Healy Model 1301 Flow Limiter**

**Figure 1A-18**
**Healy Model 1302 Flow Limiter**

**Executive Order VR-201-M**
**Healy Phase II EVR System**
**Not Including ISD**

**Exhibit 1**
**Figure 1A-19**
**Healy Model VP1000 Vacuum Pump**

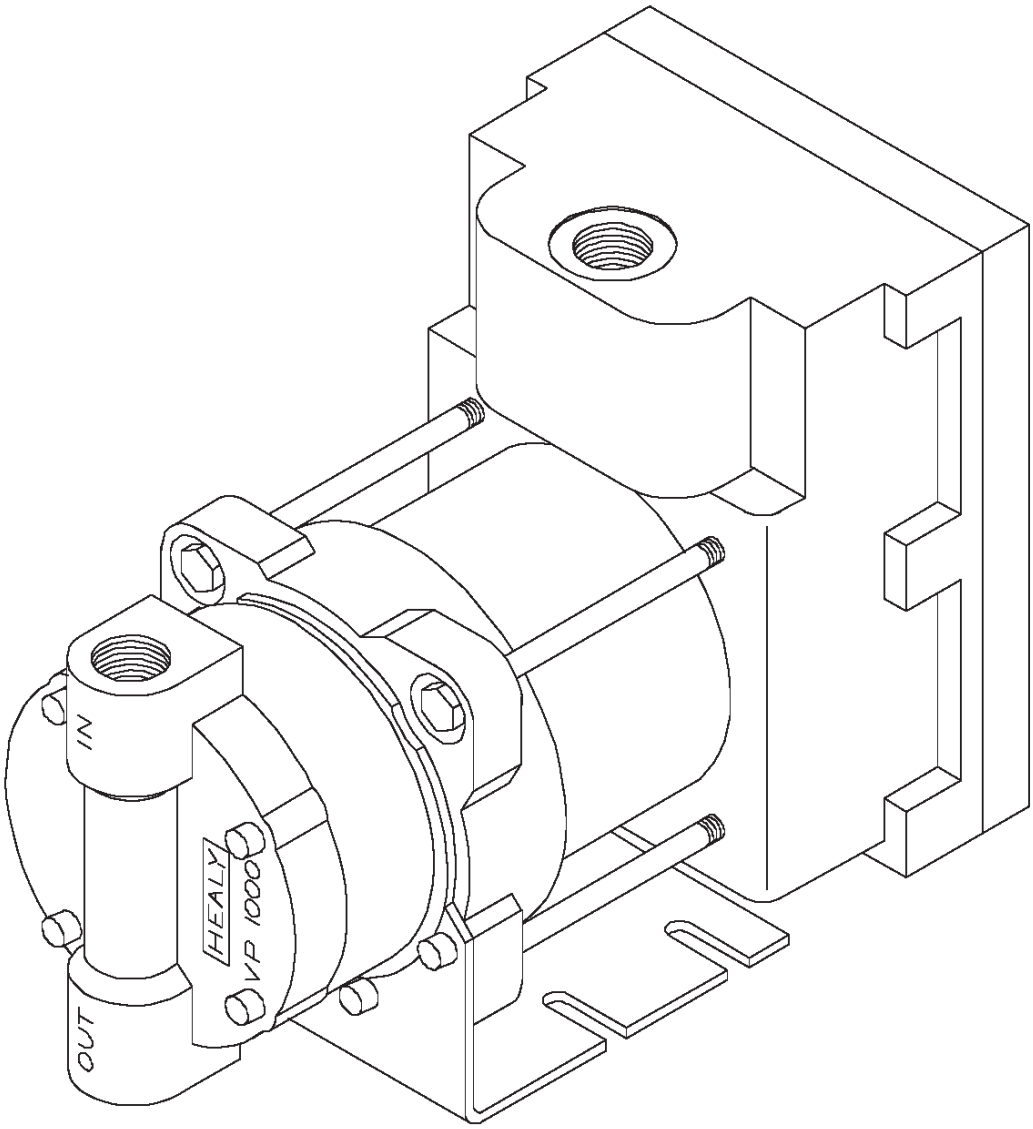

**Executive Order VR-201-M**
**Healy Phase II EVR System**
**Not Including ISD**

**Exhibit 1-Part 2**
**Vapor Equipment List for Liquid Condensate Trap**

| Component | Manufacturer/Model |
|---|---|
| **Riser Adapter** | INCON model TSP-K2A (Figure 1A-20) |
| **In-Line Filter** | 140 micron, Swagelok B-4F2-140 or SS-4F2-140, or equivalent |
| **Screen** | Aluminum Insect screen (18X14 mesh), or Stainless Steel Insect screen (18X18 mesh). |
| **Stainless Steel Hose Clamp** | Sized to secure screen to suction tube. |
| **Liquid Sensor** [1] | Must have an audible and visual alarm |
| **Liquid Condensate Trap**[1] | Any capacity, manufacturer, make and model |

[1] Must meet applicable State Water Resources Control Board requirements (*e.g.* LG-113, LG-167 and LG-169) and any local authority having jurisdiction which includes the Certified Unified Program Agency (CUPA).

**Executive Order VR-201-M**
**Healy Phase II EVR System**
**Not Including ISD**

**Figure 1A-20**
**Typical Liquid Condensate Trap Installed Below the Transition Sump**

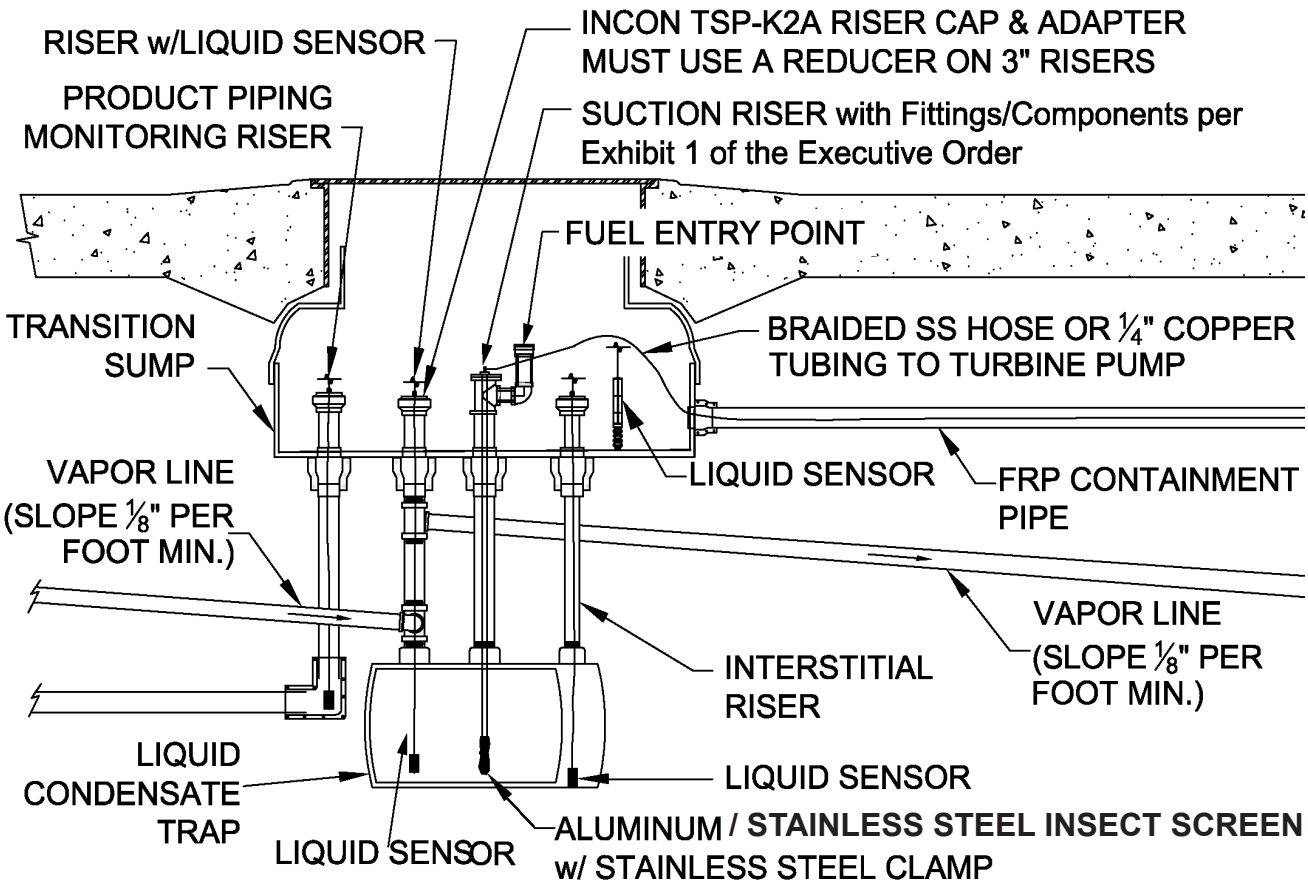

**Executive Order VR-201-M**
**Healy Phase II EVR System**
**Not Including ISD**

**Figure 1A-21**
**Typical Liquid Condensate Trap Installed Inside the Transition Sump**

**Note:** A Liquid Condensate Trap installed inside a liquid AND vapor tight transition sump that is monitored with a liquid sensor can be single walled (if installed before July 1, 2004).

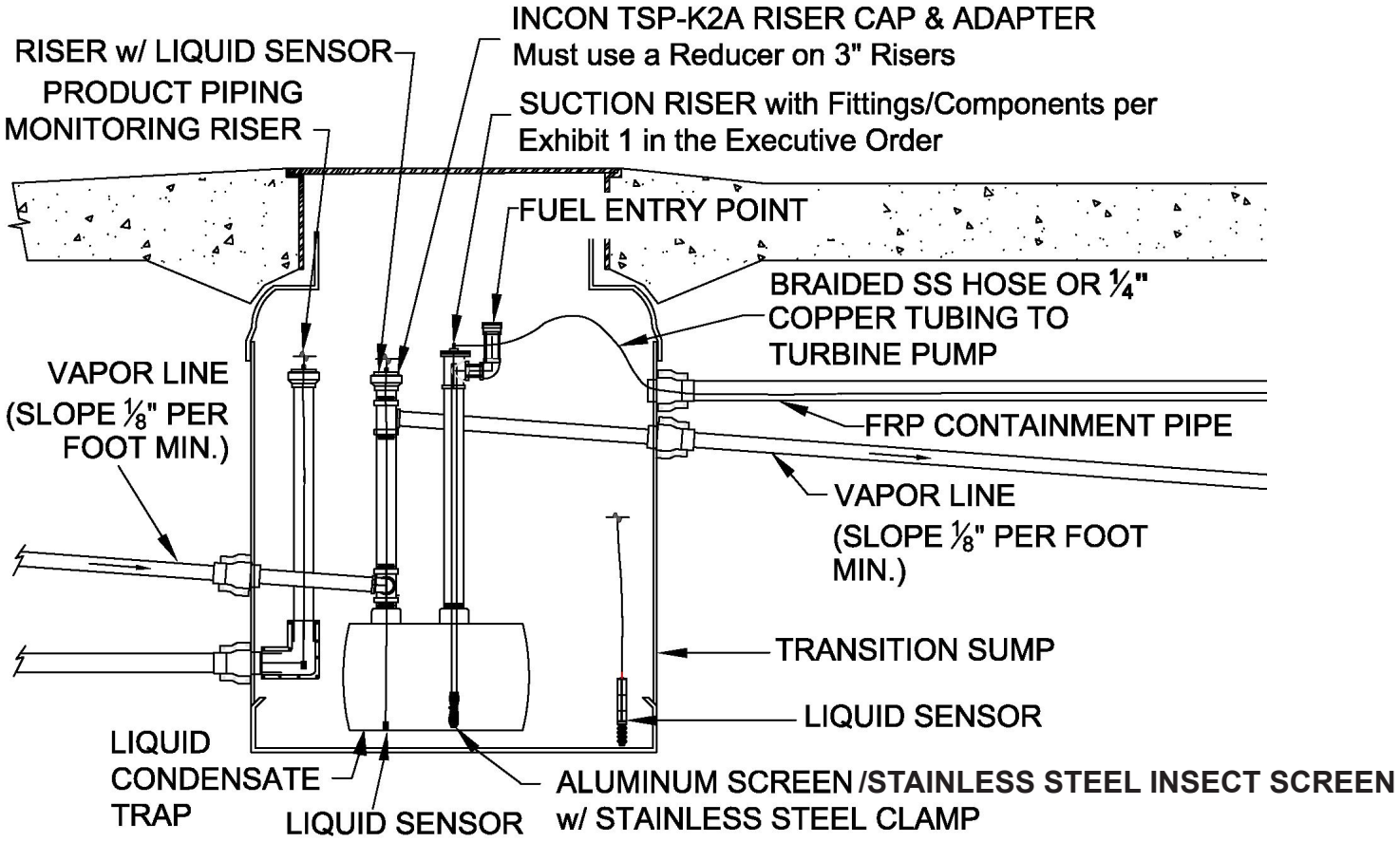

**Executive Order VR-201-M**
**Healy Phase II EVR System**
**Not Including ISD**

## Exhibit 2

## System Specifications

This exhibit contains the installation, maintenance and compliance standards and specifications that apply to the Healy Phase II EVR System installed in a gasoline dispensing facility. All components must be installed in accordance with the specifications in the **ARB Approved Installation, Operation and Maintenance Manual**. Installation, maintenance and repair of system components, including removal and installation of such components in the course of any required tests, shall be performed by technicians certified by the appropriate manufacturer. Additional certifications may be required in accordance with local district requirements. Provided that there are no other local district requirements, a GDF Owner / Operator can remove and install nozzles, curb hoses, breakaways, flow limiters and whip hoses without a manufacturer certification

### Nozzle

1. A vapor collection boot shall be installed on the nozzle at the base of the spout, as shown in **Figure 2B-1**.

2. The Healy Model 900 nozzle has an integral vapor valve which prevents the loss of vapor from the underground storage tanks, ensures proper operation of the system and prevents the ingestion of air into the system. Any dispenser that has a nozzle installed that is determined to have a defective vapor valve, as described in items 2.1 or 2.2 below, shall be immediately removed from service (including nozzle(s) on both sides of dispenser) and a call for repair made immediately.

   2.1. The maximum allowable leak rate for the nozzle vapor path, as determined by TP-201.2B, shall not exceed the following:

   0.038 cubic feet per hour (CFH) at a pressure of two inches water column (2.00” wc), and
   0.10 CFH at a vacuum of one hundred inches water column (-100.00” wc)

   2.2. Verification of the integrity of the vapor valve can be performed on installed nozzles using the nozzle bag test procedure in Exhibit 7.

### Vapor Collection

1. The V/L ratio of the system shall be **1.05 plus or minus 0.10 (0.95 to 1.15)**, measured at a flow rate between six and ten gallons per minute (6.0 – 10.0 gpm). *Any fueling point whose V/L ratio is determined to be at or below 0.80 shall be deemed defective and removed from service.* The V/L ratio shall be determined by using the test procedure in Exhibit 5 with the shut-off port excluded, or with an ARB approved alternate test procedure. See Section 7 of Exhibit 5 for guidance on V/L adjustment.

2. Inoperative vapor pumps, as determined by the ***ARB Approved Installation, Operation and Maintenance Manual***, constitute a defect.

3. For unihose dispensers, any modifications or repairs to the nozzle, hanging hardware or vacuum pump done to bring one fuel grade V/L into compliance at a fueling point invalidates the results of any previous fuel grade(s) tested before the alteration. All fuel grades at that fueling point shall be tested again to verify compliance.

**Inverted Coaxial Hoses**

1. The maximum length of the hose assembly, including hose adaptor, whip hose, breakaway, flow limiter (optional) and inverted coaxial hose, measured at the base of the nozzle, shall be no more than twenty (20) feet.

2. Any hose configuration is allowed.

**Breakaway Couplings**

1. Testing is required after reconnecting the breakaway to ensure proper operation and no observed leaks. The procedure for reconnecting breakaway and fueling point testing after a drive-off, referenced in Section 1.4 of Healy Systems Scheduled Maintenance, shall be conducted to verify that breakaway, hose and nozzle are operating properly after a drive-off.

**Flow Limiters**

1. Flow limiter is mandatory when the flow rate is greater than 10.0 gallons per minute to comply with U.S. EPA requirement.

**Clean Air Separator Pressure Management System**

1. The Clean Air Separator (CAS) is a passive gasoline storage tank ullage pressure management system, with no electrical requirements. The Clean Air Separator vapor integrity shall be evaluated using the test procedure outlined in Exhibit 4 of this Executive Order.

    a. The system shall be removed from service when the Clean Air Separator fails the leak decay test outlined in Exhibit 4.

    b. Unless there is maintenance or testing being conducted on the Clean Air Separator, the system shall be removed from service when the four ball valves are not locked in the positions shown in **Figure 2B-2** or **2B-2H** for normal Clean Air Separator operation. Figure 2B-2 applies to vertical CAS installations and Figure 2B-2H applies to horizontal CAS installations.

2. The Clean Air Separator shall be installed within 100 feet from the vent line(s), and the associated piping shall be sloped 1/8" per foot minimum toward the vent line(s).

**Pressure/Vacuum Vent Valves for Gasoline Storage Tank Vents**

1. All P/V vent valves shall be an ARB-certified P/V vent valve for a Phase I system.

2. At least one pressure/vacuum (P/V) vent valve shall be installed on each gasoline storage tank vent. The maximum number of P/V vent valves allowed and P/V vent valve performance specifications are listed in the applicable Phase I EVR Executive Order. Vent lines may be manifold to minimize the number of P/V vent valves and potential leak sources, provided the manifold conforms to all applicable fire regulations. At least one P/V vent valve shall be installed on vents if a manifold is incorporated. **Figure 2B-3** or **2B-3H** shows a typical manifold configuration for a single P/V vent valve with the Clean Air Separator. If two or more P/V vent valves are desired, they shall be installed in parallel, so that each can serve as a backup to the other if one should fail to open properly. **Figure 2B-4** or **2B-4H** shows a typical manifold configuration for two P/V vent valves installed in parallel with the Clean Air Separator. **Figure 2B-5** or **2B-5H** shows a typical manifold configuration for three P/V vent valves installed in parallel with the Clean Air Separator. **Figure 2B-6** or **2B-6H** shows a typical configuration for a P/V vent valve mounted on a single 3" vent line with the Clean Air Separator. Figures 2B-3, 2B-4, 2B-5 and 2B-6 apply to vertical CAS installations. Figures 2B-3H, 2B-4H, 2B-5H and 2B-6H apply to horizontal CAS installations.

**Vapor Recovery Piping Configurations**

**NOTE: Vapor Return Piping shall meet the requirements specified in section 4.11 of CP-201.**

1. Vapor Return and Vent Lines

   a. For facilities installed on or after April 1, 2003, all vapor return and vent lines shall be a minimum nominal internal diameter of 2 inches from the dispensers or the vent stacks to the first manifold. All lines after the first manifold and back to the underground storage tank shall have a minimum nominal internal diameter of 3 inches.

      Note: Facilities permitted by a local district prior to April 1, 2003 shall be required to meet the three inch diameter standard only upon facility modification requiring exposing at least 50 percent of the underground vapor return piping.

After backfilling the vapor return and vent lines, the maximum pressure drop shall not exceed 0.5 inches WC at 60 cubic feet per hour as determined by TP-201.4, Dynamic Backpressure. The pressure drop shall be measured from the dispenser riser to the UST with pressure/vacuum vent valves installed and with the poppeted Phase I vapor connection open.

b. For existing installations, the maximum pressure drop through the system shall not exceed 0.5 inches WC at 60 cubic feet per hour as determined by TP-201.4, Dynamic Backpressure. The pressure drop shall be measured from the dispenser riser to the UST with the pressure/vacuum vent valves installed and with the poppeted Phase I vapor connection open.

Note: The V/L test from Exhibit 5 may be used to verify proper operation of the system, in lieu of measuring the pressure drop through the lines, provided that at least two gallons of product are introduced into the system through each dispenser riser, prior to the test.

2. All vapor return lines shall have a minimum slope of 1/8 inch per foot from the dispenser riser to the riser of the underground storage tank (UST). A slope of 1/4 inch or more per foot is recommended wherever feasible. The vapor return path from any dispenser riser to the UST shall be free of liquid or fixed blockage.

Exception: When it is not possible to achieve the necessary minimum slope from the dispenser back to the underground storage tanks, a low point Liquid Condensate Trap (i.e. knock out pot, thief port) can be utilized as long as the conditions under **Liquid Condensate Traps** in this Exhibit 2 are met.

3. The dispenser shall be connected to the riser with either flexible or rigid material that is listed for use with gasoline. The dispenser-to-riser connection shall be installed so that any liquid in the lines will drain toward the gasoline storage tank. The internal diameter of the connector, including all fittings, shall not be less than one-half inch (1/2”).

Note: The dispenser-to-riser connection is defined as the piping connection between the outlet of the vacuum pump and the inlet of the dispenser riser. A vapor shear valve may also be part of the riser connection.

4. There is no length restriction for the vapor return piping of the system as long as the system complies with the maximum pressure drop requirement of Item 1 (or the V/L option).

5. No product shall be dispensed from any fueling point at a GDF installed with the Healy Phase II EVR System if there is a vapor line that is disconnected and open to the atmosphere.

**Dispenser Vapor Piping**

1. Any dispenser with a dispenser piping test valve in the closed position shall be considered a defect.

2. The ball valve shall be installed between the test port and the vacuum pump. The ball valve and test port shall be located on the inlet side of the vacuum pump.

**Liquid Condensate Traps**

**1.** There shall be no vapor leaks when tested in accordance with the latest version of TP 201.3, **Determination of 2 Inch WC Static Pressure Performance of Vapor Recovery Systems of Dispensing Facilities**.

**2.** The Liquid Level Sensor shall alarm within five (5) minutes when tested in accordance with Exhibit 9, **Liquid Condensate Trap Compliance Test**.

**3.** The Liquid Level Sensor audible alarm shall be installed at a location that is most likely to be heard by the station attendant during normal station operation (e.g. cash register).

**4.** The Liquid Evacuation System shall automatically evacuate gasoline when tested in accordance with Exhibit 9, **Liquid Condensate Trap Compliance Test.**

**5.** A metal tag specifying the capacity of the Liquid Condensate Trap shall be installed and maintained as specified in the Installation, Operation, and Maintenance Manual.

**Phase I System**

1. The Phase I system shall be an ARB-certified system that demonstrates compliance with the static pressure decay test criteria contained in the latest version of TP-201.3.

**Maintenance Records**

1. Each GDF operator/owner shall keep records of maintenance performed at the facility. Such records shall be maintained on site in accordance with district requirements or policies. The records shall include the maintenance or test date, repair date to correct test failure, maintenance or test performed, affiliation, telephone number, name and Certified Technician Identification Number of individual conducting maintenance or test. Additional information may be required in accordance with local district requirements. An example of a GDF Maintenance Record is shown in **Figure 2B-7**.

2. Maintenance shall be conducted in accordance with Healy Systems Scheduled Maintenance section of the ***ARB Approved Installation, Operation, and Maintenance Manual***.

3. Reconnection of breakaways shall be included in the maintenance records.

**Executive Order VR-201-M**
**Healy Phase II EVR System**
**Not Including ISD**

**Exhibit 2**
**Figure 2B-1**
**Vapor Boot for Healy 900 Nozzle**

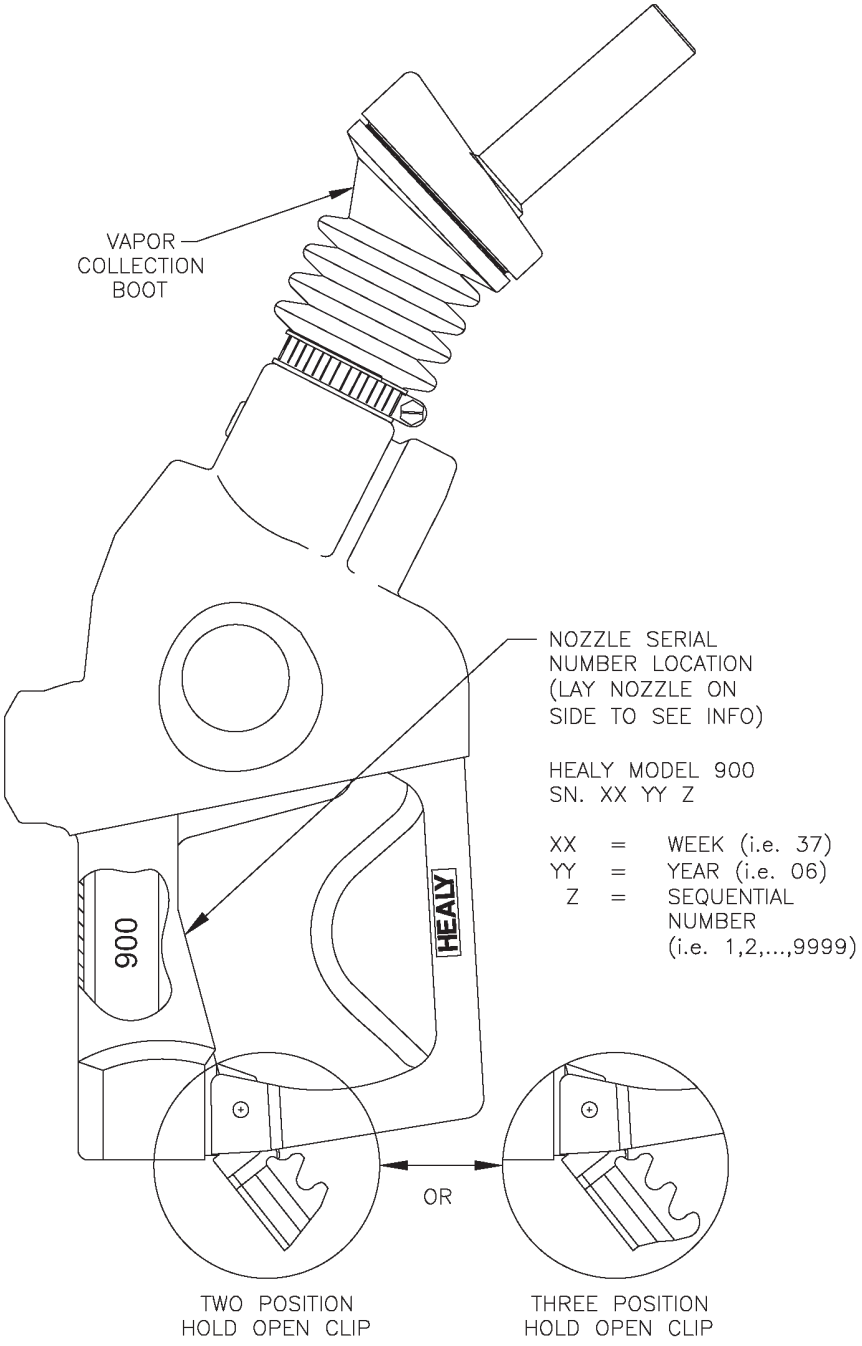

**Executive Order VR-201-M**
**Healy Phase II EVR System**
**Not Including ISD**

**Exhibit 2**
**Figure 2B-2**
**Clean Air Separator Normal Operation Configuration**

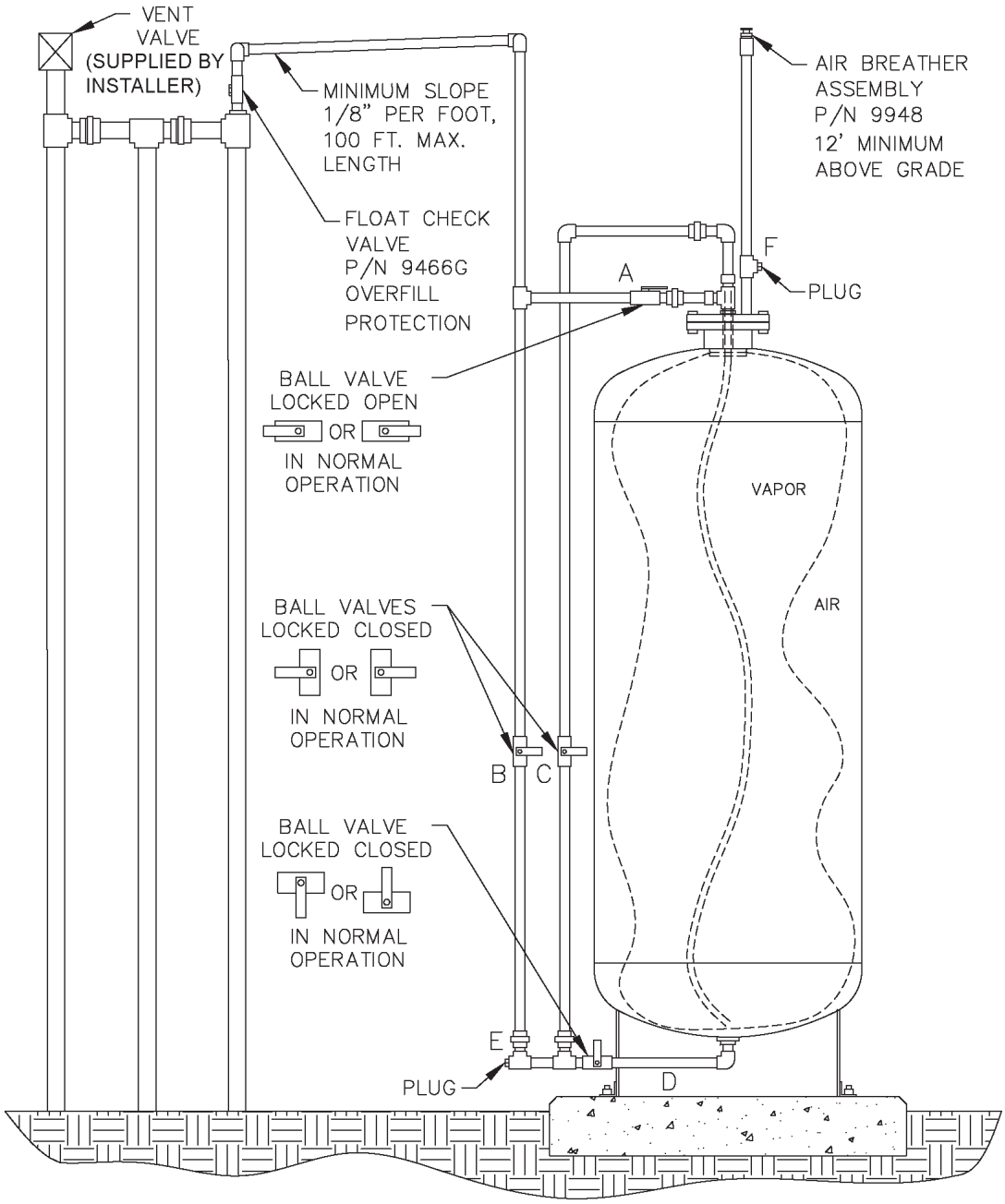

# Executive Order VR-201-M
# Healy Phase II EVR System
# Not Including ISD

## Exhibit 2
## Figure 2B-2H
## Clean Air Separator Normal Operation Configuration

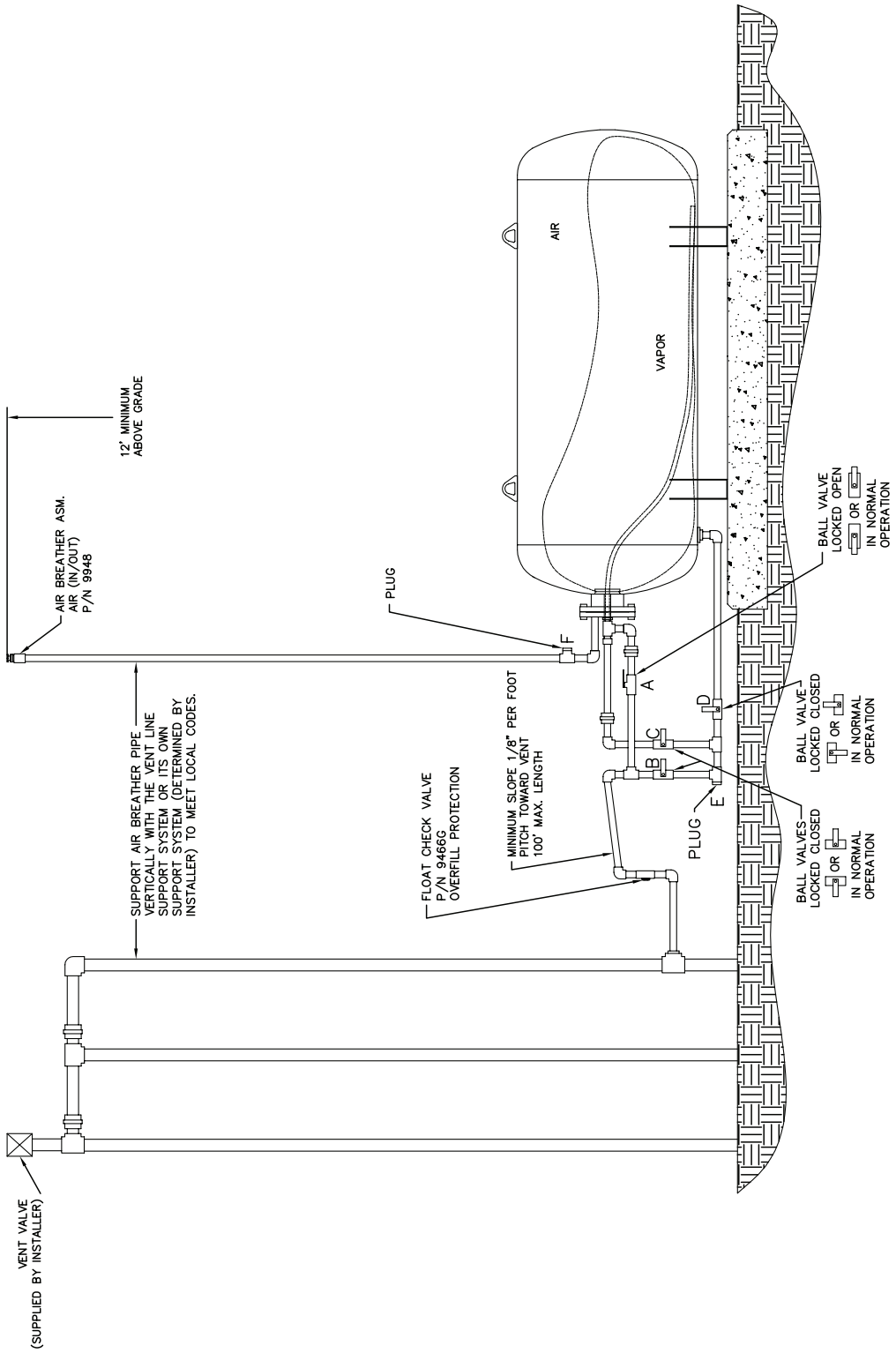

**Executive Order VR-201-M**
**Healy Phase II EVR System**
**Not Including ISD**

**Exhibit 2**
**Figure 2B-3**
**Typical Installation of a Single P/V Vent Valve Manifold with Healy Clean Air Separator**

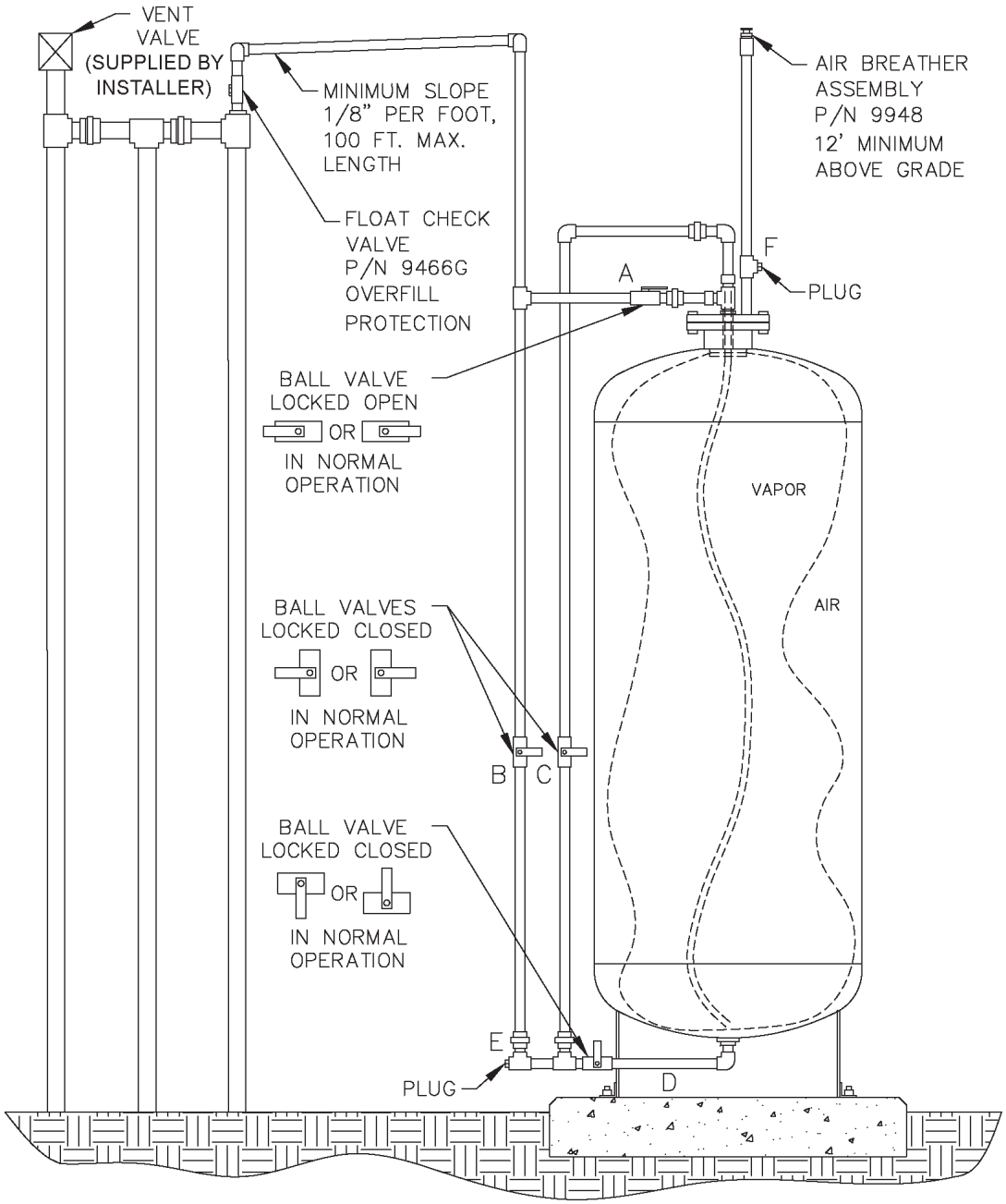

# Executive Order VR-201-M
# Healy Phase II EVR System
# Not Including ISD

## Exhibit 2
## Figure 2B-3H
## Typical Installation of a Single P/V Vent Valve Manifold with Healy Clean Air Separator

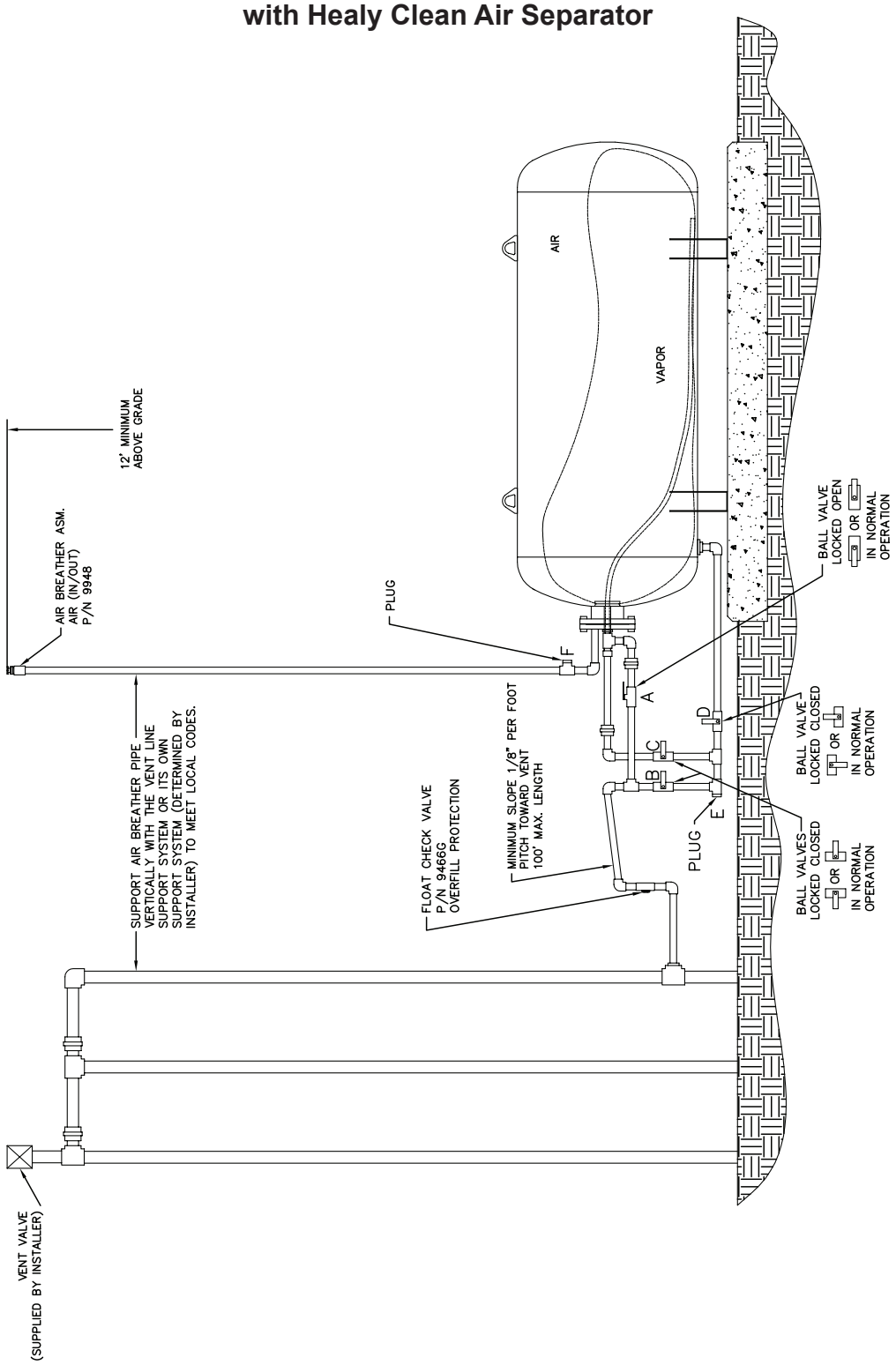

**Executive Order VR-201-M**
**Healy Phase II EVR System**
**Not Including ISD**

**Exhibit 2**
**Figure 2B-4**
**Typical Installation of a Two P/V Vent Valve Parallel Manifold with Healy Clean Air Separator**

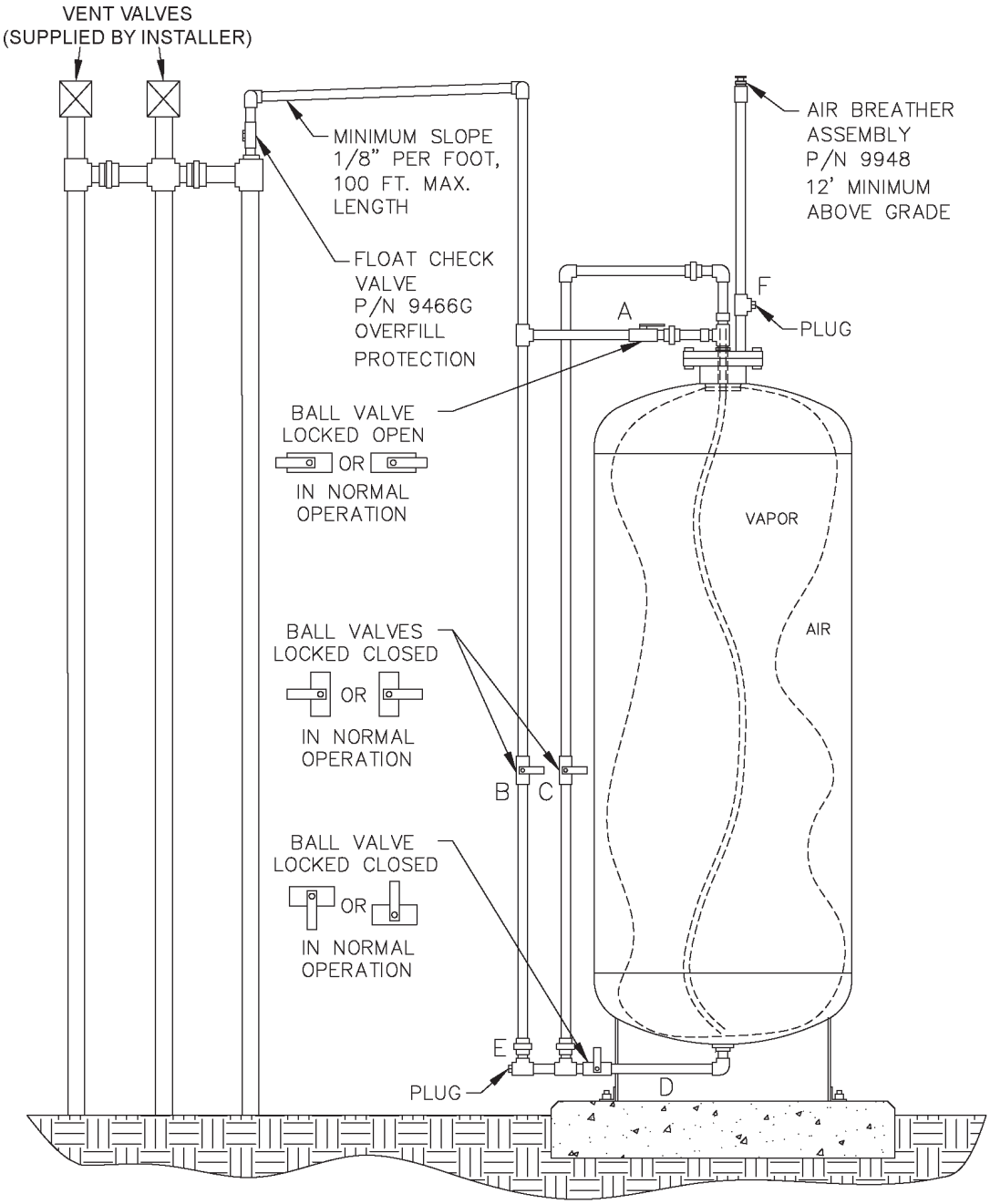

# Executive Order VR-201-M
# Healy Phase II EVR System
# Not Including ISD

## Exhibit 2
## Figure 2B-4H
## Typical Installation of a Two P/V Vent Valve Parallel Manifold with Healy Clean Air Separator

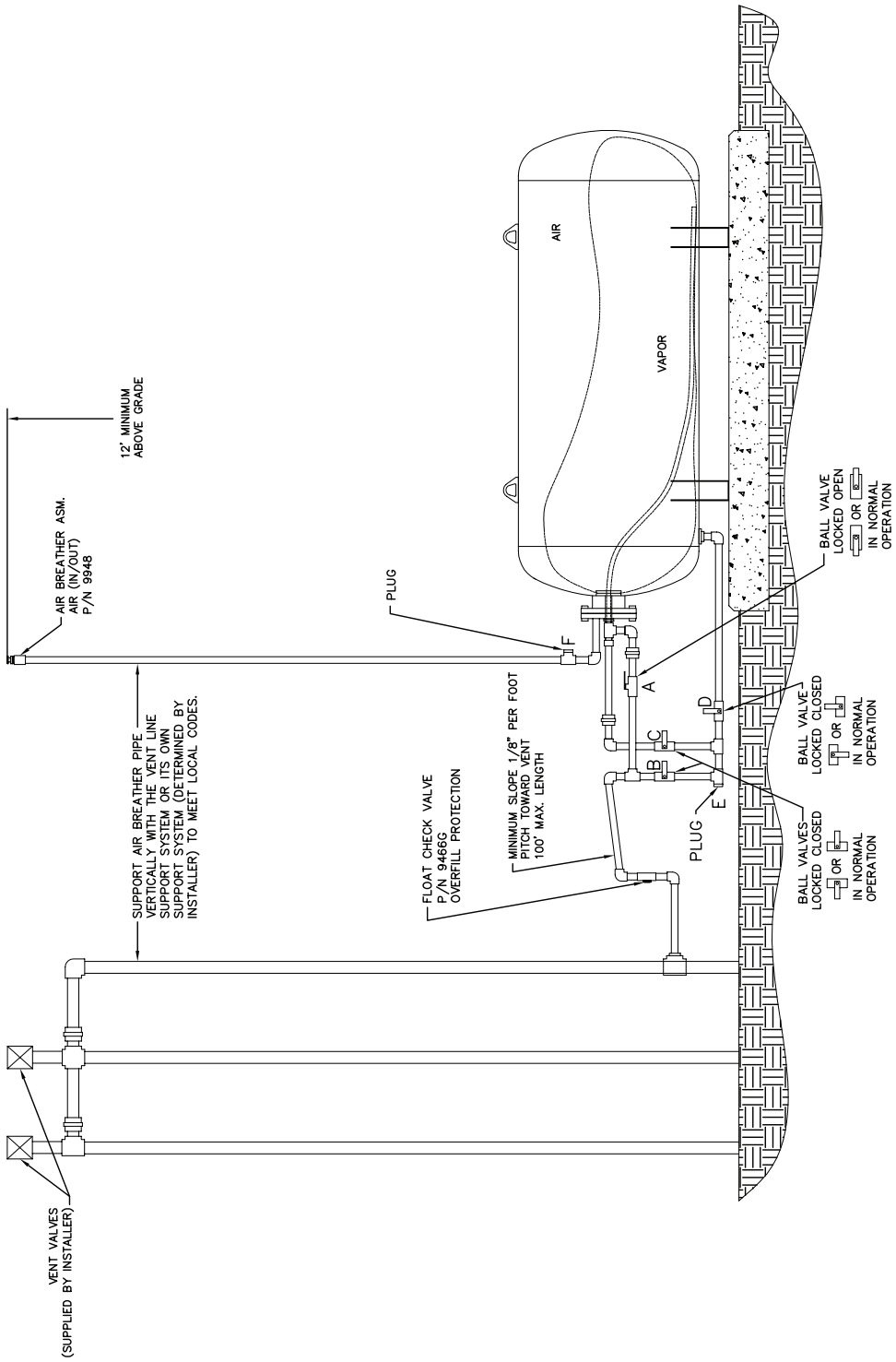

**Executive Order VR-201-M**
**Healy Phase II EVR System**
**Not Including ISD**

**Exhibit 2**
**Figure 2B-5**
**Typical Installation of a Three P/V Vent Valve Parallel Manifold with Healy Clean Air Separator**

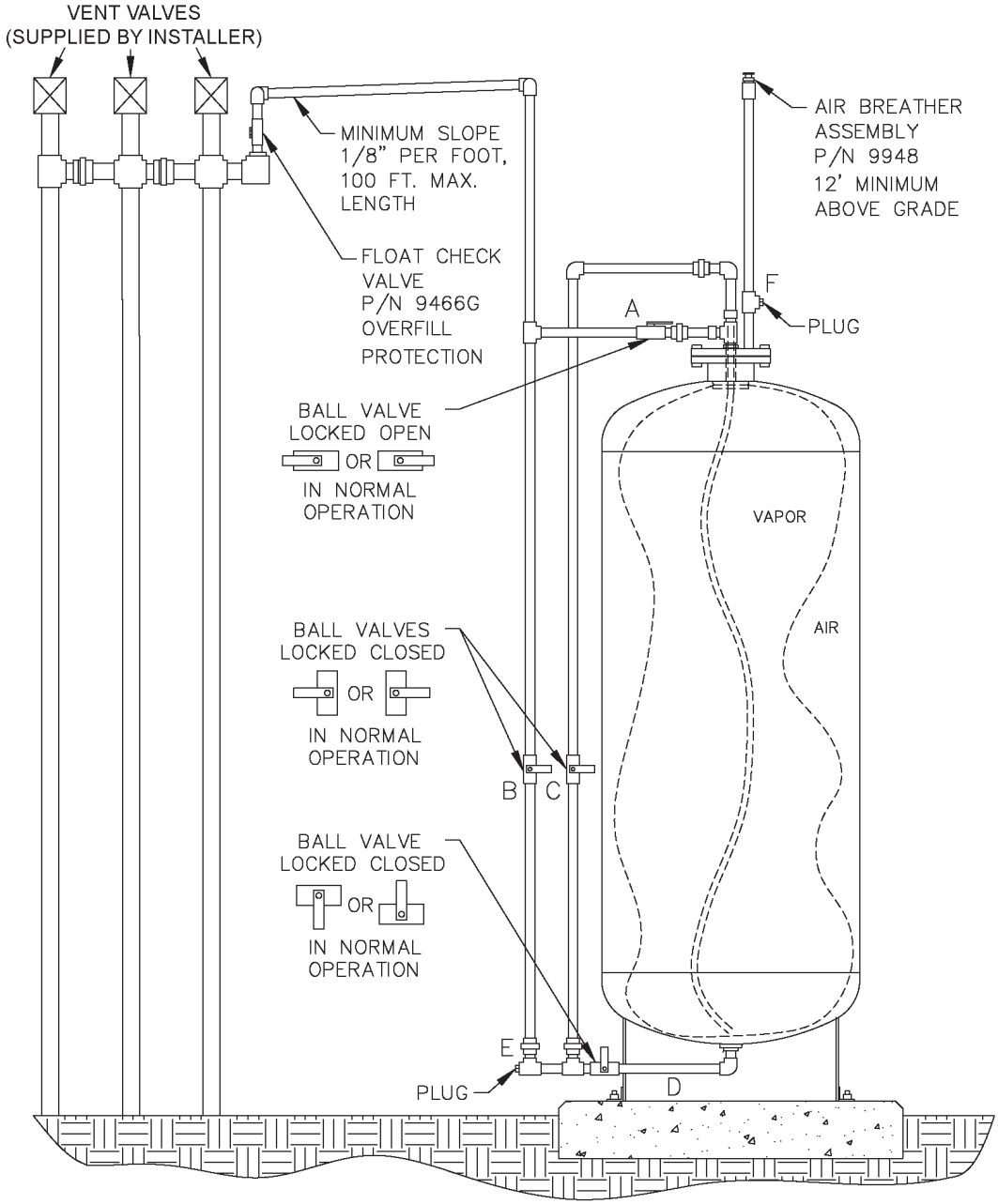

# Executive Order VR-201-M
# Healy Phase II EVR System
# Not Including ISD

## Exhibit 2
## Figure 2B-5H
## Typical Installation of a Three P/V Vent Valve Parallel Manifold with Healy Clean Air Separator

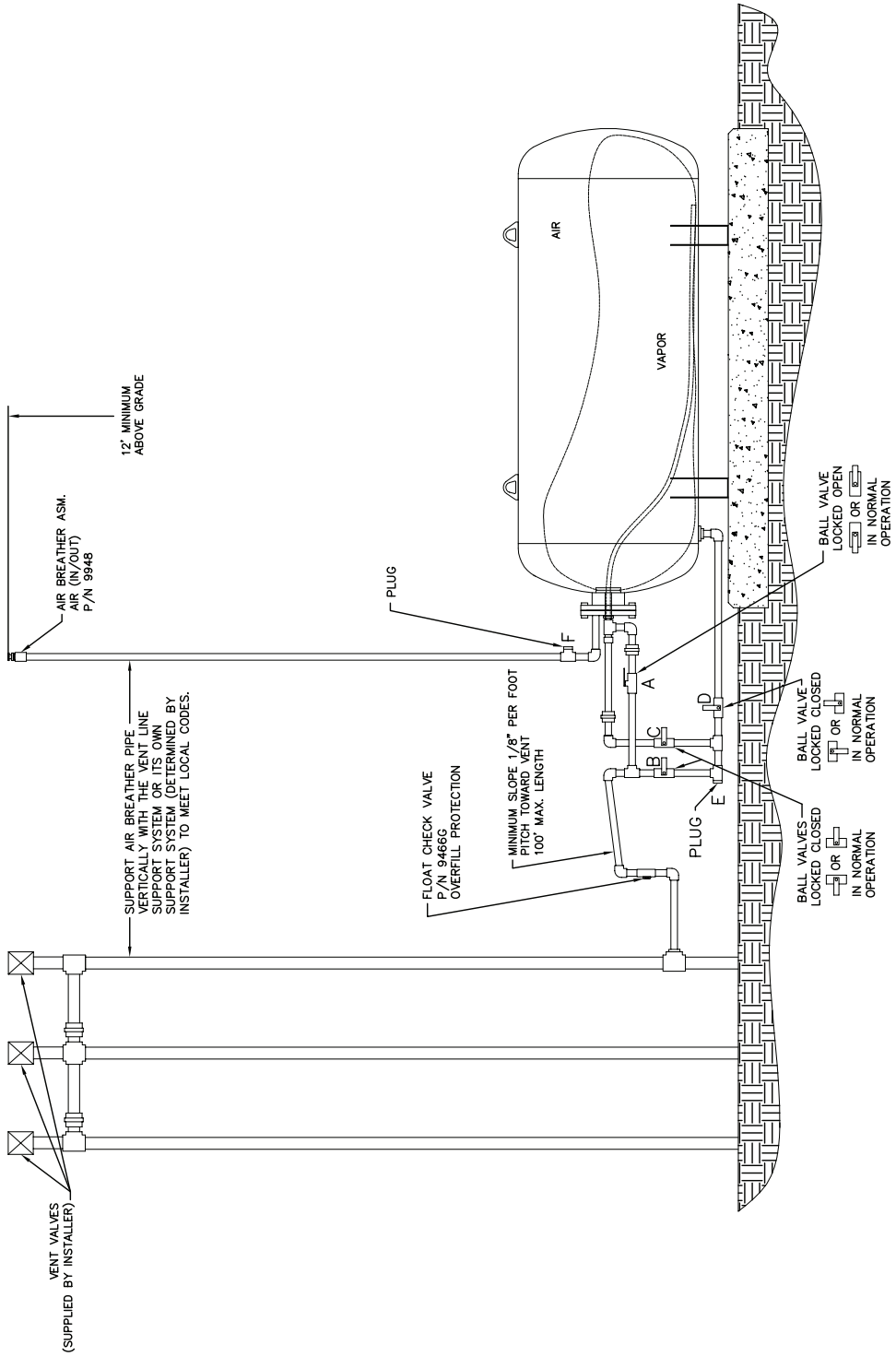

**Executive Order VR-201-M**
**Healy Phase II EVR System**
**Not Including ISD**

**Exhibit 2**
**Figure 2B-6**
**Typical Configuration of a P/V Vent Valve Mounted on a Single 3” Vent Line with the Clean Air Separator**

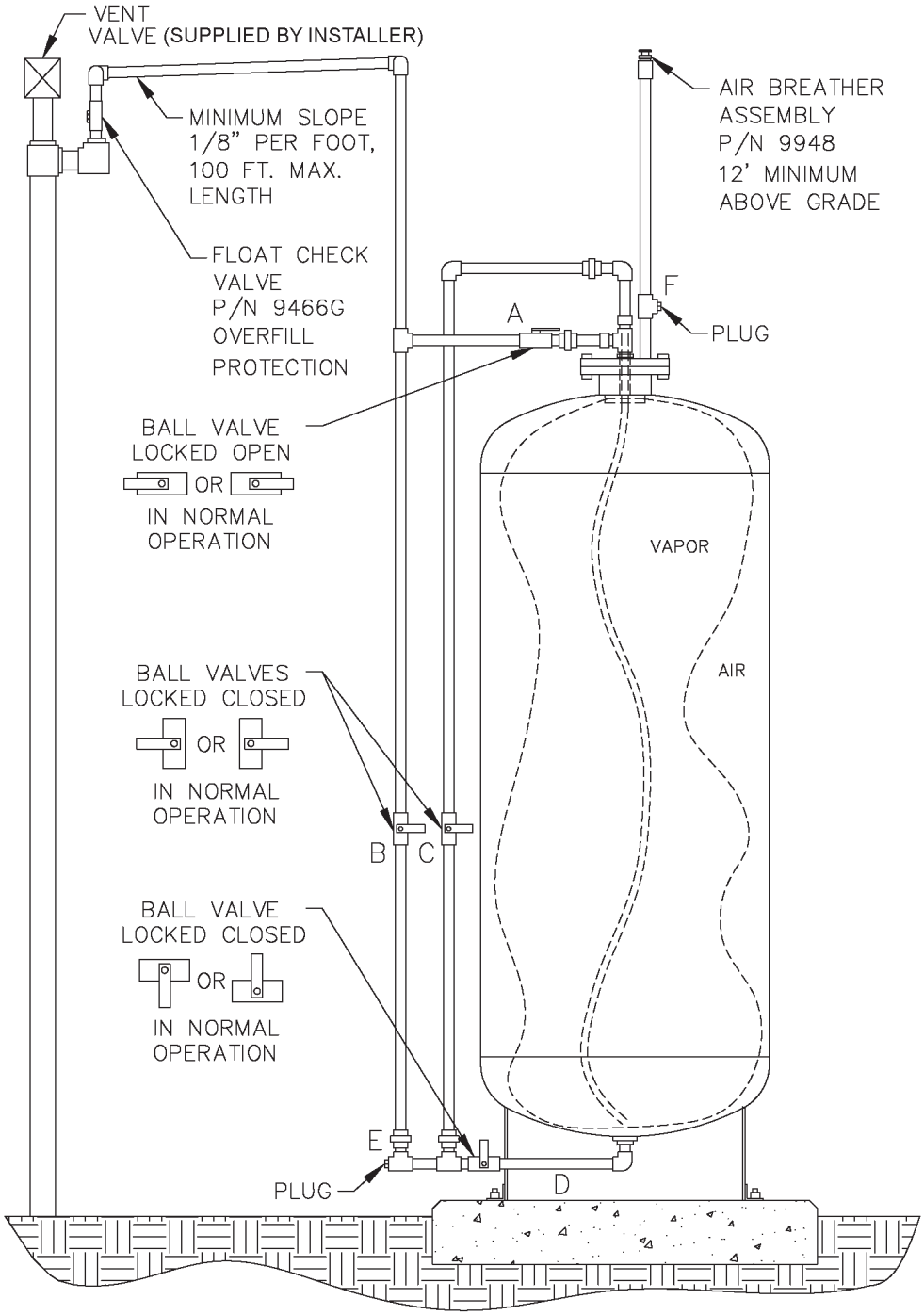

**Executive Order VR-201-M**
**Healy Phase II EVR System**
**Not Including ISD**

**Exhibit 2**
**Figure 2B-6H**
**Typical Configuration of a P/V Vent Valve Mounted on a Single 3” Vent Line with the Clean Air Separator**

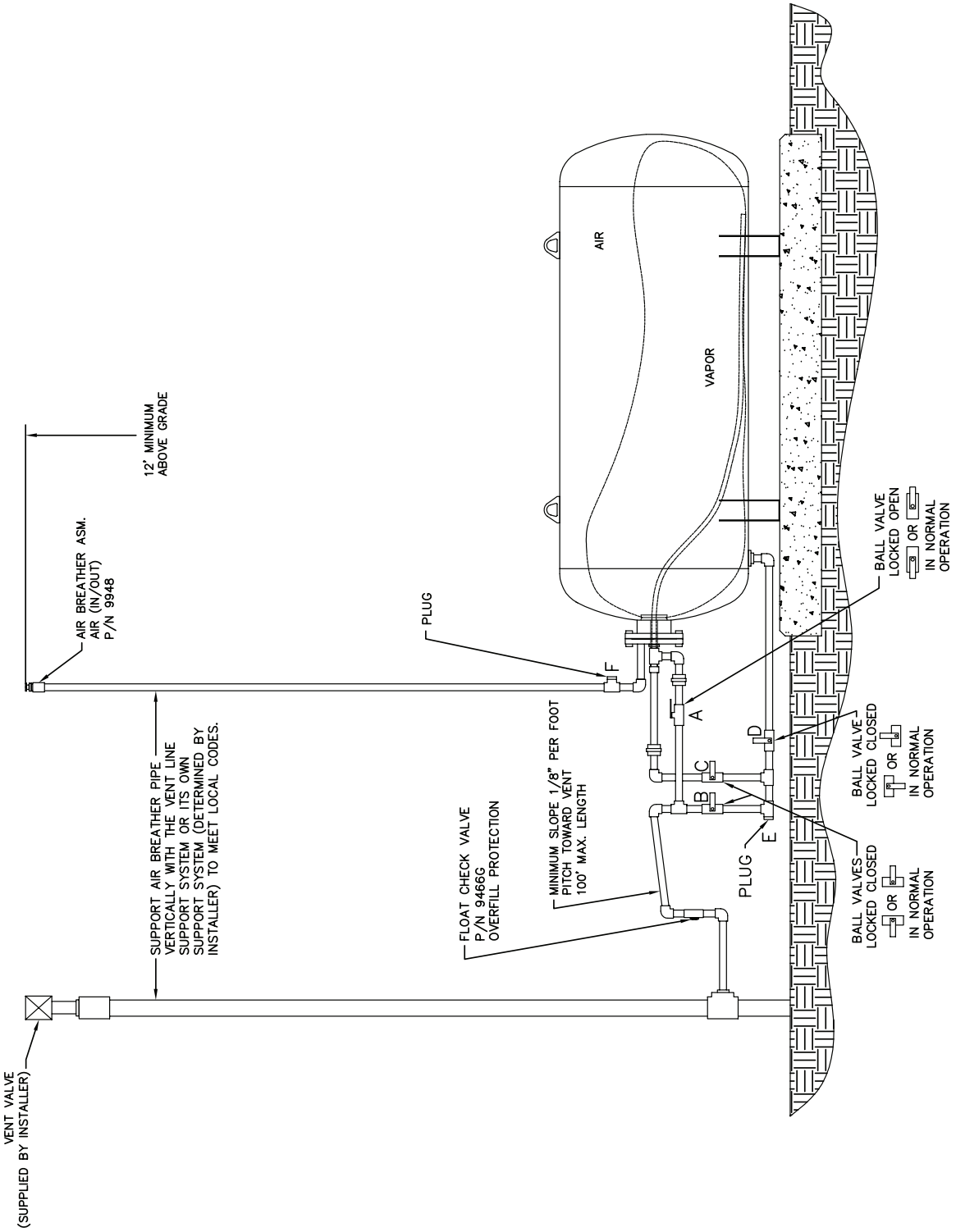

**Executive Order VR-201-M**
**Healy Phase II EVR System**
**Not Including ISD**

**Exhibit 2**
**Figure 2B-7**
**Example of a GDF Maintenance Record**

| Date of Maintenance/ Test/Inspection/Failure/y (including date and time of maintenance call) | Repair Date To Correct Test Failure | Maintenance/Test/Inspection Performed and Outcome | Affiliation | Name and Technician ID number of Individual Conducting Maintenance or Test | Telephone Number |
|---|---|---|---|---|---|
| | | | | | |
| | | | | | |
| | | | | | |
| | | | | | |
| | | | | | |
| | | | | | |
| | | | | | |
| | | | | | |
| | | | | | |
| | | | | | |

**Executive Order VR-201-M**
**Healy Phase II EVR System**
**Not Including ISD**

**Exhibit 3**

**Manufacturing Performance Standards and Specifications**

The Healy Phase II EVR System and all components shall be manufactured in compliance with the performance standards and specifications in CP-201 (amended May 25, 2006), as well as the requirements specified in this Executive Order. All components (Exhibit 1) shall be manufactured as certified; no change to the equipment, parts, design, materials or manufacturing process shall be made unless approved in writing by the Executive Officer or Executive Officer delegate. Unless specified in Exhibit 2 or in the ***ARB Approved Installation, Operation and Maintenance Manual***, the requirements of this section apply to the manufacturing process and are not appropriate for determining the compliance status of a gasoline dispensing facility.

## 1. NOZZLES

Every nozzle shall be tested at the factory. Every nozzle shall have affixed to it a card or label stating the performance specifications listed below, and a statement that the nozzle was tested to, and met, the following specifications.

a. The nozzle vapor valve leak rate shall not exceed 0.038 cubic feet per hour (CFH) at a pressure of +2 inches $H_2O$ when tested in accordance with the latest version of TP-201.2B.

b. The nozzle vapor valve leak rate shall not exceed 0.10 CFH at a vacuum of -100 inches $H_2O$ when tested in accordance with the latest version of TP-201.2B.

c. The nozzle automatic shut off feature is tested at all service clip settings (either two or three) as well as handheld in accordance with Under Writers Laboratories (UL) Standard 842.

d. The nozzle is tested in accordance with the California Department of Food and Agriculture Division of Measurement Standards Article 2 (DMS 6-6-97).

e. The nozzle is manufactured to the specifications that passed all tests conducted during the ARB certification for the following:

TP-201.2C - Spillage from Phase II Systems
TP-201.2D - Post Fueling Drips From Nozzles
TP-201.2E - Gasoline Liquid Retention in Nozzles and Hoses

f. The nozzle is manufactured to meet the Vapor to Liquid Ratio as specified in Exhibit 2.

g. The terminal end of each nozzle shall be manufactured in accordance with the specifications referenced in Section 4.7.3 of CP-201.

**2. INVERTED COAXIAL HOSES**

a. Every inverted coaxial hose is tested for continuity and pressure tests in accordance with UL Standard 330.

**3. HOSE ADAPTORS**

a. Every hose adaptor is tested for continuity and pressure tests in accordance with UL Standard 567.

**4. RECONNECTABLE BREAKAWAY COUPLINGS**

a. Every reconnectable breakaway coupling is tested for continuity and pressure tests in accordance with UL Standard 567.

**5. FLOW LIMITERS**

a. Every flow limiter is tested to 50 pounds per square inch (psi) liquid pressure to verify maximum gasoline flow rate limited to 10.0 gpm.

**6. VP1000 VACUUM PUMPS**

a. Every vacuum pump is pressure tested in accordance with UL Standard 79.

b. Every vacuum pump is manufactured to the exact specifications that passed all tests conducted during the ARB certification.

c. Every MC100 control module is tested in the factory to verify proper operation.

## 7. TANK PRESSURE MANAGEMENT SYSTEM

a. The Clean Air Separator tank is designed, constructed, tested, inspected and stamped per the American Society of Mechanical Engineers (ASME) Code Section VIII, Division 1, 2001 Edition, 2003 Addendum.

b. Every Clean Air Separator bladder is performance and pressure tested using the **Clean Air Separator Performance Test** to ensure its integrity.

**Exhibit 4**

**Determination of Static Pressure Performance of the Healy Clean Air Separator**
(Executive Orders VR-201-M and VR-202-M)

## 1 APPLICABILITY

Definitions common to all certification and test procedures are in:

**D-200 Definitions for Vapor Recovery Procedures**

For the purpose of this procedure, the term "ARB" refers to the California Air Resources Board, and the term "ARB Executive Officer" refers to the Executive Officer of the ARB or his or her authorized representative or designate.

1.1 This test procedure is used to quantify the vapor tightness of the Healy Clean Air Separator (CAS) pressure management system installed as part of a gasoline dispensing facility (GDF) under either Executive Order VR-201-M or VR-202-M.

## 2 PRINCIPLE AND SUMMARY OF TEST PROCEDURE

2.1 The Clean Air Separator, while isolated from the vapor recovery system, is evaluated for vapor integrity using a vacuum decay procedure. The vacuum decay after 5 minutes is compared with an allowable value. The allowable value is based upon the initial vacuum level when conducting the test using the table provided in this test procedure.

2.2 A positive pressure decay procedure is included that conducts the same evaluation as the vacuum decay but with positive pressure. This test is conducted if there is insufficient vacuum (not greater than – 2.00" wc) to conduct the vacuum decay. Districts have the authority to specify in the permit conditions that this positive pressure test is to be conducted even if the vacuum test has been conducted.

## 3 RANGE

3.1 The full-scale range of the electronic measuring device shall not exceed 0-20.00" wc with a minimum accuracy of not less than 0.25 percent of full-scale.

## 4 INTERFERENCES

4.1 Leaks in the piping for the Clean Air Separator could bias the test results toward non-compliance.

4.2 Introduction of gaseous nitrogen into the system at flow rates exceeding 4 CFM (240 CFH) may bias the results of the test toward non-compliance. Only gaseous nitrogen shall be used to conduct this test.

4.3 Pressurizing the Clean Air Separator bladder greater than 14.00” wc could damage the bladder, biasing the test toward non-compliance.

4.4 Thermal Bias for Electronic Manometers

Electronic manometers shall have a warm-up period of at least 15 minutes followed by a drift check of 5 minutes. If the drift exceeds 0.01” wc, the instrument should not be used.

## 5 APPARATUS

5.1 Nitrogen

Use commercial grade gaseous nitrogen in a high pressure cylinder, equipped with a two-stage pressure regulator.

5.2 Pressure Measurement Device

Use an electronic pressure measurement device to monitor the pressure decay in the Clean Air Separator. The pressure measurement device shall, at a minimum, be readable to the nearest 0.01” wc.

5.3 Test Port Assembly

Use a test port assembly constructed similar to the one in Figure A. The assembly should have an 8 oz. Pressure Relief valve, to ensure that the Clean Air Separator is not over pressurized. The Model 9968 Clean Air Separator Test Port Assembly can be purchased from Healy Systems, Inc.

Figure A

Clean Air Separator Test Port Assembly

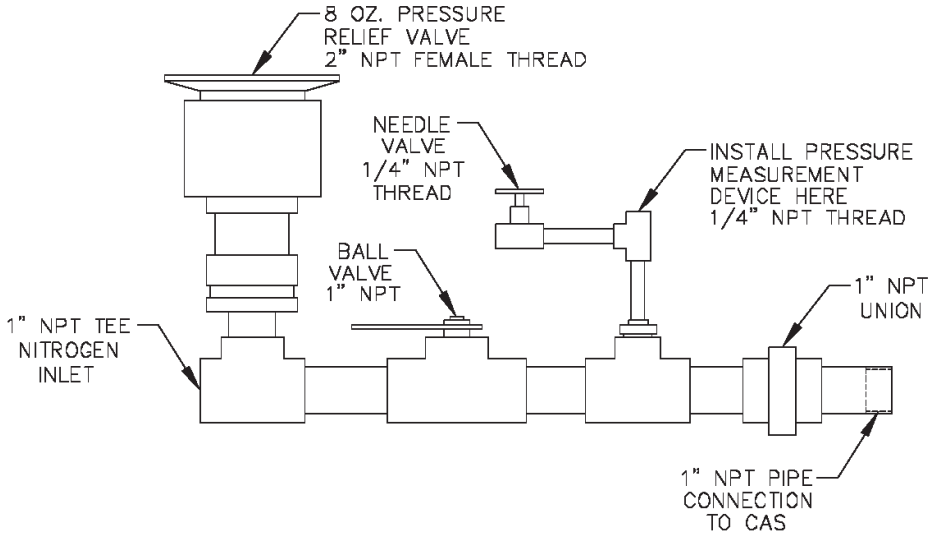

5.4 Stopwatch

Use a stopwatch accurate to within 0.2 seconds.

5.5 Flow Meter

Use a flow meter to determine the required pressure setting of the delivery pressure gauge on the nitrogen supply pressure regulator. This pressure shall be set such that the nitrogen flow rate is between 2.0 CFM (120 CFH) and 4.0 CFM (240 CFH).

5.6 Leak Detection Solution

Any liquid solution designed to detect vapor leaks may be used to verify the pressure integrity of the test equipment prior to conducting the test.

5.7 Condensate Collection Vessel

A container approved for use with gasoline that can hold at least a half gallon of material.

5.8 Graduated Cylinder

A graduated cylinder suitable for use with gasoline capable of measuring to the nearest ounce or mL.

## 6 PRE-TEST PROCEDURES

6.1 The following safety precautions shall be followed:

6.1.1 Only gaseous nitrogen shall be used to pressurize the system.

6.1.2 An 8 oz. pressure relieve valve shall be installed on the Test Port Assembly to prevent the possible over-pressurizing of the Clean Air Separator.

6.1.3 A ground strap should be employed during the introduction of nitrogen into the system.

6.2 There shall be no Phase I bulk product deliveries into or out of the gasoline storage tank(s) within the three (3) hours prior to the test or during the performance of this test procedure.

6.3 All pressure measuring device(s) shall be bench calibrated using a reference standard. Calibration shall be performed at 20, 50, and 80 percent of full scale. Accuracy shall be within two percent at each of these calibration points.

Calibrations shall be conducted on a frequency not to exceed 180 days. Calibration documentation shall be maintained with the equipment at all times.

6.4 Use the flow meter to determine the nitrogen regulator delivery pressures that correspond to nitrogen flow rates of 2.0 CFM (120 CFH) and 4.0 CFM (240 CFH). These pressures define the allowable range of delivery pressures acceptable for this test procedure. The flow meter shall be connected in-line between the nitrogen supply regulator and the Test Port Assembly during pressurization. The flow meter may be connected in-line between the nitrogen supply regulator and the Test Port Assembly during the test.

6.5 The electronic pressure measurement device shall be subject to warm-up and drift check before use; see Section 4.5.

6.6 The four ball valves used in the installation of the Clean Air Separator are lockable and shall be locked in the position shown in Figure 2B-2 or 2B-2H of Exhibit 2 and in Figure 1 or Figure 1H of this Exhibit during normal operation. Figure 1 and 2B-2 apply to vertical CAS installations and Figure 1H and 2B-2H apply to horizontal CAS installations. The four padlocks provided by Healy Systems, Inc. in their installation kit are keyed the same. However, it is possible that one or more of the padlocks on the Clean Air Separator could have been replaced (seizing, damage, broken key, etc.). Conducting this test will require a set of keys necessary to unlock all padlocks.

6.7 Verify that the Clean Air Separator is in its normal operating configuration by confirming that all components are as indicated (See Figure 1 or Figure 1H):

Valve “A” - Open
Valve “B, C and D” - Closed
Pipe End “E” - Plugged
Tee Branch “F” - Plugged

Figure 1

Normal Clean Air Separator Operating Configuration

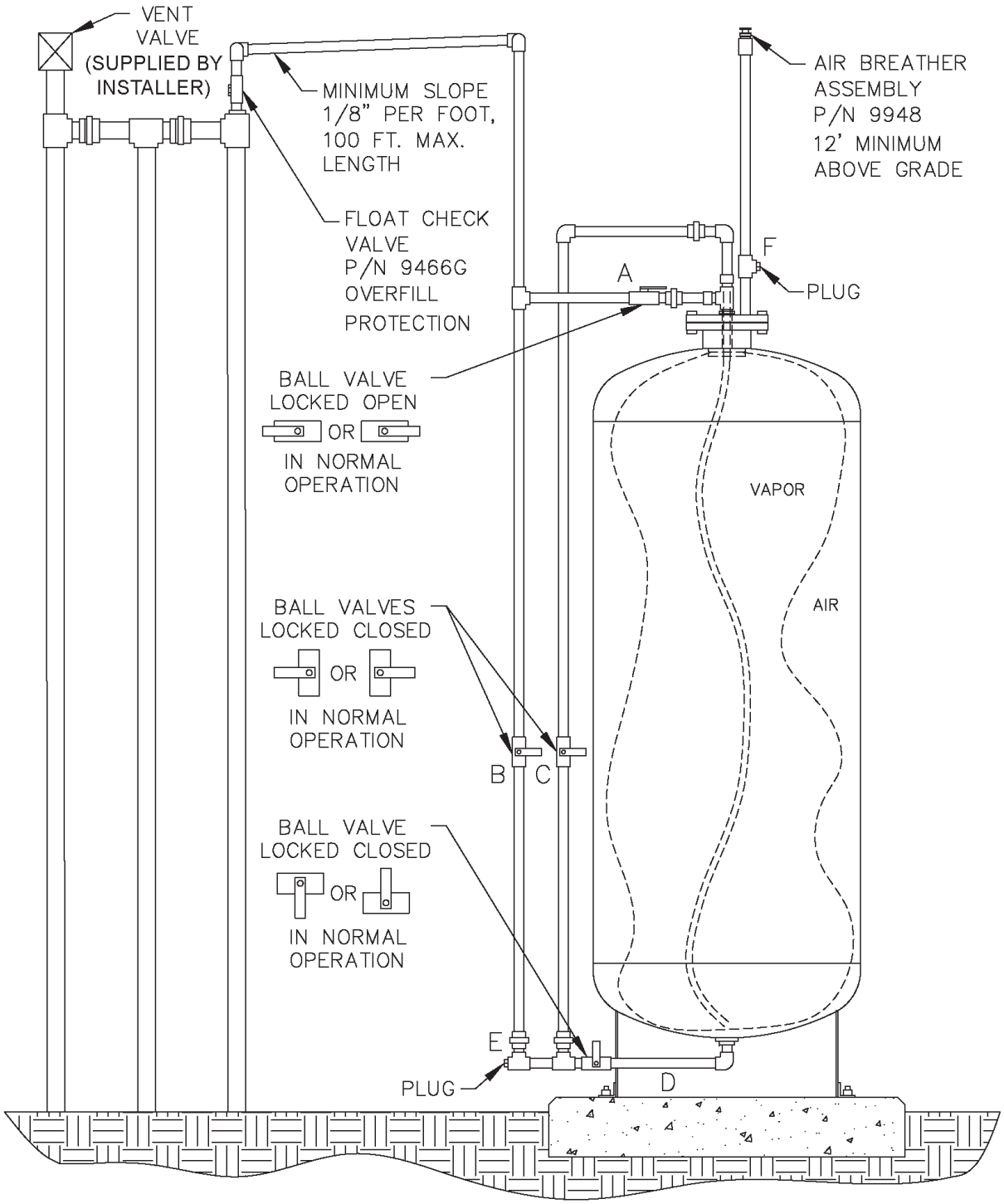

Figure 1H

Normal Clean Air Separator Operating Configuration

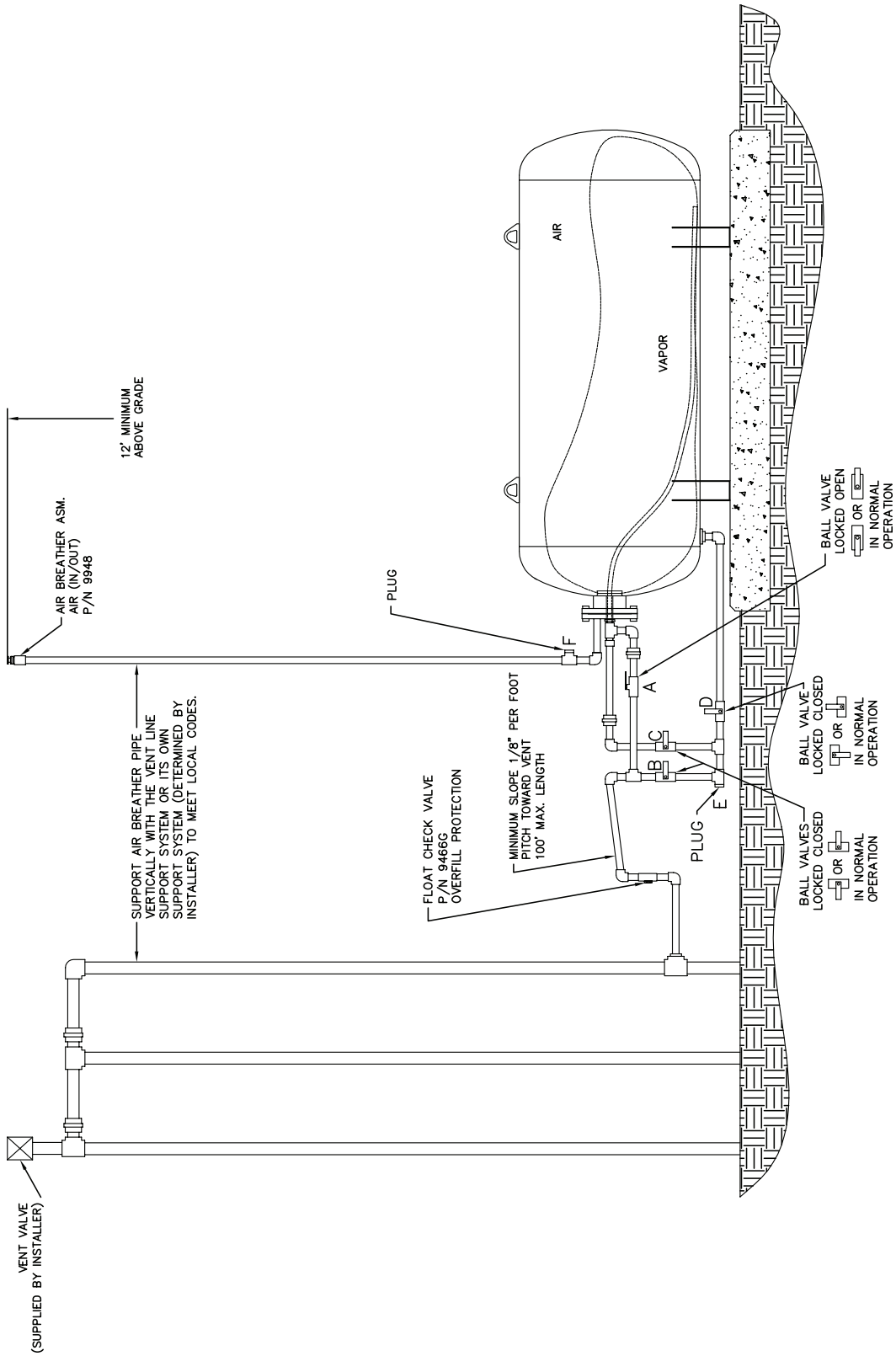

6.8 Installing the Test Port Assembly

6.8.1 Open the ball valve marked “B”, shown in Figure 1 or Figure 1H. This ensures that if there is any condensate in the primary connection line to the Clean Air Separator it will drop down into the lower section of the piping configuration, so that it can be measured. Close the valve after approximately 30 seconds.

6.8.2 Position the condensate collection vessel below plug “E” prior to removing it. Remove the 1” plugs from locations “E” and “F” from Figure 1 or Figure 1H. Transfer the collected condensate into the graduated cylinder. If there is more than 16 oz. (473 mL) of liquid condensate, the bladder and vapor processor vessel must be drained. Conduct the bladder and vessel draining procedures from the Clean Air Separator section of the ***ARB Approved Installation, Operation and Maintenance Manual***.

Note: Depending upon the size of the graduated cylinder and the amount of condensate, it may take multiple transfers from the condensate collection vessel to get the total condensate measurement.

6.8.3 Install the Test Port Assembly to the Clean Air Separator at location “E”. See Figure 2 or Figure 2H. Figure 2 applies to vertical CAS installations and Figure 2H applies to horizontal CAS installations.

6.8.4 Connect the gaseous nitrogen supply to the Test Port Assembly. See Figure 2 or Figure 2H.

6.8.5 Check the test equipment and piping isolated from normal Clean Air Separator operation by the ball valves “B, C and D” by pressurizing with nitrogen to a pressure of 4” wc ± 1” wc and closing the ball valve on the Test Port Assembly. Use leak detection solution. Tighten as necessary. The test equipment shall have no leaks.

6.8.6 Open the needle valve on the Test Port Assembly to bleed the pressure off the equipment. Keep ball valve on Test Port Assembly closed.

Figure 2

Clean Air Separator in Configuration to Conduct Test

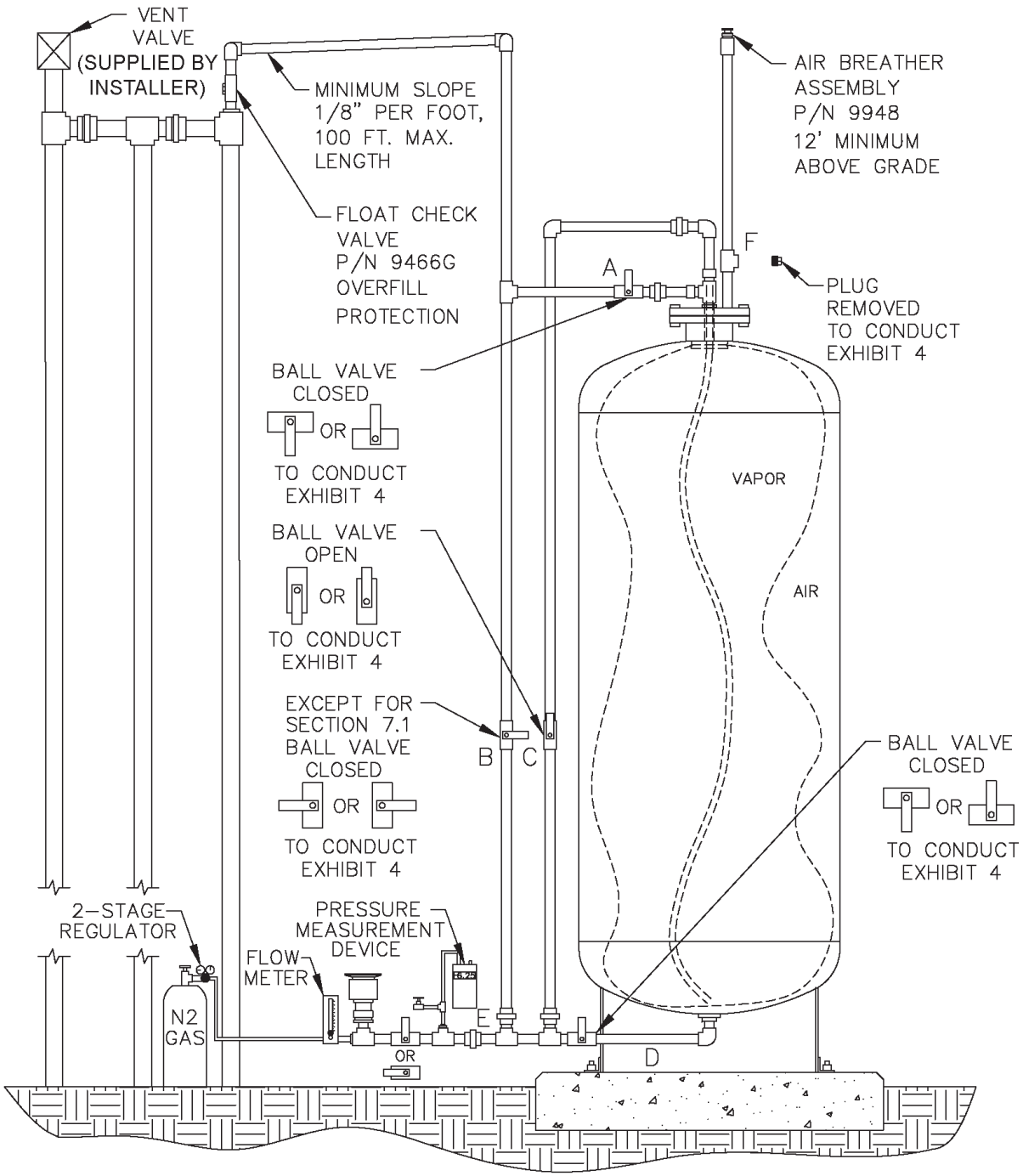

Figure 2H

Clean Air Separator in Configuration to Conduct Test

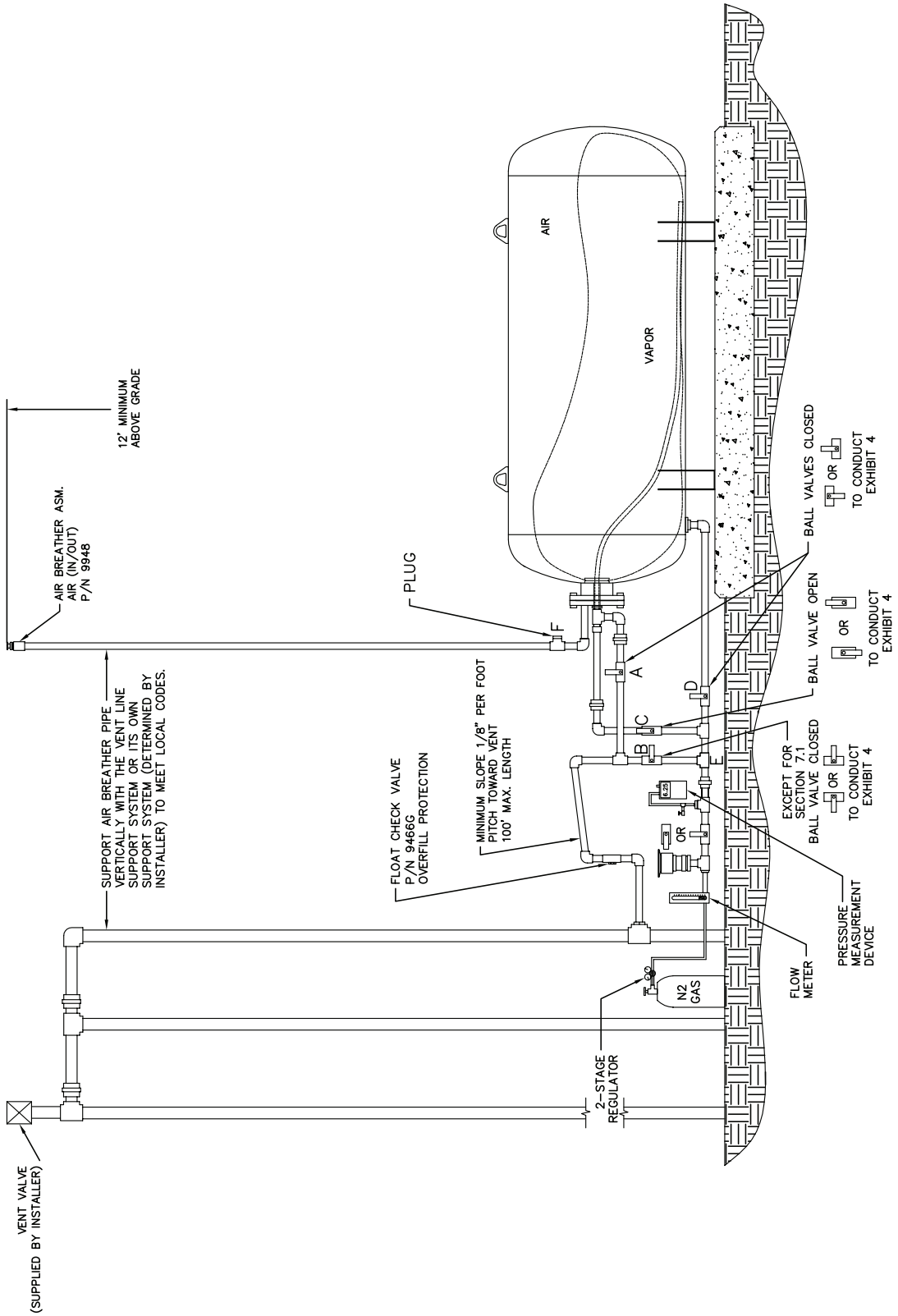

## 7 TESTING

7.1 Open the ball valve marked “B” from Figure 2 or Figure 2H. The pressure measurement device installed on the Test Port Assembly should now be reading UST and Clean Air Separator ullage pressure (or vacuum).

7.2 If the station vacuum is greater than (more negative) than -2.00” wc, then proceed to Section 7.2.1. If less than –2.00” wc, then proceed to Section 7.3:

7.2.1 Close the ball valves marked “A” and “B” from Figure 2.

7.2.2 Open the ball valve marked “C” from Figure 2 and wait one minute.

7.2.3 If necessary, use the needle valve on the Test Port Assembly to bleed air into the bladder until the vacuum level reaches as close to a whole number on the pressure measurement device as the accuracy of the device will provide (ie. -2.00, -3.00, -4.00, -5.00, -6.00, -7.00, -8.00). Make sure the needle valve is closed. Record this vacuum and start the stop watch to begin a 5 minute decay.

7.2.4 Record the vacuum at one-minute increments up to 5 minutes.

7.2.5 Using the information from Table 1, verify that the vacuum after 5 minutes is equal to or greater than the allowable minimum for the initial vacuum recorded from Section 7.2.3.

7.2.6 If the vacuum is greater than the allowable minimum, the Clean Air Separator passed the test.

7.2.7 If the vacuum is less than the allowable minimum, the Clean Air Separator failed the test.

TABLE 1
Allowable 5 Minute Vacuum Decay for Clean Air Separator

| Vacuum at Start of Test (inches wc) | Allowable Minimum Vacuum after 5 min. (inches wc) |
|---|---|
| 8.0 | 5.5 |
| 7.0 | 4.7 |
| 6.0 | 3.8 |
| 5.0 | 3.0 |
| 4.0 | 2.2 |
| 3.0 | 1.5 |
| 2.0 | 0.8 |

7.3 If the station vacuum is less than –2.00” wc (from Section 7.2), or at the direction of district (refer to Section 2.2), conduct the following:

7.3.1 Close the ball valves marked “A” and “B” from Figure 2.

7.3.2 Open the ball valve marked “C” from Figure 2.

7.3.3 Open the ball valve of the Test Port Assembly and flow nitrogen into the Clean Air Separator bladder at a flow rate between 2 and 4 CFM until the pressure in the bladder reaches 2.20” wc.

7.3.3.1 Depending upon the nitrogen flow rate used, the bladder could take up to 30 minutes to fill completely.

7.3.3.2 Because of the close proximity of the pressure measurement device to the nitrogen inlet of the Test Port Assembly, the pressure measurement device may read a higher pressure when nitrogen is flowing. The pressure measurement device is usually steady, but will start to increase rapidly when the bladder is getting full.

7.3.3.3 Periodically stopping nitrogen flow will provide an accurate reading of the pressure in the bladder.

7.3.4 Once the pressure reaches 2.20” wc, shut off the flow of nitrogen to the Clean Air Separator bladder and close the ball valve of the Test Port Assembly.

7.3.5 Wait 5 minutes or until pressure stabilizes above 2.00” wc. If the pressure does not stabilize, repeat steps 7.3.3 and 7.3.4.

7.3.6 Use the needle valve on the Test Port Assembly to bleed off the nitrogen until the pressure reaches 2.00” wc. Make sure the needle valve is closed. Record the pressure.

7.3.7 Start the stop watch to begin a 5 minute decay.

7.3.8 Record the pressure in one-minute increments up to 5 minutes.

7.3.9 If the pressure in the bladder is greater than 1.77” wc at the end of 5 minutes, then the Clean Air Separator passed the test.

7.3.10 If the pressure in the bladder is less than 1.77” wc at the end of 5 minutes, then the Clean Air Separator failed the test.

7.4 If the bladder was evaluated using the vacuum procedure (Section 7.2), close the ball valve “C” to keep it in a vacuum condition. If the bladder was evaluated using the pressure procedure (Section 7.3), open the needle valve on the Test Port Assembly to bleed off all pressure from the bladder.

7.5 Close the ball valve marked “C”, if not already done.

7.6 Remove the Test Port Assembly from location “E” and install the 1” pipe plug. Use a pipe sealant approved for use with gasoline on the threads and tighten to 60 ft-lbs.

7.7 Install the 1” pipe plug to location “F”. Use a pipe sealant approved for use with gasoline on the threads and tighten to 60 ft-lbs.

7.8 Open the ball valve marked “A”. Lock all ball valves using the padlocks.

7.9 The Clean Air Separator should now be in normal operation configuration. Verify this by using the outline from Section 6.7 and Figure 1 or Figure 1H.

## 8 REPORTING

8.1 Record test data on the form shown in Figure 3. Districts may require the use of an alternate form, provided that the alternate form includes the same minimum parameters as in Figure 3.

**Figure 3**

**Data Form for Determination of Static Pressure Performance of the Healy Clean Air Separator for Executive Orders VR-201-M and VR-202-M**

| SOURCE INFORMATION | |
|---|---|
| GDF Name and address<br>_____<br>_____<br>_____ | GDF Represenative and title<br>_____<br>_____<br>GDF Phone No.<br>_____ |
| Date and Time of Last Fuel Drop to GDF:<br>_____<br>Date of Last Calibration of Pressure Measurement Device: _____ | P/O #: _____<br>A/C#: _____<br>District Test Witness:<br>_____ |

| VACUUM TEST (Section 7.1 through 7.2.7) | |
|---|---|
| Vacuum at start of test, inches water column (7.2.3) | _____ |
| Vacuum at one minute, inches water column | _____ |
| Vacuum at two minutes, inches water column | _____ |
| Vacuum at three minutes, inches water column | _____ |
| Vacuum at four minutes, inches water column | _____ |
| Final vacuum at five minutes, inches water column | _____ |
| Allowable minimum vacuum, inches water column (from Table 1) | _____ |

| POSITIVE PRESSURE TEST (Section 7.3 through 7.3.9) | |
|---|---|
| Pressure at start of test, inches water column (7.3.6) | _____ |
| Pressure at one minute, inches water column | _____ |
| Pressure at two minutes, inches water column | _____ |
| Pressure at three minutes, inches water column | _____ |
| Pressure at four minutes, inches water column | _____ |
| Final pressure at five minutes, inches water column | _____ |
| Allowable final pressure, inches water column (7.3.9) | 1.77 |

| Healy Certified Technician Name, Certification Number and Expiration Date | Test Company | Date Test Conducted |
|---|---|---|
| | | |

## Exhibit 5

## Vapor to Liquid Volume Ratio
(Executive Orders VR-201-M and VR-202-M)
(Healy Model 900 EVR Nozzle)

Definitions common to all certification and test procedures are in:

**D-200 Definitions for Vapor Recovery Procedures**

For the purpose of this procedure, the term "ARB" refers to the California Air Resources Board, and the term "Executive Officer" refers to the ARB Executive Officer, or his or her authorized representative or designate.

### 1. PURPOSE AND APPLICABILITY

**1.1** This test procedure is used to quantify the Vapor to Liquid (V/L) Volumetric Ratio of the Healy Model 900 EVR Nozzle installed at gasoline dispensing facilities (GDF). This procedure provides a method to determine compliance with the V/L requirements specified in ARB Executive Orders (EO) VR-201-M and VR-202-M.

### 2. PRINCIPLE AND SUMMARY OF TEST PROCEDURE

**2.1** A tight fitting adaptor is placed on the spout of a dispensing nozzle. The adaptor, which isolates vapor flow to the nozzle vapor collection ports, is connected to a volume gas meter. Gasoline is dispensed through the nozzle and the volume of vapors drawn through the vapor collection boot by the Phase II system vacuum pump is measured. The volume of vapor is recorded and compared with the volume of gasoline dispensed to determine the V/L Volumetric Ratio.

**2.2** The test is conducted with the pressure/vacuum (P/V) vent valve(s) installed on the storage tank vent pipes.

**2.3** The test procedure requires no modifications to the GDF being evaluated.

**2.4** The test procedure may be conducted on a fueling point on one side of the dispenser with the other side of the dispenser either authorized to dispense fuel (but not dispensing), or with the other side dispensing fuel into a vehicle or another portable test tank. Conducting the test this way will be evaluating the V/L of the fueling point with the VP1000 vacuum pump running on its high speed setting.

### 3. BIASES AND INTERFERENCES

**3.1** Nozzle spouts that are damaged such that the V/L adaptor cannot fit over the nozzle spout preclude the use of this test.

**3.2** Refueling points not capable of achieving dispensing rates (see Equation 9-2) required for conducting the V/L test, as specified in Exhibit 2 of ARB Executive Orders VR-201-M and VR-202-M, preclude the use of this test for determining in-use compliance of certified systems.

**3.3** Bagging, or otherwise sealing any nozzle associated with the vacuum pump serving the nozzle being tested, may bias the test results towards compliance. **The V/L test to verify compliance shall be conducted without "bagging" any of the nozzles served by a common vacuum device.**

**3.4** If the nozzle being tested introduces liquid into the V/L adaptor, gas volume meter or the adaptor supply hose, the V/L of that nozzle shall be deemed a failure of the V/L standard.

**3.5** Do not drain or remove liquid in either the vapor passage of the hoses or the dispenser vapor piping prior to performing the test. Draining of this liquid gasoline will bias the test toward compliance.

**3.6** The O-ring in the V/L adaptor that is not properly lubricated may bias the results toward noncompliance. See Section 5.7 for lubrication requirements. Motor oil (any weight) is acceptable for lubricating the O-ring. Contact Healy Technical Services with any questions about other lubricants that may be used in conducting this test.

**3.7** Conducting V/L testing with an improperly conditioned portable test tank (not saturated with gasoline vapors) will bias the test results of the as found V/L of the fueling point. Refer to Section 6.6 for proper portable test tank conditioning.

## 4. SENSITIVITY, RANGE, AND ACCURACY

**4.1** The maximum rated capacity of the gas volume meter shall be at least 800 CFH and not greater than 3,000 CFH.

**4.2** The minimum rated capacity of the gas volume meter shall be 25 CFH.

**4.3** The minimum readability of the gas volume meter shall be 0.01 cubic feet.

**4.4** Accuracy, determined during calibration, will be $\pm$ 5 percent of the gas volume meter reading.

## 5. EQUIPMENT

### 5.1 Vapor to Liquid Adaptor and Surrogate Spout

A **Vapor to Liquid Adaptor**. Only the Healy Systems, Inc. V/L Test Sleeve (figures 1, 4 and 5), Part No. 8034-1, can be used to conduct V/L testing on the Healy Phase II EVR System (Executive Order VR-201 series or Executive Order VR-202 series). The nominal inside diameter of the flexible tubing shall be between 0.75 and 1.00 inches, and the length of the tubing shall be between 3.0 and 6.0 feet.

B **Surrogate Spout**. Only the Healy Systems, Inc. V/L Surrogate Spout (figures 1 and 5), Part No. 8175, can be used to conduct the pre-test and post-test leak check.

**5.2 Gas Volume Meter**. Use a gas volume meter to measure the volumetric flow rate through the V/L adaptor. The meter shall be equipped as shown in Figure 2 and the maximum allowable pressure drop(s) (determined by the manufacturer) across the meter shall be:

For a meter with a maximum rated capacity of 1000 CFH through 3,000 CFH:
1.10 inches $H_2O$ at a flowrate of 3,000 CFH
0.05 inches $H_2O$ at a flowrate of 30 CFH

For a meter with a maximum rated capacity of 800 to 1,000 CFH:
0.70 inches $H_2O$ at a flowrate of 800 CFH
0.04 inches $H_2O$ at a flowrate of 16 CFH

See Section 6.2 for further gas volume meter specifications.

**5.3 Volume Gas Meter Inlet Manifold**. This manifold is designed to return the vapors displaced from the portable gasoline tank assembly, at atmospheric pressure, to the inlet of the gas volume meter. This manifold shall be two (2.0) inches minimum inside diameter pipe. The intake passage of the manifold shall be no shorter than 6.0 inches and no longer than 18.0 inches. See Figures 2 and 4.

**Figure 1**

**Healy Vapor To Liquid (V/L) Adaptor and Surrogate Spout Assembly**

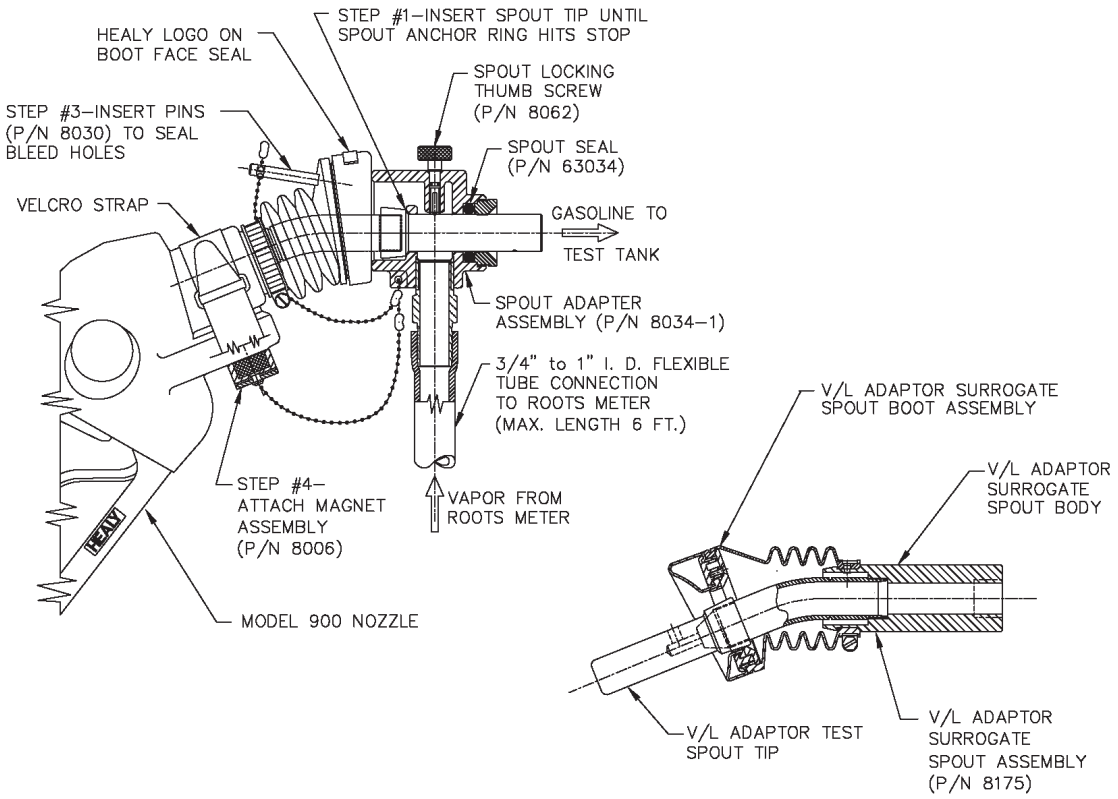


**NOTE: The thumbscrew and Healy logo on top of the nozzle boot face seal must be in vertical alignment to imitate fueling an unleaded vehicle.**

**Figure 2**

**Gas Volume Meter and Vapor To Liquid Adaptor**

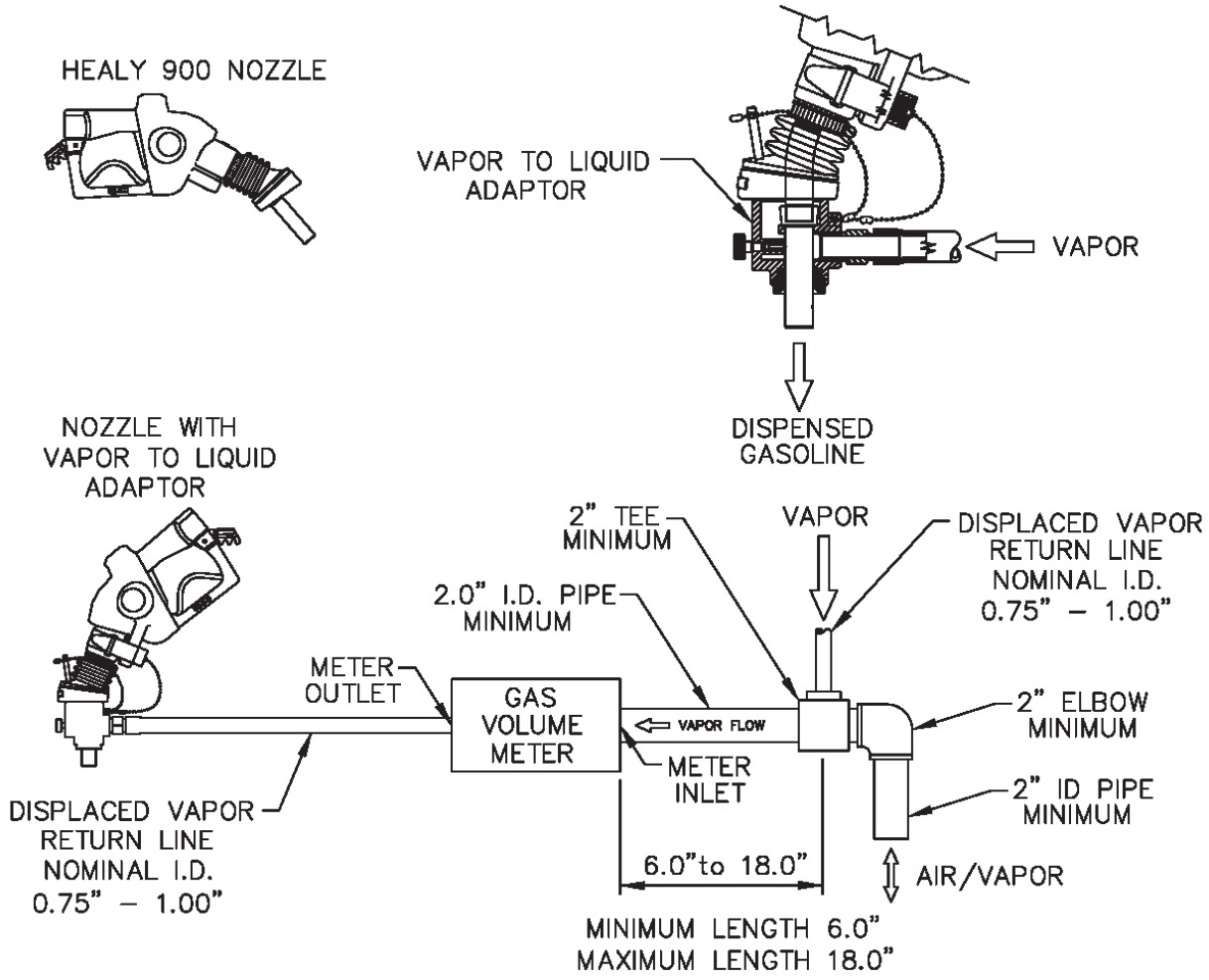

**5.4 Liquid Volume Meter**. Use the totalizer on the gasoline dispenser to measure the volume of gasoline dispensed during the test.

**5.5 Portable Gasoline Tank Assembly**. A portable tank, meeting fire safety requirements for use with gasoline, shall be used to receive the gasoline dispensed during this test. The tank shall have sufficient volume so that at least 4.5 gallons may be dispensed prior to activating the primary shutoff mechanism of the dispensing nozzle. Portable tanks shall have a permanent label or mark indicating the total fuel capacity in gallons. Tank material, likely to provide contact with the nozzle spout, or V/L adaptor, during the entire dispensing event, shall be constructed of aluminum or brass or other materials approved by the local fire codes for such application. The tank and required plumbing configuration is shown in Figure 3 and Figure 4. This configuration permits a portion of the vapors displaced during testing to be returned to the underground storage tank (UST). The minimum and maximum dimensions shown in Figure 2 and Figure 4 shall be adhered to in all cases.

**5.6 Stopwatch**. Use a stopwatch accurate to within 0.2 seconds.

**5.7 Lubricant**. Appropriate lubricant shall be used to ensure a leak-tight seal between the O-ring in the V/L adaptor and the nozzle spout. Motor oil (any weight) is acceptable for lubricating the O-ring. Contact Healy Technical Services with any questions about other lubricants that may be used in conducting this test.

**5.8 Leak Detection Solution**. Any liquid solution designed to detect gaseous leaks may be used to verify the pressure integrity of test equipment during this test.

**5.9 Pressure Measuring Device.** An electronic pressure measuring device with a full scale range that shall not exceed 0-10 inches WC with a minimum accuracy of 0.5 percent of full scale. A 0-20 inches WC device may be used provided the minimum accuracy is 0.25 percent of full-scale.

Figure 3

Portable Tank Assembly

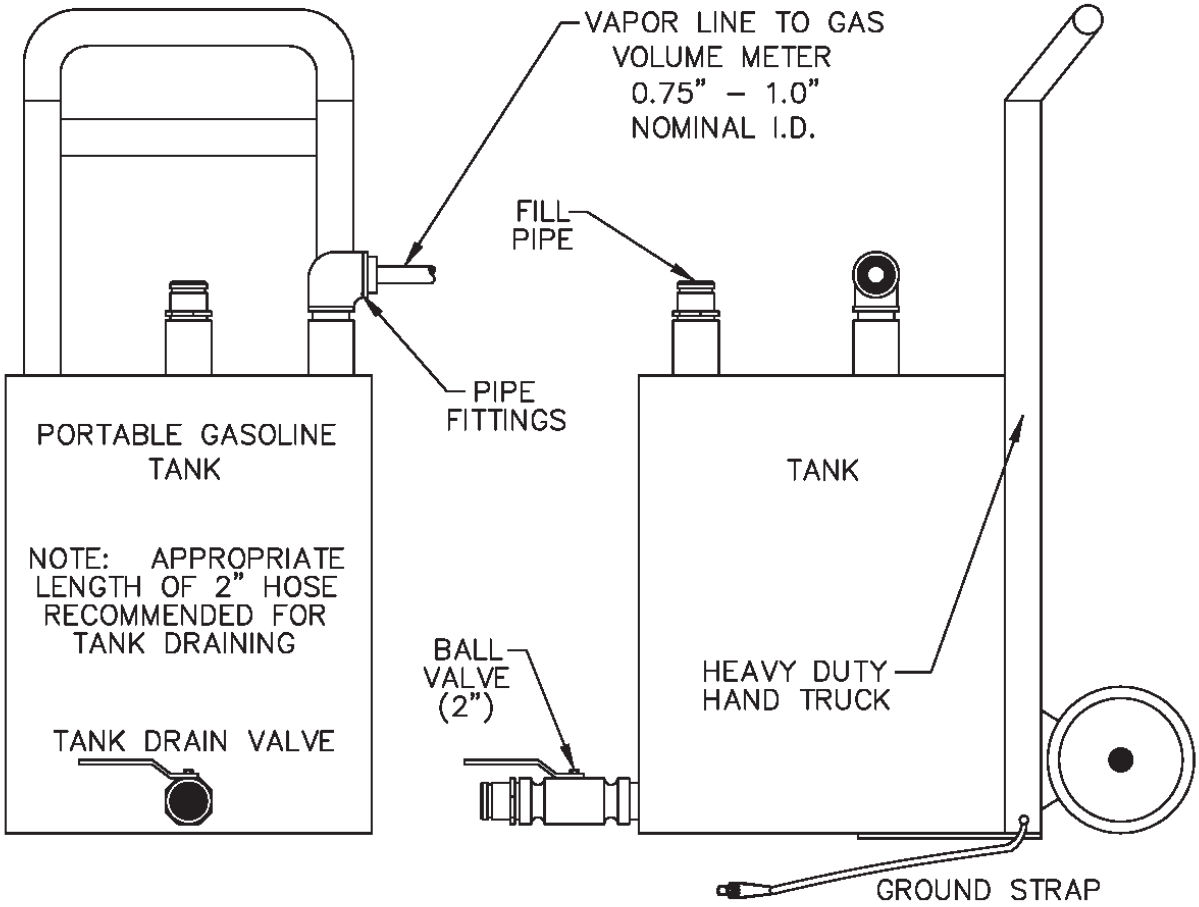

## 6. PRE-TEST PROCEDURES

**6.1** Assemble the portable tank assembly and gas volume meter as shown in Figure 4. The minimum and maximum dimensions shown in Figure 4 shall be adhered to in all cases. **Ensure that the ground strap is properly connected to an acceptable ground**.

Note: A one-time test to verify proper design of the tee connection at the gas volume meter shall be conducted. Disconnect the V/L adaptor from the nozzle. Insert the nozzle into the portable test tank so that there is no visible gap between the nozzle boot/portable test tank fill pipe interface. Dispense between four and one-half and five (4.5 - 5.0) gallons into the portable test tank. The tee connection design passes the test if the displacement on the gas volume meter is less than 0.01 cubic feet. The result of this test shall be kept with the test equipment. If the tee connection is altered or changed, the above test must be repeated to ensure proper design.

**6.2** The gas volume meter shall be calibrated, within 180 days prior to conducting this procedure. In addition, calibration shall be conducted after any repairs or alterations (changes to the operation or configuration of the meter) to the meter. Calibrations, at a minimum, shall be conducted at flowrates of 30, 60, and 90 CFH (3.7, 7.5, and 11.2 gallons/minute) in accordance with one of the following:

(a) ARB Air Monitoring Quality Assurance, Volume VI, Standard Operating Procedures for Stationary Source Emission Monitoring, January 1979, or

(b) US EPA Quality Assurance Handbook for Air Pollution Measurement Systems, Volume III, Stationary Source Specific Methods, or

(c) EPA Method 2A, Measurement of Gas Volume Through Pipes and Small Ducts (40 CFR Part 60, Appendix A), or

(d) Appropriate calibration procedures in accordance with California Department of Food and Agriculture, Division of Measurement Standards and County Department of Weights and Measures (title 4, CCR, section 3.33).

A copy of the most current calibration shall be kept with the meter.

**Figure 4**

**Assembled Vapor to Liquid Volume Ratio Test Equipment**

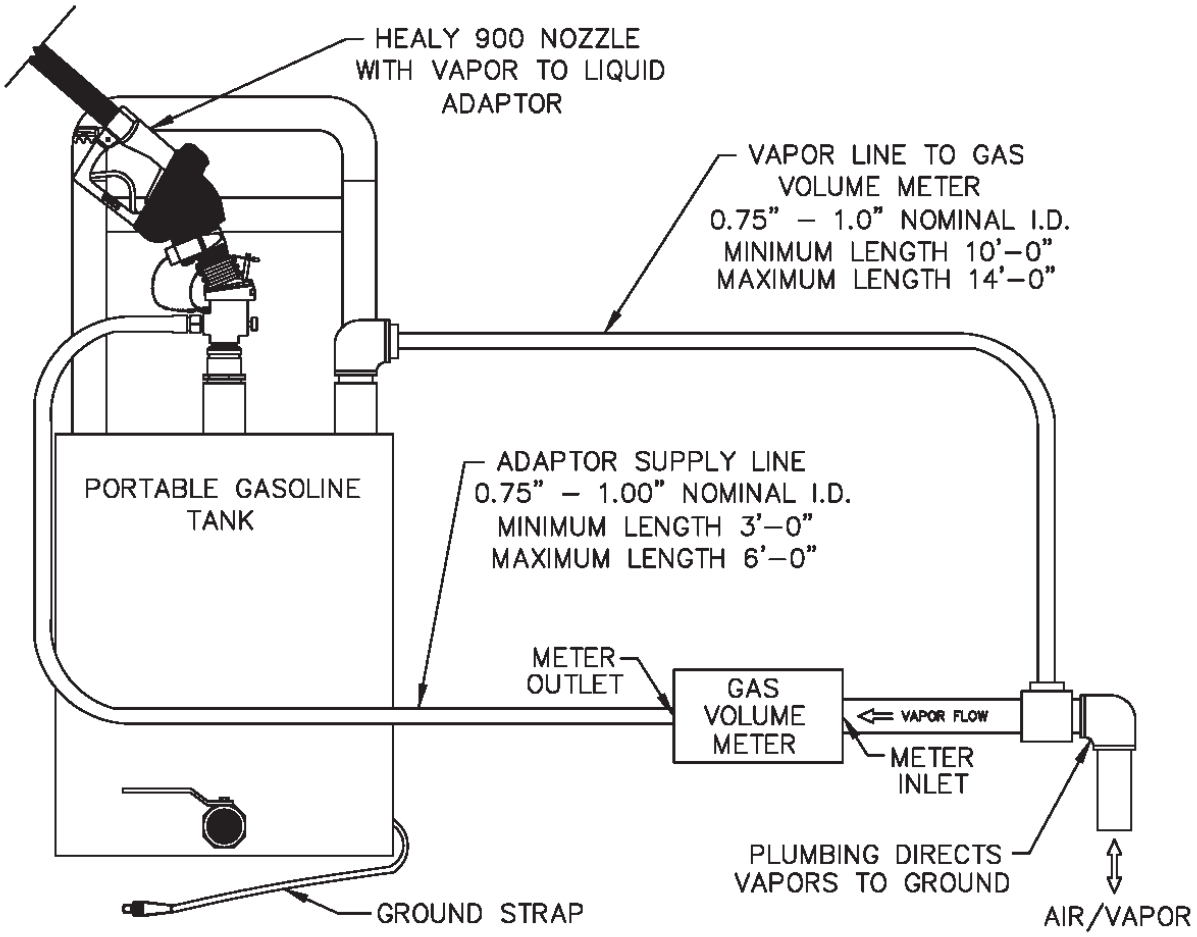

**6.3** Verify that the O-ring in the V/L adaptor is present and in good condition. An O-ring with nicks, tears, or other deformations shall be replaced prior to the test. The O-ring shall be properly lubricated (see Section 5.7) to ensure a vapor tight connection.

**6.4** Conduct a pre-test leak check of the V/L adaptor, the gas volume meter and the adaptor supply hose by connecting the V/L adaptor to a surrogate spout as shown in Figure 5 and described in Section 5.1B. Raise the test pressure to 5.00” ± 0.50” WC. There shall not be a pressure drop of more than 1.00” WC from the above starting pressure for 30 seconds from the start of the test. If the leak test passes, proceed with the V/L testing. If the leak test fails, proceed to isolate the source of the leak by pressurizing the test equipment again. Squirt liquid leak detector solution on interfaces and other potential leak sources and watch for the formation of bubbles. Once leak(s) are repaired, repeat the leak test procedure.

**Note:** Leak checks shall be conducted in a shaded area or away from direct sunlight. Leak checks may be conducted during V/L testing to ensure leak integrity of test equipment.

**6.5** This test procedure shall be conducted with the storage tank pressure/vacuum (P/V) valve(s) installed and the Phase I vapor coupler(s) poppet(s) in the closed position with the adaptor dust cap(s) installed.

**6.6** With the portable tank and V/L test equipment assembled, dispense gasoline into the portable test tank until at least 10% of the tanks total capacity has been reached. This will condition the portable tank with gasoline vapors. This conditioning shall be conducted each time the test tank is emptied prior to conducting testing at each facility.

**6.7** All pressure measuring device(s) shall be bench calibrated using a reference gauge, incline manometer or NIST traceable standard at least once every six (6) months. Calibration shall be performed at 20, 50, and 80 percent of full scale. Accuracy shall be within five (5) percent at each of these calibration points.

**Figure 5**

**Vapor To Liquid Adaptor and Gas Volume Meter Leak Test Assembly**

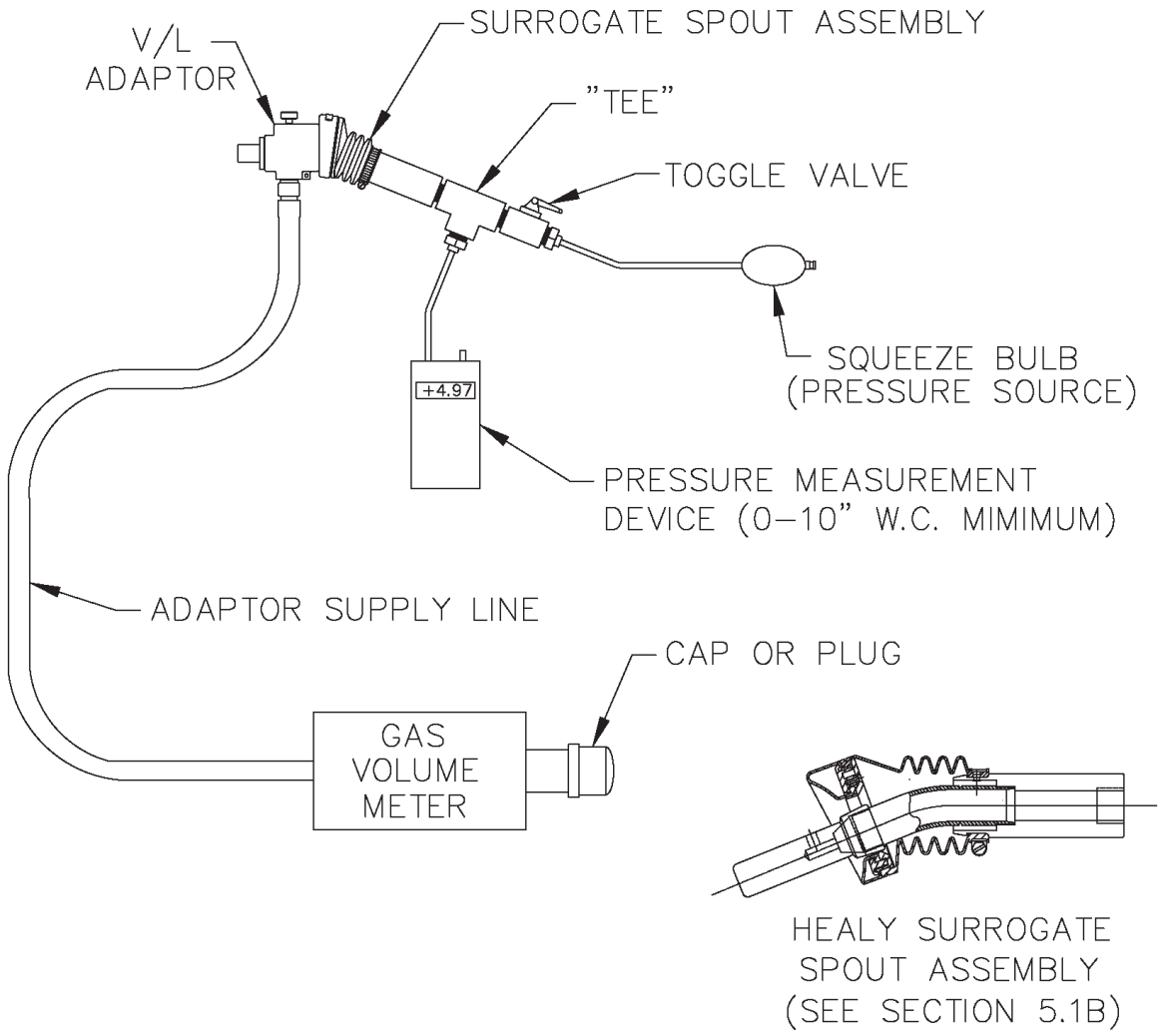

## 7. TEST PROCEDURES

**7.1** Carefully connect the V/L adaptor to the nozzle spout as shown in Figure 1, isolating the vapor path of the nozzle and ensuring a tight connection.

**7.2** Record the initial reading from the index of the gas volume meter on the Healy V/L Field Data Sheet at the end of this document. This initial reading shall be taken before each test. Do not use the final reading from the preceding test as the initial reading for the current test, unless it has been verified. This is necessary since the meter index may have moved due to the low pressure drop through the meter.

**7.3** Reset the stopwatch and, if appropriate, reset the totalizer on the dispenser.

**7.4** Holding the nozzle lever in the maximum hand-held position in order to dispense at the highest possible flow rate and begin dispensing into the portable gasoline tank. **Ensure that the nozzle spout is in contact with the grounded tank assembly during dispensing**. Start the stopwatch when the totalizer indicates dispensing has started.

**7.5** Dispense between four and one-half (4.5) and five (5.0) gallons of gasoline.

If the nozzle being tested introduces liquid into the V/L adaptor, the gas volume meter or the adaptor supply hose, the V/L of that nozzle shall be deemed a failure.

**7.6** Simultaneously stop both the stopwatch and gasoline dispensing.

**7.7** The following data for each test shall be recorded on the Healy V/L Field Data Sheet:

**7.7.1** Dispenser (pump) number

**7.7.2** Fuel grade

**7.7.3** Nozzle serial number (found below nozzle handguard)

**7.7.4** Initial gas volume meter reading, in cubic feet

**7.7.5** Initial totalizer reading from the dispenser, in gallons

**7.7.6** Final gas volume meter reading, in cubic feet

**7.7.7** Final totalizer reading from the dispenser, in gallons

**7.7.8** Elapsed time during dispensing, in seconds

**Note**: Units other than cubic feet, gallons, and seconds may be used, provided that Equation 9-1 is appropriately modified.

**7.8** If the V/L Volumetric Ratio, as determined by Equation 9-1 is between 0.95 –1.15, the grade point complies with the specifications.

**7.9** If the V/L Volumetric Ratio is between 0.76 – 0.94, or greater than or equal to 1.16, conduct the test two additional times. Do not make adjustments to the gasoline dispensing or vapor recovery lines until all three test runs have been completed. Only adjustments to the V/L test equipment and the connection between the V/L adaptor and the nozzle will be allowed in order to ensure measurement accuracy. All other adjustments to the vapor recovery equipment, including but not limited to the vapor collection pump and the nozzle, are not allowed. If the V/L test equipment is adjusted, then the prior test run results for that grade point tested should not be used. Calculate the numerical average of the three test runs. If the average V/L value of these three test runs is within the allowable limits, compliance has been verified. If the resulting average is outside of the specified limits, the grade point tested does not comply with the specifications of the EO.

Note: Section 1.10 of the Healy 900 Nozzle portion of the **ARB Approved Installation, Operation and Maintenance Manual** provides instructions on making nozzle V/L adjustments.

**7.10** If the initial V/L Volumetric Ratio is less than or equal to 0.75, this indicates a V/L failure of the grade point tested.

**7.11** To avoid a build-up of gasoline, drain any condensed gasoline from the hoses between the gas volume meter and portable tank assembly, and the V/L adaptor and gas volume meter whenever fuel is emptied from the portable tank.

## 8. POST-TEST PROCEDURES

**8.1** Remove the V/L adaptor from the nozzle.

**8.2** Drain the dispensed product into the appropriate gasoline storage tank at the facility. **Ground the portable tank assembly to the storage tank before draining**. Do not mix product grades in the portable tank assembly without approval of the facility owner and use caution to drain the portable tank into the correct facility storage tank. If blending valves are utilized to produce product grades that do not have a dedicated storage tank, product from the blended grade shall be returned to the lower octane tank.

**8.3** After concluding testing at the facility, perform a post-test leak check of the V/L adaptor, the gas volume meter and the adaptor supply hose by connecting the V/L adaptor to a surrogate spout as shown in Figure 5 and described in Section 5.1B. Raise the test pressure to 5.00” ± 0.50” WC. There shall not be a pressure drop of more than 1.00” WC from the above starting pressure for 30 seconds from the start of the test. The data collected during the V/L testing between the last valid test equipment leak check (see Section 6.4) and the post-test leak check is invalid if the test equipment fails this post-test leak check.

**Note:** Leak checks shall be conducted in a shaded area or away from direct sunlight.

**8.4** Prior to transportation, the inlet and outlet of the gas volume meter shall be carefully sealed to prevent foreign matter from entering the meter.

**8.5** The Authority Having Jurisdiction (AHJ) may be contacted on the requirements for storage and transportation of the portable test tank. This would typically be the local fire department.

## 9. CALCULATING RESULTS

**9.1** The V/L Volumetric Ratio shall be calculated as shown in Equation 9-1.

$$V/L = \left[ \frac{y\,(Vf - Vi)}{G_f - G_i} \right] \text{x } 7.481 \qquad \textbf{[Equation 9-1]}$$

Where:

| | | |
|---|---|---|
| *V/L* | = | Vapor to Liquid Volumetric Ratio, dimensionless |
| *y* | = | Correction factor for gas volume meter. See Equation 9-3 |
| $V_i$ | = | Initial gas volume meter reading, cubic feet |
| $V_f$ | = | Final gas volume meter reading, cubic feet |
| $G_i$ | = | Initial totalizer reading from the dispenser, gallons |
| $G_f$ | = | Final totalizer reading from the dispenser, gallons |
| 7.481 | = | Conversion factor from gallons to cubic feet, gallons per cubic foot |

**9.2** The gasoline dispensing rate during the V/L test shall be calculated as shown in Equation 9-2.

$$Q_g = \left[ \frac{G_f - G_i}{t} \right] \text{x } 60 \qquad \textbf{[Equation 9-2]}$$

Where:

| | | |
|---|---|---|
| $Q_g$ | = | Gasoline dispensing rate, gallons per minute |
| $G_I$ | = | Initial totalizer reading from the dispenser, gallons |
| $G_f$ | = | Final totalizer reading from the dispenser, gallons |
| *t* | = | Elapsed time during dispensing event, seconds |
| 60 | = | Conversion factor, seconds per minute |

**9.3** The correction factor (determined during gas volume meter calibration) for correcting observed values of the gas volume meter shall be calculated as shown in Equation 9-3.

$$y = \left[ \frac{V_r}{V_m} \right] \qquad \textbf{[Equation 9-3]}$$

Where:

| | | |
|---|---|---|
| *y* | = | Correction factor for the gas volume meter's observed reading, dimensionless |
| $V_r$ | = | True volume from current calibration of gas volume meter, cubic feet |
| $V_m$ | = | Corresponding observed reading from gas volume meter, cubic feet |

## 10. REPORTING RESULTS

**10.1** Report V/L test data and other information as required in the Healy V/L Field Data Sheet at the end of this document. Districts may require the use of alternate forms, provided they include the same minimum parameters as identified in the Healy V/L Field Data Sheet.

## 11. ALTERNATE PROCEDURES

**11.1** This procedure shall be conducted as specified. Modifications to this test procedure shall not be used to determine compliance unless prior written approval has been obtained from the ARB Executive Officer, pursuant to Section 14 of Certification Procedure CP-201.

GDF Name and Address:

_____

_____

_____

# Healy V/L Field Data Sheet

Tee Connection Test Result (6.1) _____ $ft^3$
Date of Last Gas Volume Meter Calibration _____
Gas Volume Meter Correction Factor (9.3) _____
Pressure Measurement Device Calibration Date _____

Testing Firm Name and Address:

_____

_____

_____

Phone No. (  )

Test Date/Time:

Test Performed by:_____
If Required by local district, provide
Technician Certification Number:_____
Certification Expiration Date:

**Pre-Test Leak Check:**
Initial/Final Pressures, in. $H_2O$ _____ / _____
**Post-Test Leak Check:**
Initial/Final Pressures, in. $H_2O$ _____ / _____

**A/C #** _____ **P/O #** _____

District Test Witness _____
Applicable ARB Executive Order (circle one)

VR-201 or VR-202

Allowable V/L Range 0.95 – 1.15

| 7.7.1 Pump # | 7.7.2 Fuel Grade | 7.7.3 Nozzle Serial # | 7.7.5 Initial Dispenser Totalizer, Gallons | 7.7.7 Final Dispenser Totalizer, Gallons | Total Gas Pumped, Gallons | 7.7.8 Time, Seconds | 9.2 Dispensing Rate, gpm | 7.7.4 Initial Meter Reading, ft3 | 7.7.6 Final Meter Reading, ft3 | 7.8, 9.1 V/L | 7.9 V/L Average (if necessary) | 7.8, 7.9 or 7.10 Pass or Fail |
|---|---|---|---|---|---|---|---|---|---|---|---|---|
| | | | | | | | | | | | | |
| | | | | | | | | | | | | |
| | | | | | | | | | | | | |
| | | | | | | | | | | | | |
| | | | | | | | | | | | | |
| | | | | | | | | | | | | |
| | | | | | | | | | | | | |
| | | | | | | | | | | | | |
| | | | | | | | | | | | | |
| | | | | | | | | | | | | |
| | | | | | | | | | | | | |
| | | | | | | | | | | | | |

**Executive Order VR-201-M**
**Healy Phase II EVR System**
**Not Including ISD**

## Exhibit 6

## Healy Phase II EVR System Limited Warranty

Franklin Fueling Systems / Healy (FFS/Healy) products are warranted to the initial purchaser, and any subsequent purchaser within the warranty period, for workmanship, performance, and materials when properly installed, used and maintained using the **ARB Approved Installation, Operation and Maintenance Manual**. All FFS/Healy products, subassemblies, and raw materials are fully inspected and tested at the manufacturing facility. FFS / Healy warrants the workmanship and materials to be free of defects for a period in accordance with the provisions stated below:

- The equipment has been installed according to the **ARB Approved Installation, Operation and Maintenance Manual**.
- A Healy Certified Technician qualified to perform service on the defective equipment must perform warranty service. Only Healy Certified Technicians are allowed to perform warranty service. Use of service personnel other than qualified Healy Certified Technicians without prior written approval by FFS/Healy will void the warranty.
- Claims for warranty repair or replacement service must have a written “Returned Material Authorization” (RMA) from FFS/Healy, and must be shipped freight prepaid to FFS/Healy for inspection.
- FFS/Healy, upon inspection at its facilities, and after determination of a warranty claim, will, at its option, repair or replace defective parts returned to its factory. Repaired or replaced parts will be returned freight prepaid by FFS/Healy.
- FFS/Healy is not responsible for labor or materials necessary to disconnect or connect the warranted product for return to FFS/Healy.
- FFS/Healy reserves the right to make changes in the design or to make additions or improvements with respect to its products without incurring any obligation to modify or install same on previously manufactured products, upon written California ARB approval.
- FFS/Healy warrants the workmanship and materials of the following products to be free of defects and will comply with the performance standards of California ARB CP-201 for a period of one (1) year from the date of installation or eighteen months from the date of manufacture from FFS/Healy: Inverted coaxial hoses, Hose adapters, Flow limiters and Breakaways.
- EVR Nozzles 900 Series – New & Rebuilt: Healy Systems Inc. warrants the workmanship and materials to be free of defects and will comply with the performance standards of California ARB CP-201 for a period of one (1) year from the date of installation or eighteen months from the date of manufacture from FFS/Healy. Exclusions: This warranty excludes the field replaceable “rubber/plastic” parts at the front of the nozzle (i.e., boot, scuffguard, face seal assembly, etc.) or the spout or parts that have been subjected to misuse, mishandling or incorrect installation.
- Vacuum Pump – VP1000: FFS/Healy warrants the workmanship and materials to be free of defects and will comply with the performance standards of California ARB CP-201 for a period of one (1) year from date of installation or twenty-six months from the date of manufacture from FFS/Healy. This applies to the vacuum pump and motor assembly only. The Hardware Kits, Vapor Kits, Electrical Kits and Interface modules are warranted for workmanship and materials to be free of defects for a period of one (1) year from date of installation or eighteen months from the date of manufacture from FFS/Healy.

**Executive Order VR-201-M**
**Healy Phase II EVR System**
**Not Including ISD**

## Exhibit 6

- Clean Air Separator – FFS/Healy warrants the workmanship and materials to be free of defects and will comply with the performance standards of California ARB CP-201 for a period of five (5) years from the date of installation or 60 months from the date of manufacture from FFS/Healy. This warranty is void if the Clean Air Separator fails to meet the performance standards as a result from damage to the tank due to corrosion. The Lockable ball valves, Locks, Master key and Float check valve shipped with installation kit, which are warranted for one (1) year from the date of installation or eighteen months from the date of manufacture from FFS/Healy.
- General Exclusions: This warranty shall not apply to any product which has been altered in any way, which has been repaired by any party other than Healy Certified Technicians, or when such failure is due to misuse or conditions of use. Use of non-Healy replacement parts, the unauthorized addition of non-Healy items to equipment, and the unauthorized alteration of equipment void this warranty. FFS/Healy shall, as to each defect, be relieved of all obligations and liabilities under a components warranty if the vapor recovery system or components have been operated with any accessory, equipment, or a part not specifically approved by FFS/Healy and not manufactured by FFS/Healy to FFS/Healy design and specifications. FFS/Healy makes no warranty with respect to the performance of equipment or performance of services under this agreement, express or implied, and FFS/Healy hereby disclaims the implied warranties of merchantability and fitness for a particular purpose.
- This warranty shall not cover any FFS/Healy components that have been in contact with fuels containing greater than 15% methanol, 15% ethanol, or 15% MTBE by volume. Any component(s), which is exposed to M85/E85 fuel (or other alcohol-rich fuel), is not covered under the FFS/Healy warranty.

This warranty is a limited warranty. Anything in the warranty notwithstanding, implied warranties for fitness, particular purpose and merchantability shall be limited to the duration of the express warranty. FFS/Healy expressly disclaims and excludes any liability for consequential or incidental damage for breach of any express or implied warranty.

## Exhibit 7

### Nozzle Bag Test Procedure
(Executive Orders VR-201-M and VR-202-M)

Verification of the integrity of the vapor valve shall be performed on installed nozzles by use of the following test.

Note: The following procedure requires that all nozzles on a dispenser be bagged at the same time. Bagging only one nozzle on a dispenser during this procedure may bias the results toward compliance.

a. Seal all nozzles on a dispenser in plastic bags, using tape or other means to secure the bag around the base of the nozzle (see Figure 1). Any plastic bag large enough to enclose the nozzle and having a thickness of no greater than 2 mils can be used.

b. Initialize the dispenser for fueling as follows:

    1. Inform the station operator that you are running a test and ask the operator to initialize the dispenser; or

    2. Swipe a credit card in the dispenser card reader.

c. Activate the Healy vacuum pump by lifting one of the nozzles off the dispenser holster and selecting a grade of fuel. **Do not dispense any fuel**.

d. With the dispenser initialized and the vacuum pump activated, observe all bagged nozzles for 30 seconds. Any nozzle where the bag can be seen visually collapsing has a defective vapor valve and the dispenser shall be removed from service immediately.

e. Record the test results on the “Nozzle Bag Test Results” form provided in this Exhibit. Districts may require use of an alternate form, provided that the alternate form includes the same minimum parameters.

f. Remove the bags from all the nozzles tested and disengage the dispenser by returning the nozzles to the dispenser holsters.

g. Repeat steps a through f for each dispenser.

Figure 1

# NOZZLE BAG TEST RESULTS

| SOURCE INFORMATION | | TEST COMPANY INFORMATION | |
|---|---|---|---|
| Facility (DBA) / Site Address: | Facility Representative / Title: | Test Company Name / Address | # of Nozzles:_____ |
| Print Name | Print Name | Print Name | # Nozzles Tested:_____ |
| Street Address | Title | Street Address | # Nozzles Passed:_____ |
| City Zip | ( ) Phone No. | City Zip | # Nozzles Failed: _____ |
| District Inspector: | ☐ P / O ☐ S / A ☐ A / C Number: | Date of Test: | # Nozzles not Tested: _____ Time of Test: |

| Dispenser | Gas Grade | Nozzle Type | Bag Collapse after 30 Seconds? |
|---|---|---|---|
| | | | ☐ Yes ☐ No |
| | | | ☐ Yes ☐ No |
| | | | ☐ Yes ☐ No |
| | | | ☐ Yes ☐ No |
| | | | ☐ Yes ☐ No |
| | | | ☐ Yes ☐ No |
| | | | ☐ Yes ☐ No |
| | | | ☐ Yes ☐ No |
| | | | ☐ Yes ☐ No |
| | | | ☐ Yes ☐ No |
| | | | ☐ Yes ☐ No |
| | | | ☐ Yes ☐ No |
| | | | ☐ Yes ☐ No |
| | | | ☐ Yes ☐ No |
| | | | ☐ Yes ☐ No |
| | | | ☐ Yes ☐ No |
| | | | ☐ Yes ☐ No |
| | | | ☐ Yes ☐ No |

## Exhibit 8

### Required Items in Conducting TP-201.3
(Executive Orders VR-201-M and VR-202-M)

The instructions below are required when conducting TP-201.3 for these systems. The tester shall document that each step was followed as indicated below and shall include this page of the Exhibit with the submission of TP-201.3 test results. Note that districts may require use of an alternate form to meet these requirements, provided the alternate form includes the same minimum parameters.

1. Prior to conducting TP-201.3, all four ball valves on the Healy Clean Air Separator (CAS) shall be closed, as shown in Figure 1 or Figure 1H, to isolate it from the Underground Storage Tank (UST) system to permit the pressurization of the UST system. Figure 1 applies to vertical CAS installations and Figure 1H applies to horizontal CAS installations.

2. Conducting TP-201.3 with any dispenser piping test valve in the closed position is **not** permitted. Any dispenser with a dispenser piping test valve in the closed position while conducting TP-201.3 will bias the test towards compliance.

3. After conducting TP-201.3, the four ball valves on the Healy Clean Air Separator (CAS) shall be locked in their normal operating positions as shown in Figure 2B-2 or 2B-2H, Exhibit 2 of Executive Orders VR-201-M and VR-202-M. Figure 2B-2 applies to vertical CAS installations and Figure 2B-2H applies to horizontal CAS installations.

| Required Steps | Verification (please circle) |
|---|---|
| 1. All four CAS ball valves closed before conducting TP-201.3 | Yes No |
| 2. All dispenser piping test valves open before conducting TP-201.3 | Yes No |
| 3. All four CAS ball valves in normal operating positions after conducting TP-201.3. | Yes No |

Test Company: _____ Facility Name:_____

_____
Print Name (Technician) Signature Date

_____
Technician Certification Number and Expiration Date
(ICC or District Training Certification, as applicable)

Figure 1

Configuration of Healy Clean Air Separator to Conduct TP-201.3

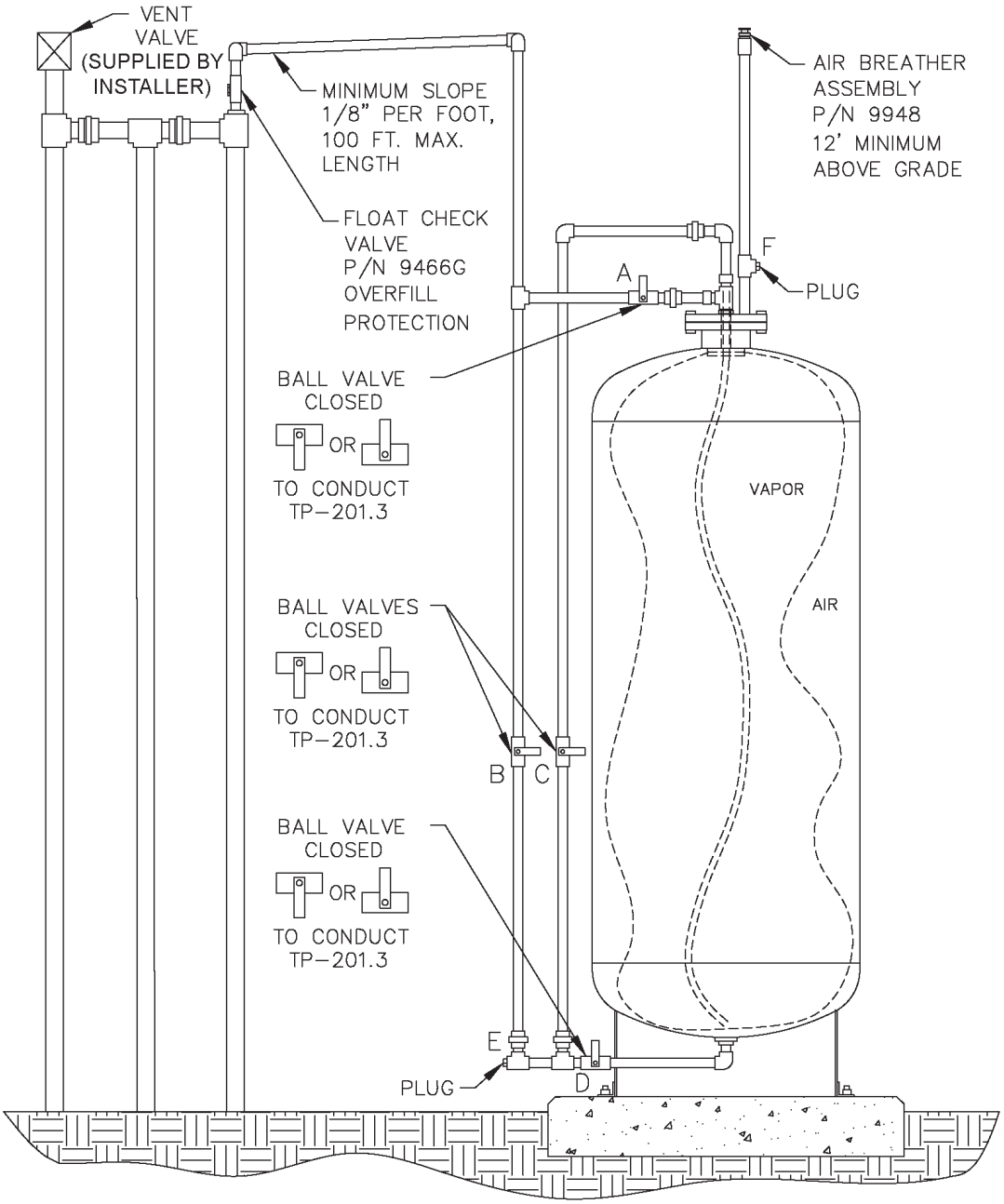

Figure 1H

Configuration of Healy Clean Air Separator to Conduct TP-201.3

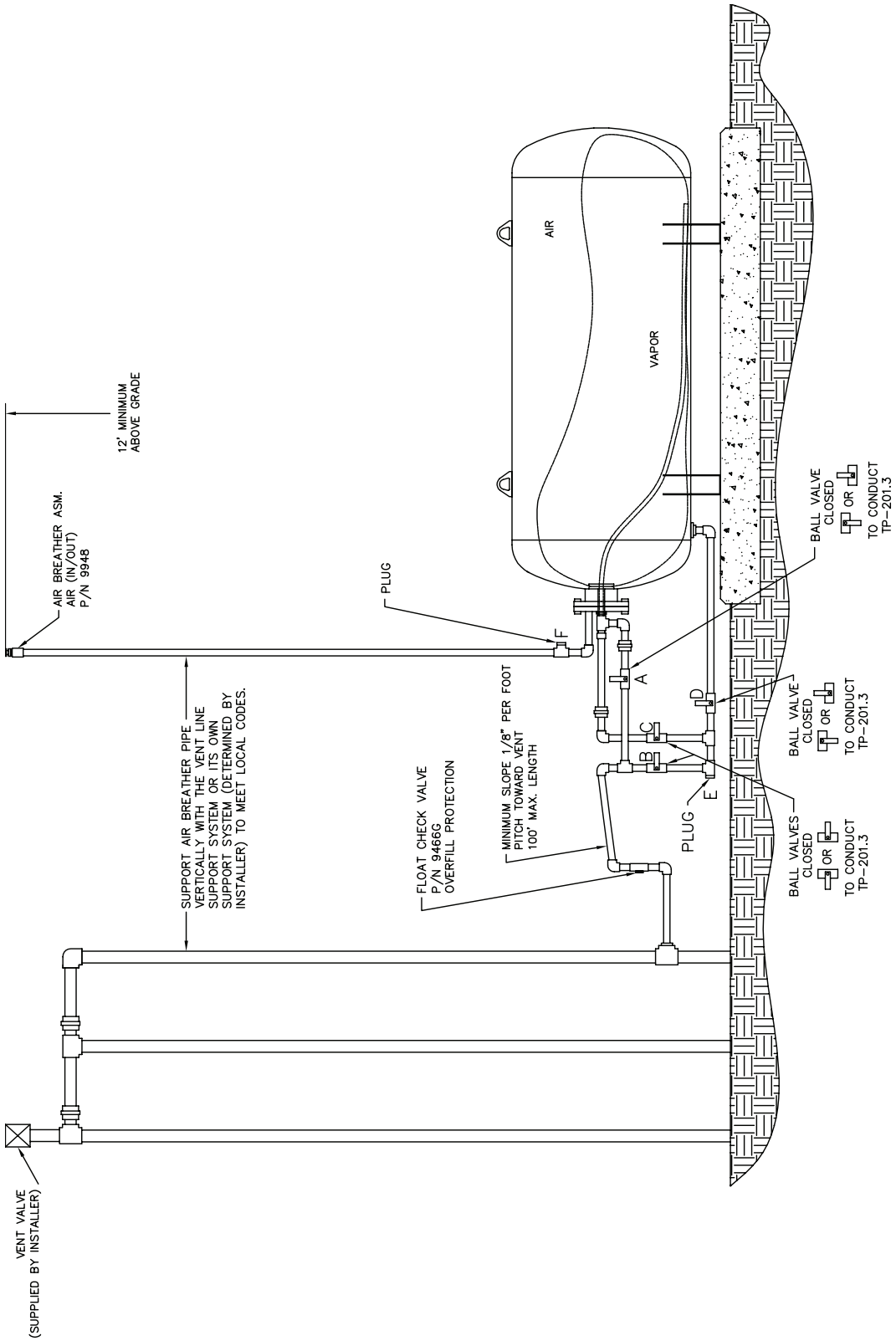

**Executive Order VR-201-M**
**Healy Phase II EVR System**
**Not Including ISD**

# EXHIBIT 9
# Liquid Condensate Trap Compliance Test Procedure

Definitions common to all certification and test procedures are in:

**D-200 Definitions for Vapor Recovery Procedures**

For the purpose of this procedure the term “ARB” refers to the California Air Resources Board, and the term “Executive Officer” refers to the ARB Executive Officer or his or her authorized representative or designate.

## 1. PURPOSE AND APPLICABILITY

This procedure is used to verify the automatic evacuation of the Liquid Condensate Trap (LCT), the Liquid Sensor Alarm, as well as Visual and Audible Alarm. This procedure provides a method to determine compliance with the LCT requirements specified in ARB Executive Order VR-201 and any subsequent amendments or revisions.

## 2. PRINCIPLE AND SUMMARY OF TEST PROCEDURE

This test procedure provides a method to determine the compliance of LCTs. Gasoline is added to the LCT until the Liquid Sensor activates an alarm. The gasoline in the LCT is then allowed to be evacuated until the Liquid Sensor Alarm has cleared.

## 3. BIASES AND INTERFERENCES

3.1. There can be no Phase I deliveries to the gasoline underground storage tank (UST) while performing this test.

3.2. To ensure that the gasoline level is below the vapor tube on the side of the Turbine Pump the gasoline level in the UST (connected to the LCT) must be below its 90 percent capacity level.

## 4. EQUIPMENT

5 gallon gasoline container and funnel or other method of pouring gasoline into the LCT.

**Figure 1**
**Typical Configuration**

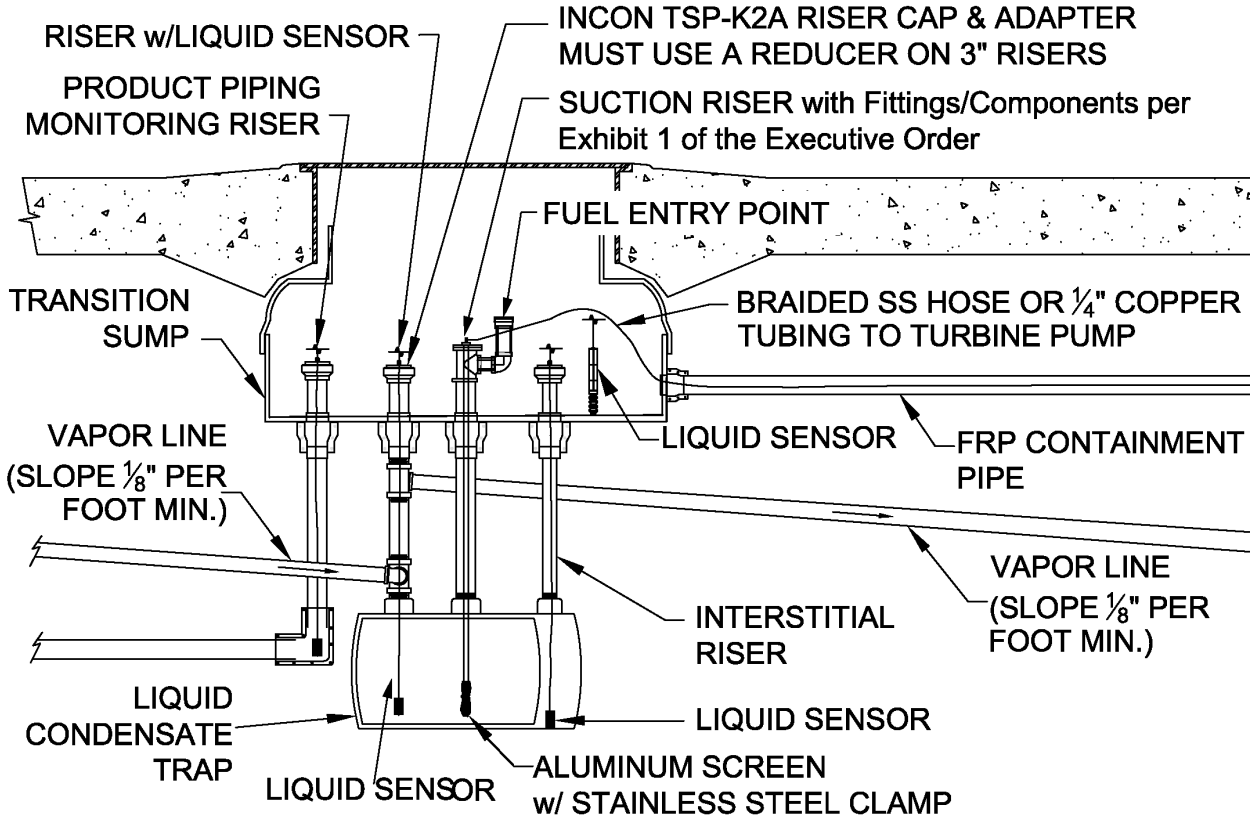


## 5. PRETEST PROCEDURE

5.1. No dispensing is allowed to any vehicle for the duration of the test.

5.2. Prior to testing, turn off the 87 grade turbine pump that is connected to the LCT suction line. (This is to keep from evacuating the LCT when adding gasoline for testing.)

5.3. Record LCT capacity in Form 1. A metal tag specifying LCT capacity is installed above the Fuel Entry Point (See Figures 1 and 2). If LCT capacity tag is not installed, the LCT is not in compliance with Exhibit 2 specifications.

## 6. TEST PROCEDURE:

6.1. Remove plug or cap on Fuel Entry Point installed at the suction riser of the LCT. Add gasoline through the open Fuel Entry Point (see Figures 1, 2 and 3).

For a typically sized LCT (9.9 gallons) this will be approximately 2 to 3 gallons of gasoline because the Liquid Sensor is installed at 2 inches from the bottom of the LCT (See Figure 4). For larger LCTs do not introduce more gasoline than 10 percent capacity of the LCT.

6.2. Verify the Liquid Sensor activates an Audible and Visual Alarm at the tank monitoring system control panel (control panel) and obtain a printout of the alarm/sensor status (see attached Appendix A for instructions on printing out the sensor alarm report for the Veeder-Root and INCON tank monitoring systems). Record results on Form 1 and attach printout of sensor status. After verification you may silence the Alarm.

If there is **No** Audible and Visual Alarm at the control panel within five (5) minutes, the LCT is not in compliance with Exhibit 2 specifications.

6.3. Verify Liquid Evacuation: Turn on the turbine pump that is connected to the LCT. Maintain this turbine pump operation (running) until the Liquid Sensor Alarm has cleared (*i.e.* turned off). Record results on Form 1 and attach printout of sensor status (see attached Appendix A for instructions on printing out the sensor alarm report for the Veeder-Root and INCON tank monitoring systems).

**Note:** To keep this turbine pump running you may need to authorize more than one fueling point during the testing period.

If the Liquid Sensor Alarm **does not clear**, (gasoline is not being evacuated), the LCT is not in compliance with Exhibit 2 specifications.

## 7. POST TEST PROCEDURE:

Reinstall plug or cap on the Fuel Entry Point using pipe thread sealant (*e.g.* pipe dope) **and** gasoline compatible PTFE tape (*e.g.* Teflon® tape, plumber's tape, or tape dope).

## 8. REPORTING RESULTS

Record all alarms and evacuation test results, as well as any failures on Form 1. Ensure all printouts from control panel are attached to Form 1. Districts may require the use of alternate forms provided that the alternate forms include the same parameters as identified in Form 1.

**Figure 2**
**Open Fuel Entry Point**

Introduce gasoline (Fuel Entry Point)

Metal tag specifying the capacity of LCT shall be affixed in this general area above Fuel Entry Point.

Suction Riser (plug removed from elbow)

**Figure 3**
**Adding Gasoline through Open Fuel Entry Point**

**Figure 4**
**Liquid Sensor Height Setting**

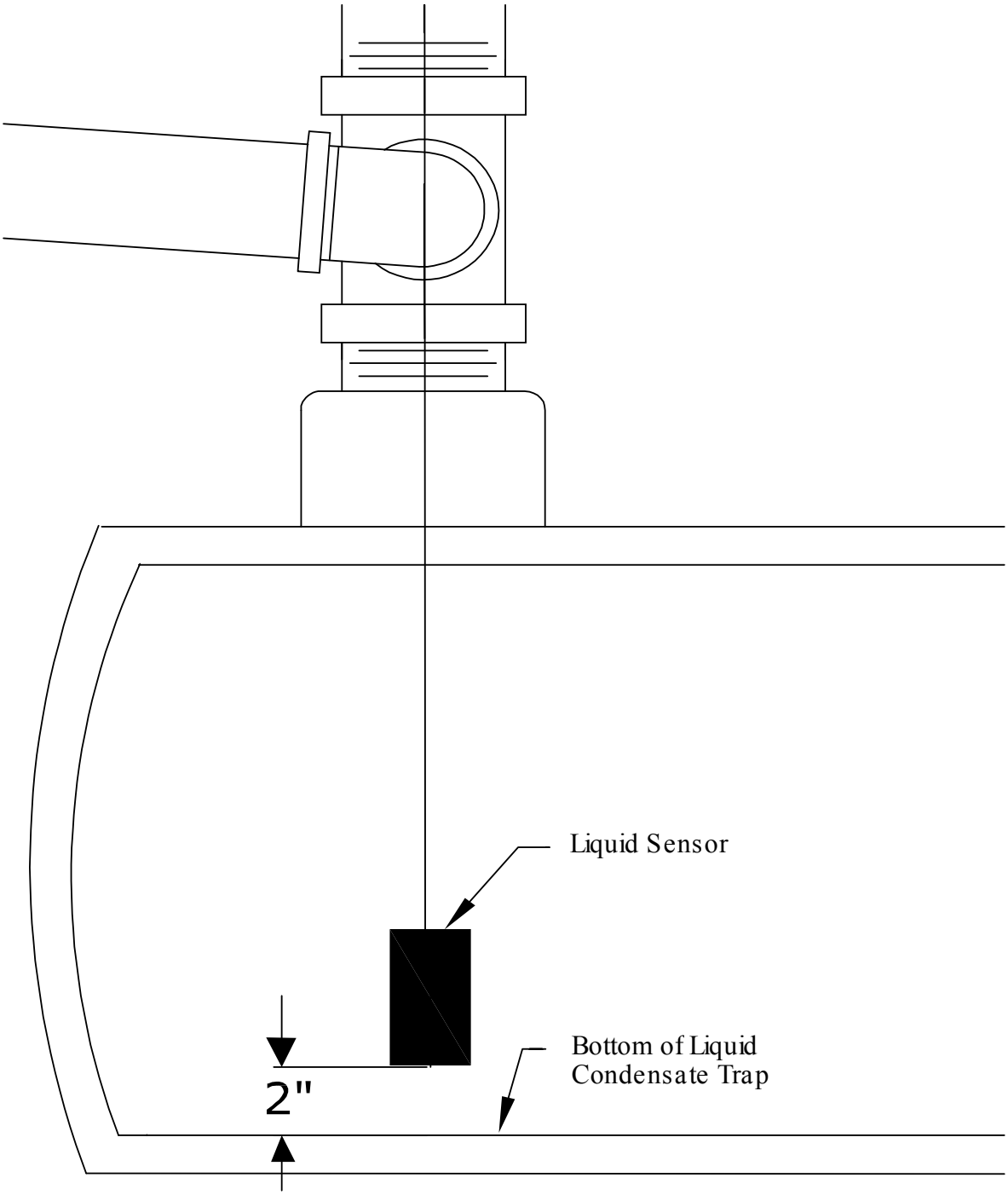

**Form 1**
**Required Data When Conducting the**
**Liquid Condensate Trap Compliance Test Procedure**

| Liquid Condensate Trap Compliance Test Form | |
|---|---|
| Service Company Name | Service Company's Telephone |
| Date of Test | Certification #'s (as applicable)<br>Healy Tech. Cert. # |
| Station Name and Address | District Training Cert. #<br><br>ICC Cert. # |
| Service Technician (print name and sign) | District Permit # |
| | Capacity of LCT in gallons |

| Applicable Step Number | Requirement | Verification (please circle) |
|---|---|---|
| Step 3.2 | Gasoline below 90 percent capacity level of UST? | Yes No |
| Step 5.3 | Was tag with LCT capacity present above Fuel Entry Point? | Yes No |
| Step 6.2 | Did Liquid Sensor activate an Audible Alarm as well as a Visual Alarm at control panel within five minutes after adding gasoline? (Attach alarm/sensor status printout to this Form.) | Yes No |
| Step 6.3 | Did LCT evacuate and Sensor Alarms clear? (Attach alarm/sensor status printout to this Form.) | Yes No |

# APPENDIX A

## VEEDER-ROOT LCT LIQUID SENSOR ALARM REPORT

There are many manufacturers of UST tank monitoring systems. The following are steps to print the Liquid Sensor Alarm History Report from the UST tank monitoring console for the Veeder-Root TLS-350 Tank Monitoring System.

> Note: When the LCT liquid sensors were originally programmed into the Tank Monitoring System the title given to those sensors included “LCT” in the name (*for example* if Liquid Sensor 10 is the High Level Liquid Sensor for the LCT it could have been named “L10 LCT High Liquid”.)

**Veeder-Root TLS-350 Console**

Liquid Sensor Alarm History Reports are a record of the last three alarms for the liquid sensor selected.

To print a Liquid Sensor Alarm History Report press the MODE key until screen displays ‘DIAGNOSTIC MODE’.

Press FUNCTION key until display reads:

**ALARM HISTORY REPORT**
**PRESS <STEP> TO CONTINUE**

Press STEP key until display reads:

**L#: ALARM HISTORY**
**PRESS <PRINT> FOR REPORT**

Press TANK/SENSOR key until you reach the liquid sensor number assigned to the High Liquid Level in the LCT (for example **L10: ALARM HISTORY**).

Press PRINT key to print the report.

## APPENDIX A CONTINUED
## INCON LCT LIQUID SENSOR ALARM REPORT

Follow the figures below to print a Sensor Report for LCT Alarm (Do not select Alarm History):

**Figure 1 – Press 'Home' button until you reach the screen shown below. Select Print Option**

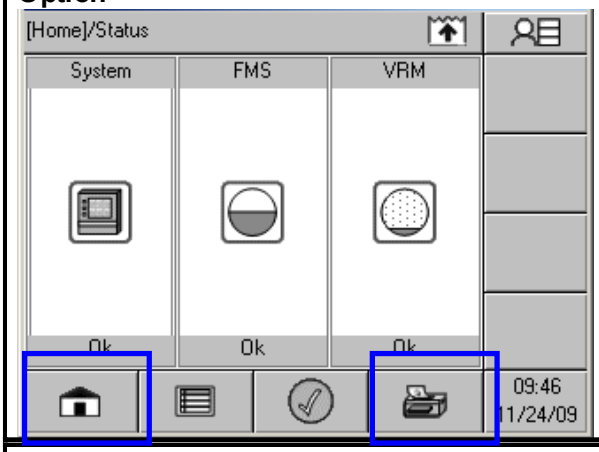


**Figure 2 - Select the FMS Option**

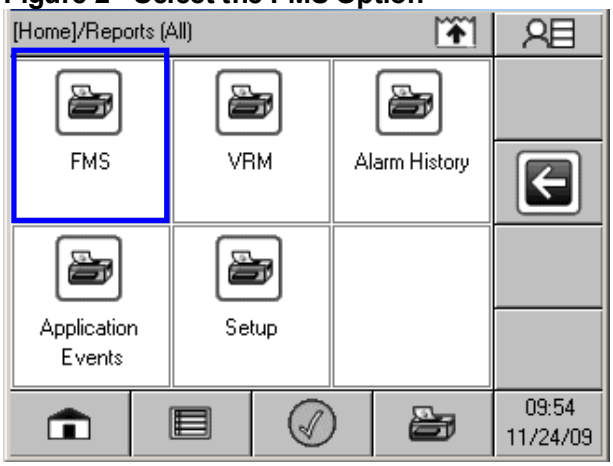


**Figure 3 - Select 'Sensor' Option - You may need to press the 'scroll' button to see the 'Sensors' selection on screen.**

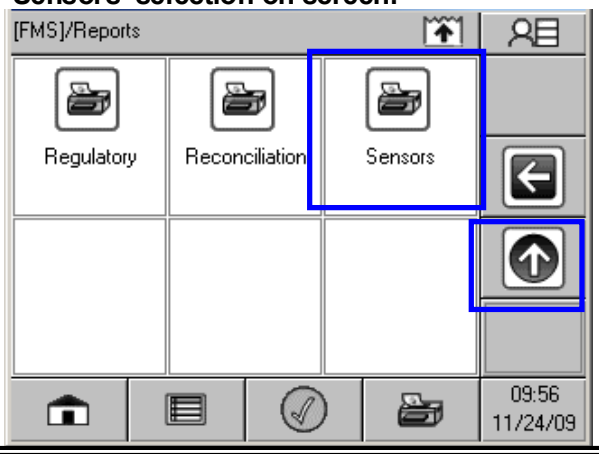


**Figure 4 - Select 'Print' Option**

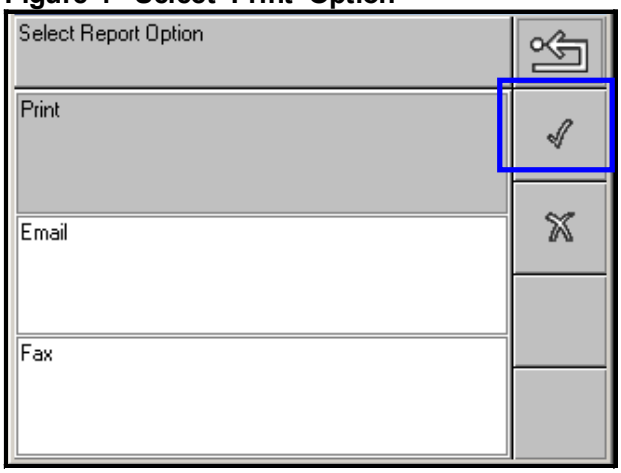


**Figure 5 - Select 'Last Available' Option. If your alarm does not show, select 'Last 30 Days' or current month and year Option. Be patient, printer takes a few minutes to print.**