INSTALLATION
OPERATION

Wayne Healy Phase II EVR System (Assist)

for

Reliance G5200 Series

Reliance G6200 Series

Select 3/G7200 Series

Century 3/G2200 Series

This Manual is to be used for new, replaced, retrofitted, or reconditioned dispensers/pumps.

DRESSER
Wayne

DANGER

PLEASE READ THIS MANUAL BEFORE YOU BEGIN

Dispensers have both electricity and a hazardous, flammable, and potentially explosive liquid. Failure to follow the below precautions and the Warning and Caution instructions in this manual may result in serious injury or death. Read every tag attached to the pump before commencing installation. Follow all rules, codes, and laws that apply to your area and installation. ***Consult the full Installation/Operation manual that came with your dispenser for information NOT pertaining to the Healy portion of the installation.***

SAFETY PRECAUTIONS - INSTALLATION AND MAINTENANCE

Always make sure ALL power to the dispenser is turned OFF before you open the dispenser cabinet for maintenance. Physically lock, restrict access to, or tag the circuit breakers you turn off when servicing the dispenser. If applicable, be sure to trip (close) the emergency valve(s) under the dispenser BEFORE beginning maintenance.

Make sure that you know how to turn OFF power to the dispenser and submersible pumps in an emergency. Have all leaks or defects repaired immediately.

EQUIPMENT PRECAUTIONS

Be sure to bleed all air from the product lines of remote dispensers and prime suction pumps before dispensing product, otherwise, damage to the equipment may occur. Always use the approved method for lifting the dispenser. Never lift by the nozzle boot, sheet metal, etc., otherwise equipment damage or personal injury may occur.

USE ONLY GENUINE PARTS

For product liability to be valid, no changes may be made to the equipment without the written consent of Dresser Wayne.

HOW TO CONTACT DRESSER WAYNE

Trouble with the installation and operation of the pump should be referred to your authorized Wayne® service personnel or Wayne Technical Support (1-800-926-3737).

INDICATORS AND NOTATIONS

DANGER	Danger indicates a hazard or unsafe practice which, if not avoided, will result in severe injury or possibly death.
WARNING	Warning indicates a hazard or unsafe practice which, if not avoided, may result in severe injury or possibly death.
CAUTION	Caution indicates a hazard or unsafe practice which, if not avoided, may result in minor injury.
NOTE:	Important information to consider, otherwise, improper installation and/or damage to components may occur.

Table of Contents

Title

1 Purpose

2 Safety

3 Models Covered

4 Wiring

4.1 Select & Century Wiring

4.2 Reliance Wiring – G6201D/ and G5201D/

4.3 Reliance Wiring – G6202D/, G5202D/, G6203D/ and G5203D/

5 Hydraulic Connections

5.1 Select & Century Base Layout

5.2 Reliance Base Layout

6 VP1000 Theory of Operation

7 Testing the System

8 Troubleshooting the VP1000

9 VP1000 Vane & Rotor Service & Replacement Guide

10 View of Dispensers

10.1 View of Reliance Dispenser

10.2 View of Select & Century Dispenser

Start-Up/New Installation/Warranty/Annual Testing Form

1 Purpose

This procedure describes how to connect to and operate a Healy Systems, Inc. Model VP1000 Vapor Recovery pump in Wayne Reliance™ G6200 and G5200 series, Wayne Select 3/G7200 series, and Wayne Century series 3/G2200 gasoline dispensers. The installer shall be a skilled petroleum technician and thoroughly familiar with the requirements of State, Federal, and local codes for installation and repair of gasoline dispensing equipment. Also, they shall be aware of all the necessary safety precautions and site safety requirements to assure a safe and trouble free installation.

Note: All electrical and hydraulic plumbing fittings referred to in these instructions must be UL "listed" or "recognized" for the purpose.

Note: Installations of vapor piping into the inlet side of the vacuum pump should be sloped such that the natural flow direction is toward the vacuum pump. However, it is permissible to have a piping slope tilted away from the vacuum pump provided that all other applicable tests (Dispenser integrity and V/L) meet the specifications outlined in the appropriate section of the Executive Order and ***ARB Approved Installation, Operation and Maintenance Manual***.

Note: For installations with In-Station Diagnostics (ISD), the vapor flow meter shall be installed on the down stream side of the vacuum pump. Every effort shall be made to install the vapor flow meter so that vapor piping between the vacuum pump and the vapor flow meter is sloped such that the natural flow direction is toward the vapor flow meter. However, it is permissible to have the piping slope away from the vapor flow meter provided that all other applicable tests (Dispenser integrity, V/L and ISD Operability) meet the specifications outlined in the appropriate section of the Executive Order and ***ARB Approved Installation, Operation and Maintenance Manual***.

2 Safety

Before installing the equipment, read, understand and follow:

- The National Electrical Code (NFPA 70)
- The Automotive and Marine Service Code (NFPA 30A)
- Any national, state and local codes that may apply.

The failure to install the equipment in accordance with NFPA 30A and 70 may adversely affect the safe use and operation of the system.

Accurate, sound installations reduce service calls: Use experienced, licensed contractors that practice accurate, safe installation techniques. Careful installation provides a sound troubleshooting framework for field repairs and can eliminate potential problems.

1. Read all instructions before beginning.
2. Follow all safety precautions:
   - Barricade the area.
   - Do not allow vehicles or unauthorized people in the area.
   - Do not smoke or allow open flames in the area.
   - Do not use power tools in the work area.
   - Wear eye protection during installation.
3. Use circuit breakers for multiple disconnects to turn off power and prevent feedback from other dispensers.

3 Models Covered

Series	Model	Description
Reliance	G6201D/ & G5201D/ G6202D/ & G5202D/ G6203D/ & G5203D/	Single Remote Twin I Remote Twin II Remote
Select	3/G7201D/ 3/G7242D/ 3/G7203D/ 3/G7207D/ 3/G7247D/ 3/G7208D/	Single Remote, Island-Oriented Twin I Remote, Island-Oriented Twin II Remote, Island-Oriented Single Remote, Lane-Oriented Twin I Remote, Lane-Oriented Twin II Remote, Lane-Oriented
Century	3/G2201D/ 3/G2202D/ 3/G2203D/ 3/G2207D/	Single Remote, Island-Oriented Twin I Remote, Island-Oriented Twin II Remote, Island-Oriented Twin I Remote, Lane-Oriented

Note: All Wayne models with the Healy Systems, Inc. Model VP1000 Vapor Recovery pump have a suffix "D3."

4 Wiring

This vapor recovery system is installed into the dispenser, at the factory, and does not require any additional wiring in the field. The field wiring for the Select 3/G7200 series and Century 3/G2200 series is exactly as is shown in the respective Installation/Operation manual. For the Reliance G6200 and G5200 series, while the field wiring remains the same, there are subtle differences in the solenoid valve wiring. Field wiring for the Reliance G6200 and G5200 series is shown in the diagrams in Sections 4.2 & 4.3.

4.1 Select & Century Wiring

The Select (3/G7200 Series) and Century (3/G2200 Series) field wiring does not change as is already shown in the respective installation manuals. The wiring diagram shown below shows the internal wiring for the Healy components as they relate to the existing dispenser wiring.

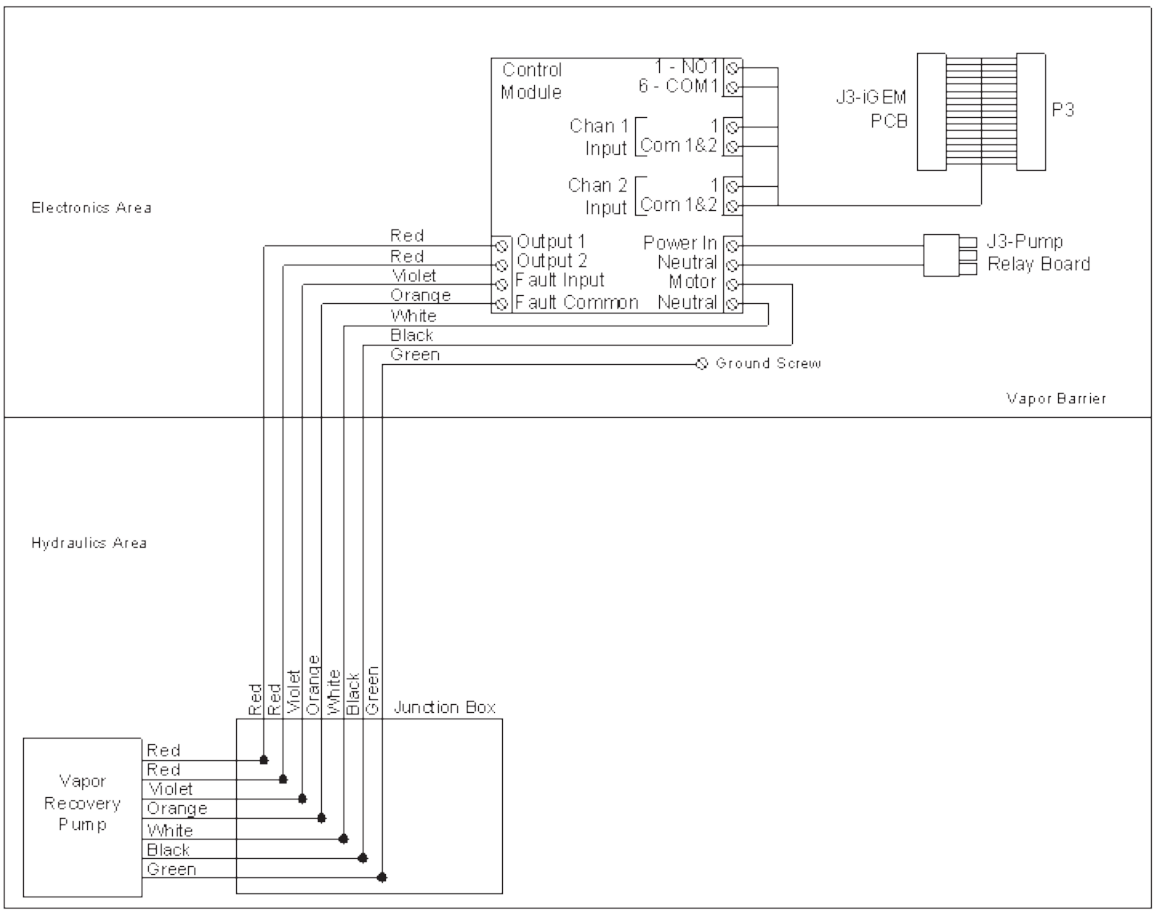

4.2 Reliance Wiring – G6201D/ and G5201D/

There are minor changes to the field wiring for this model as compared to what is shown in the Reliance installation manual.

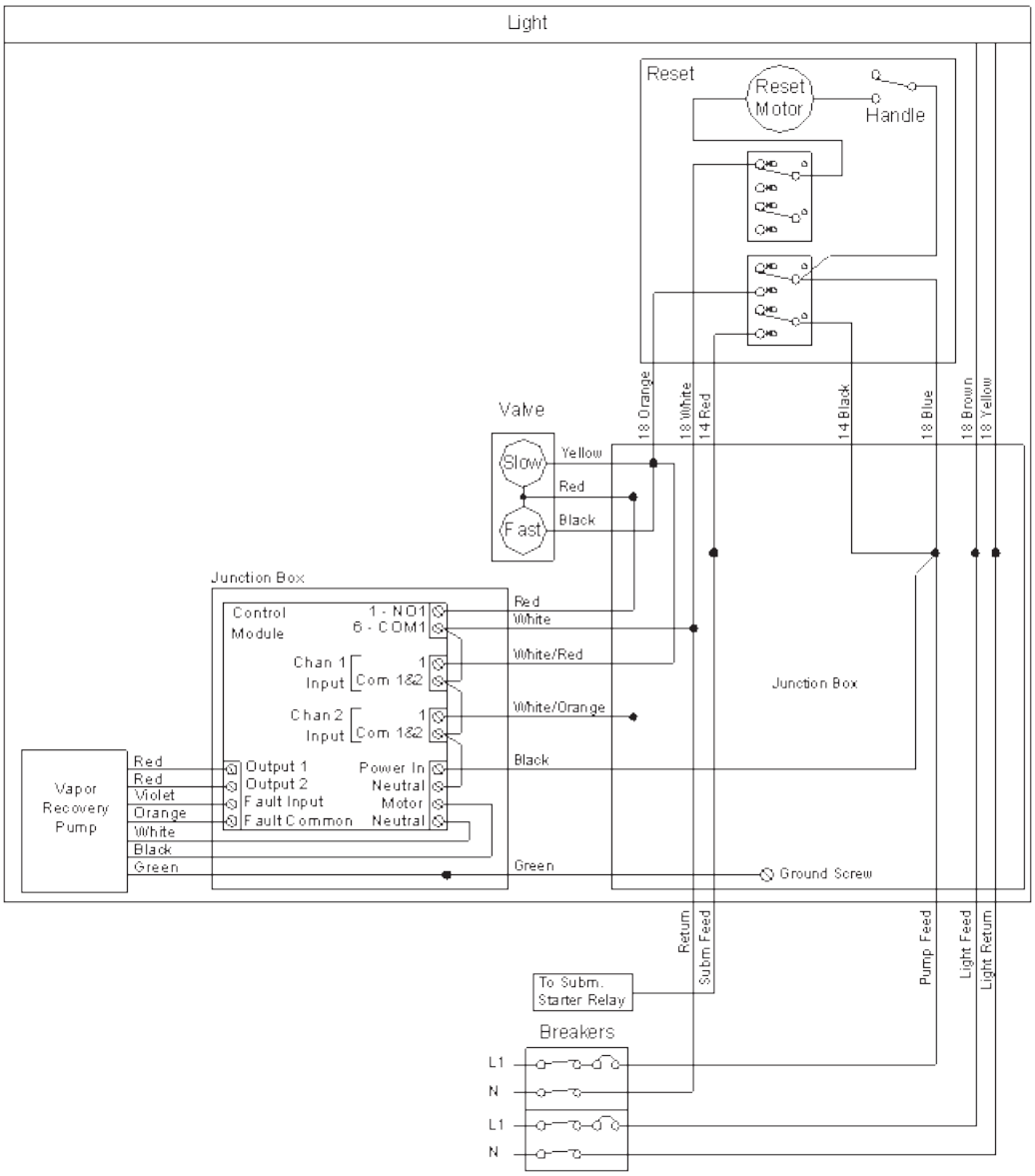

4.3 Reliance Wiring – G6202D/, G5202D/, G6203D/ and G5203D/

There are minor changes to the field wiring for these models as compared to what is shown in the Reliance installation manual.

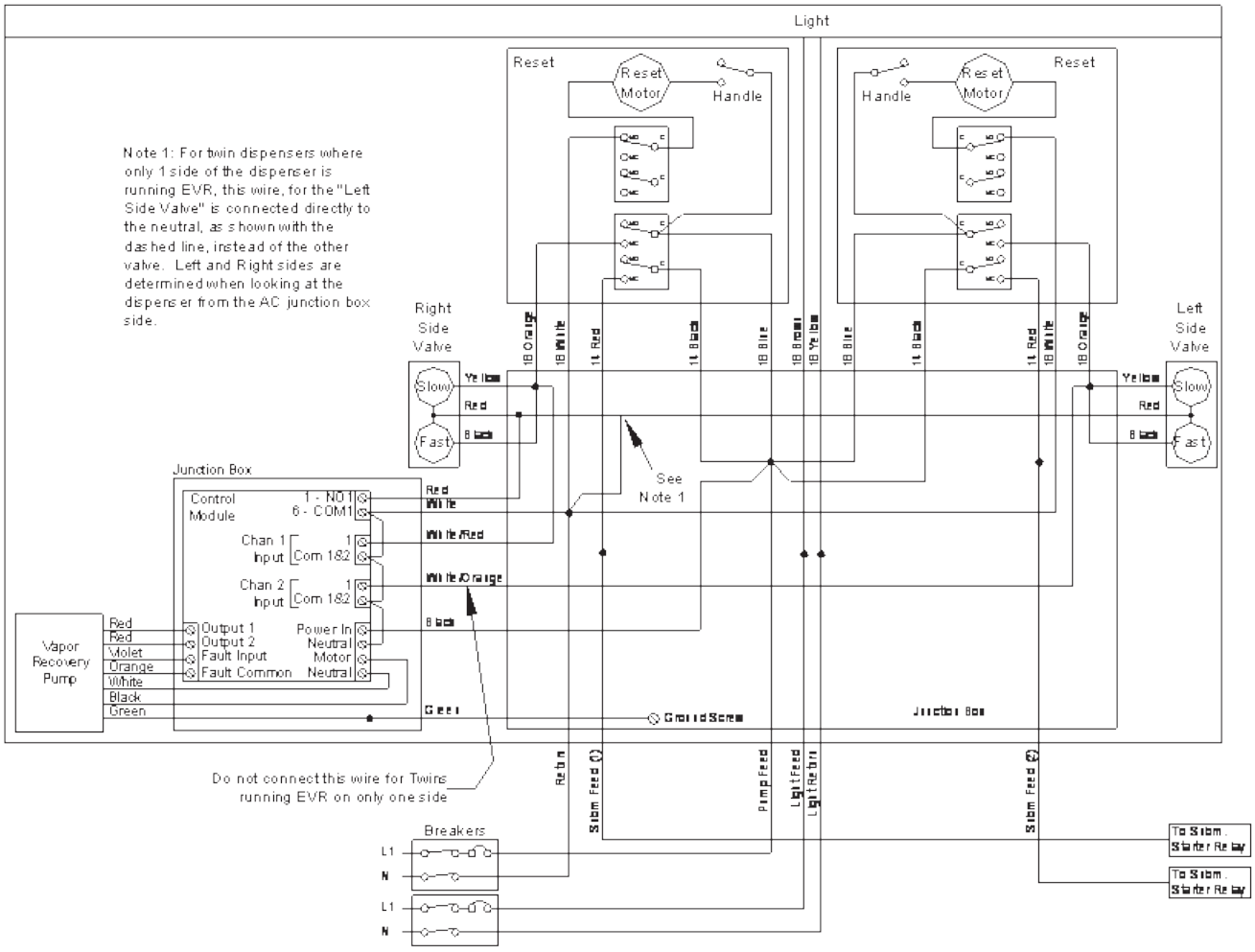

5 Hydraulic Connections

- A 1” NPT connection is supplied on the bottom of the Healy VP1000 pump. The location of this outlet is shown on the base layouts in Sections 5.1 & 5.2. This connection is used to return the vapors collected back to the tank.
- Completing the connection of Healy Systems dispensing equipment requires the installation of Healy Systems Phase II dispenser adapters, hoses, breakaways and nozzles (hanging hardware).
- Healy Vapor Recovery Hoses are available in various lengths to satisfy local ordinances and still provide “far side” fueling capability. Install these following the instructions contained on the shipping box.
- The Healy Systems nozzle Model 900 is the nozzle necessary to complete the upgrade. Be sure to check for proper fit in the nozzle holster and that the nozzle can be locked in the off position. Also, be sure that when the nozzle is locked, that the dispenser cannot be activated from the locked position.
- For Reliance G6200 and G5200 series dispensers, a Healy Model 1301 or 1302 Flow Limiter may be needed to keep the flow from going over 10.0 GPM.

5.1 Select (3/G7200) & Century (3/G2200) Base Layout

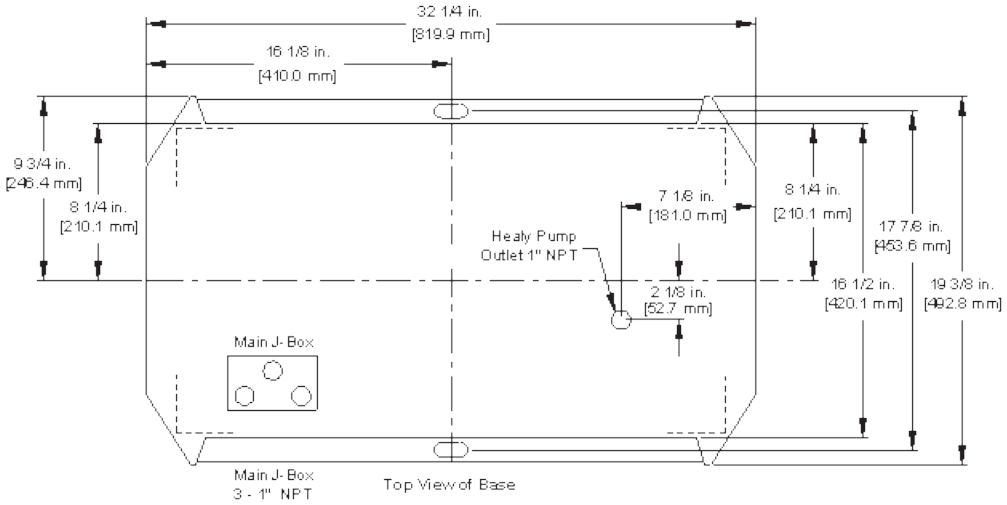

5.2 Reliance (G6200 & G5200) Base Layout

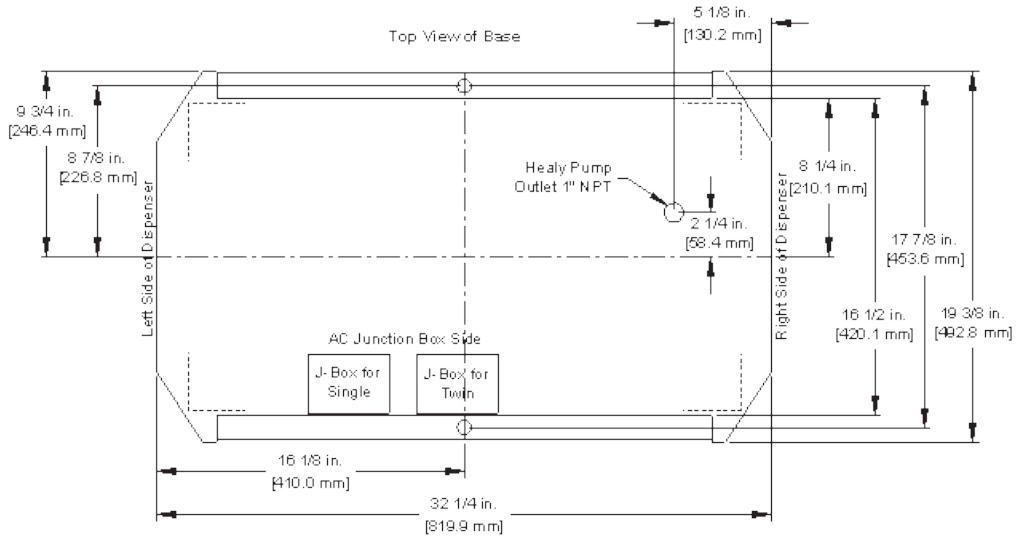

6 VP1000 Theory of Operation

The Healy Systems VP1000 is a self-contained rotary vane pump, designed for gasoline vapor recovery utilizing various parts of the Healy System Vapor Recovery product line. It is intended for use by either OEM dispenser/pump manufacturers or as an after market add-on to make existing equipment compatible with Healy System technology. In order to convert to 'others' equipment, an electronic interface is required to adapt the targeted pump/dispenser to the new vapor recovery equipment. The interface senses when authorization to dispense has been given and sends signals to the motor to operate at a low speed for one hose, or a higher speed for two hoses. It also functions to shut off the pump/dispenser if it senses that the vapor pump is not operating properly. The vacuum is regulated at a level sufficient to clear liquid gasoline from the vapor path in MPD applications. The actual amount of vapors withdrawn is controlled by the Healy nozzle, itself, in response to the liquid gasoline flow rate.

Motor Specifications	
Horsepower	1/8 HP
Voltage	120 VAC
Interface Specifications	
Input Voltage	120 VAC
Relay Current Capacity	5A AC
Input Signals	120 VAC
Motor Input Signal	5VDC@20Hz 50% Duty Cycle

7 Testing the System

- Carefully review all work completed, being sure all mechanical joints are thoroughly tightened and electrical connections sealed.
- Open the product crash valves and restore power to the dispenser.
- With the power on, but no nozzles authorized, the VP1000 should not be running (unless the ambient temperature is below 40°F), but the power LED (yellow) should be energized on the interface module.
- Authorize one handle and the vacuum system should activate when the gasoline flow control valve is engaged. Repeat for all other nozzles, individually testing each nozzle on each side of dispenser. With each authorization, one of the green LED's on the interface module should illuminate and the VP1000 activate.
- Note: For unihose dispensers, conduct individual tests for each product grade on each side of the dispener to ensure that the same LED activates for all grades on the same side. If the other LED activates, wiring needs to be corrected.
- Authorize one nozzle and listen to the speed of the VP1000. With only one nozzle activated, the speed will be slower than if a nozzle on <u>each side</u> is activated. Activate a nozzle on the other side of the dispenser and listen for the speed to change.

  Note: Some dispenser configurations may only have one side of the dispenser configured for vapor recovery. For these dispensers, verify that the VP1000 does not change speed if the other side is authorized to dispense a fuel other than gasoline.
- To test the tightness of the vapor plumbing installed on the suction side of the system requires a 0-100" water column gauge. Connect the gauge into the 1/4" test port of the reducing tee. For the location of the test port, reference the dispenser views in Section 10. Continue by following and completing the START-UP / NEW INSTALLATION/ WARRANTY/ ANNUAL TESTING FORM.

8 Troubleshooting the VP1000

- Use extreme care and caution when performing the tests listed below. If 120 VAC is accidentally applied to the fault or DC terminals, the module will be destroyed.
- With power applied to the dispenser, but no products authorized, there should be 120 VAC between neutral and 120 VAC on the module terminal strip.
- As above, with any product authorized, there should be single speed power applied to the VP1000. Verify this by checking for 2-3 VDC from OUTPUT 1 (RED WIRE) to FAULT COMMON (ORANGE WIRE), (or from OUTPUT 2 TO FAULT COMMON) also; one GREEN LED should be illuminated. With a second product authorized on the opposite side of the dispenser *i.e.* one product on each side, the motor should operate at higher speed and there should be 2-3 VDC on both output 1 and 2 (to fault common) and both GREEN LED's should be illuminated.
- With the pump running, a fault can be simulated by shorting, with a jumper wire, the "FAULT INPUT" (purple wire) to FAULT COMMON (orange). This should cause the motor to shut off, the solenoid valves to lose power and the dispenser to shut down. Also, as long as the short is maintained, the red LED will be illuminated. Removing the short will not automatically reset the module. To reset the module, remove the short, remove power to the dispenser for twenty seconds and restore power. The module should now be reset and the red LED extinguished. This can also be accomplished by using the power reset (PWR RESET) on the module.
- If diagnosing a problem where the LED is already illuminated, a steady light indicates a low current condition, therefore expect a vane or rotor problem. If the LED is blinking, that indicates a high current condition and one would expect to find a jammed rotor or vapor line flooded with product. See Start-up/ New Installation/ Warranty/ Annual Testing Form.
- The electronics of the motor will make three attempts to have a successful start of the motor. If it detects a problem, on the fourth unsuccessful start, it will short the fault line to signal minus (DC-) and shut down the electronics.

MC100 Interface Module

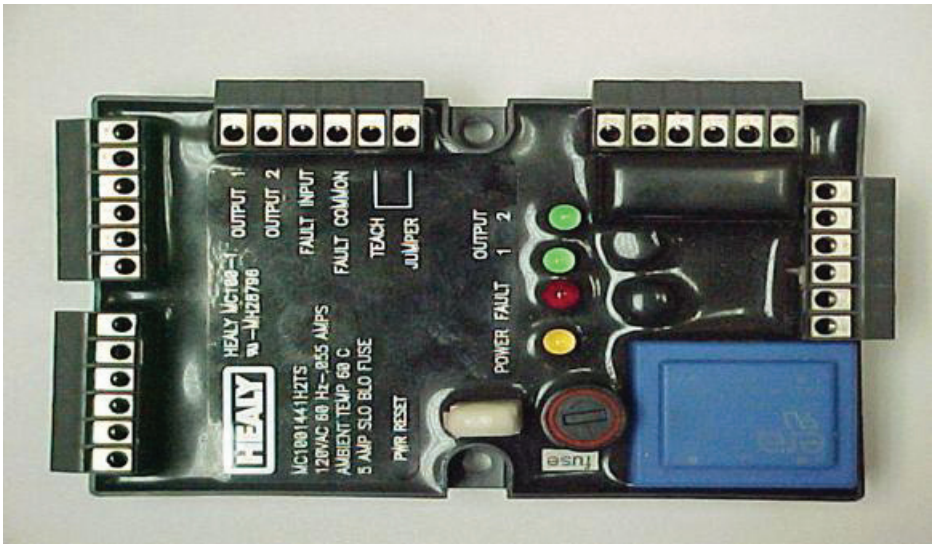

9 VP1000 Vane & Rotor Service & Replacement Guide

Caution **Disconnect power before beginning service.**

1. The work area **must** be clean and have sufficient lighting.
2. Disconnect the vapor piping connected to the **IN** and **OUT** ports of the VP1000 cover assembly.
3. Remove the four Allen head screws and lock washers that secure the pump cover assembly to the pump housing and remove the cover carefully.

Caution **Use a spill cloth when removing the cover, as there may be some gasoline inside the pump cavity**.

4. Carefully turn the rotor assembly by hand until the shaft key notch is at the 12 o'clock position. (See Figure 1)
5. Remove the rotor, vanes and shaft key from the pump housing.

Note: Place your hand or a container under the rotor while removing. Do not use any sharp objects that would scratch the surfaces of the pump cavity, pump shaft, rotor, or vanes.

6. Rotate the shaft by hand. If the shaft does not rotate freely, the entire vacuum pump needs replacement (p/n VP1000-5).
7. If the rotor and vanes are cracked, chipped, excessively worn or excessively dirty, the rotor and vanes should be replaced because cleaning will not remedy these conditions (p/n VP1000VRC or VP1000VRC-P).
8. If there is no visible damage, use a lint-free cloth with isopropyl alcohol to clean the rotor and vanes.
9. Using a lint-free cloth with isopropyl alcohol, thoroughly clean: the inside of the pump ring and rear of the pump cavity, the rotor shaft, and the inside of the pump cover.
10. Reposition the shaft (if necessary) so that the shaft key notch is in the 12 o'clock position. Install the cleaned original or new shaft key onto the shaft.
11. Carefully install the cleaned original or new rotor onto the shaft followed by the cleaned original or new vanes into the rotor.

Note: The rotor assembly should slide on to the shaft easily, without excessive force. (Rotors and vanes are reversible)

12. Lightly lubricate and install the new O-Ring for the pump housing.

Note: Do not allow any lubricant to get inside the pump housing.

13. Install the pump cover using the four Allen head screws and lock washers removed in step 3 and cross tighten.

Note: Use caution when sliding the pump cover over the O-Ring seal to prevent cutting or tearing.

14. Re-connect the vapor piping to the **IN** and **OUT** ports of the pump cover assembly that was removed in Step 2.
15. Re-apply power. Test for normal operation. (See VP1000 Vacuum Performance Test Procedure)

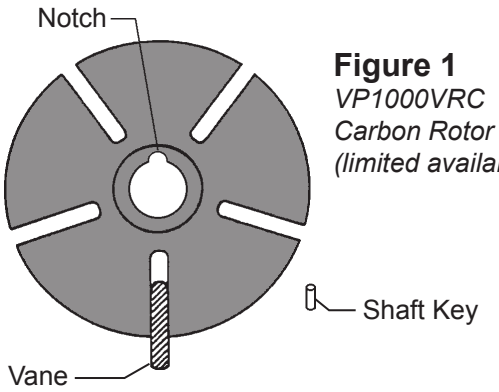

Figure 1
VP1000VRC Carbon Rotor (limited availability)

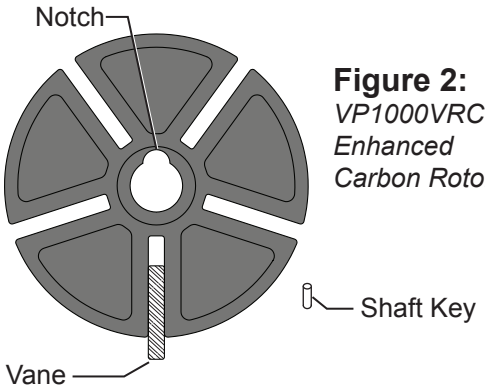

Figure 2:
VP1000VRC-P Enhanced Carbon Rotor

10 View of Dispensers

10.1 View of Reliance Dispenser (G6200 & G5200)

While the Twin II model is shown, the location of the Healy components for the Twin I and the Single are the same.

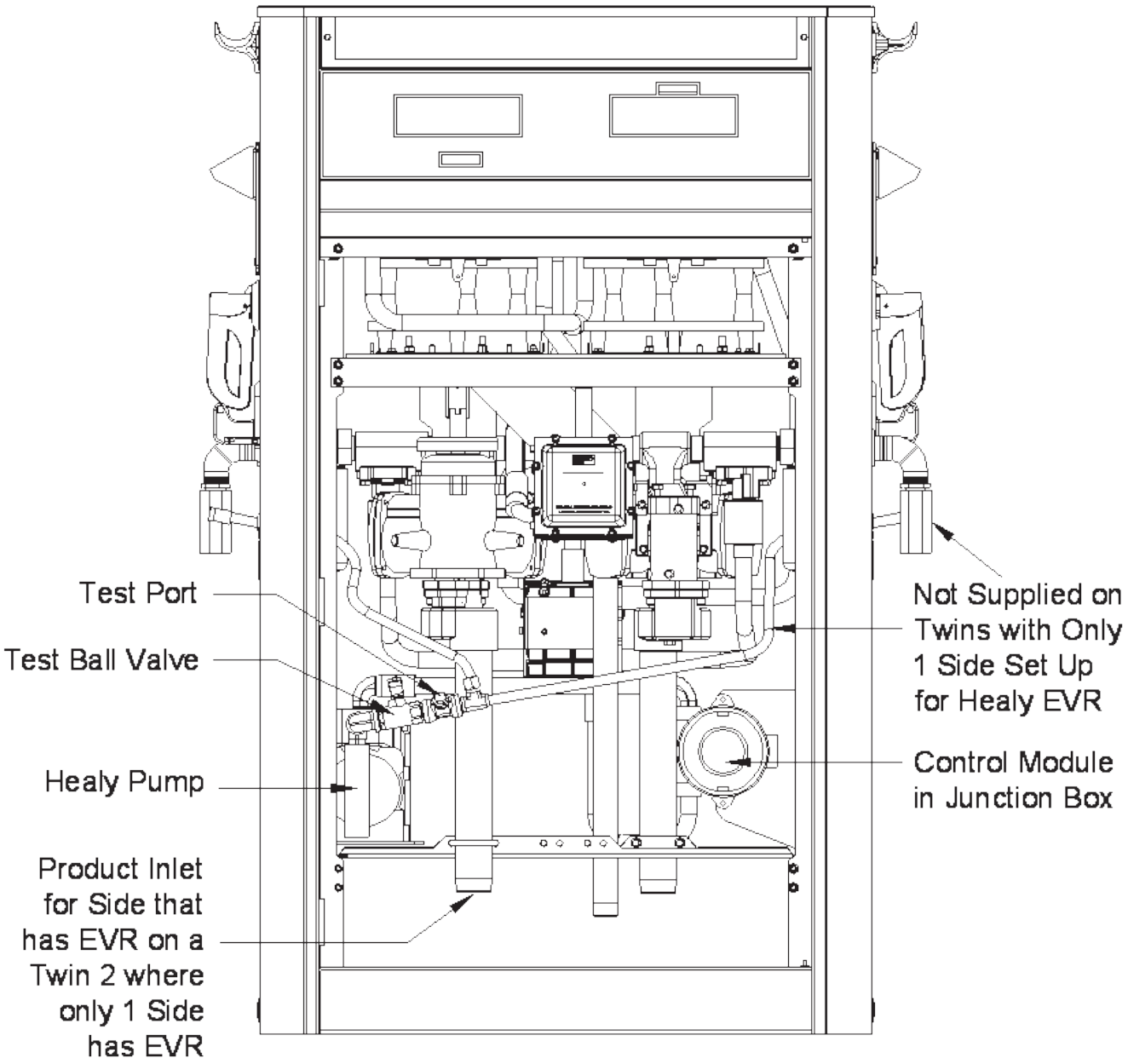

10.2 View of Select (3/G7200) & Century (3/G2200) Dispenser

While the Select Twin II model is shown, the location of the Healy components for all of the other Select & Century models are the same.

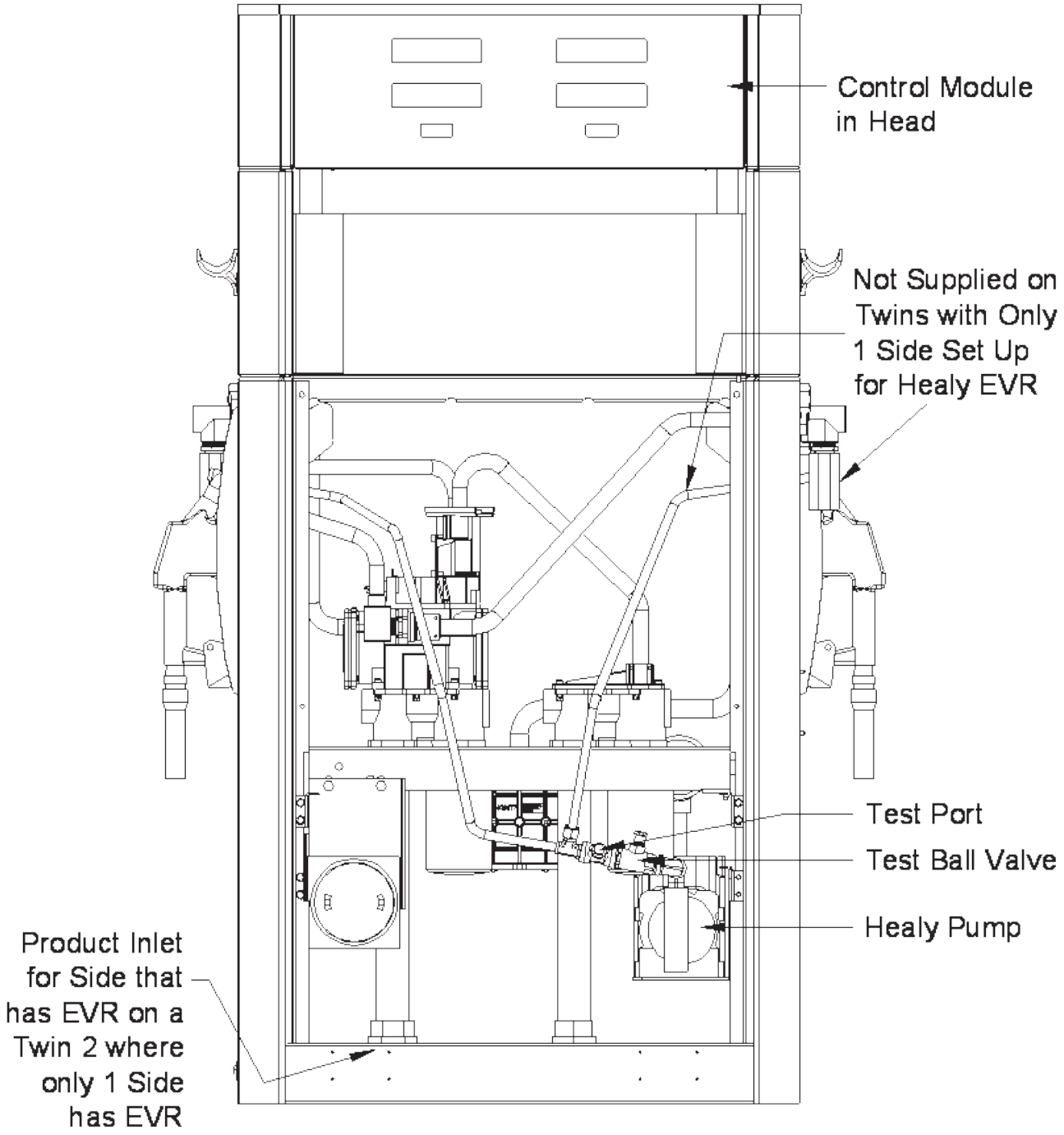

START-UP/NEW INSTALLATION/ WARRANTY/ ANNUAL TESTING FORM (Rev. 10/07)
HEALY VP1000 VACUUM PUMP

Date_____

BOTH SIDES OF THIS TEST FORM MUST BE COMPLETED FOR NEW INSTALLATIONS

- **Start-up / New installations – complete SIDE A and sections 3, 4, 5 and 6 of SIDE B. Submit forms to Healy Systems.**
- **Warranty Service or Annual Testing – complete contact information, dispenser make, vacuum pump serial # and the tests in sections 1 and 2 on SIDE A and conduct the appropriate tests specified on SIDE B. Submit Forms to Healy Systems.**

SERVICE COMPANY NAME	TELEPHONE	
SERVICE TECHNICIAN	HEALY TECH CERT #	
STATION ADDRESS	CITY	STATE
DISPENSER MAKE	**VACUUM PUMP SERIAL #**	

SIDE A

DISPENSER EQUIPMENT CHECKLIST - Parts A-1 and A-2		**YES**	**NO***
A-1	Is all the installed dispenser hanging hardware listed in Exhibit 1 of Executive Order VR-201 or VR-202?		
A-2	Proper installation of the VP1000 requires the test port and ball valve on the inlet side of the vacuum pump. Are the test port and ball valve installed correctly?		
	***If the answer to either A-1 or A-2 is NO, the Healy Warranty is Void.**		

A-3

- THE FOLLOWING TEST WILL PERFORM A POSITIVE PRESSURE LEAK CHECK OF THE VACUUM PUMP, DISPENSER VAPOR PIPING, HANGING HARDWARE AND ALL NOZZLES ON BOTH SIDES OF THE DISPENSER.
- THE VP1000 OUTLET IS NOT CONNECTED TO UNDERGROUND PIPING DURING THIS TEST.

CAUTION: REGULATE GASEOUS NITROGEN TO 2.5 PSI (~70" WC) MAXIMUM BEFORE TESTING

1. Install a 0-100 inch water column (" wc) mechanical gauge at the VP1000 test port.
2. Use the water column gage positive (high) pressure port.
3. Gaseous nitrogen gas can now be connected to the outlet (exhaust) port of the VP1000.
4. Test pressure **cannot** exceed 70" wc.
5. **Slowly** introduce the gaseous nitrogen to a pressure between 60 – 70" wc.
6. After reaching the pressure range, close the valve supplying the gaseous nitrogen.
7. Record the initial pressure reading on the gauge - observe and record the final pressure reading after 60 seconds.
8. Leaks must be repaired when the pressure falls more than 4" wc in 60 seconds.
9. Retest until all leaks have been repaired.
10. Record test results in Section A-4.

A-4 **PRESSURE TEST** **2.5 PSI (~70"wc) Maximum**	**Initial Pressure test reading ("wc)**	**Pressure test reading after 60 seconds ("wc)**

START-UP/NEW INSTALLATION/ WARRANTY/ ANNUAL TESTING FORM (Rev. 10/07)
HEALY VP1000 VACUUM PUMP

Date_____

BOTH SIDES OF THIS TEST FORM MUST BE COMPLETED FOR NEW INSTALLATIONS

- **Start-up / New installations – complete SIDE A and sections 3, 4, 5 and 6 of SIDE B. Submit forms to Healy Systems.**
- **Warranty Service or Annual Testing – complete contact information, dispenser make, vacuum pump serial # and the tests in sections 1 and 2 on SIDE A and conduct the appropriate tests specified on SIDE B. Submit Forms to Healy Systems.**

SIDE B

Warranty Service Complete Troubleshooting Sections **B-1 and B-2**	*Start-up/ New Installations/ Annual Testing* Complete Sections **B-3 through B-6**

B-1

Control Module Fault Light

(Circle one) Flashing (LED) Steady (LED)

1. All fault conditions require removal and cleaning or replacement of the rotor and vanes located inside the vacuum pumps round front cover assembly. Use the **VP1000 ROTOR & VANE SERVICE AND REPLACEMENT GUIDE** in the applicable dispenser retrofit manual of the ARB Approved Installation, Operation and Maintenance Manual for Executive Orders VR-201-M and VR-202-M.
2. Clean all surfaces including vanes, rotor, rotor housing and cover assembly.
3. Manually spin and inspect the motor shaft for bearing wear before re-installing the rotor kit.
4. Replace motor when bearings or shaft are damaged or worn.
5. Check O-ring seal before replacing rotor cover assembly.

B-2

Re-Assemble / Reset Vacuum Pump and Module. (Power must be removed from both the vacuum pump and the **module for 20 seconds to reset the system**) using the power reset switch on the MC100 module.

B-3

Dispenser Vapor Line Integrity Test

1. Install 0-100 inch water column (“ wc) vacuum mechanical gauge at the VP1000 test port.
2. Authorize the dispenser for fueling. The VP1000 will begin to run.
3. Close the ball valve at the pump inlet.
4. Record the initial vacuum reading on the gauge – observe and record the final vacuum reading after 60 seconds.
5. Open the ball valve at the pump inlet.
6. Leaks must be repaired when the vacuum reading falls more than 4” wc in 60 seconds.
7. Retest until all leaks have been repaired.
8. Record data in Section B-4.

Note: If the initial vacuum reading is less than 60” wc, it could indicate a problem with the VP1000. Remove the dispenser from service. Use the troubleshooting section of the manual to investigate problem or contact the FFS Technical Help Desk at 800-984-6266 for assistance.

B-4

VACUUM TEST Using VP1000 as vacuum source	Initial Vacuum test reading (“ wc)	Vacuum test reading after 60 sec. (“ wc)

B-5

Dispenser Vaacuum Test

With one side of the dispenser authorized (VP1000 running) and the ball valve at the pump inlet open, dispense in handheld position a minimum of 0.5 gallons of fuel into a vehicle or test tank. Record the vacuum level while dispensing. Repeat test for the other side of the dispenser.

1. Side “A” Dispensing Vacuum _____” wc
2. Side “B” Dispensing Vacuum _____” wc

Note: If the dispensing vacuum is less than 60” wc, remove the dispenser from service. See the troubleshooting section of the manual or contact FFS Technical Help Desk at 800-984-6266 for assistance.

B-6

Audible Increase Test

Test the VP1000 Vacuum Pump for normal operation. Use the 6 step procedure titled, “Testing the VP1000 Vacuum Pump for normal operation using the following test procedure:” in Section 1.1 (Weekly Inspection and Testing) of the Healy Systems Scheduled Maintenance document in the ARB Approved Installation, Operation and Maintenance Manual for the Healy Phase II EVR System not Including ISD. This is to verify that the pump recognizes when both sides of the dispenser are activated for fueling.

Does the VP1000 Vacuum Pump change speeds (audible increase) when both sides are activated for fueling?

Yes No

If the answer is no, **use the troubleshooting section of the manual to investigate problem or contact the FFS Technical Help Desk at 800-984-6266 for assistance.**

Repairs - Comments	To Obtain Returned Materials Authorization number (RMA#) Call 800-984-6266 Forms can be faxed to Franklin Fueling Systems Customer Service at 800-225-9787

INSTALLATION & OPERATION MANUAL

Wayne
Healy Phase II
EVR System
(Assist)

For

Reliance G5200 Series

Reliance G6200 Series

Select 3/G7200 Series

Century 3/G2200 Series

Copyright ©2007 Dresser, Inc.
All rights reserved.
Printed in the United States of America.

The information in this publication is proprietary and confidential. No part of this publication may be electronically or mechanically reproduced, stored in a retrieval system, or transmitted, in any form or means, without express written permission by Dresser, Inc. Translation of this material to another language without express written permission by Dresser, Inc. is prohibited.

The information in this publication is for informational use only and is subject to change without notice. The contents should not be construed as a commitment by Dresser, Inc. who assumes no responsibility or liability for inaccuracies that may appear in this publication.

Wayne Division, Dresser, Inc. 3814 Jarrett Way, Austin, TX 78728 (512) 388-8311

©2007 Dresser, Inc.