Executive Order VR-201-N
Healy Phase II EVR System
Not Including ISD

Exhibit 2

System Specifications

This exhibit contains the installation, maintenance and compliance standards and specifications that apply to the Healy Phase II EVR System installed in a gasoline dispensing facility. All components must be installed in accordance with the specifications in the **ARB Approved Installation, Operation and Maintenance Manual**. Installation, maintenance and repair of system components, including removal and installation of such components in the course of any required tests, shall be performed by technicians certified by the appropriate manufacturer. Additional certifications may be required in accordance with local district requirements. Provided that there are no other local district requirements, a GDF Owner / Operator can remove and install nozzles, curb hoses, breakaways, flow limiters and whip hoses without a manufacturer certification

Nozzle

1. A vapor collection boot shall be installed on the nozzle at the base of the spout, as shown in **Figure 2B-1**.

2. The Healy Model 900 nozzle has an integral vapor valve which prevents the loss of vapor from the underground storage tanks, ensures proper operation of the system and prevents the ingestion of air into the system. Any dispenser that has a nozzle installed that is determined to have a defective vapor valve, as described in items 2.1 or 2.2 below, shall be immediately removed from service (including nozzle(s) on both sides of dispenser) and a call for repair made immediately.

   2.1. The maximum allowable leak rate for the nozzle vapor path, as determined by TP-201.2B, shall not exceed the following:

   0.038 cubic feet per hour (CFH) at a pressure of two inches water column (2.00” wc), and
   0.10 CFH at a vacuum of one hundred inches water column (-100.00” wc)

   2.2. Verification of the integrity of the vapor valve can be performed on installed nozzles using the nozzle bag test procedure in Exhibit 7.

Vapor Collection

1. The V/L ratio of the system shall be **1.05 plus or minus 0.10 (0.95 to 1.15)**, measured at a flow rate between six and ten gallons per minute (6.0 – 10.0 gpm). *Any fueling point whose V/L ratio is determined to be at or below 0.80 shall be deemed defective and removed from service.* The V/L ratio shall be determined by using the test procedure in Exhibit 5 with the shut-off port excluded, or with an ARB approved alternate test procedure. See Section 7 of Exhibit 5 for guidance on V/L adjustment.

2. Inoperative vapor pumps, as determined by the ***ARB Approved Installation, Operation and Maintenance Manual***, constitute a defect.

3. For unihose dispensers, any modifications or repairs to the nozzle, hanging hardware or vacuum pump done to bring one fuel grade V/L into compliance at a fueling point invalidates the results of any previous fuel grade(s) tested before the alteration. All fuel grades at that fueling point shall be tested again to verify compliance.

Inverted Coaxial Hoses

1. The maximum length of the hose assembly, including hose adaptor, whip hose, breakaway, flow limiter (optional) and inverted coaxial hose, measured at the base of the nozzle, shall be no more than twenty (20) feet.

2. Any hose configuration is allowed.

Breakaway Couplings

1. Testing is required after reconnecting the breakaway to ensure proper operation and no observed leaks. The procedure for reconnecting breakaway and fueling point testing after a drive-off, referenced in Section 1.4 of Healy Systems Scheduled Maintenance, shall be conducted to verify that breakaway, hose and nozzle are operating properly after a drive-off.

Flow Limiters

1. Flow limiter is mandatory when the flow rate is greater than 10.0 gallons per minute to comply with U.S. EPA requirement.

Clean Air Separator Pressure Management System

1. The Clean Air Separator (CAS) is a passive gasoline storage tank ullage pressure management system, with no electrical requirements. The Clean Air Separator vapor integrity shall be evaluated using the test procedure outlined in Exhibit 4 of this Executive Order.

    a. The system shall be removed from service when the Clean Air Separator fails the leak decay test outlined in Exhibit 4.

    b. Unless there is maintenance or testing being conducted on the Clean Air Separator, the system shall be removed from service when the four ball valves are not locked in the positions shown in **Figure 2B-2** or **2B-2H** for normal Clean Air Separator operation. Figure 2B-2 applies to vertical CAS installations and Figure 2B-2H applies to horizontal CAS installations.

2. The Clean Air Separator shall be installed within 100 feet from the vent line(s), and the associated piping shall be sloped 1/8" per foot minimum toward the vent line(s).

Pressure/Vacuum Vent Valves for Gasoline Storage Tank Vents

1. All P/V vent valves shall be an ARB-certified P/V vent valve for a Phase I system.

2. At least one pressure/vacuum (P/V) vent valve shall be installed on each gasoline storage tank vent. The maximum number of P/V vent valves allowed and P/V vent valve performance specifications are listed in the applicable Phase I EVR Executive Order. Vent lines may be manifold to minimize the number of P/V vent valves and potential leak sources, provided the manifold conforms to all applicable fire regulations. At least one P/V vent valve shall be installed on vents if a manifold is incorporated. **Figure 2B-3** or **2B-3H** shows a typical manifold configuration for a single P/V vent valve with the Clean Air Separator. If two or more P/V vent valves are desired, they shall be installed in parallel, so that each can serve as a backup to the other if one should fail to open properly. **Figure 2B-4** or **2B-4H** shows a typical manifold configuration for two P/V vent valves installed in parallel with the Clean Air Separator. **Figure 2B-5** or **2B-5H** shows a typical manifold configuration for three P/V vent valves installed in parallel with the Clean Air Separator. **Figure 2B-6** or **2B-6H** shows a typical configuration for a P/V vent valve mounted on a single 3" vent line with the Clean Air Separator. Figures 2B-3, 2B-4, 2B-5 and 2B-6 apply to vertical CAS installations. Figures 2B-3H, 2B-4H, 2B-5H and 2B-6H apply to horizontal CAS installations.

Vapor Recovery Piping Configurations

NOTE: Vapor Return Piping shall meet the requirements specified in section 4.11 of CP-201.

1. Vapor Return and Vent Lines

   a. For facilities installed on or after April 1, 2003, all vapor return and vent lines shall be a minimum nominal internal diameter of 2 inches from the dispensers or the vent stacks to the first manifold. All lines after the first manifold and back to the underground storage tank shall have a minimum nominal internal diameter of 3 inches.

      Note: Facilities permitted by a local district prior to April 1, 2003 shall be required to meet the three inch diameter standard only upon facility modification requiring exposing at least 50 percent of the underground vapor return piping.

After backfilling the vapor return and vent lines, the maximum pressure drop shall not exceed 0.5 inches WC at 60 cubic feet per hour as determined by TP-201.4, Dynamic Backpressure. The pressure drop shall be measured from the dispenser riser to the UST with pressure/vacuum vent valves installed and with the poppeted Phase I vapor connection open.

b. For existing installations, the maximum pressure drop through the system shall not exceed 0.5 inches WC at 60 cubic feet per hour as determined by TP-201.4, Dynamic Backpressure. The pressure drop shall be measured from the dispenser riser to the UST with the pressure/vacuum vent valves installed and with the poppeted Phase I vapor connection open.

Note: The V/L test from Exhibit 5 may be used to verify proper operation of the system, in lieu of measuring the pressure drop through the lines, provided that at least two gallons of product are introduced into the system through each dispenser riser, prior to the test.

2. All vapor return lines shall have a minimum slope of 1/8 inch per foot from the dispenser riser to the riser of the underground storage tank (UST). A slope of 1/4 inch or more per foot is recommended wherever feasible. The vapor return path from any dispenser riser to the UST shall be free of liquid or fixed blockage.

Exception: When it is not possible to achieve the necessary minimum slope from the dispenser back to the underground storage tanks, a low point Liquid Condensate Trap (i.e. knock out pot, thief port) can be utilized as long as the conditions under **Liquid Condensate Traps** in this Exhibit 2 are met.

3. The dispenser shall be connected to the riser with either flexible or rigid material that is listed for use with gasoline. The dispenser-to-riser connection shall be installed so that any liquid in the lines will drain toward the gasoline storage tank. The internal diameter of the connector, including all fittings, shall not be less than one-half inch (1/2”).

Note: The dispenser-to-riser connection is defined as the piping connection between the outlet of the vacuum pump and the inlet of the dispenser riser. A vapor shear valve may also be part of the riser connection.

4. There is no length restriction for the vapor return piping of the system as long as the system complies with the maximum pressure drop requirement of Item 1 (or the V/L option).

5. No product shall be dispensed from any fueling point at a GDF installed with the Healy Phase II EVR System if there is a vapor line that is disconnected and open to the atmosphere.

Dispenser Vapor Piping

1. Any dispenser with a dispenser piping test valve in the closed position shall be considered a defect.

2. The ball valve shall be installed between the test port and the vacuum pump. The ball valve and test port shall be located on the inlet side of the vacuum pump.

Liquid Condensate Traps

1. There shall be no vapor leaks when tested in accordance with the latest version of TP 201.3, **Determination of 2 Inch WC Static Pressure Performance of Vapor Recovery Systems of Dispensing Facilities**.

2. The Liquid Level Sensor shall alarm within five (5) minutes when tested in accordance with Exhibit 9, **Liquid Condensate Trap Compliance Test**.

3. The Liquid Level Sensor audible alarm shall be installed at a location that is most likely to be heard by the station attendant during normal station operation (e.g. cash register).

4. The Liquid Evacuation System shall automatically evacuate gasoline when tested in accordance with Exhibit 9, **Liquid Condensate Trap Compliance Test.**

5. A metal tag specifying the capacity of the Liquid Condensate Trap shall be installed and maintained as specified in the Installation, Operation, and Maintenance Manual.

Phase I System

1. The Phase I system shall be an ARB-certified system that demonstrates compliance with the static pressure decay test criteria contained in the latest version of TP-201.3.

Maintenance Records

1. Each GDF operator/owner shall keep records of maintenance performed at the facility. Such records shall be maintained on site in accordance with district requirements or policies. The records shall include the maintenance or test date, repair date to correct test failure, maintenance or test performed, affiliation, telephone number, name and Certified Technician Identification Number of individual conducting maintenance or test. Additional information may be required in accordance with local district requirements. An example of a GDF Maintenance Record is shown in **Figure 2B-7**.

2. Maintenance shall be conducted in accordance with Healy Systems Scheduled Maintenance section of the ***ARB Approved Installation, Operation, and Maintenance Manual***.

3. Reconnection of breakaways shall be included in the maintenance records.

Executive Order VR-201-N
Healy Phase II EVR System
Not Including ISD

Exhibit 2
Figure 2B-1
Vapor Boot for Healy 900 Nozzle

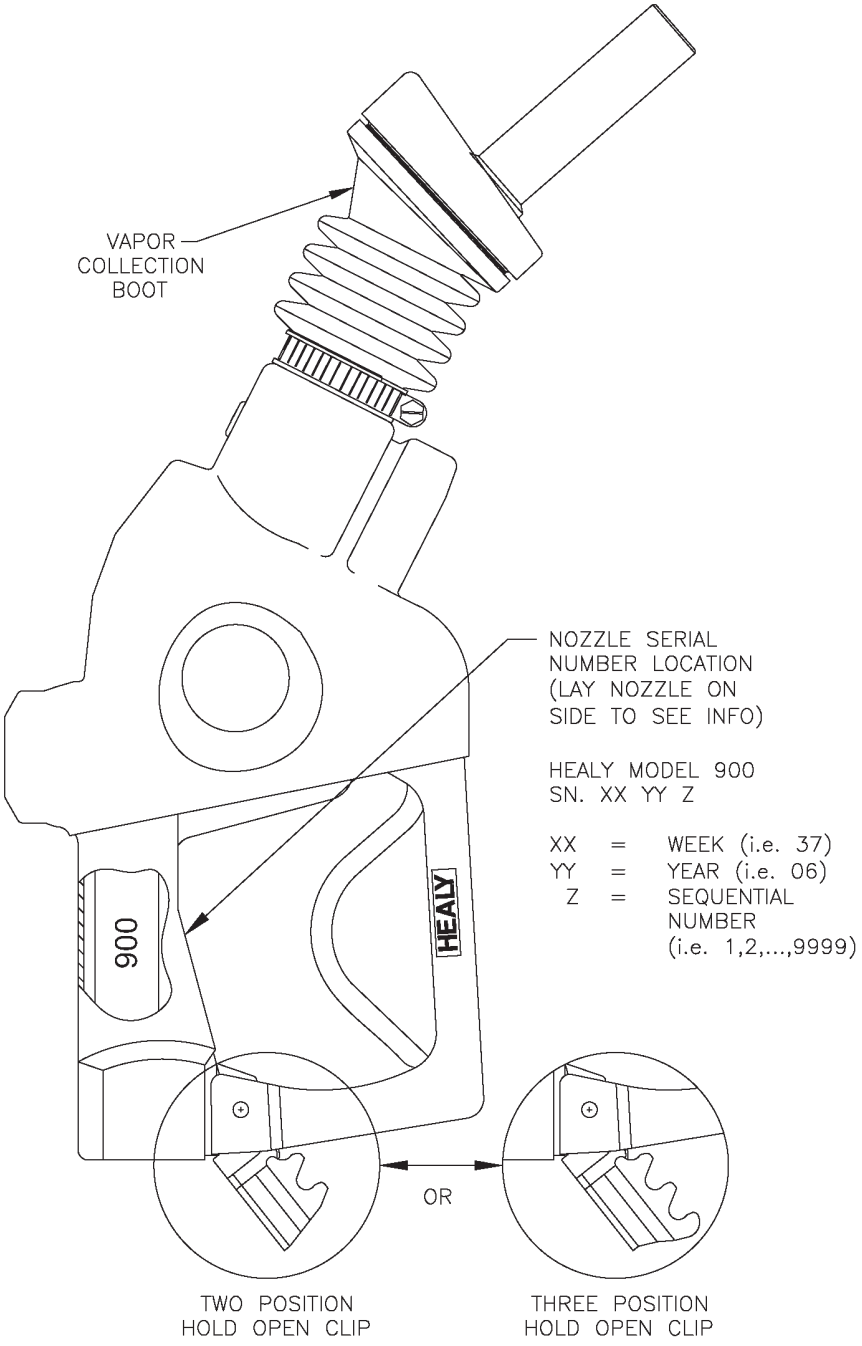

Executive Order VR-201-N
Healy Phase II EVR System
Not Including ISD

Exhibit 2
Figure 2B-2
Clean Air Separator Normal Operation Configuration

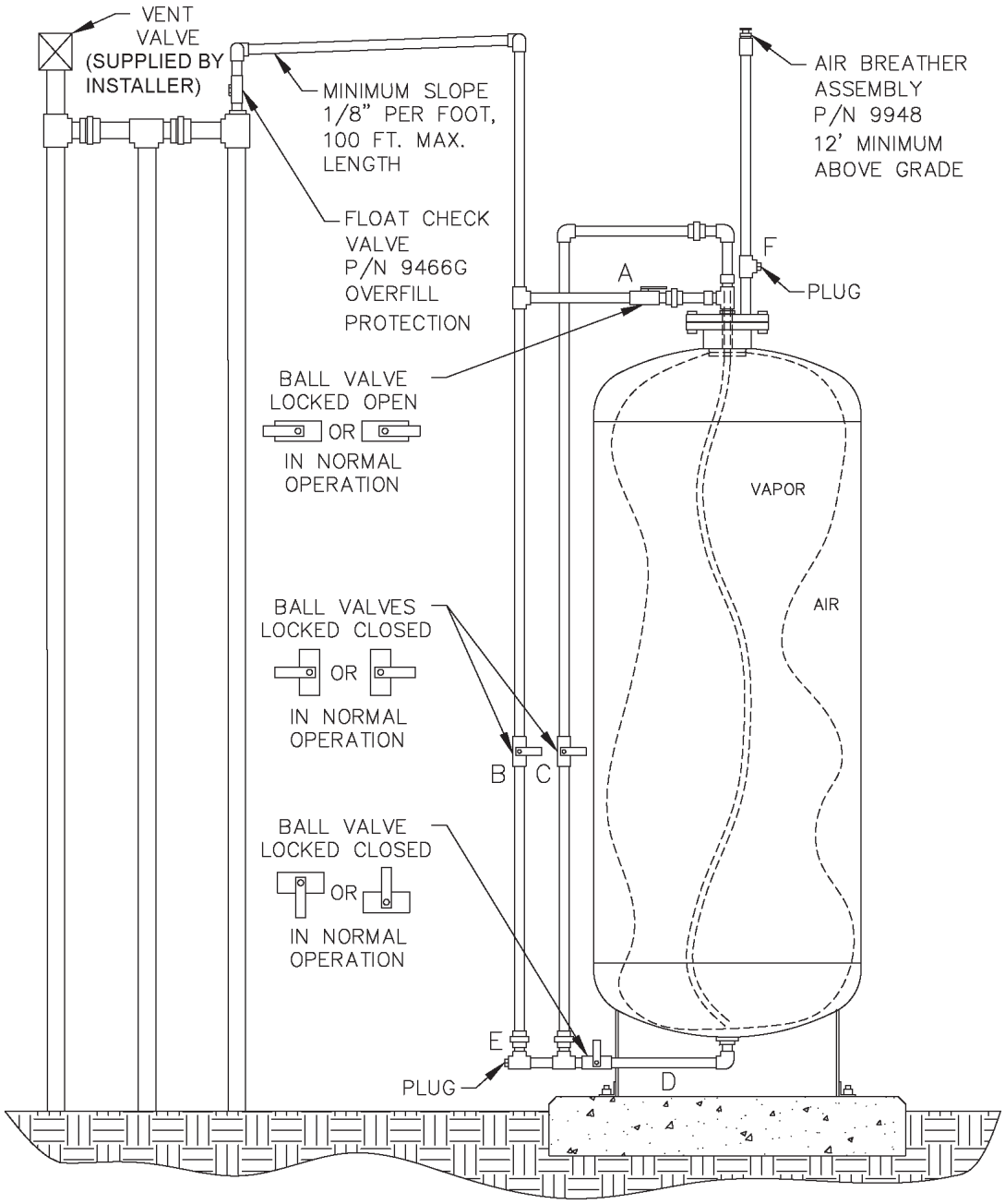

Executive Order VR-201-N
Healy Phase II EVR System
Not Including ISD

Exhibit 2
Figure 2B-2H
Clean Air Separator Normal Operation Configuration

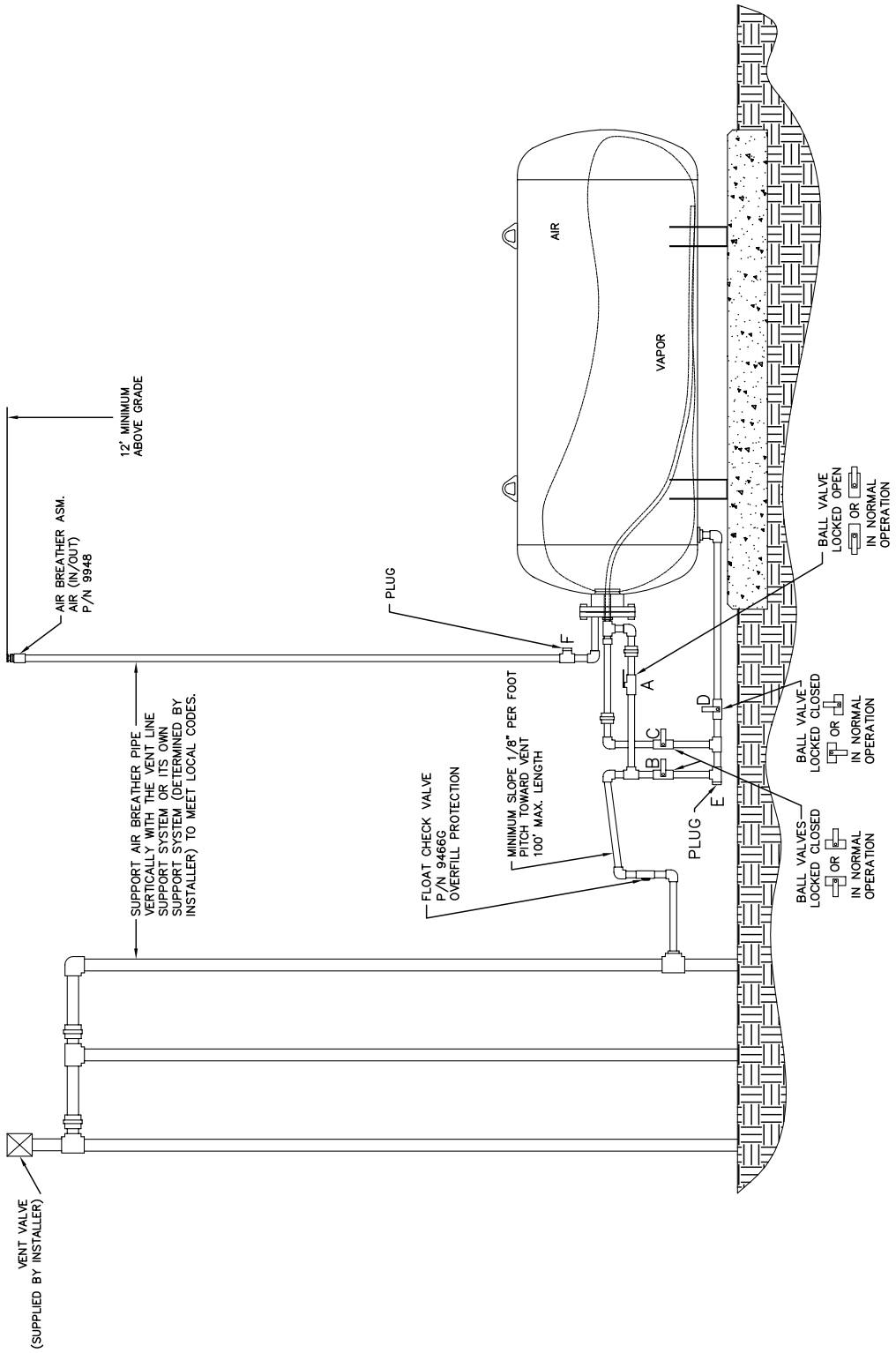

Executive Order VR-201-N
Healy Phase II EVR System
Not Including ISD

Exhibit 2
Figure 2B-3
Typical Installation of a Single P/V Vent Valve Manifold with Healy Clean Air Separator

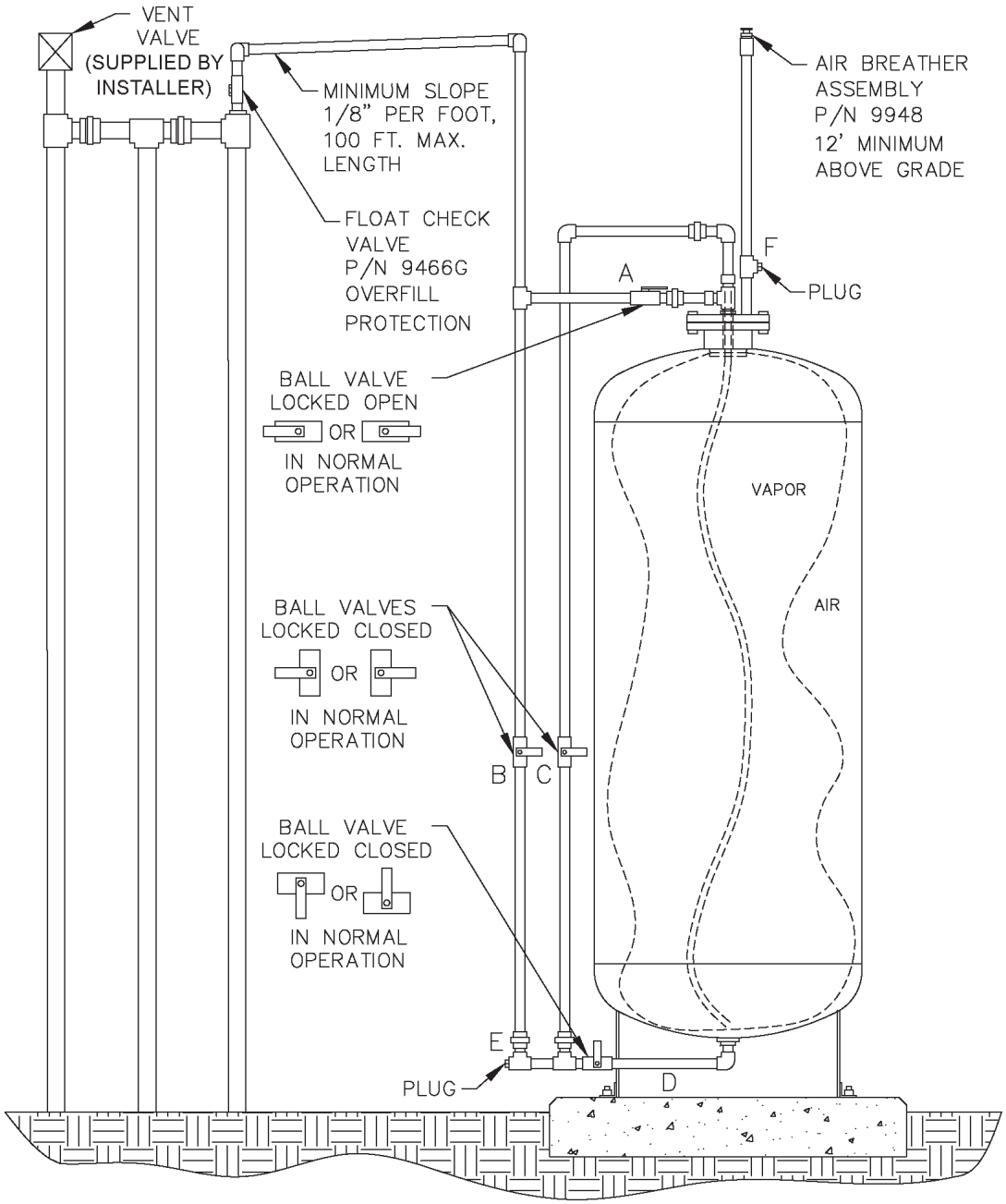

Executive Order VR-201-N
Healy Phase II EVR System
Not Including ISD

Exhibit 2
Figure 2B-3H
Typical Installation of a Single P/V Vent Valve Manifold with Healy Clean Air Separator

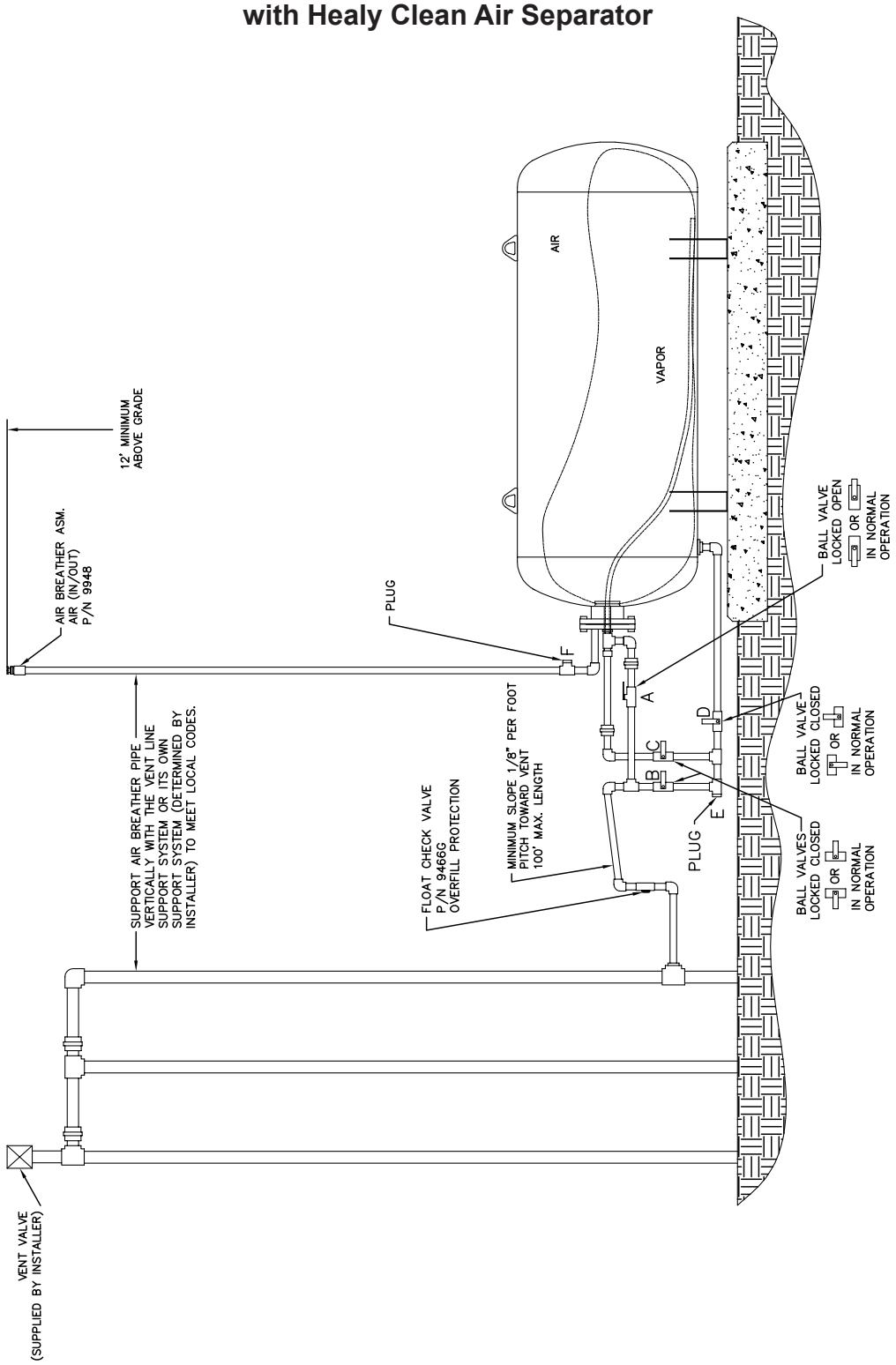

Executive Order VR-201-N
Healy Phase II EVR System
Not Including ISD

Exhibit 2
Figure 2B-4
Typical Installation of a Two P/V Vent Valve Parallel Manifold with Healy Clean Air Separator

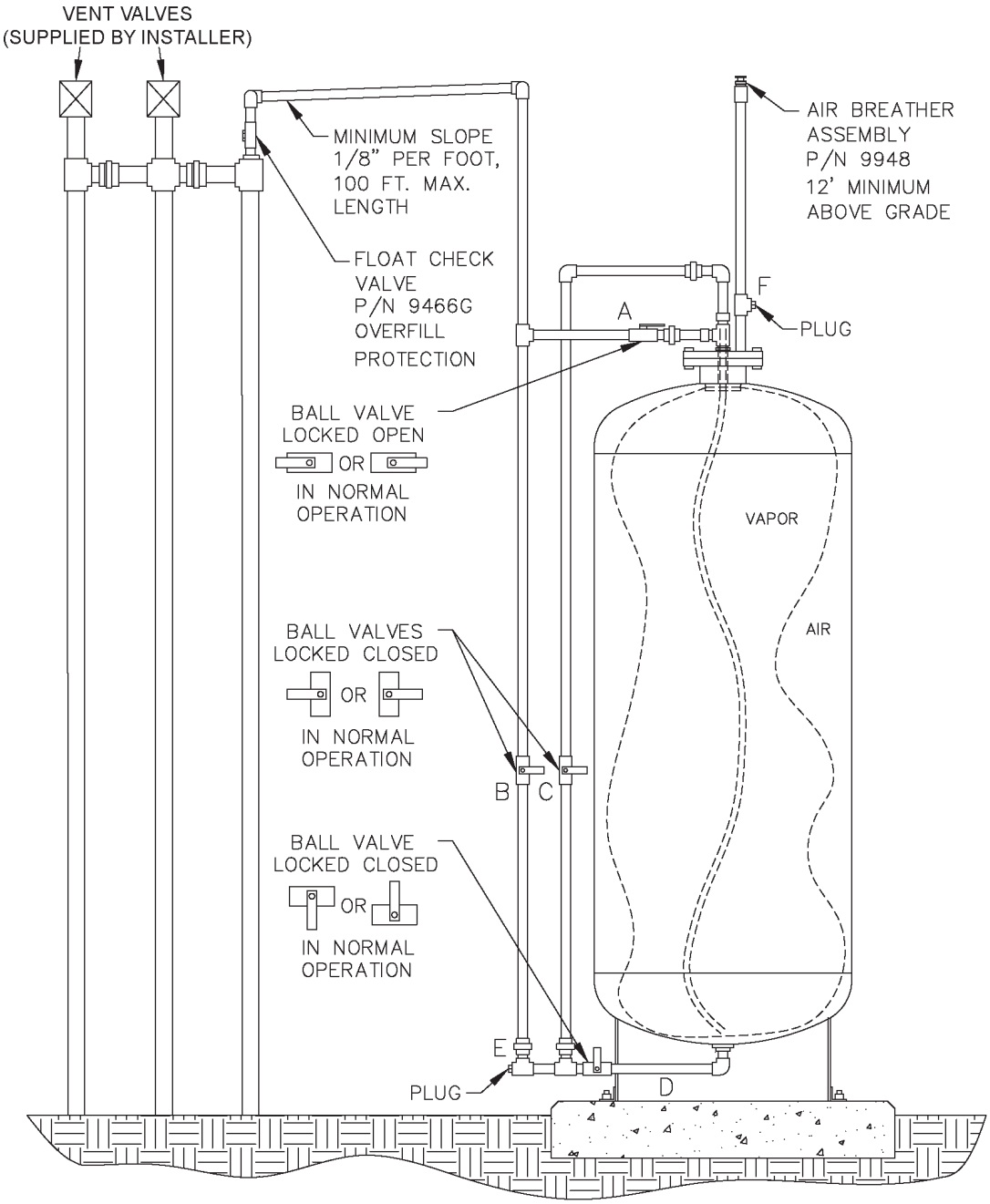

Executive Order VR-201-N
Healy Phase II EVR System
Not Including ISD

Exhibit 2
Figure 2B-4H
Typical Installation of a Two P/V Vent Valve Parallel Manifold with Healy Clean Air Separator

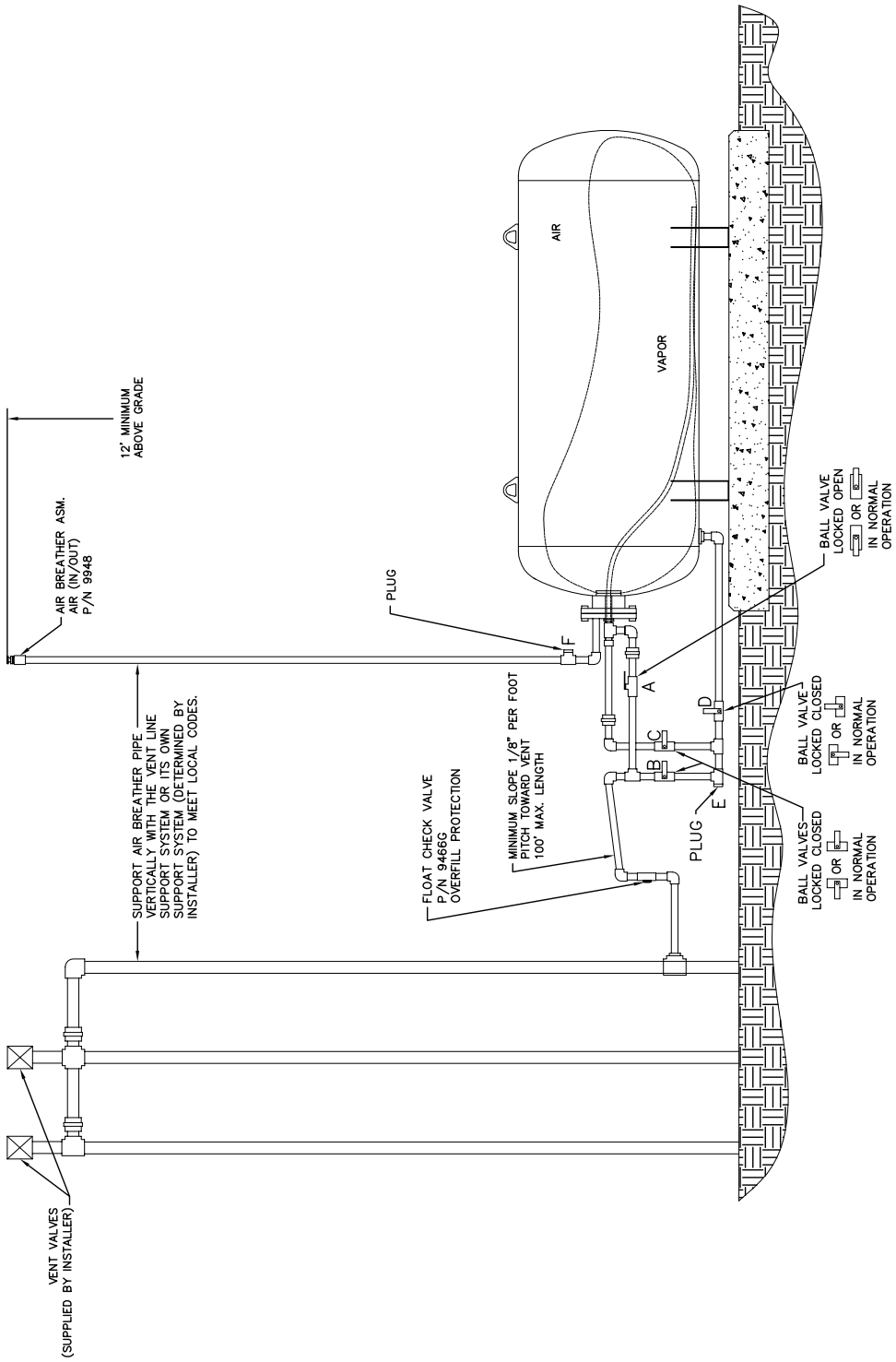

Executive Order VR-201-N
Healy Phase II EVR System
Not Including ISD

Exhibit 2
Figure 2B-5
Typical Installation of a Three P/V Vent Valve Parallel Manifold with Healy Clean Air Separator

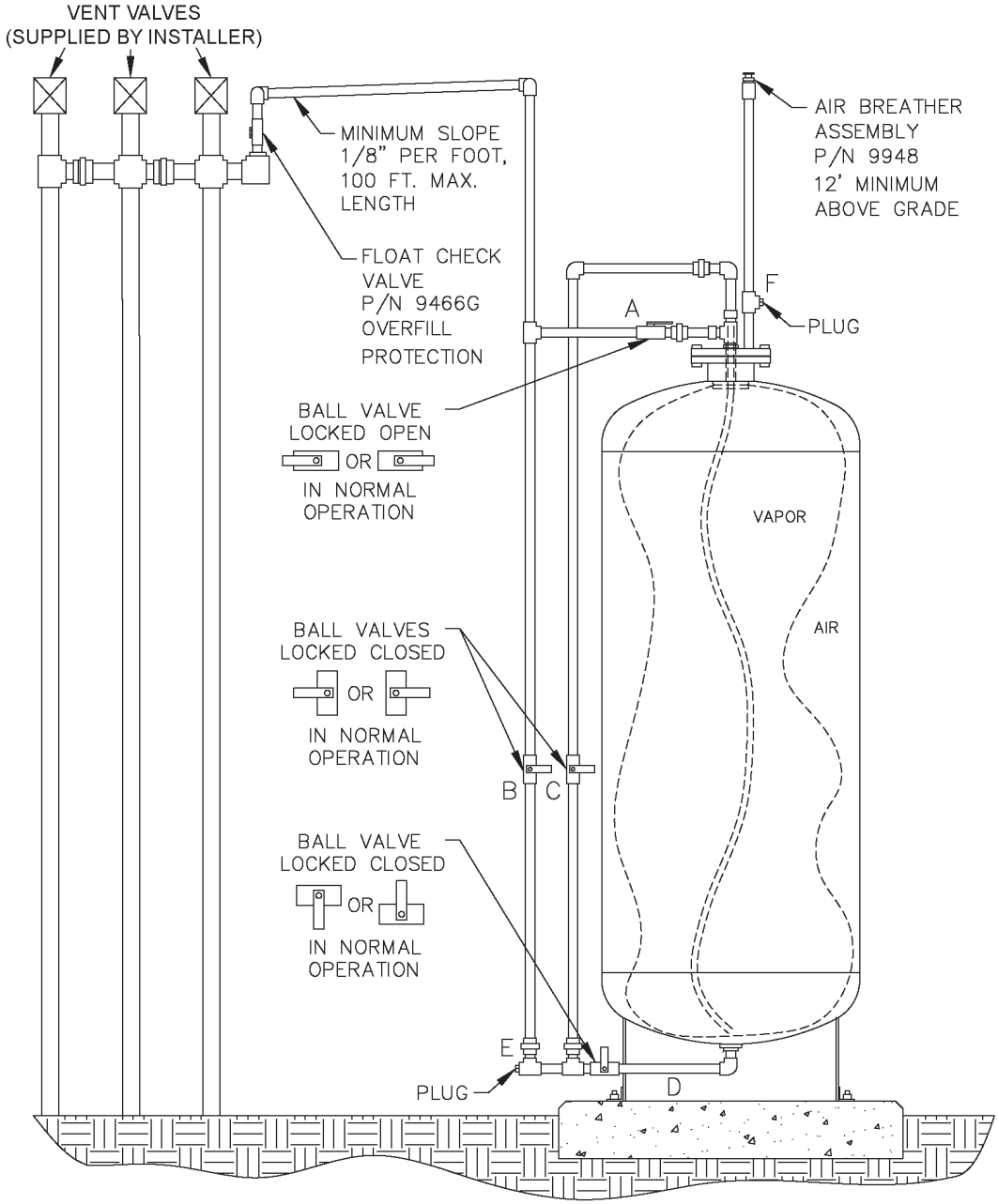

Executive Order VR-201-N
Healy Phase II EVR System
Not Including ISD

Exhibit 2
Figure 2B-5H
Typical Installation of a Three P/V Vent Valve Parallel Manifold with Healy Clean Air Separator

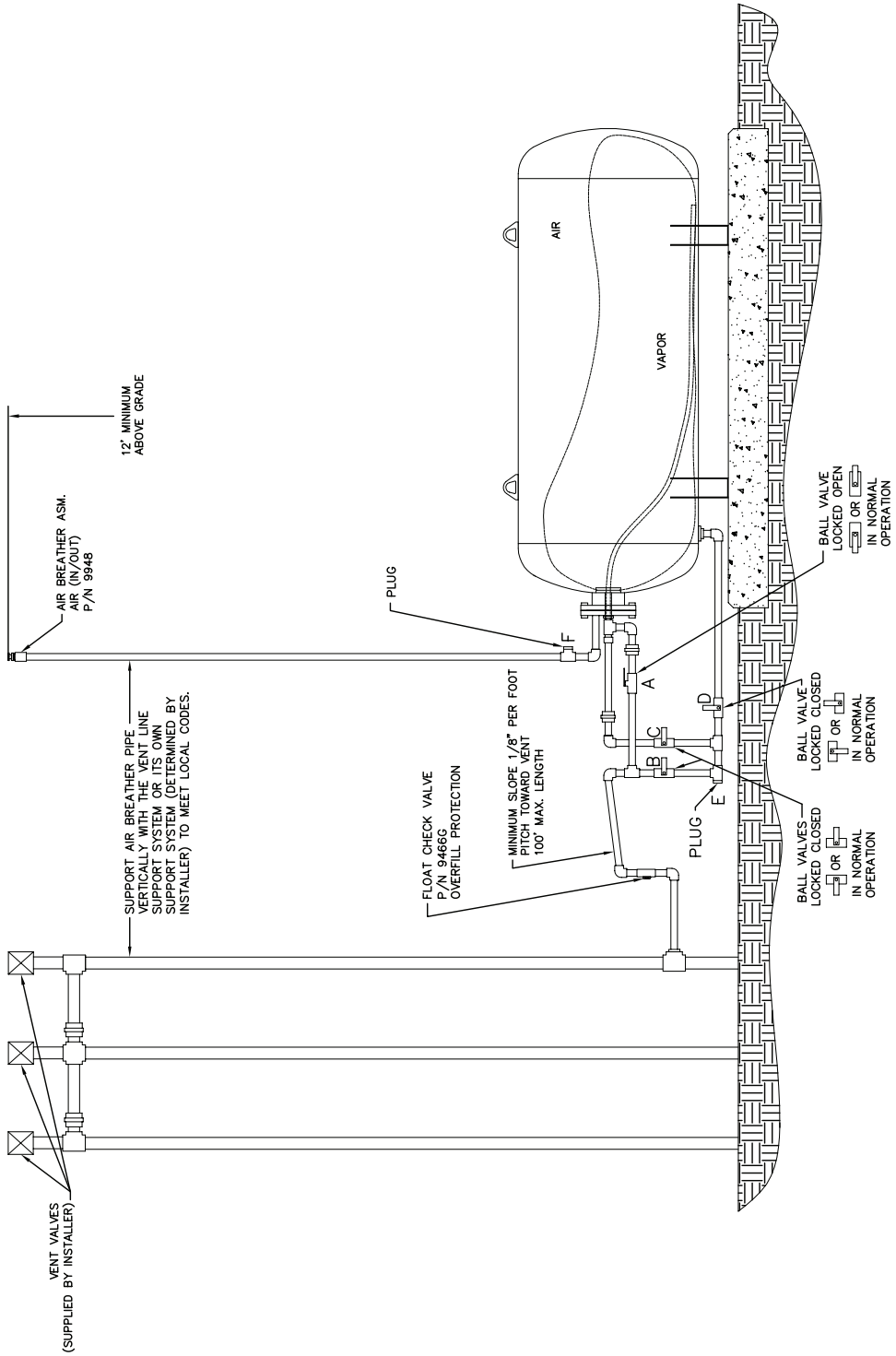

Executive Order VR-201-N
Healy Phase II EVR System
Not Including ISD

Exhibit 2
Figure 2B-6
Typical Configuration of a P/V Vent Valve Mounted on a Single 3” Vent Line with the Clean Air Separator

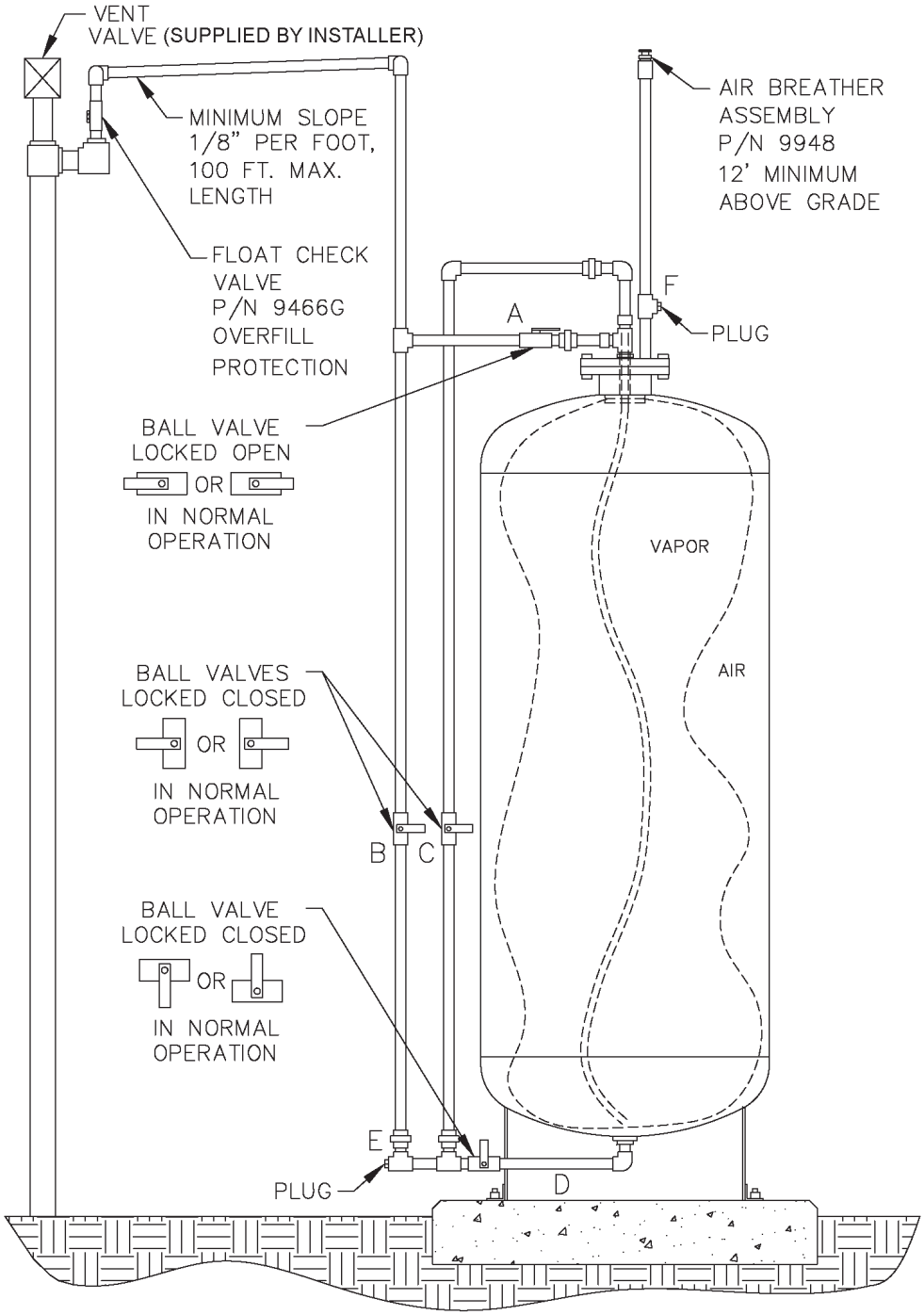

Executive Order VR-201-N
Healy Phase II EVR System
Not Including ISD

Exhibit 2
Figure 2B-6H
Typical Configuration of a P/V Vent Valve Mounted on a Single 3" Vent Line with the Clean Air Separator

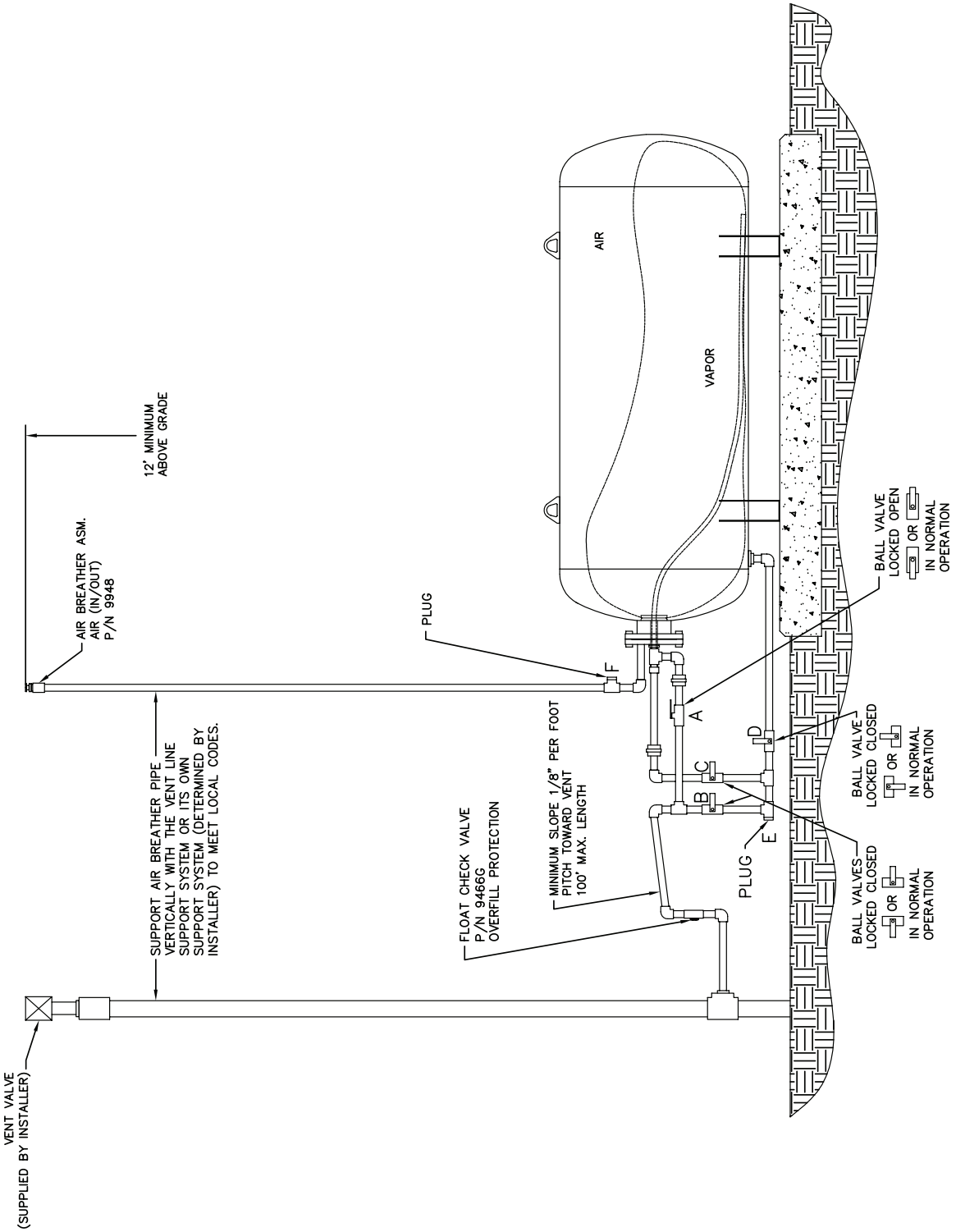

Executive Order VR-201-N
Healy Phase II EVR System
Not Including ISD

Exhibit 2
Figure 2B-7
Example of a GDF Maintenance Record

Date of Maintenance/ Test/Inspection/Failure/y (including date and time of maintenance call)	Repair Date To Correct Test Failure	Maintenance/Test/Inspection Performed and Outcome	Affiliation	Name and Technician ID number of Individual Conducting Maintenance or Test	Telephone Number