Executive Order VR-201-O
Healy Phase II EVR System
Not Including ISD

Exhibit 1
EQUIPMENT LIST

Part 1 - Healy Equipment List

Component	Manufacturer/Model
Nozzle	Healy Model 900[1] (Figures 1-1 and 1-2)
Clean Air Separator	Healy Model 9961 Clean Air Separator (Figures 1-3 and 1-4) Healy Model 9961H Clean Air Separator (Figures 1-3H and 1-4H)
Inverted Coaxial Hoses	Healy Model 75 Series (3/4" I.D.) (Figures 1-5a, 1-6 and 1-7) 75W-XXX-YZYZ Where: W represents color of hose (varies) Note: Product label will have an "X" in this position for all hose colors XXX represents hose length First two digits for length in feet Last digit - length in tenths of foot Note: Product label will have "XXX" in this position for hose length Y represents hose end type S = Swivel End F = Fixed End Z represents thread type 2 = Healy Straight Thread 3 = Metric Thread 4 = Balance-Type Thread

[1] Nozzle can have either a two position or three position hold open clip (see Figure 1-1).

Component	Manufacturer / Model
	Goodyear Futura HVR Series (3/4" I.D) (Figure 1-5b) 532-33W-X24-0YYZZ where: W = specifies hose color (varies) X = specifies fitting combination 2 = S2S2 3 = S3F2 4 = S4F2 5 = F2F2 6 = F3F2 7 = S2F2 Y = specifies hose length in feet Z = specifies hose length in tenths of feet
Dispenser Conversion Adaptors (Optional)[2]	Healy Model CX6-A (Required on Gasboy, Global Century, Reliance and Select Dispensers) Healy Model CX6-VV1A* Healy Model CX6-VV2A* Healy Model CX6-VV3A EBW Model 303-301-01 (Figures 1-8 and 1-9) Note: Items marked with asterisk (*) are no longer manufactured, but may be used for dispenser retrofit.
Reconnectable Breakaway Coupling	Healy Model 8701VV (Figures 1-10 and 1-11) Healy Model 807 Swivel (Figures 1-12 and 1-13)
Flow Limiter[3]	Healy Model 1301 (Figures 1-14 and 1-15) Healy Model 1302 (Figures 1-16 and 1-17)

[2] If optional components are installed or required by regulations of other agencies, the components and model numbers manufactured by Franklin Fueling Systems may be used to facilitate installation. The use of dispenser conversion adaptors not listed above may be used to facilitate installation provided that all applicable performance standards are met.

[3] Flow limiter is mandatory when the flow rate is greater than 10.0 gallons per minute to comply with US EPA requirement. 1301 is used with 8701VV breakaway. 1302 is used with 807 swivel breakaway.

Component	Manufacturer / Model
Dispenser Vacuum Pump	
	Healy Model VP1000 Vacuum Pump Healy/Franklin Electric Model VP1000 Vacuum Pump (Figure 1-18)
Dispensers	
	Note: Unihose dispensers shall be required unless as provided by Section 4.10 of CP-201.

Gilbarco Encore Series[4]

Healy Kit VP1000R[5] or VP1000S[6]

Model #'s	Description:
NAO	Encore 1 Grade Multi-hose
NA1	Encore 2 Grade Multi-hose
NA2	Encore 3 Grade Multi-hose
NA3	Encore 4 Grade Multi-hose
NG0	Encore 3 Grade Single-Hose
NG1	Encore 4 Grade Single-Hose plus 1
NG4	Encore 2 Grade Single-Hose
NJ0	Multi-hose Blender
NJ2	Multi-hose Blender plus 1
NL0 NL1 NL2 NL3	Encore X+1 Blender
NN0 NN1 NN2 NN3	Encore X+0 Blender

GasBoy 9800 Series (Gilbarco)

Healy Kit VP1000M[7]

Model #'s	Description:
9852 – Suffix1 Suffix2	
9853 – Suffix1 Suffix2	

Where:

Suffix1 can be:

A	=	Factory fabrication and assembly modifications to chassis
HC	=	High capacity model
M	=	Manifold supply inlet at the pumping unit inlet
TW1	=	Manifold supply inlet
TW2	=	Two individual supply inlets

[4] Encore Dispensers factory equipped with Healy VP1000 will now have an angled (~13°) outlet casting.
[5] Kit used to install Healy components in Encore Balance series dispenser. VP1000R previously sold as equivalent to VP1000L.
[6] Kit used to install Healy components in Encore Assist series dispenser. VP1000S previously sold as equivalent to VP1000K.
[7] Kit used to install Healy components in GasBoy 9800 series dispenser

Component	Manufacturer / Model

X = Dispenser supplied by a submersible pump
Q = Utilizes an alternate meter and Pump

Suffix2 can be:

B = Battery back-up for electronics
C = Pump Interface
D = DC conduit and junction box
F = Fuel filter
G = Imperial gallons registration
H = High hose retriever
I = Internal hose retriever
L = Lighted panel
N = Equipped to handle a long spout nozzle
P = Satellite dispenser as part of the unit (for connection to a master pump)
PP = Solenoid valves (optional only on pumps)
R = Liters registration
S = Piping for connection to satellite
SS = Stainless steel panels
SSA = Equipped with stainless steel doors
SSTS = Stainless steel tops and doors
T = Mechanical totalizer
U = Submersible drive relays
W = Heater
Y = Vapor recovery ready
Z = Front Load Nozzle
2 = 230 VAC/60hz operation
3 = 230 VAC/60hz operation with 380VAC/60hz motor (available on all models except 9852Q)
25 = 230VAC/50hz operation
35 = 230VAC/50hz operation with 380VAC/50hz motor
4 = RS-485 interface
5 = 50hz operation
7 = Electronic totalizer activator on both sides
9 = Provided with 900-R Series TopKat

Component	Manufacturer / Model

Wayne Harmony Series

Healy Kit VP1000N[8] or VP1000Q[9]

Model #'s — Description:

prefix/VXXXYZ/suffix

Where:

- prefix = Any number or letter (with a possible "H" for Harmony)
- V = Vista
- X = Any digit
- Y = D or P
  - D = remote dispenser type for delivering fuel
  - P = suction pump for delivering fuel
- Z = 1, 3, 4, 5, 6, 7 or 8
- suffix = D1 or D2, and any combination of number(s) or letter(s)

Wayne Ovation Series

Healy Kit VP1000P[10]

Model #'s — Description:

XYZ/ABC

Where:

- X = B or R
  - B = Blended Dispenser
  - R = Regular Dispenser
- Y = Number of hoses per side
  - 1 = one hose per side
  - 2 = two hoses per side
- Z = Number of inlets per side
  - 1 = one inlet
  - 2 = two inlets
  - 3 = three inlets
- A = Number of grades
  - 1 = one grade
  - 2 = two grades
  - 3 = three grades
  - 4 = four grades
  - 5 = five grades

[8] Kit used to install Healy components to Harmony Balance series dispenser

[9] Kit used to install Healy components to Harmony Assist series dispenser

[10] Kit used to install Healy components to Ovation Balance or Assist series dispenser. VP1000P previously sold as equivalent to VP1000C.

Component **Manufacturer / Model**

B = Number of sides
1 = one side
2 = two sides
C = Number of columns
1 = one column
2 = two columns

Wayne Vista Series

Healy Kit VP1000T[11] & VP1000V[12]

Model #'s Description:
prefix/VXXXYZ/suffix
Where:
Prefix = Any number or letter
V = Vista
X = Any digit
Y = D or P
D = remote dispenser type for delivering fuel
P = suction pump for delivering fuel
Z = 1, 3, 4, 5, 6, 7 or 8
Suffix = D1 or D2, and any combination of number(s) or letter(s)

Wayne Global Century & Select Series[13]

Model #'s Description
3/GABCDE/Suffix
Where:
A = Model Series
2 = Global Century
7 = Select
B = Cabinet Style
2 = Column Style
C = Flow Rate Capacity
0 = Standard Flow
4 = Twin I, Dual Filters
D = Number of Hoses & Orientation
1 = Single, Island-Oriented
2 = Twin I, Island-Oriented

[11] Kit used to install Healy components to 3V and 4V Vista series dispenser. VP1000T previously sold as equivalent to VP1000C.
[12] Kit used to install Healy components to 1V and 2V Vista series dispenser. VP1000V previously sold as equivalent to VP1000F.
[13] Dispenser configuration only available for purchase from Dresser Wayne. There is no Kit for retrofit of these dispenser types.

Component	Manufacturer / Model

3 = Twin II, Island-Oriented
7 = Twin I, Lane-Oriented OR Single Side, Lane-Oriented w/ "R" Suffix
8 = Twin II, Lane-Oriented

E = Dispenser Type
D = Dispenser-Remote

Suffix = Any combination of letters or numbers

Wayne Reliance Series[14]

Model #'s /GABCDE/Suffix		Description
Where:		
A	=	Model Series 5 = Reliance Mechanical Fleet – Pricing 6 = Reliance Mechanical Fleet – Volume Only
B	=	Cabinet Style 2 = Column Style
C	=	Flow Rate Capacity 0 = Standard Flow
D	=	Number of Hoses & Orientation 1 = Single, Island-Oriented 2 = Twin I, Island-Oriented 3 = Twin II, Island-Oriented
E	=	Dispenser Type D = Dispenser-Remote
Suffix	=	Any combination of letters or numbers

[14] Dispenser configuration only available for purchase from Dresser Wayne. There is no Kit for retrofit of this dispenser type.

Component	Manufacturer / Model
	FFS/Healy Universal Retrofit Manual[15]
Healy Kits	VP1000A[16] VP1000D[17] VP1000G[18] VP1000H[19] VP1000J[20] Z071V[21] Z070E[22] Z008[23] Z009[24]

Table 1
Components Exempt from Identification Requirements

Component Name	Manufacturer	Model Number
Dispenser Kit	Healy	VP1000A & VP1000B VP1000D VP1000G VP1000H VP1000J VP1000M VP1000N VP1000P VP1000Q VP1000R VP1000S VP1000T VP1000V Z008 Z009 Z070E Z071V

[15] Any dispenser not currently listed in Exhibit 1 can be upgraded to Healy EVR using one of the kits listed in this section.
[16] Kit contains Universal Wire Harness for use in any dispenser make or model. For use with any VAC or VDC solenoid valves. VP1000A previously sold as equivalent to VP1000B.
[17] Early Gilbarco Encore 300 Blender Dispensers – 120 VAC valves (mfg. before 04/2003).
[18] Wayne DL Non-Blender Dispensers – 120 VAC valves.
[19] Tokheim Premier C Blender Dispensers – 24 VDC valves.
[20] Early Tokheim Blender Dispensers – Combination 120 VAC & 24 VDC valves.
[21] Universal Vapor Kit.
[22] Universal Electrical Kit.
[23] Standard Low Profile Single Hose Dispenser Retrofit Kit.
[24] Standard Low Profile Dual Hose Dispenser Retrofit Kit.

Figure 1-1
Healy Model 900 EVR Nozzle

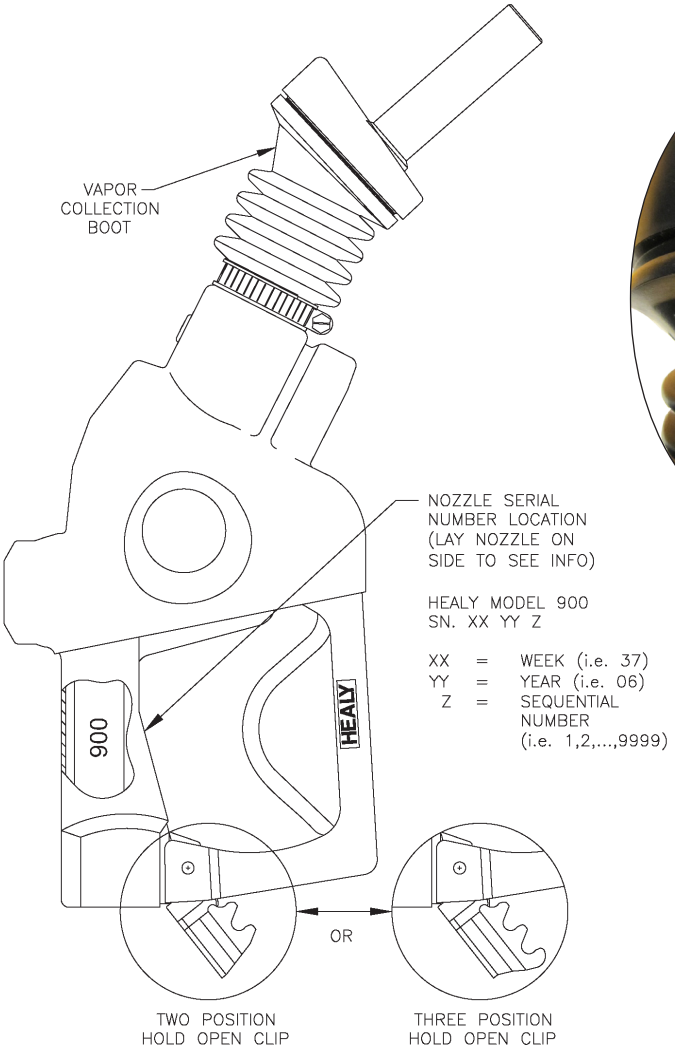

Figure 1-2
Healy Model 900 EVR Nozzle

Figure 1-3
Healy Model 9961 Clean Air Separator

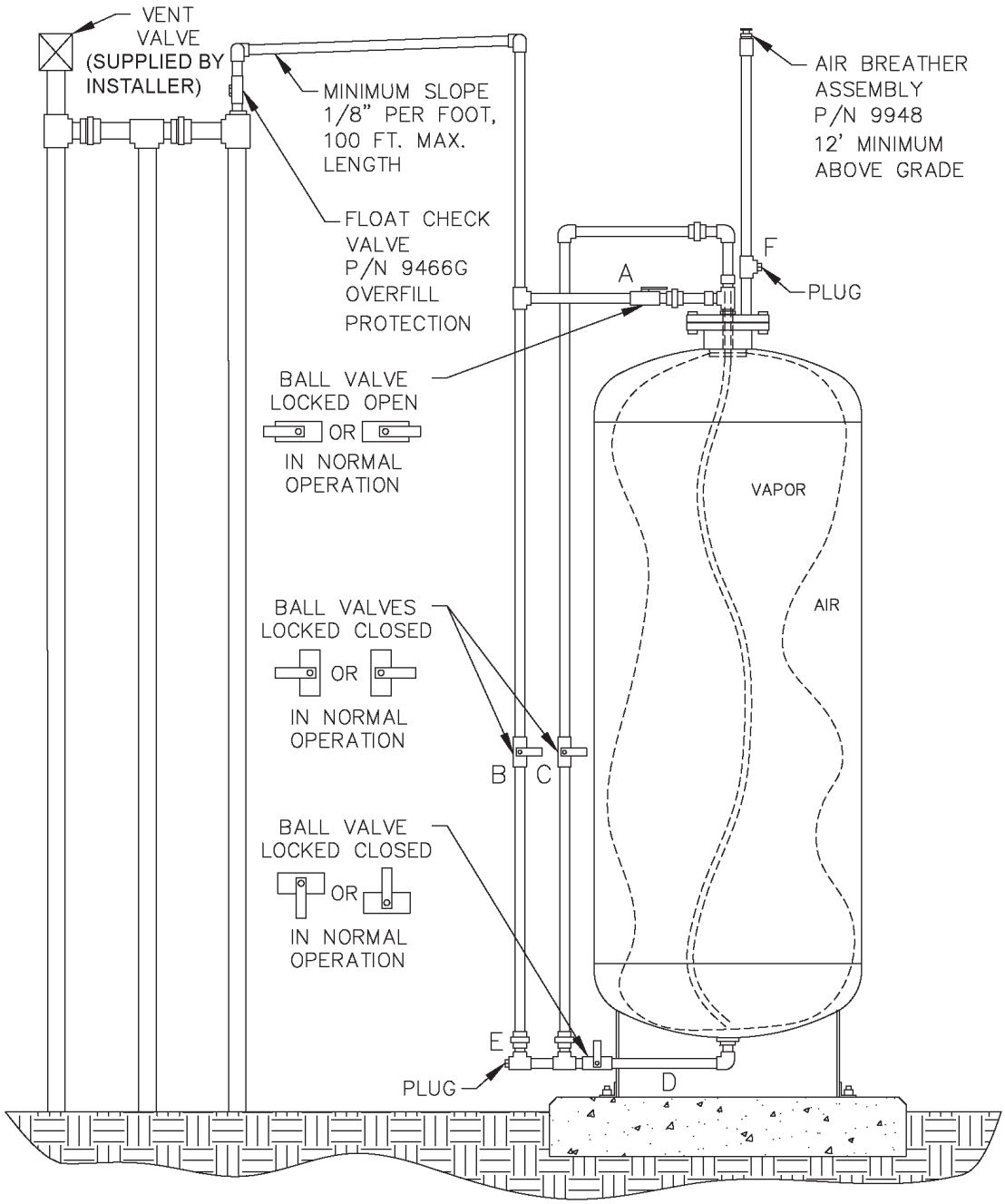

Figure 1-3H
Healy Model 9961H Clean Air Separator

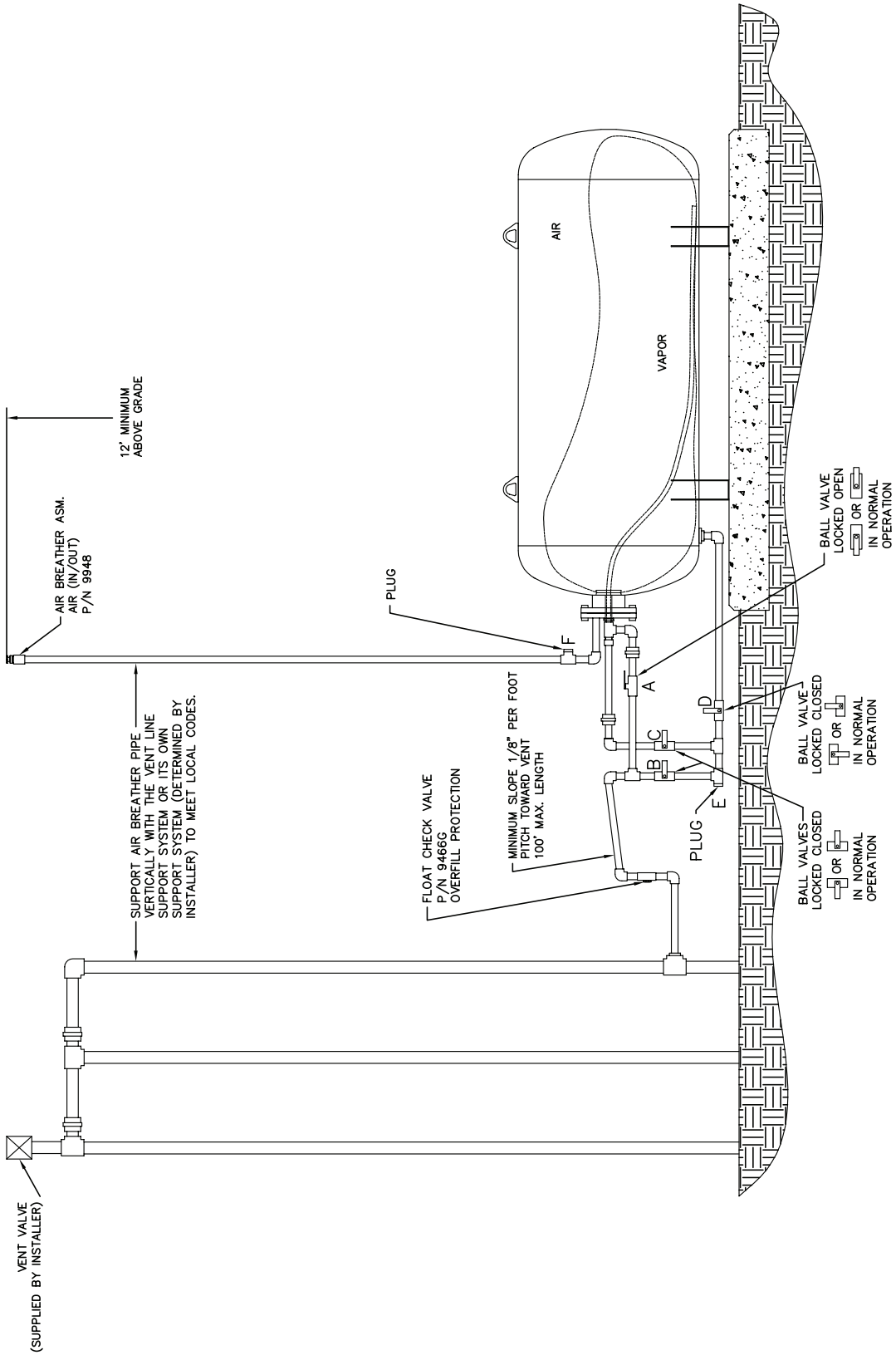

Figure 1-4
Healy Model 9961 Clean Air Separator

Figure 1-4H
Healy Model 9961-H Clean Air Separator

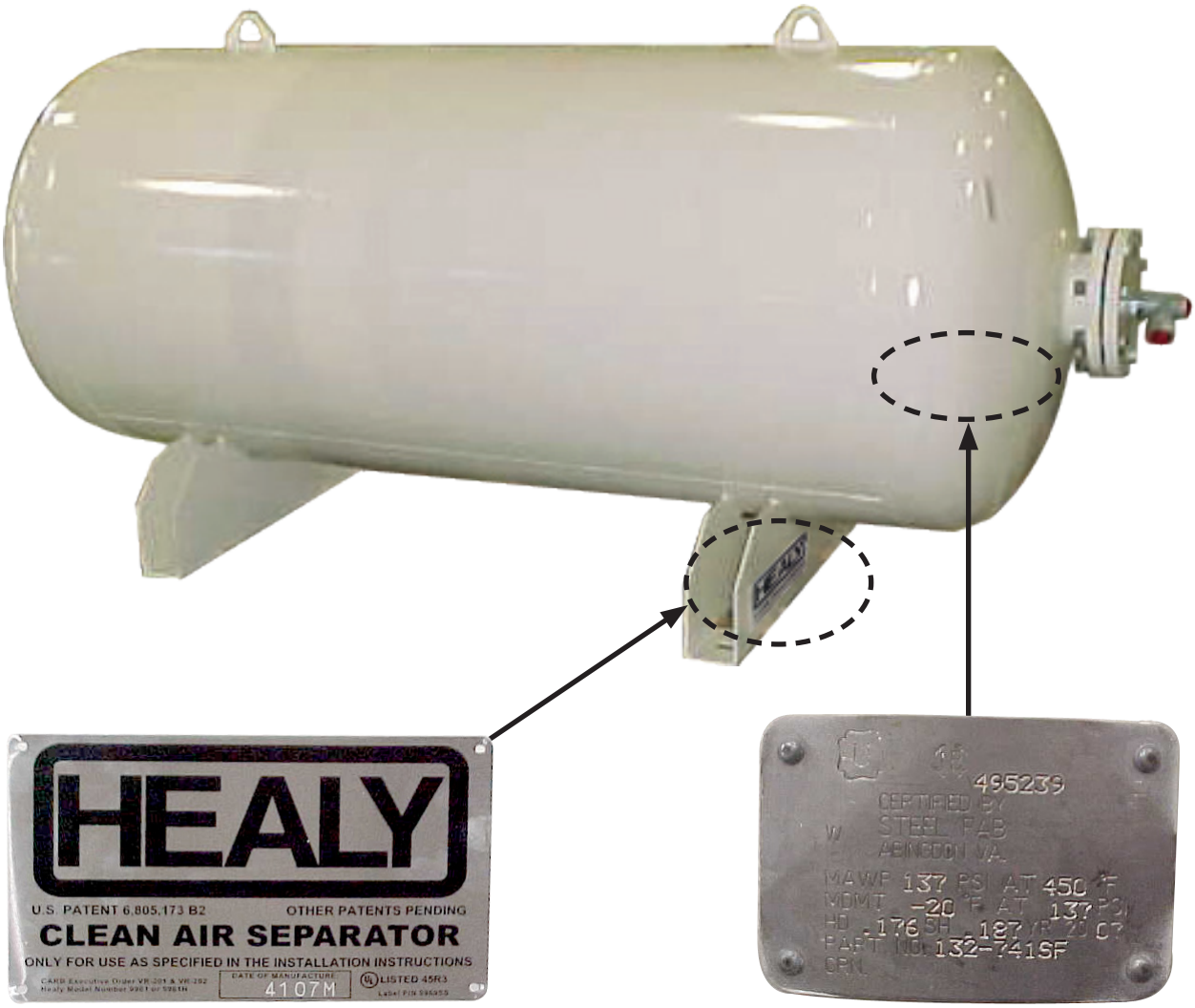

Clean Air Separator Name Plate

Clean Air Separator Data Plate
(not pictured on far side of base)

Figure 1-5a
Healy Model 75 Series Hose

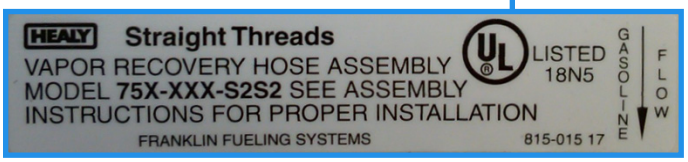

NOTE:
Typical Label for Healy Hose

Figure 1-5b
Goodyear Futura HVR Series Hose

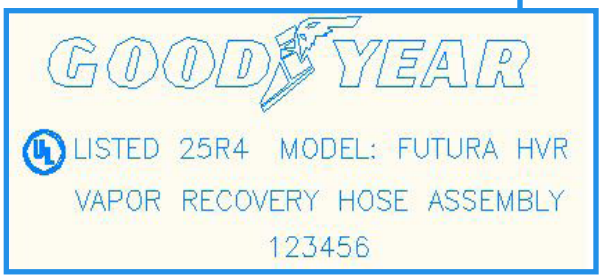

NOTE:
6 digit serial number shown for demonstration only – actual serial number will be different

Figure 1-6
Hanging Hardware Selection Options
Model 8701VV Breakaway and 1301 Flow Limiter

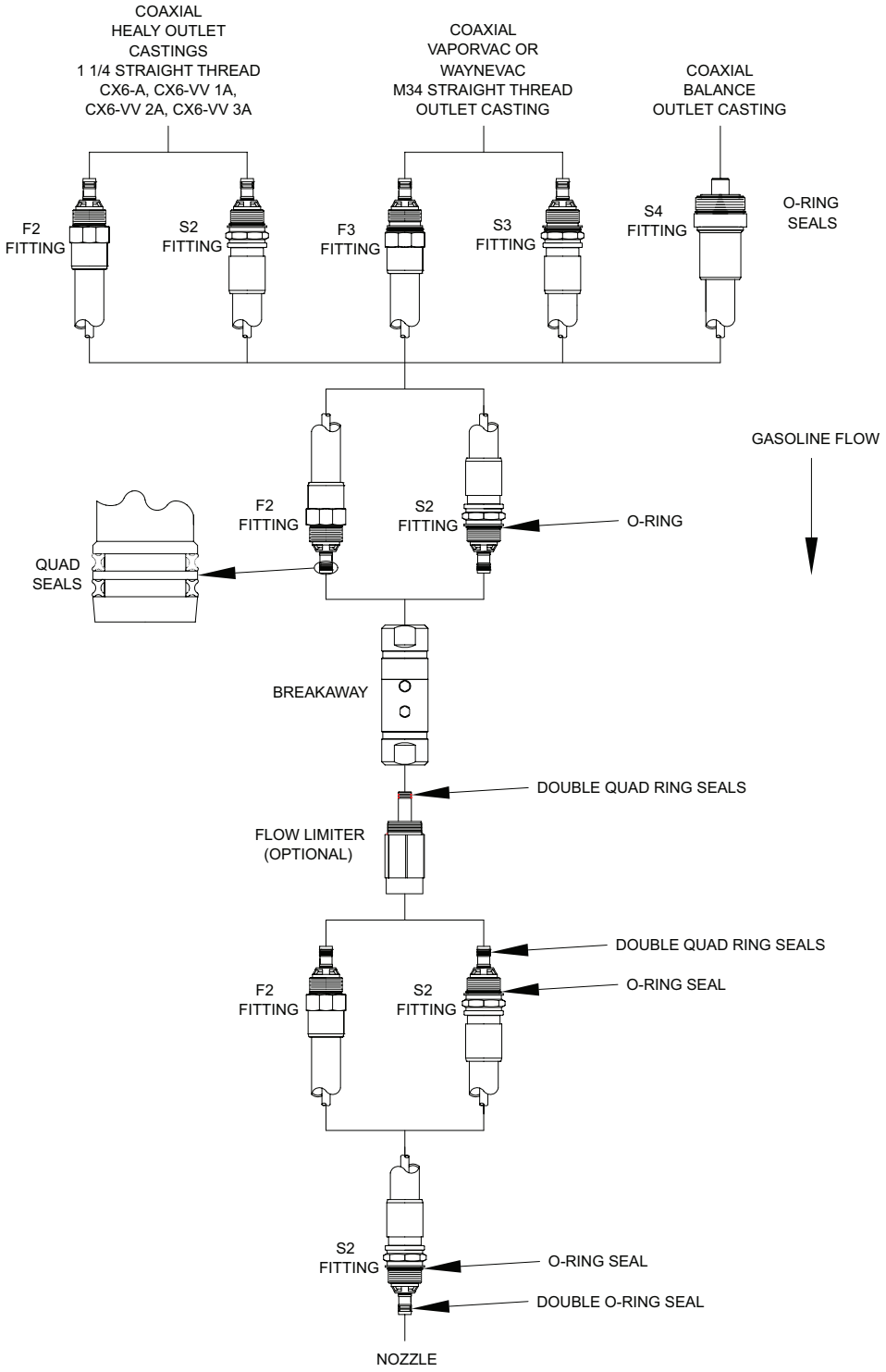

Figure 1-7
Hanging Hardware Selection Options
Model 807 Swivel Breakaway and 1302 Flow Limiter

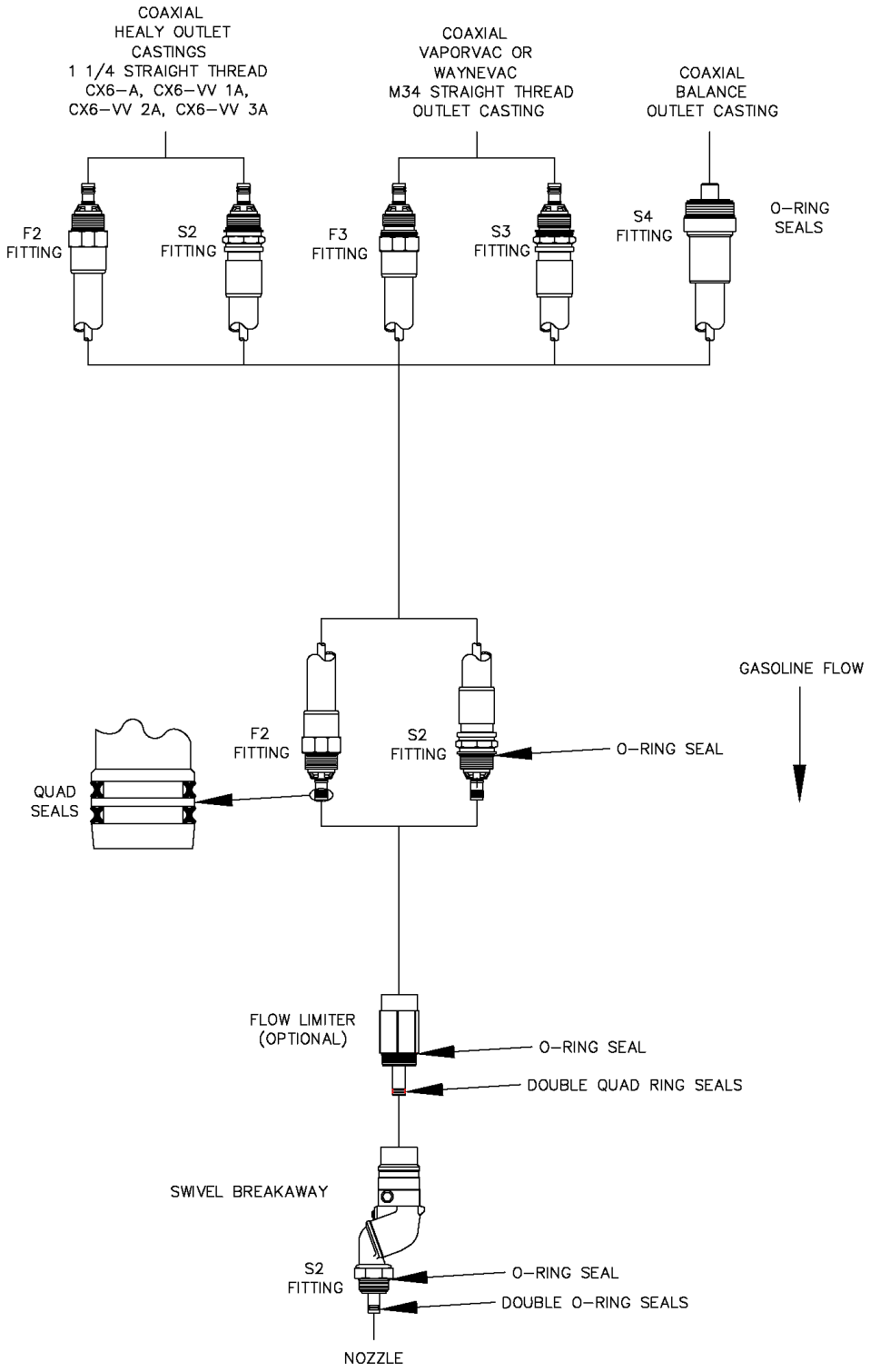

Dispenser Conversion Adaptors

Figure 1-8
Healy Model CX6-A

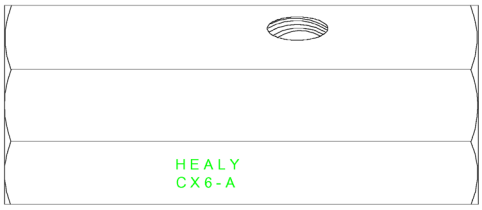

Figure 1-8
Healy Model CX6-A

Figure 1-8
Healy Model CX6-VV1A

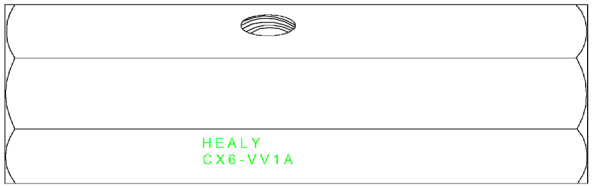

Figure 1-8
Healy Model CX6-VV2A

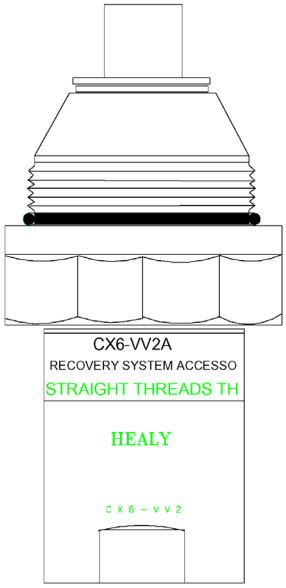

Dispenser Conversion Adaptors

Figure 1-9
Healy Model CX6-VV3A

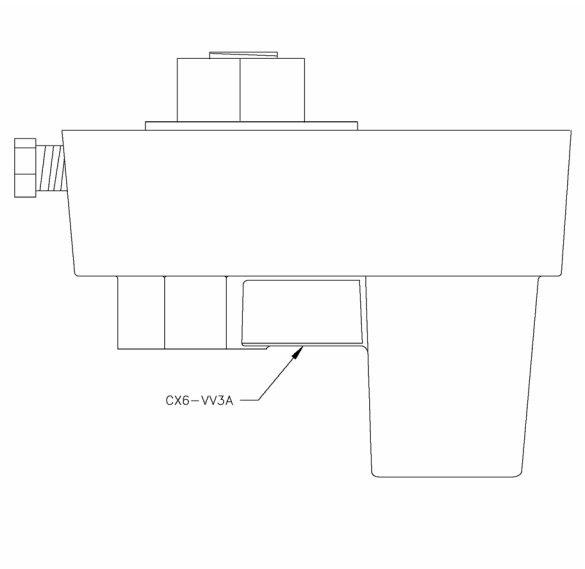

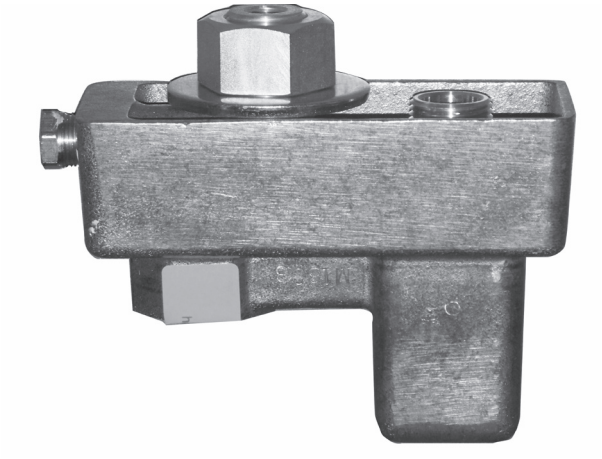

Figure 1-9
EBW Model 303-301-01

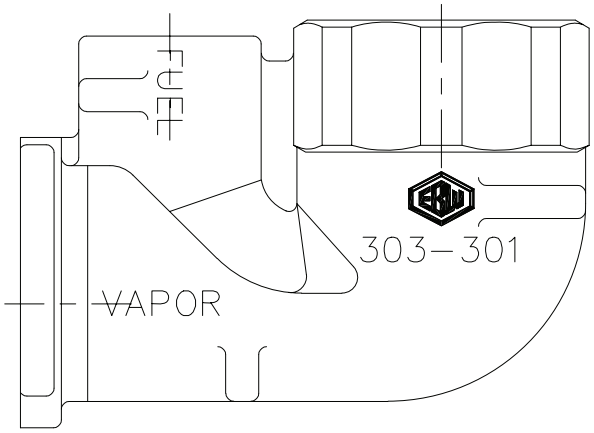

Healy Model 8701VV Breakaway

Figure 1-10

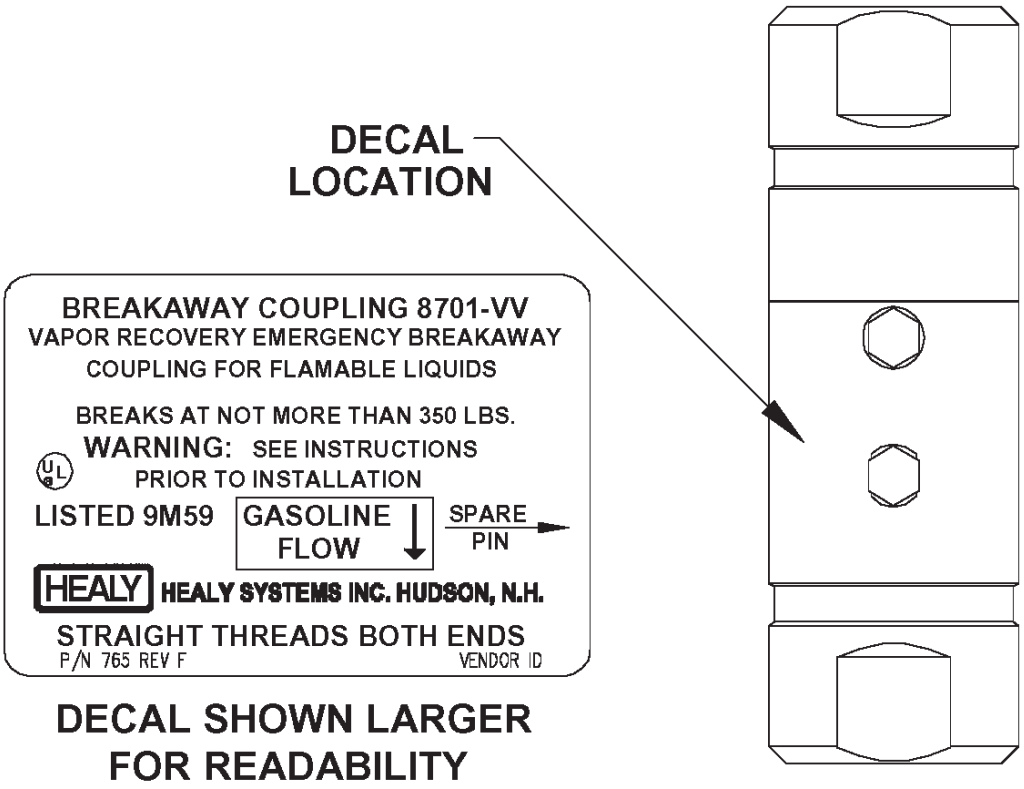

Figure 1-11

Healy Model 807 Swivel Breakaway

Figure 1-12 **Figure 1-13**

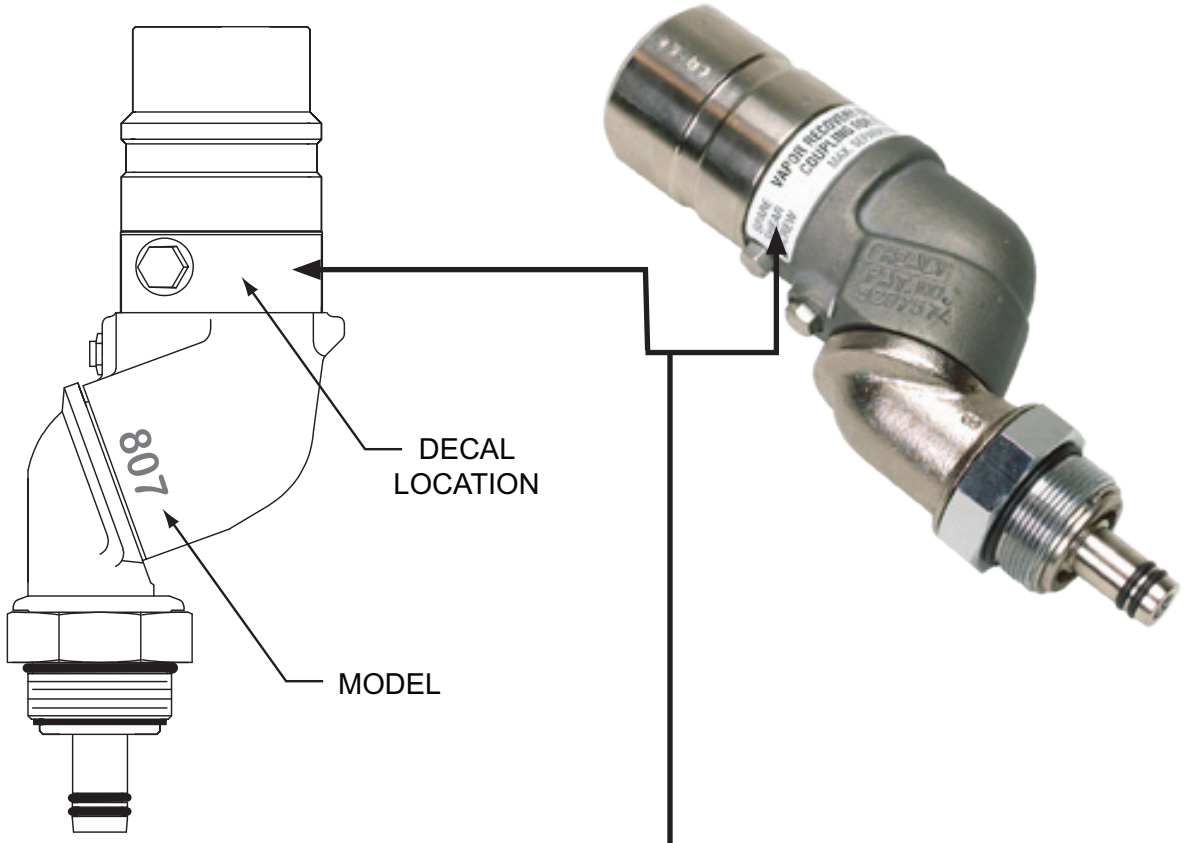

FLOW ▼ STRAIGHT THDS. BOTH ENDS
VAPOR RECOVERY EMERGENCY BREAKAWAY
COUPLING FOR FLAMMABLE LIQUIDS
MAX. SEPARATION FORCE 350#
FRANKLIN FUELING SYSTEMS MADISON WI
UL LISTED 9M59
MODEL 807
SPARE SHEAR SCREW ▼
LBL P/N 893

FLOW ▼ STRAIGHT THDS. BOTH ENDS
VAPOR RECOVERY EMERGENCY BREAKAWAY
COUPLING FOR FLAMMABLE LIQUIDS
MAX. SEPARATION FORCE 350#
UL LISTED 9M59
Healy Systems Inc. Hudson, N.H. 03051
MODEL 807
SPARE SHEAR SCREW ▼
LBL P/N 893

DECALS SHOWN LARGER FOR READABILITY

EITHER LABEL MAY APPLY

Figure 1-14
Healy Model 1301 Flow Limiter

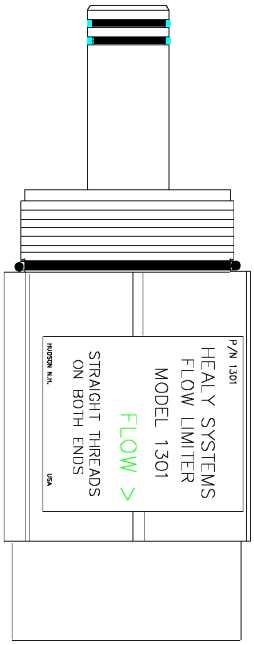

Figure 1-15
Healy Model 1301 Flow Limiter

Figure 1-16
Healy Model 1302 Flow Limiter

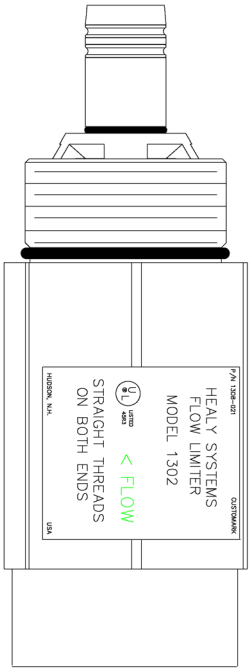

Figure 1-17
Healy Model 1302 Flow Limiter

Figure 1-18
Healy Model VP1000 Vacuum Pump

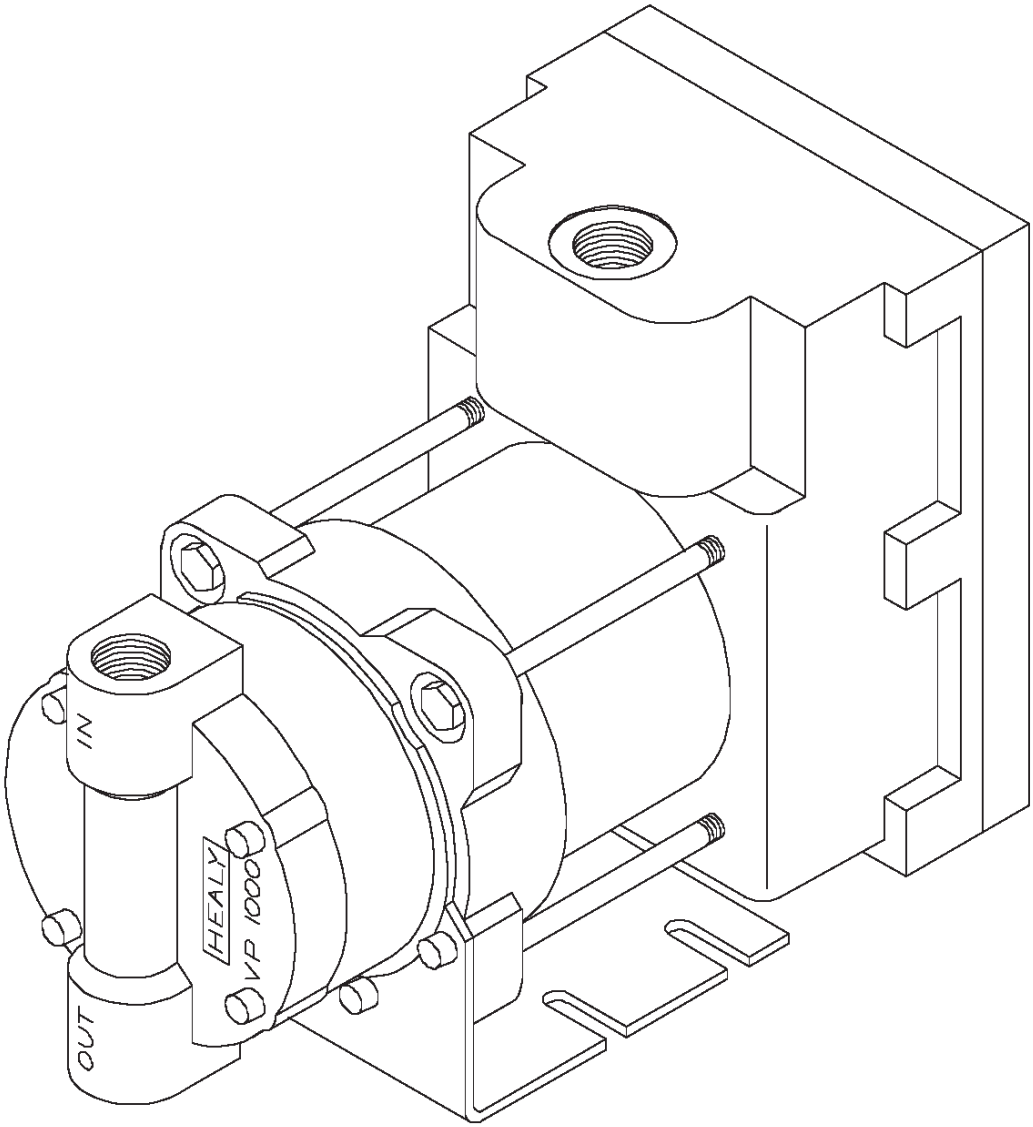

Part 2 - Vapor Equipment List for Liquid Condensate Trap

Component	Manufacturer/Model
Riser Adapter	INCON model TSP-K2A (Figure 1-LCT-1)
In-Line Filter	140 micron, Swagelok B-4F2-140 or SS-4F2-140, or equivalent
Screen	Aluminum Insect screen (18X14 mesh), or Stainless Steel Insect screen (18X18 mesh).
Stainless Steel Hose Clamp	Sized to secure screen to suction tube.
Liquid Sensor [1]	Must have an audible and visual alarm
Liquid Condensate Trap[1]	Any capacity, manufacturer, make and model

[1] Must meet applicable State Water Resources Control Board requirements (*e.g.* LG-113, LG-167 and LG-169) and any local authority having jurisdiction which includes the Certified Unified Program Agency (CUPA).

Figure 1A-LCT-1
Typical Liquid Condensate Trap Installed Below the Transition Sump

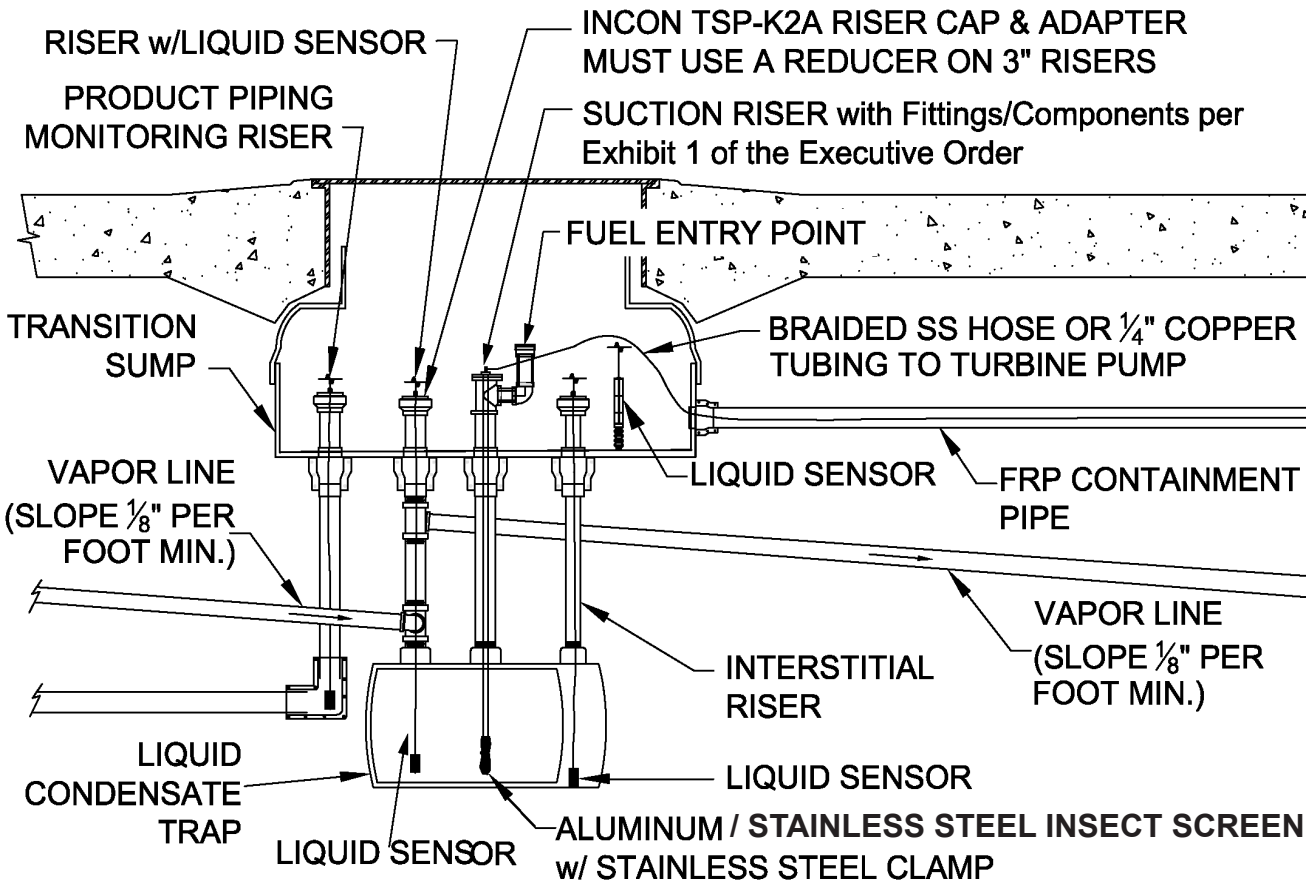

Figure 1A-LCT-2
Typical Liquid Condensate Trap Installed Inside the Transition Sump
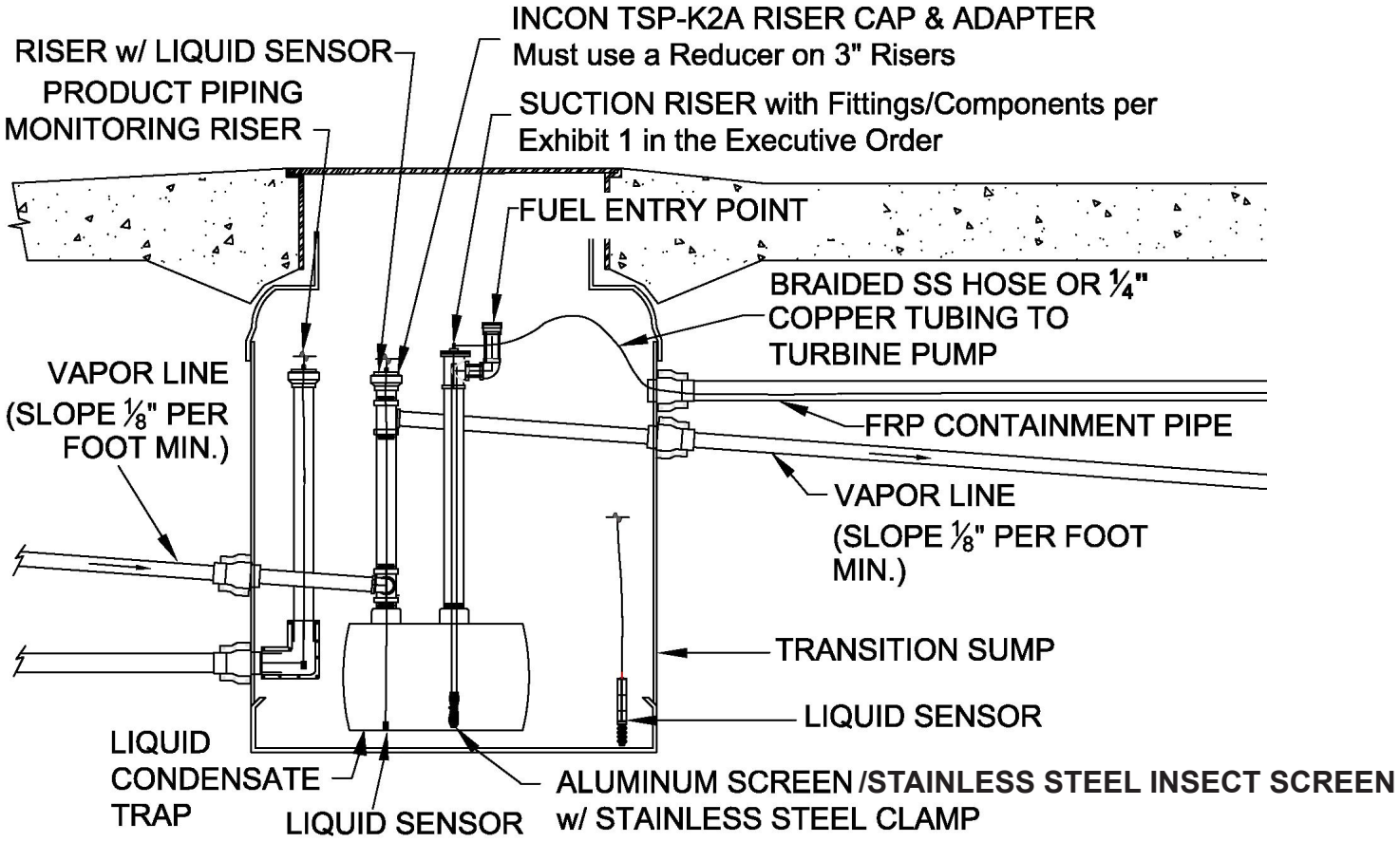
Note: A Liquid Condensate Trap installed inside a liquid AND vapor tight transition sump that is monitored with a liquid sensor can be single walled (if installed before July 1, 2004).