WAYNE-DRESSER HARMONY™ SERIES DISPENSER RETROFIT for HEALY SYSTEMS, INC.

MODEL VP1000

VAPOR RECOVERY ASSIST SYSTEM

(KIT Z080)

OUTLINE

NOTICE: USE THIS PROCEDURE IF CONVERTING A WAYNE-VAC™ VAPOR RECOVERY ASSIST SYSTEM TO A HEALY VAPOR RECOVERY ASSIST SYSTEM

This Manual is to be used for new, replaced, retrofitted, or reconditioned dispensers/pumps.

See Healy Systems Kit Z078 For Dispensers With Balance Systems

1. **Purpose**
2. **Safety**
3. **Models Covered**
4. **Parts Lists**
5. **Tools Required**
6. **Dispenser Access**
7. **Survey Scope Of Work**
8. **Wayne-VAC Removal**
9. **Installing The Healy VP1000 System**
10. **Connecting Vapor Lines**
11. **Installing The Sealed Nipple Assembly**
12. **Wiring Inside The Electronics Compartment**
13. **Connecting Healy Systems Dispensing Equipment**
14. **VP1000 Theory Of Operation**
15. **Testing The System**
16. **Trouble Shooting The VP1000**
17. **VP1000 Vane & Rotor Service & Replacement Guide**

Start-up / New Installation / Warranty / Annual Testing Form

1. PURPOSE:

This procedure describes the tools, methods and skill levels required to install a Healy Systems, Inc. Model VP1000 Vapor Recovery pump in vapor ready Wayne Dresser Harmony™ series gasoline dispensers. Only Healy trained and certified contractors will be able to perform these retrofits or warranty will be void. The installer shall be a skilled petroleum technician and thoroughly familiar with the requirements of State, Federal and local codes for installation and repair of gasoline dispensing equipment. Also, they shall be aware of all the necessary safety precautions and site safety requirements to assure a safe and trouble free installation. NOTE: All electrical and hydraulic plumbing fittings referred to in these instructions must be UL "listed" or "recognized" for the purpose.

Note: Installations of vapor piping into the inlet side of the vacuum pump should be sloped such that the natural flow direction is toward the vacuum pump. However, it is permissible to have a piping slope tilted away from the vacuum pump provided that all other applicable tests (Dispenser integrity and V/L) meet the specifications outlined in the appropriate section of the Executive Order and ***ARB Approved Installation, Operation and Maintenance Manual***.

Note: For installations with In-Station Diagnostics (ISD), the vapor flow meter shall be installed on the down stream side of the vacuum pump. Every effort shall be made to install the vapor flow meter so that vapor piping between the vacuum pump and the vapor flow meter is sloped such that the natural flow direction is toward the vapor flow meter. However, it is permissible to have the piping slope away from the vapor flow meter provided that all other applicable tests (Dispenser integrity, V/L and ISD Operability) meet the specifications outlined in the appropriate section of the Executive Order and ***ARB Approved Installation, Operation and Maintenance Manual***.

2. SAFETY:

Before installing the equipment, read, understand and follow:

- The National Electrical Code (NFPA 70)
- The Automotive and Marine Service Code (NFPA 30A)
- Any national, state and local codes that may apply.

The failure to install the equipment in accordance with NFPA 30A and 70 may adversely affect the safe use and operation of the system.

Accurate, sound installations reduce service calls: Use experienced, licensed contractors that practice accurate, safe installation techniques. Careful installation provides a sound troubleshooting framework for field repairs and can eliminate potential problems.

1. Read all instructions before beginning.
2. Follow all safety precautions:
   - Barricade the area.
   - Do not allow vehicles or unauthorized people in the area.
   - Do not smoke or allow open flames in the area.
   - Do not use power tools in the work area.
   - Wear eye protection during installation.

3. Use circuit breakers for multiple disconnects to turn off power and prevent feedback from other dispensers.

3. MODELS COVERED:

Wayne-Dresser Harmony™ series dispensers, all options except suffix “O”, non vapor ready and Balance systems. The addition of the Healy Systems VP1000 to the Harmony dispenser will increase the current draw of the dispenser by 2 amps. Use the label supplied to note this change.

4. PARTS LISTS: (See Photo A)

1 VP1000 Vacuum Pump

1 1365A Wire Harness / MC100 Series Interface Module Assembly

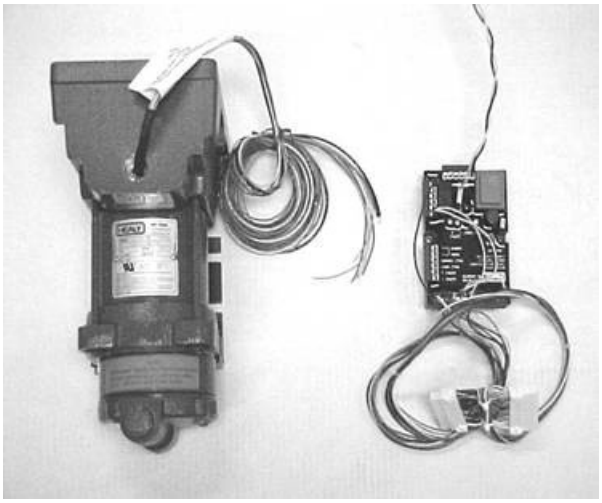

Photo A

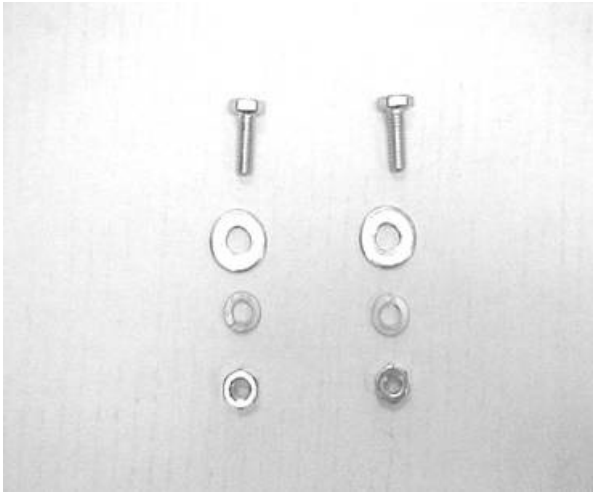

Photo B

Photo C

Photo D

HARDWARE KIT Z080H: (See Photo B)

2 1/4-20 bolts, washers, lock washers and nuts

ELECTRICAL KIT Z080E: (See Photo C)

4	4” Tyraps
1	Current change label (p/n 1405)
7	Wire nuts
1	8-32 x 3/4” machine screw, washer & nut
1	1/2” male NPT x 3/4” female NPT electrical reducer fitting
1	#1346 potted conduit nipple
1	#8 Ring tong terminal
1	Notice label (p/n 1406)
1	UL Listed label (p/n 1410)

VAPOR KIT Z080V: (See Photo D)

2	3/8” NPT x 5/8” flare straight fittings
3	1/2” NPT x 5/8” flare elbow fittings
1	1/2” NPT x 5/8” flare straight fitting
3	3/4” NPT x 5/8” flare straight fittings
1	5/8” x 5/8” x 5/8” flare tee
12’	5/8” OD copper tube, type ‘L’
1	1/4” pipe plug
1	3/8” pipe plug
1	1/2” close nipple
1	1/2” x 1/4” x 1/2” reducing tee
1	1/2” ball valve
1	3/4” elbow
12	5/8” flare nuts

MATERIALS SUPPLIED BY INSTALLER:

- Thread Sealing Compound – non-Setting, UL Classified for use on all tapered thread, Non-electrical, plumbing fittings.
- Oil and gasoline compatible PTFE tape

5. TOOLS REQUIRED:

- 1/2” or 3/8” ratchet set w/ sockets 1/4” through 9/16” + 3” extension
- 9” lineman’s pliers
- Assorted open end wrenches 1/4” through 3/4”
- Wire cutters/strippers 18 AWG and 26 AWG
- 1-1/8” greenlee type sheet metal punch
- Mechanical hand drill (egg-beater type)
- Assorted drill bits 1/16” through 7/16”
- Assorted screwdrivers (flat blade-one must be 1/8” wide and Phillips)
- 5/8” copper tube bending tool
- 5/8” copper tube flaring tool
- Copper tubing cutter
- Electrical multi-Oeter
- Small hand brush (1-1/2” thick, for clearing chips)
- 12” adjustable wrench
- 10” pipe wrench
- Tape measure
- Allen wrenches
- #20 torx bit
- Whitney type hand sheet metal punch with 3/16” punch and die set

6. DISPENSER ACCESS:

- Secure Dispenser Access keys from Station Management.
- Lock-out and tag-out all electrical power to dispenser being modified.
- Remove the Top Cladding and Upper Shield in order to expose upper vapor tubing attached to the outlet castings.
- Remove both Upper Column Covers above nozzle holsters in order to expose Wayne-VAC™ vacuum pumps.
- Remove the Lower Column Cover below the nozzle holster on the “A” side of the dispenser. This is the side that the vapor tubes from the out port of the Wayne-VAC™ vacuum pumps are connected to a vapor tee mounted at the base of the dispenser, see photo F.
- Remove the Upper Cladding covering the “J” Box, see photo E.
- Remove the “J” Box cover.
- Remove the Door Cladding assembly and the Access Door assembly in order to expose the electronics compartment.

7. SURVEY– Scope of Work: ***Perform this step before beginning steps 8 thru 12.***

Read and familiarize yourself with the theory of operations sheet and wiring instructions for the VP1000 Vapor Pump. The installation of the pump is on the sheet metal shelf over the junction box, with the pump cover facing the "A" side of the dispenser, see photo E. This is the side that the vapor tubes from the out port of the Wayne-VAC™ vacuum pumps are connected to a vapor tee mounted at the base of the dispenser, see photo F. From this survey, you will have an indication of where the vapor plumbing fittings need to go and where the holes need to be drilled in the adjoining sheet metal to allow the vapor pipes from the pump to pass through to the hydraulics compartment. Notice also in the electrical junction box, on the bottom right side, there is a potted conduit nipple which contains the Wayne-VAC™ wiring harness (for pump on "A" side) that you will remove to install the Healy potted conduit nipple, See Section 11.

CAUTION: ALL POWER TO DISPENSER UNDER MODIFICATION SHOULD BE COMPLETELY DISCONNECTED AND CAPPED OFF AT JUNCTION BOX TO AVOID UNINTENTIONAL FEEDBACK FROM OTHER DISPENSERS!!

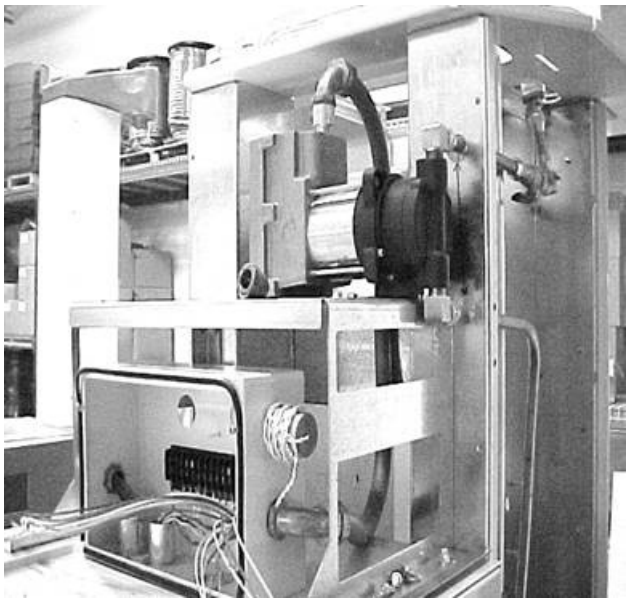

Photo E

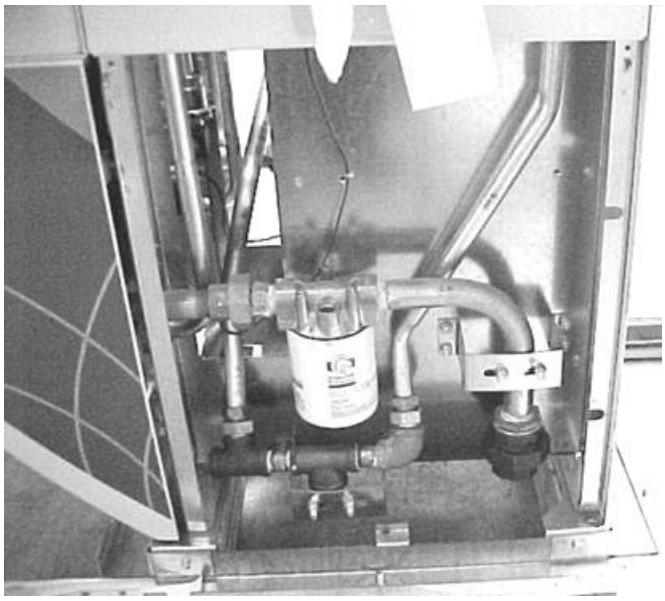

Photo F

8. WAYNE-VAC™ REMOVAL:

- Disconnect and lockout the power to the dispenser.
- Open the dispenser cabinet doors as specified in section 6 above.
- Close the vapor recovery (Stage II Vapor return line) impact valve. If there is no impact valve, be sure to have proper plugs or caps available to plug the Stage II line before disconnecting the Wayne-VAC™ equipment.
- Unscrew the flare nuts holding the vapor tube into the inlet of both VAC pumps, see photo G.
- Unscrew the flare nuts from the vapor port of both outlet castings and remove the vapor tubes, see photo H.
- Remove the 3/8" NPT x 3/8" flare elbow fittings from both outlet castings, see photo H.

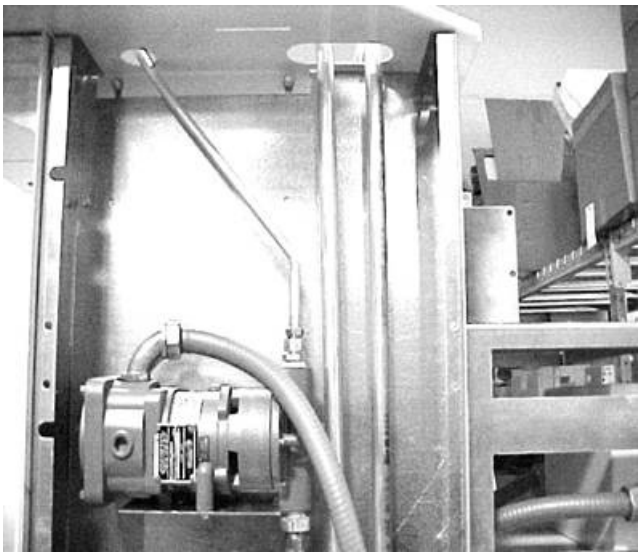

Photo G

Photo H

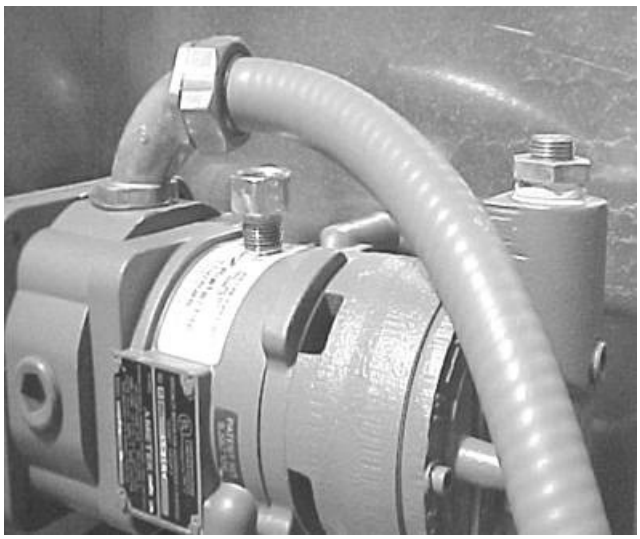

Photo I

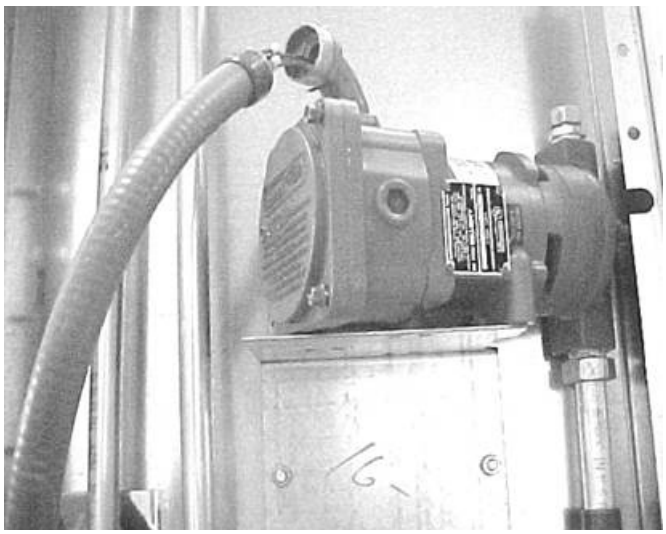

Photo J

- Remove the 3/8” NPT x 3/8” flare straight fitting from the inlet of the VAC pump on the “B” side and install the 3/8” pipe plug supplied in the Healy Vapor Kit, tighten securely, see photo I.
- On the “A” side VAC pump, back off the electrical nut from the elbow attached to the pump and the flare nut holding the vapor tube in the out port of the pump, see photo J.
- Remove the (3) sheet metal screws that hold the pump to the bracket.
- Remove the electronics cover, secured with (4) bolts, from the pump.
- Disconnect harness wires from the pump wires and pull through the elbow. Let the electrical tube hang for future use. Remove the elbow and set aside for future use.
- Lift the VAC pump off the outlet vapor tube and set aside.
- Remove the VAC pump mounting bracket.
- Unscrew the flare nut holding the outlet vapor tube in the bottom of the dispenser and remove the vapor tubing, see photo F, right side when facing the dispenser.

- Remove the 3/4” NPT flare fitting from the 3/4” elbow and install a 3/4” NPT x 5/8” flare straight fitting supplied in the Healy Vapor Kit, tighten securely.
- In the “J” box, bottom right, you will see the potted nipple containing the wire harness that was previously disconnected from the Wayne-VAC™ pump. Follow this harness from the bottom of the potted nipple (under the “J” box) to the Wayne-VAC™ electronics control board #887227; remove the (2) connectors from the board and also the green ground wire attached to the chassis.
- Remove the coupling (under the “J” box) from the potted nipple and wire harness that was just disconnected from the Wayne-VAC™ electronics control board #887227.
- Remove the potted nipple from the “J” box and pull the wire harness out of the flexible, non-Oetallic electrical tubing and elbow, set aside.
- IMPORTANT: In the “J” box, bottom left, you will see the potted nipple containing the wire harness that controls the Wayne-VAC™ pump on the “B” side of the dispenser. Follow this harness from the bottom of the potted nipple (under the “J” box) to the Wayne-VAC electronics control board #887227, remove the (2) connectors from the board and neatly bundle up out of the way.

WARNING

This retrofit kit requires drilling in a Hazardous Location. Insure that all power to the dispenser has been turned off. Open all access doors for increased airflow. Use only sharp drill bits; dull bits may generate excessive heat. Use air powered drill at low RPM’s. If an electric drill is used, a suitable UL Listed Gas Detector must be used to ensure the area is below 25% of the Lower Explosive Limit. Do not drill if gasoline odors are present.

If drilling in the electronics cabinet, carefully collect and remove all metal shavings that may be inside the cabinet. Failure to remove the shavings could result in an electrical shock hazard. Before drilling, check to ensure that no wires or fluid containing parts (i.e. product tubing) is located on the backside or near the chuck of the drill.

9. INSTALLING THE HEALY VP1000 SYSTEM

NOTICE: WHEN DRILLING HOLES, ASSURE THAT THERE ARE NO HAZARDOUS VAPORS PRESENT AND DO NOT ALLOW CHIPS TO FALL DOWN INTO THE HYDRAULICS AREA.

- In order to get the vapor tubing from the pump into the vapor plumbing area, it is necessary to drill or punch two 1-1/8” holes on the sheet metal column near the edge of the shelf, see photo E. Use a tape measure and mark the centerline of the holes to be 1-1/4” in from the front edge of the sheet metal column. Measure down from the top of the column 5-1/2” and mark on the 1-1/4” centerline, measure down an additional 6-3/4” and mark on the centerline. These marks are the centers of the holes for the vapor pipes going to the VP1000. DO NOT DRILL – verify positions in the next steps.

- Get the vapor pump and install a 1/2” NPT x 5/8” flare elbow fitting into the ‘IN’ and ‘OUT’ ports using tape, not pipe dope. Looking at the face of the pump, completely tighten both fittings so they are facing the right.
- Position the pump on top of the sheet metal shelf over the electrical junction box on top of the electronics cabinet, with the fittings pointing toward the hydraulics cabinet and overhanging the edge of the shelf about 1/4”.
- Slide the pump to fit against the hydraulics cabinet and position so as to allow for matching the location of holes that need to be drilled through the sheet metal.
- Satisfied that the fittings and hole marks line up, remove the pump and drill the two, 1-1/8” holes, marked above.
- Position the pump assembly on top of the sheet metal shelf and slide over so that the ports are accessible from the hydraulics area.

10. CONNECTING VAPOR LINES: (See Photos K, L, M & N)

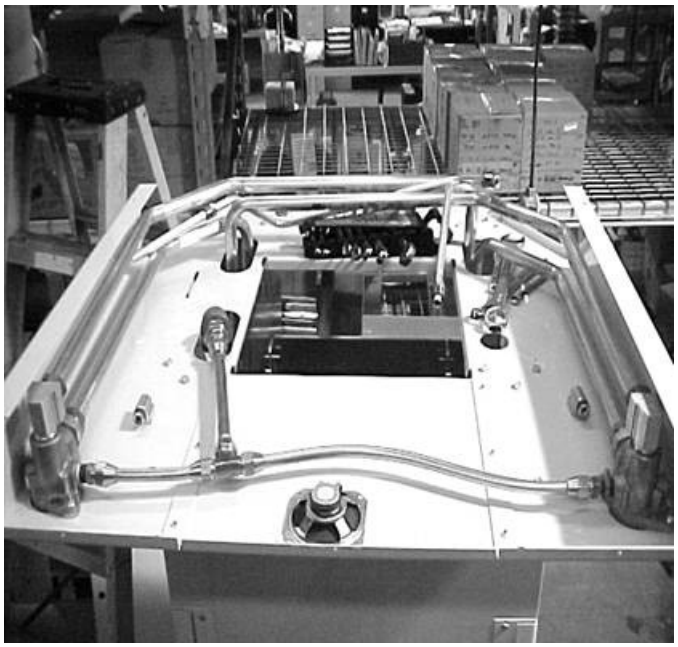

Photo K

Photo L

- Install a 3/8” NPT x 5/8” flare straight fitting into the vapor port of both outlet castings, see photo K.
- Install a 3/4” NPT x 5/8” flare straight fitting into each end of the 3/4” elbow supplied in the Healy vapor kit.
- Make up (3) pieces of 5/8” OD tube and attach as shown in photo K. The lengths are approximately as follows: 15-1/2” from the right outlet casting, 4-1/2” from the left outlet casting and 10” from the 3/4” elbow to the tee. Do not block column area.
- Make up the following assembly, see photo L. Note: The ball valve handle closes toward you. Install a 1/2” NPT x 5/8” flare straight fitting to the left side of the ball valve, install the 1/2” close nipple to the right side then the 1/2” reducing tee and the 1/2” NPT x 5/8” flare elbow – completely tighten the tee with the 1/4” branch facing up and the elbow also facing up, install the 1/4” pipe plug into the branch.

- Make up a piece of 5/8” OD copper tube that will go from the flare elbow on the inlet of the VAC pump, through the upper 1-1/8” hole in the column to the straight flare fitting on the ball valve assembly so that when installed and secured, positions the flare elbow on the ball valve assembly in a straight line with the straight flare fitting that’s attached to the 3/4” elbow of the upper vapor manifold. Install and tighten with the ball valve assembly in position as shown in photo L.
- Make up a piece of 5/8” tube to connect the flare elbow on the ball valve assembly to the straight flare fitting that’s attached to the 3/4” elbow of the upper vapor manifold. This piece should be made so that when installed the ball valve assembly and tubing should be horizontal or slightly pitched toward the pump to avoid liquid traps. Install and tighten.
- Mark the location of the mounting bolt holes from the VAC pump base on the shelf, unscrew the flare nut on the inlet and move the VAC pump out of the way. Drill two 5/16” holes (one on each side of the bracket) required for mounting the pump.
- Reposition the VAC pump and reconnect the flare nut to the inlet port, then install the two 1/4-20 bolts, washers, lock washers and nuts to secure the pump.

Photo M

Photo N

- Measure and cut appropriate length of 5/8” tubing to reach from the 5/8” flare elbow on the outlet of the VAC pump, through the lower 1-1/8” hole in the column to the 5/8” flare straight fitting installed in the 3/4” elbow at the base of the dispenser, using a 90 degree bend, see photos M & N.
- Install and tighten making sure the horizontal portion of the tube attached to the outlet is either horizontal or slightly pitched downward away from the pump to avoid liquid traps.

11. INSTALLING THE SEALED NIPPLE ASSEMBLY: (See Photos O & P)

NOTICE: THE INTERFACE MODULE THAT IS SUPPLIED HAS A HARNESS ATTACHED AND A WIRING PLUG FOR THE AC CONNECTIONS. ALSO SUPPLIED IS THE SEALED NIPPLE ASSEMBLY (1346) THAT MUST BE USED BETWEEN THE DIVISION 1 AREA (THE ELECTRONICS COMPARTMENT) AND THE DIVISION 2 AREA (THE SPACE ABOVE AND OUTSIDE THE ELECTRONICS COMPARTMENT).

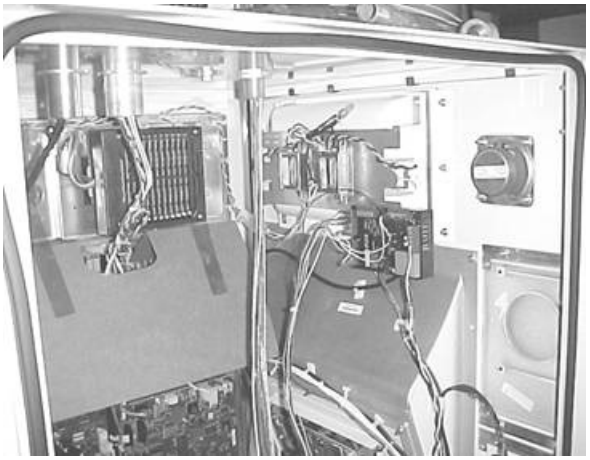

Photo I

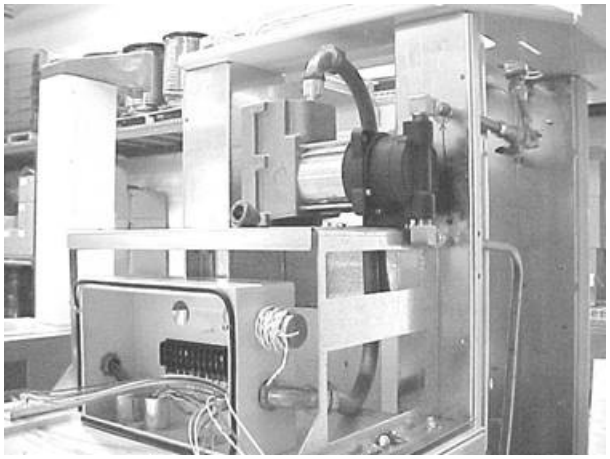

Photo P

- Get the 1346 sealed nipple assembly and carefully remove the first nut and washer over the wires. Thread these wires from inside the electronics compartment, up through the hole inside the ”J” box, (bottom right) where the Wayne VAC™ potted nipple was removed. Carefully replace the washer and nut over the wires and secure the unit into the box.
- At the VP1000, get and install the 1/2” male x 3/4” female adaptor over the wires coming from the motor. Do not use pipe dope on these fittings and be sure there is at least five full threads of engagement of the fittings in their respective couplings.
- Thread the pump wires through the elbow that was removed from the Wayne VAC™ motor electronics housing and screw the threaded end with the “O” ring into the 1/2” male x 3/4” female adaptor installed in the above step. Tighten so that the elbow faces away from the “J” box, see photo P.
- Get the electrical tube that was left hanging during the Wayne VAC™ removal, and route up to the VP1000 VAC pump as shown in photo P.
- Run the electronic wires from the VP1000 through the electrical tube and into the “J” box as shown. Reconnect the electrical tube to the elbow on the VAC pump.
- In the “J” box, leave about 6” of wire on both the wires coming from the motor and from the sealed nipple, cut off excess wire and strip approximately 1/2” of insulation from all wires.
- Use wire nuts to join the wires, color for color, together. There may be some extra wires in some sealed nipples, cap these off and dress aside.
- Keep wires clear of pinch points and from interference, make sure no wires overhang the door openings.
- Replace the cover on the junction box.

12. WIRING INSIDE THE ELECTRONICS COMPARTMENT: (See Photos Q, R, S, & T)

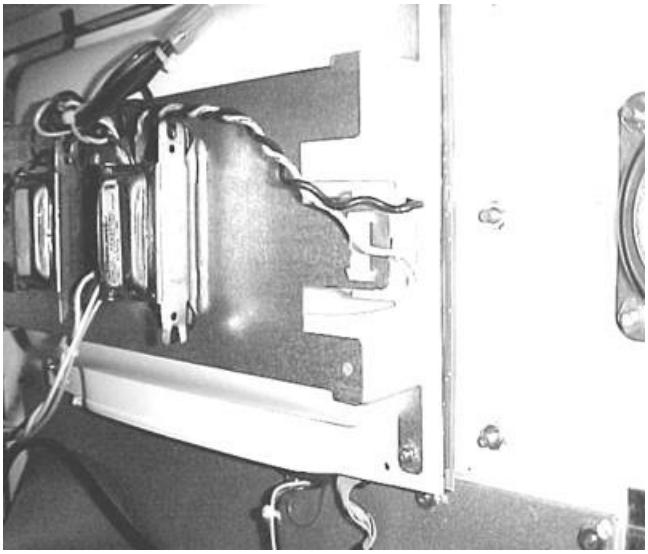

Photo Q

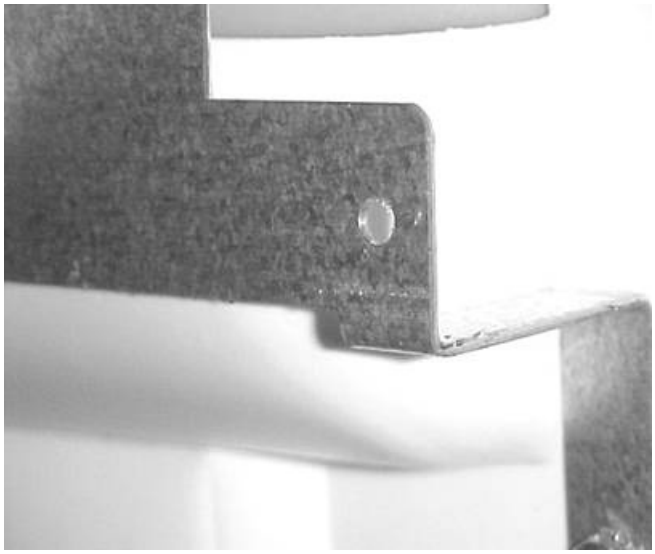

Photo R

- In the electronics bay, locate the light assembly on the upper right side of the cabinet, see photo Q. In photo R, notice the 3/16” hole that must be made to accept the module mounting screw. Punch this hole approximately as shown. If drilling, be sure no hazardous vapors are present and use a coffee cup or other suitable container to prevent metal chips from falling inside the cabinet.

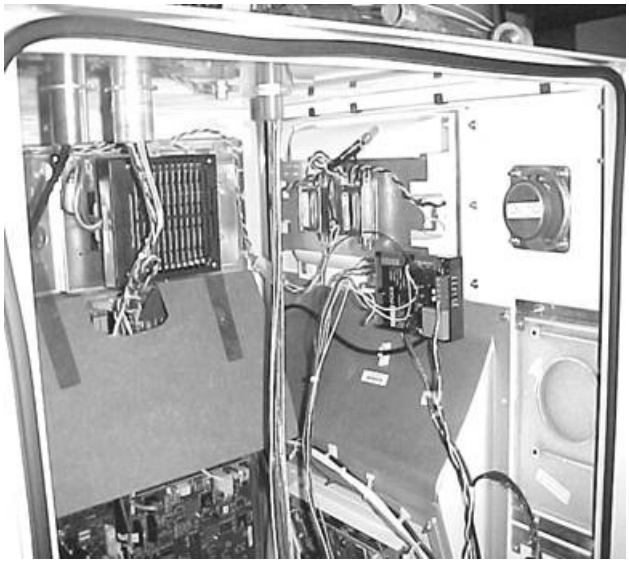

Photo S

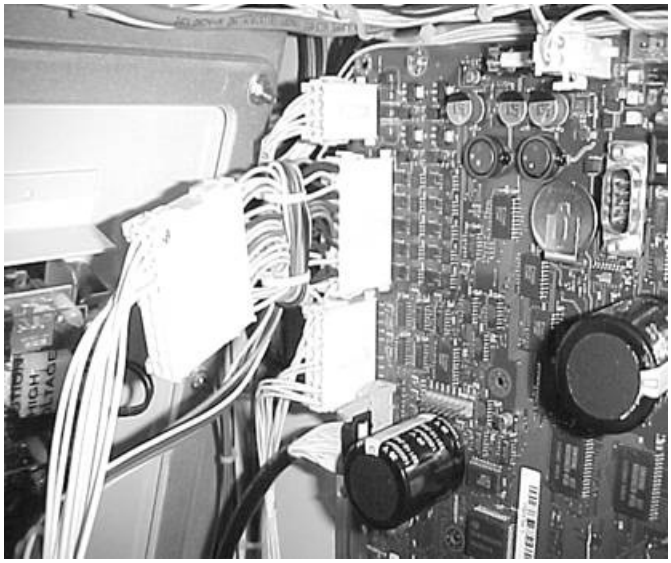

Photo T

- Leave the wires coming from the sealed nipple assembly at least six inches longer than necessary to reach the bottom of the compartment. Cut off excess and strip all wires 1/2”.

- Connect the wires from the sealed nipple to the interface module as follows:
  - Black wire to ‘motor ‘ on module
  - White wire to ‘neutral’ on module
  - Red wire (either) to ‘output 1’ on module
  - Red wire (other) to ‘output 2’ on module
  - Orange wire to ‘fault common’ on module
  - Purple wire to ‘fault input’ on module
  - Green wire needs a #8 ring tong lug installed and connected to any chassis ground (frame)
  - Some sealed nipples may have some extra wires, cap these and bundle them neatly out of the way.
  - The black and white twisted pair of wires with a connector should be connected to an available AC outlet on the dispenser Relay Board #887225.
- The male/female multiconductor cable that is wired to the interface module is routed up to the computer board # 173976, see photo T. Disconnect the valves cable that’s in the J3 connector and install in the female side of the double connector on the harness. The entire assembly is then installed back into J3 on the Computer board. WIRING IS COMPLETE.
- Mount the interface module as shown in Photo S using the 8-32 x 5/8” screw, washer and nut supplied in the electrical kit.
- Install the following labels supplied:
  - NOTICE label for current increase (1405), install on the frame rail near the existing power consumption label.
  - Large NOTICE label (1406) relating to the vapor recovery upgrade and how to reset the electronic module should be installed near the module, where it will be readily visible to a service technician on the junction box cover.
  - UL, retrofit kit identification number (1410), install on the electronic module.

13. CONNECTING HEALY SYSTEMS DISPENSING EQUIPMENT

- Completing the connection of Healy Systems dispensing equipment requires the installation of Healy Systems Phase II dispenser adaptors, hoses and nozzles (Hanging Hardware).
- If applicable, remove existing non-Healy hanging hardware (from the dispenser product outlet adaptor to and including the nozzles).
- Vapor ready dispensers will require a Healy Systems adaptor to make the hose threads compatible with other Healy Systems equipment. Install following instructions packed with the adaptor. Various adaptors and pigtails are available, depending on how the dispenser is configured: M34 metric (Healy designation F3 or S3) or balance ready (Healy designation S4).

- Healy Vapor Recovery Hoses are available in various lengths to satisfy local ordinances and still provide “far side” fueling capability. Install these following instructions contained on the shipping box.
- Breakaways are required: Install either Model 8701-VV breakaway or Model 807 swivel breakaway; install using the instructions supplied with the unit.
- The Healy Systems nozzle Model 900 (EVR) is the only nozzle necessary to complete the upgrade. Check to be sure the nozzle hanger is mounted in the highest position. Be sure to check for proper fit in the nozzle holster and that the nozzle can be locked in the off position. Also, be sure that when the nozzle is locked, that the dispenser can not be activated from the locked position.

14. VP1000 THEORY OF OPERATION

The Healy Systems VP1000 is a self-contained rotary vane pump, designed for gasoline vapor recovery utilizing various parts of the Healy System Vapor Recovery product line. It is intended for use by either OEM dispenser/pump manufacturers or as an after market add-on to make existing equipment compatible with Healy System technology. In order to convert to ‘others’ equipment, an electronic interface is required to adapt the targeted pump/dispenser to the new vapor recovery equipment. The interface senses when authorization to dispense has been given and sends signals to the motor to operate at a low speed for one hose, or a higher speed for two hoses. It also functions to shut off the pump/dispenser if it senses that the vapor pumpis not operating properly. The vacuum is regulated at a level sufficient to clear liquid gasoline from the vapor path in MPD applications. The actual amount of vapors withdrawn is controlled by the Healy nozzle, itself, in response to the liquid gasoline flow rate.

MOTOR SPECIFICATIONS

Horsepower	1/8 HP
Voltage	120 VAC

INTERFACE SPECIFICATIONS

Input voltage	120 VAC
Relay current capacity	5A AC
Input signals	AC and DC voltages up to 130 VAC max
Motor Input signal	5 VDC @ 20 Hz 50% Duty Cycle

15. TESTING THE SYSTEM:

- Carefully review all work completed, being sure all mechanical joints are thoroughly tightened and electrical connections sealed.
- Open the product crash valves and restore power to the dispenser.
- With the power on, but no nozzles authorized, the VP1000 should not be running (unless the ambient temperature is below 40°F), but the power LED (yellow) should be energized on the interface module.
- Authorize one handle and the vacuum system should activate when the gasoline flow control valve is engaged. Repeat for all other nozzles, individually testing each nozzle on each side of dispenser. With each authorization, one of the green LED's on the interface module should illuminate and the VP1000 activate.
- Note: For unihose dispensers, conduct individual tests for each product grade on each side of the dispener to ensure that the same LED activates for all grades on the same side. If the other LED activates, wiring needs to be corrected.
- Authorize one nozzle and listen to the speed of the VP1000. With only one nozzle activated, the speed will be slower than if a nozzle on <u>each side</u> is activated. Activate a nozzle on the other side of the dispenser and listen for the speed to change.
- To test the tightness of the vapor plumbing installed on the suction side of the system requires a 0-100" water column gauge. Connect the gauge into the 1/4" test port of the reducing tee installed earlier in section 10 Photo L. Continue by following and completing the START-UP / NEW INSTALLATION / WARRANTY / ANNUAL TESTING FORM.

16. TROUBLESHOOTING THE VP1000:

- Use extreme care and caution when performing the tests listed below. If 120 VAC is accidentally applied to the fault or DC terminals, the module will be destroyed.
- With power applied to the dispenser, but no products authorized, there should be 120 VAC between neutral and 120 VAC on the module terminal strip.
- As above, with any product authorized, there should be single speed power applied to the VP1000. Verify this by checking for 2-3 VDC from OUTPUT 1 (RED WIRE) to FAULT COMMON (ORANGE WIRE), (or from OUTPUT 2 TO FAULT COMMON) also; one GREEN LED should be illuminated. With a second product authorized on the opposite side of the dispenser i.e. one product on each side, the motor should operate at higher speed and there should be 2-3 VDC on both output 1 and 2 (to fault common) and both GREEN LED's should be illuminated.
- With the pump running, a fault can be simulated by shorting, with a jumper wire, the "FAULT INPUT" (purple wire) to FAULT COMMON (orange). This should cause the motor to shut off, the solenoid valves to lose power and the dispenser to shut down. Also, as long as the short is maintained, the red LED will be illuminated. Removing the short will not automatically reset the module. To reset the module, remove the short, remove power to the dispenser for twenty seconds and restore power. The module should now be reset and the red led extinguished. This can also be accomplished by using the power reset (PWR RESET) on the module.

- If diagnosing a problem where the LED is already illuminated, a steady light indicates a low current condition, therefore expect a vane or rotor problem. If the LED is blinking, that indicates a high current condition and would expect to find a jammed rotor or vapor line flooded with product. See Start-up / New Installation / Warranty / Annual Testing Form.
- The electronics of the motor will make three attempts to have a successful start of the motor. If it detects a problem, on the fourth unsuccessful start, it will short the fault line to signal minus (DC-) and shut down the electronics.

MC 100 Interface Module

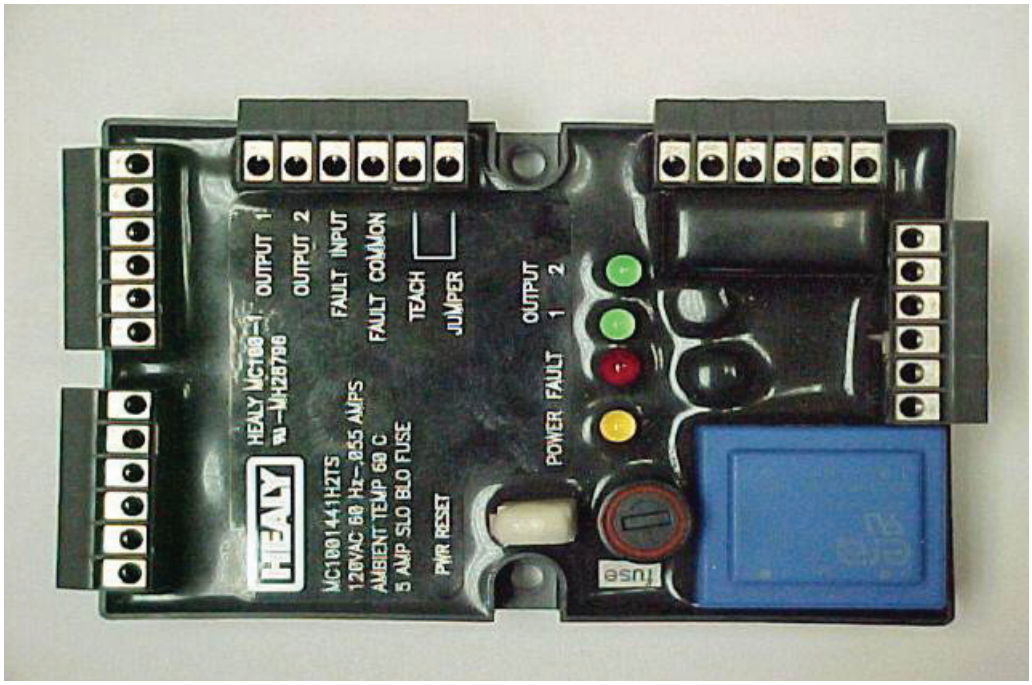

17. VP1000 VANE & ROTOR SERVICE & REPLACEMENT GUIDE

Caution **Disconnect power before beginning service.**

1. The work area **must** be clean and have sufficient lighting.
2. Disconnect the vapor piping connected to the **IN** and **OUT** ports of the VP1000 cover assembly.
3. Remove the four Allen head screws and lock washers that secure the pump cover assembly to the pump housing and remove the cover carefully.

Caution **Use a spill cloth when removing the cover, as there may be some gasoline inside the pump cavity**.

4. Carefully turn the rotor assembly by hand until the shaft key notch is at the 12 o'clock position. (See Figures)
5. Remove the rotor, vanes and shaft key from the pump housing.

Note: Place your hand or a container under the rotor while removing. Do not use any sharp objects that would scratch the surfaces of the pump cavity, pump shaft, rotor, or vanes.

6. Rotate the shaft by hand. If the shaft does not rotate freely, the entire vacuum pump needs replacement (p/n VP1000-5 or RVP1000-5).
7. If the rotor and vanes are cracked, chipped, excessively worn or excessively dirty, the rotor and vanes should be replaced because cleaning will not remedy these conditions (p/n VP1000VRC-G, VP1000VRC-P or VP1000VRC).
8. If there is no visible damage, use a lint-free cloth with isopropyl alcohol to clean the rotor and vanes.
9. Using a lint-free cloth with isopropyl alcohol, thoroughly clean: the inside of the pump ring and rear of the pump cavity, the rotor shaft, and the inside of the pump cover.
10. Reposition the shaft (if necessary) so that the shaft key notch is in the 12 o'clock position. Install the cleaned original or new shaft key onto the shaft.
11. Carefully install the cleaned original or new rotor onto the shaft followed by the cleaned original or new vanes into the rotor.

Note: The rotor assembly should slide on to the shaft easily, without excessive force. (Rotors and vanes are reversible)

12. Lightly lubricate and install the new O-Ring for the pump housing.

Note: Do not allow any lubricant to get inside the pump housing.

13. Install the pump cover using the four Allen head screws and lock washers removed in step 3 and cross tighten.

Note: Use caution when sliding the pump cover over the O-Ring seal to prevent cutting or tearing.

14. Re-connect the vapor piping to the **IN** and **OUT** ports of the pump cover assembly that was removed in Step 2.
15. Re-apply power. Test for normal operation. (See VP1000 Vacuum Performance Test Procedure)

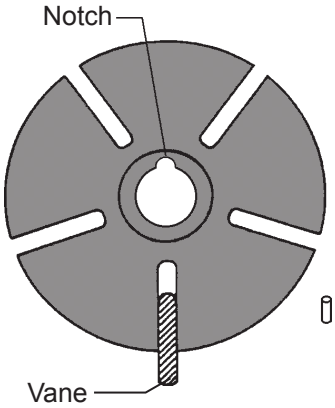

Figure 1
VP1000VRC
Carbon Rotor
(Obsolete)

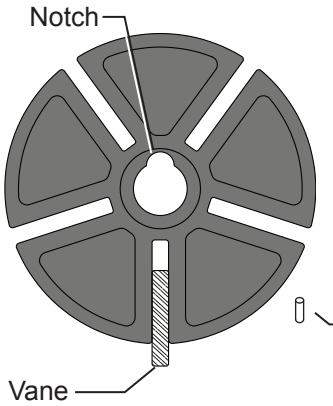

Figure 2
VP1000VRC-P
Enhanced Carbon
Fiber Rotor
(limited avai*lability)*

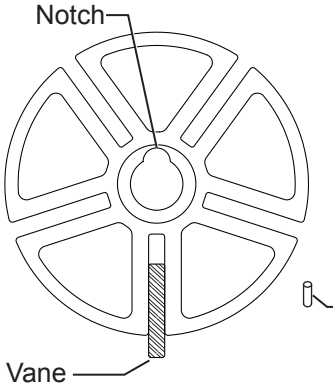

Figure 3:
VP1000VRC-G
Enhanced
Glass-Fiber Rotor

START-UP/NEW INSTALLATION/ WARRANTY/ ANNUAL TESTING FORM (Rev. 10/07)
HEALY VP1000 VACUUM PUMP

Date_____

BOTH SIDES OF THIS TEST FORM MUST BE COMPLETED FOR NEW INSTALLATIONS

- **Start-up / New installations – complete SIDE A and sections 3, 4, 5 and 6 of SIDE B. Submit forms to Healy Systems.**
- **Warranty Service or Annual Testing – complete contact information, dispenser make, vacuum pump serial # and the tests in sections 1 and 2 on SIDE A and conduct the appropriate tests specified on SIDE B. Submit Forms to Healy Systems.**

SERVICE COMPANY NAME	TELEPHONE	
SERVICE TECHNICIAN	HEALY TECH CERT #	
STATION ADDRESS	CITY	STATE
DISPENSER MAKE	**VACUUM PUMP SERIAL #**	

SIDE A

DISPENSER EQUIPMENT CHECKLIST - Parts A-1 and A-2		**YES**	**NO***
A-1	Is all the installed dispenser hanging hardware listed in Exhibit 1 of Executive Order VR-201 or VR-202?		
A-2	Proper installation of the VP1000 requires the test port and ball valve on the inlet side of the vacuum pump. Are the test port and ball valve installed correctly?		
	***If the answer to either A-1 or A-2 is NO, the Healy Warranty is Void.**		

A-3

- THE FOLLOWING TEST WILL PERFORM A POSITIVE PRESSURE LEAK CHECK OF THE VACUUM PUMP, DISPENSER VAPOR PIPING, HANGING HARDWARE AND ALL NOZZLES ON BOTH SIDES OF THE DISPENSER.
- THE VP1000 OUTLET IS NOT CONNECTED TO UNDERGROUND PIPING DURING THIS TEST.

CAUTION: REGULATE GASEOUS NITROGEN TO 2.5 PSI (~70" WC) MAXIMUM BEFORE TESTING

1. Install a 0-100 inch water column (" wc) mechanical gauge at the VP1000 test port.
2. Use the water column gage positive (high) pressure port.
3. Gaseous nitrogen gas can now be connected to the outlet (exhaust) port of the VP1000.
4. Test pressure **cannot** exceed 70" wc.
5. **Slowly** introduce the gaseous nitrogen to a pressure between 60 – 70" wc.
6. After reaching the pressure range, close the valve supplying the gaseous nitrogen.
7. Record the initial pressure reading on the gauge - observe and record the final pressure reading after 60 seconds.
8. Leaks must be repaired when the pressure falls more than 4" wc in 60 seconds.
9. Retest until all leaks have been repaired.
10. Record test results in Section A-4.

A-4 **PRESSURE TEST** **2.5 PSI (~70"wc) Maximum**	**Initial Pressure test reading ("wc)**	**Pressure test reading after 60 seconds ("wc)**

START-UP/NEW INSTALLATION/ WARRANTY/ ANNUAL TESTING FORM (Rev. 10/07)
HEALY VP1000 VACUUM PUMP

Date_____

BOTH SIDES OF THIS TEST FORM MUST BE COMPLETED FOR NEW INSTALLATIONS

- **Start-up / New installations – complete SIDE A and sections 3, 4, 5 and 6 of SIDE B. Submit forms to Healy Systems.**
- **Warranty Service or Annual Testing – complete contact information, dispenser make, vacuum pump serial # and the tests in sections 1 and 2 on SIDE A and conduct the appropriate tests specified on SIDE B. Submit Forms to Healy Systems.**

SIDE B

Warranty Service Complete Troubleshooting Sections **B-1 and B-2**	*Start-up/ New Installations/ Annual Testing* Complete Sections **B-3 through B-6**

B-1

Control Module Fault Light

(Circle one) Flashing (LED) Steady (LED)

1. All fault conditions require removal and cleaning or replacement of the rotor and vanes located inside the vacuum pumps round front cover assembly. Use the **VP1000 ROTOR & VANE SERVICE AND REPLACEMENT GUIDE** in the applicable dispenser retrofit manual of the ARB Approved Installation, Operation and Maintenance Manual for Executive Orders VR-201-O and VR-202-O.
2. Clean all surfaces including vanes, rotor, rotor housing and cover assembly.
3. Manually spin and inspect the motor shaft for bearing wear before re-installing the rotor kit.
4. Replace motor when bearings or shaft are damaged or worn.
5. Check O-ring seal before replacing rotor cover assembly.

B-2

Re-Assemble / Reset Vacuum Pump and Module. (Power must be removed from both the vacuum pump and the **module for 20 seconds to reset the system**) using the power reset switch on the MC100 module.

B-3

Dispenser Vapor Line Integrity Test

1. Install 0-100 inch water column (“ wc) vacuum mechanical gauge at the VP1000 test port.
2. Authorize the dispenser for fueling. The VP1000 will begin to run.
3. Close the ball valve at the pump inlet.
4. Record the initial vacuum reading on the gauge – observe and record the final vacuum reading after 60 seconds.
5. Open the ball valve at the pump inlet.
6. Leaks must be repaired when the vacuum reading falls more than 4” wc in 60 seconds.
7. Retest until all leaks have been repaired.
8. Record data in Section B-4.

Note: If the initial vacuum reading is less than 60” wc, it could indicate a problem with the VP1000. Remove the dispenser from service. Use the troubleshooting section of the manual to investigate problem or contact the FFS Technical Help Desk at 800-984-6266 for assistance.

B-4

VACUUM TEST Using VP1000 as vacuum source	Initial Vacuum test reading (“ wc)	Vacuum test reading after 60 sec. (“ wc)

B-5

Dispenser Vaacuum Test

With one side of the dispenser authorized (VP1000 running) and the ball valve at the pump inlet open, dispense in handheld position a minimum of 0.5 gallons of fuel into a vehicle or test tank. Record the vacuum level while dispensing. Repeat test for the other side of the dispenser.

1. Side “A” Dispensing Vacuum _____” wc
2. Side “B” Dispensing Vacuum _____” wc

Note: If the dispensing vacuum is less than 60” wc, remove the dispenser from service. See the troubleshooting section of the manual or contact FFS Technical Help Desk at 800-984-6266 for assistance.

B-6

Audible Increase Test

Test the VP1000 Vacuum Pump for normal operation. Use the 6 step procedure titled, “Testing the VP1000 Vacuum Pump for normal operation using the following test procedure:” in Section 1.1 (Weekly Inspection and Testing) of the Healy Systems Scheduled Maintenance document in the ARB Approved Installation, Operation and Maintenance Manual for the Healy Phase II EVR System not Including ISD. This is to verify that the pump recognizes when both sides of the dispenser are activated for fueling.

Does the VP1000 Vacuum Pump change speeds (audible increase) when both sides are activated for fueling?

Yes No

If the answer is no, **use the troubleshooting section of the manual to investigate problem or contact the FFS Technical Help Desk at 800-984-6266 for assistance.**

Repairs - Comments	To Obtain Returned Materials Authorization number (RMA#) Call 800-984-6266 Forms can be faxed to Franklin Fueling Systems Customer Service at 800-225-9787