HEALY

Franklin Fueling Systems

Vapor Recovery Assist System

Universal Manual

VP1000

This Universal Manual is to be used for new, replaced, retrofitted, or reconditioned dispensers/pumps that do not have a dispenser-specific installation manual listed in Franklin Fueling Systems Executive Order VR-201 or VR-202.

Contents

Important Safety Messages

Introduction

Description of Operation
- Vacuum Pump Features

Preparation
- Parts List
  - VP1000 (A-K) Kit
    - VP1000 Kit Table
  - Electrical Kit Z070E (Universal)
  - Vapor Kit Z071V (Universal)
- Tools Required
  - Dispenser Access
  - Dispenser Survey
  - Before Mounting the Vacuum Pump

Installing the VP1000 System
- Mounting the Vacuum Pump & Electrical Conduit Assembly

Installing the MC100 Control Module
- Overview
- Mounting the MC100 Control Module

Dispenser Specific Wire Harness Installation
- AC Power to the module

Generic Dispenser Wire Harness Installation - 1360A
- A Side
- B Side

1316 Potted Conduit Wiring

Installing Dispensing Hanging Hardware
- Installing Dispensing Equipment
- Hose Adapters

Testing the System

Troubleshooting the VP1000

VP1000 Vane & Rotor Service & Replacement Guide

Start-up/New Installation/Warranty/Annual Testing Form

Important Safety Messages

Franklin Fueling Systems (FFS)/Healy equipment is designed to be installed in association with volatile hydrocarbon liquids such as gasoline and diesel fuel. Installing or working on this equipment means working in an environment in which these highly flammable liquids may be present. Working in such a hazardous environment presents a risk of severe injury or death if these instructions and standard industry practices are not followed. Read and follow all instructions thoroughly before installing or working on this, or any other related, equipment.

As you read this guide, please be aware of the following symbols and their meanings:

Warning This symbol identifies a warning. A warning sign will appear in the text of this document when a potentially hazardous situation may arise if the instructions that follow are not adhered to closely. A potentially hazardous situation may involve the possibility of severe bodily harm or even death.

Caution This is a caution symbol. A caution sign will appear in the text of this document when a potentially hazardous environmental situation may arise if the instructions that follow are not adhered to closely. A potentially hazardous environmental situation may involve the leakage of fuel from equipment that could severely harm the environment.

Warning **Follow all applicable codes governing the installation and servicing of this product and the entire system. Always lock out and tag electrical circuit breakers while installing or servicing this equipment and any related equipment. A potentially lethal electrical shock hazard and the possibility of an explosion or fire from a spark can result if the electrical circuit breakers are accidentally turned on during installation or servicing. Please refer to the Installation and Owner's Manual for this equipment, and the appropriate documentation for any other related equipment, for complete installation and safety information.**

Warning **Follow all federal, state and local laws governing the installation of this product and its associated systems. When no other regulations apply, follow NFPA codes 30A and 70 from the National Fire Protection Association. Failure to follow these codes could result in severe injury, death, serious property damage and/or environmental contamination.**

Warning **Always secure the work area from moving vehicles. The equipment in this manual is usually mounted underground, so reduced visibility puts service personnel working on this equipment in danger from moving vehicles entering the work area. To help eliminate these unsafe conditions, secure the area by using a service truck to block access to the work environment, or by using any other reasonable means available to ensure the safety of service personnel.**

Warning **Use circuit breakers for multiple disconnect to turn off power and prevent feedback from other dispensers.**

Introduction

This procedure describes the tools, methods and skill levels required to install a Healy Systems, Inc. Model VP1000 Vapor Recovery Pump in new, replaced, retrofitted, or reconditioned dispensers that do not have a dispenser specific installation manual listed in Franklin Fueling Systems Executive Order VR-201 or VR-202. Only Healy trained and certified contractors may perform these retrofits or the warranty will be voided. The installer must also be a skilled petroleum technician and thoroughly familiar with the State, Federal and local code requirements for the installation and repair of gasoline dispensing equipment. In addition, they shall be aware of all the necessary safety precautions and site safety requirements in order to assure a safe, trouble-free installation.

Note: Installations of vapor piping into the inlet side of the vacuum pump should be sloped such that the natural flow direction is toward the vacuum pump. However, it is permissible to have a piping slope tilted away from the vacuum pump provided that all other applicable tests (Dispenser integrity and V/L) meet the specifications outlined in the appropriate section of the Executive Order and ***ARB Approved Installation, Operation and Maintenance Manual***.

Note: For installations with In-Station Diagnostics (ISD), the vapor flow meter shall be installed on the down stream side of the vacuum pump. Every effort shall be made to install the vapor flow meter so that vapor piping between the vacuum pump and the vapor flow meter is sloped such that the natural flow direction is toward the vapor flow meter. However, it is permissible to have the piping slope away from the vapor flow meter provided that all other applicable tests (Dispenser integrity, V/L and ISD Operability) meet the specifications outlined in the appropriate section of the Executive Order and ***ARB Approved Installation, Operation and Maintenance Manual***.

Description of Operation

The Healy Systems VP1000 Vacuum Pump is typically mounted in the lower hydraulic area of a dispenser or self-contained gasoline pump. It works as a component of a complete Stage II system which also includes a single universal control module and Healy Systems hanging hardware. It is intended for use by either OEM dispenser / pump manufactures or as an aftermarket retrofit to make existing equipment compatible with Healy Systems technology.

Specifications: 1/8 Hp, 120 VAC input, 2 Amp AC

Important: All electrical and hydraulic plumbing fittings referred to in these instructions must be UL "listed" or "recognized" for the purpose.

Important: The VP1000 will increase the current draw of the dispenser by two amps. Use the label supplied to note this change.

The preferred mounting position of the VP1000 Vacuum Pump is with the vacuum pump inlet and electrical connections facing upwards, towards the top of the dispenser (see Figure 1 below). If other mounting positions are desired because of mechanical constraints within the dispenser, please contact FFS Technical Services at 1-800-984-6266.

Nozzle & Hanging Hardware **MC100 Control Module** **VP1000 & Bracket**

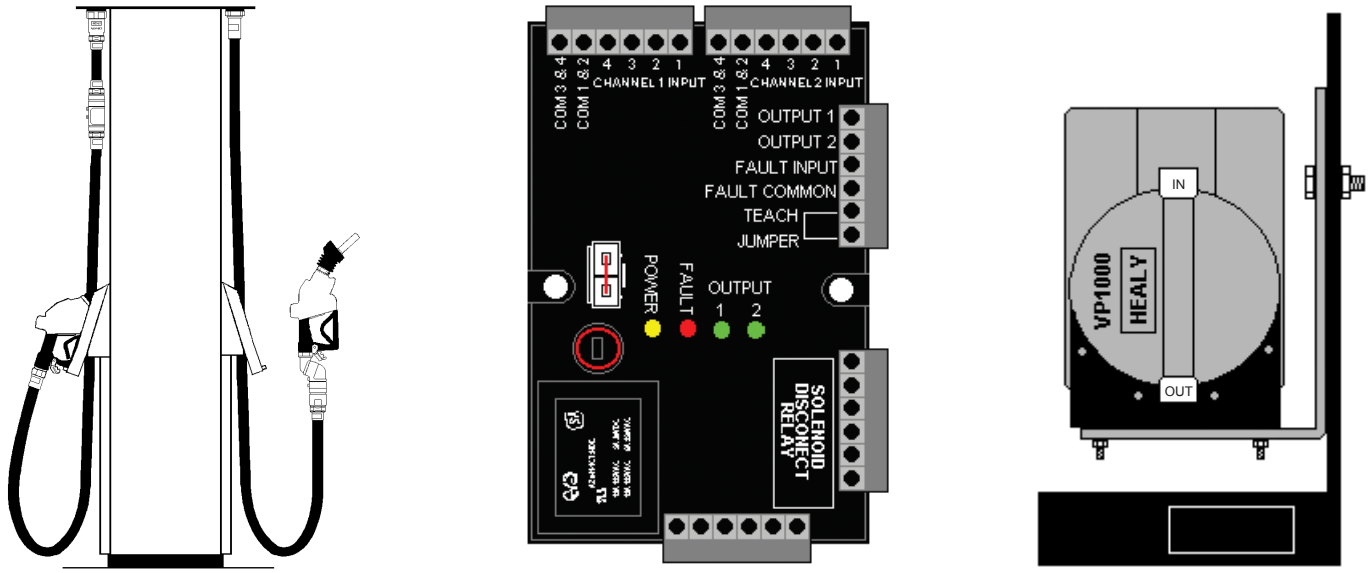

Figure 1

Vacuum Pump Features

- Operates at two speeds: Low Speed in response to one fueling point being activated, or High Speed if both fueling points are activated simultaneously.
- Contains performance protection devices that will shut off the vacuum pump and disable dispensing if the vacuum pump is not operating properly.
- Operates only with input signals from the control module, cannot be operated 'stand alone'.
- Contains low temperature activation circuits that turn the vacuum pump on at slow speed when the temperature drops below 40°F to prevent freezing.

Preparation

Parts List

This section illustrates the basic components needed to retrofit a VP1000 Vacuum Pump into any new, replaced, retrofitted, or reconditioned dispenser. This system can be installed in any “Non-Vapor or Vapor Ready” dispenser including dispensers with existing “Balance” or “VacAssist” piping. Three kits are required for complete retrofit installations: VP1000, Vapor, and Electrical. Other supplies beyond the three kits may also be needed to complete your installation (i.e. electrical nipples and, possibly, additional vapor connections).

Assorted lengths of “UL Listed” electrical nipples as well as pipe or electrical elbows and couplings will be required to complete vacuum pump installation.

VP1000 (A-J) Kit

Part	Quantity
MC100 Control Module	1
Wire Harness	1
VP1000 Vacuum Pump	1
Mounting Bracket with Hardware	1

Note: Universal Vapor & Electrical Kits must be ordered separately.

Figure 2

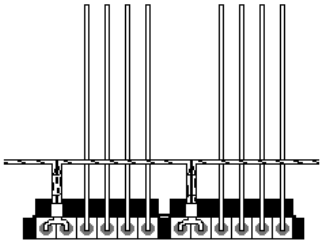

Universal Wire Harness

OR

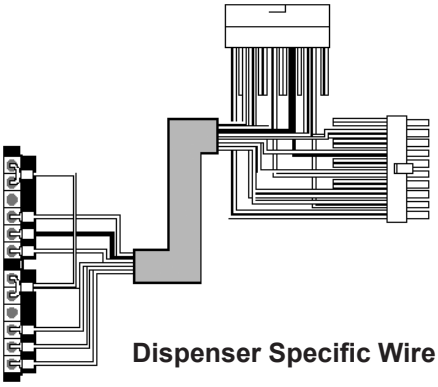

Dispenser Specific Wire Harness

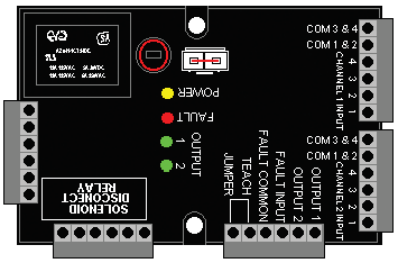

MC100 Control Module

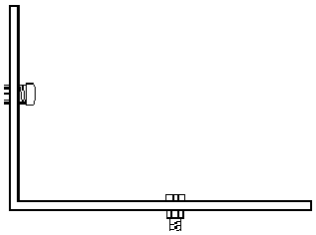

Mounting Bracket & Hardware

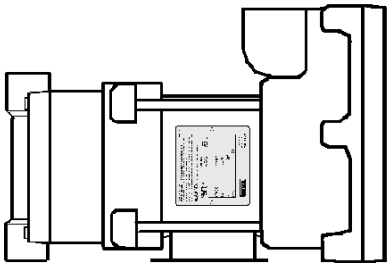

VP1000 Vacuum Pump

VP1000 Kit Table

Order Kit #	Description	Wire Harness
VP1000A	This Universal Wire Harness can be installed in any dispenser make or model. For use with any VAC or VDC Solenoid Valves.	1360
VP1000D	Early Gilbarco Encore 300 Blender Dispensers – 120 VAC Valves (manufactured before May 2003)	1368
VP1000G	Wayne & DL Non-Blender Dispensers – 120 VAC Valves	1354
VP1000H	Tokheim Premier C Blender Dispensers – 24 VDC Valves	1362
VP1000J	Early Tokheim Blender Dispensers – Combination 120 VAC & 24 VDC Valves	1372

Important: The VP1000 Kits listed above contain a specialized wire harness connection for each specific dispenser listed. All other components are identical and interchangeable.

Electrical Kit Z070E (Universal)

Part	Quantity
Explosion Proof Junction Box	1
Capped 90° Elbow	1
1/2" Union	1
Potted Conduit Nipple	1
1/2" x 3/4" Reducing Bushing	1
3/4" Coupling	1
3/4" Close Nipple	1
Electrical Current Change Label (p/n 1405)	1
Electrical Wire Nuts	12
Scotchlok® Wire Connectors	18

Figure 3

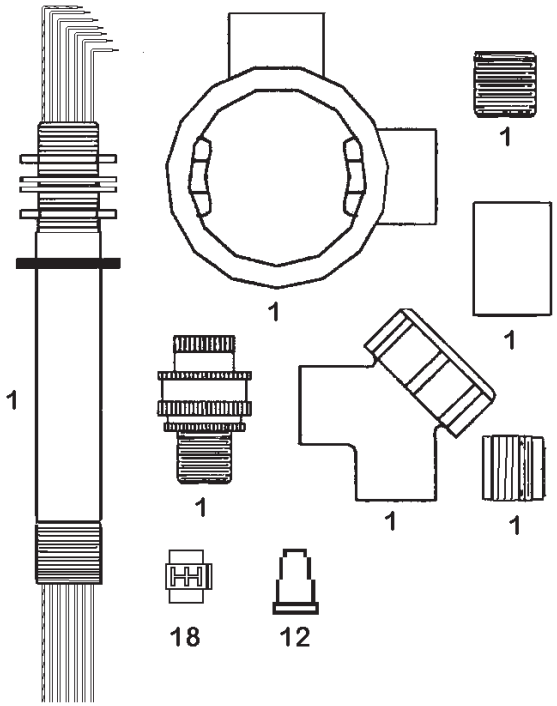

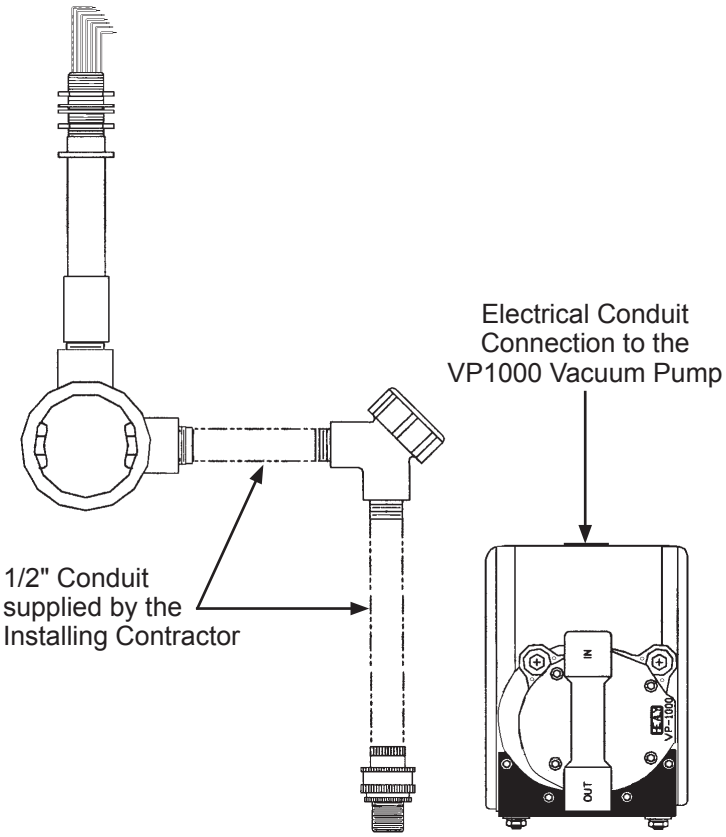

Figure 4

Example - Universal Electrical Kit Z070E

Vapor Kit Z071V (Universal)

Part	Quantity
12' Length type “L” Copper Tubing	1
1/2" Ball Valve	1
1/2" x 1/4" x 1/2" NPT Tee	1
1/4" NPT Hex Pipe Plug	1
1x1/2" NPT Reducing Bell	1
1x1/2" NPT Reducing Bushing	1
5/8" Flare Tee	1
1/2" NPT Street Elbow	1
Sheet Metal Screw	1
Cushioned Hold Strap	1
3/4"x1/2" NPT Bushing	2
1/2" NPT Close Nipple	3
1/2" NPT x 5/8" Flare Elbow	4
1/2" NPT x 5/8" Flare Straight	5
5/8" Flare Nut	8

Figure 5

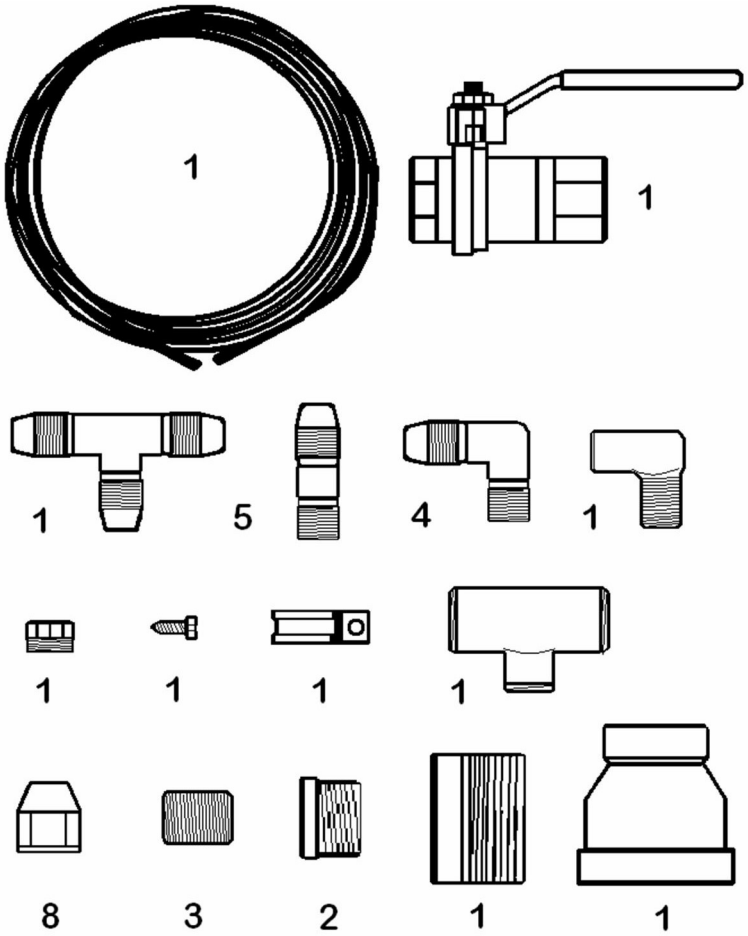

Figure 6

Example - Universal Vapor Piping Inlet / Outlet Configurations

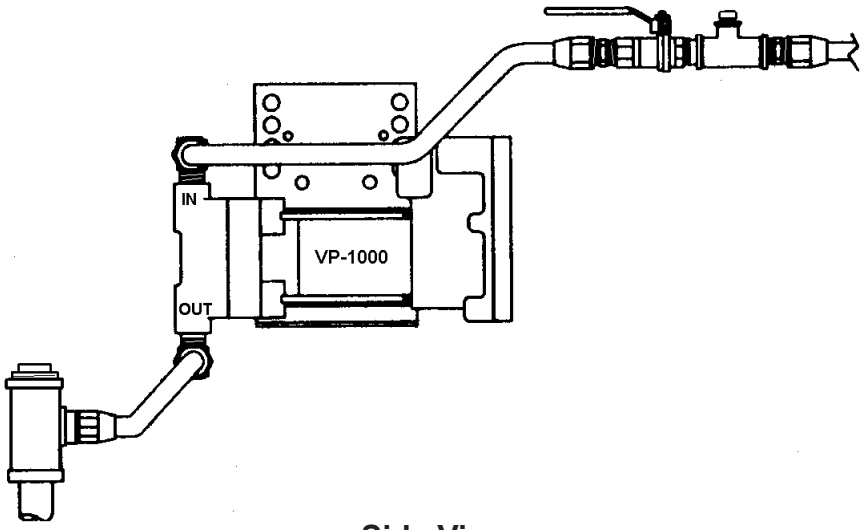

Side View

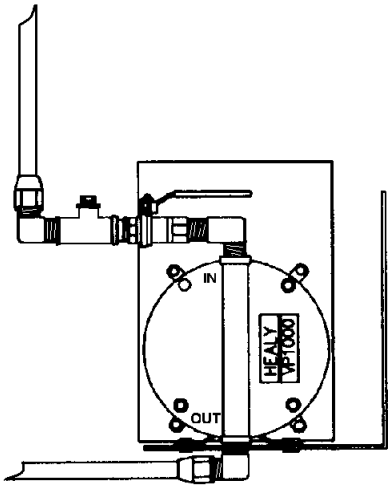

Front View

- VP1000 inlet and outlet piping/tubing can be installed in many different configurations to adapt to the available space within a dispenser/pump.
- Inlet piping must contain a test port and ball valve in the order shown above.
- Use Oil and gasoline compatible PTFE tape on all threaded vapor connections for both the inlet and outlet ports of the VP1000 vacuum pump. NO PIPE DOPE ALLOWED.
- Both Inlet and Outlet Piping requires the use of 5/8" O.D. “Type L” copper tubing in combination with ½" NPT x 5/8" Flare Fittings when connecting to existing dispenser vapor piping. NO COMPRESSION FITTINGS ALLOWED.
- Additional connectors or fittings may be required to adapt to the original dispenser piping.

Tools Required

- 0-100" Water Column Vacuum Gauge
- 9" Lineman's Pliers
- Assorted Open End Wrenches 1/4" through 3/4"
- Assorted Allen Wrenches
- Wire Cutters/Strippers 18 AWG and 26 AWG
- 3/8" Drill Assembly
- Assorted Drill Bits 1/16" through 7/16"
- 1/2" (5/8" O.D.) Copper Tube Bending Tool
- 1/2" (5/8" O.D.) Copper Flaring Tool
- Assorted Screwdrivers (Flat blade-one must be 1/8" wide)
- 1 1/8" Sheet Metal Hole Punch (for Potted Conduit Assembly)
- Copper Tubing Cutter
- Electrical Multi-Oeter
- 12" adjustable Wrench
- 18" Channel lock Pliers
- (2) 18" Pipe Wrench
- Hand Pipe Threader (for up to 1" pipe)
- Pipe Cutter (for up to 1" pipe)
- Tape Measure
- Oil and gasoline compatible PTFE Tape
- Thread Sealing Compound
- 1/2" or 3/8" Ratchet set w/Sockets 1/4" through 9/16" + 3" Extension

Dispenser Access

- Secure dispenser access keys from station management.
- Lock-out and tag-out all electrical power to dispenser being modified.
- Remove dispenser panels and open doors as required for installation.

Dispenser Survey

Close inspection of the dispenser is needed before any work begins. The survey should include the following observations:

- What vapor recovery system (if any) is currently installed – Balance or VAC Assist?
- Does the existing vapor piping have any obstructions inline such as solenoid valves or ball valves?
- The installer should take note of any possible obstructions that would effect the proper installation of the vacuum pump.

Before Mounting the Vacuum Pump

- The vacuum pump inlet cover must be accessible for service.
- Allow spacing for inlet piping test port and ball valve.
- An unobstructed path for the installation of vapor tubing.
- Allow space for electrical conduit components.
- Access point for the potted conduit through the vapor barrier.

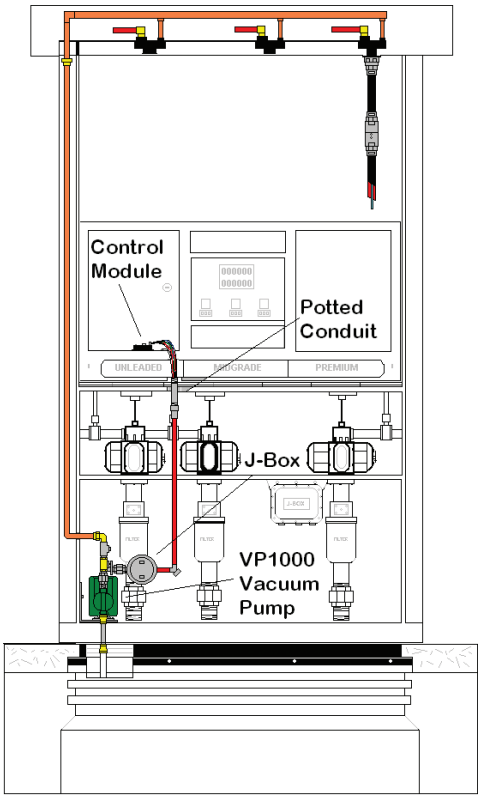

Figure 7

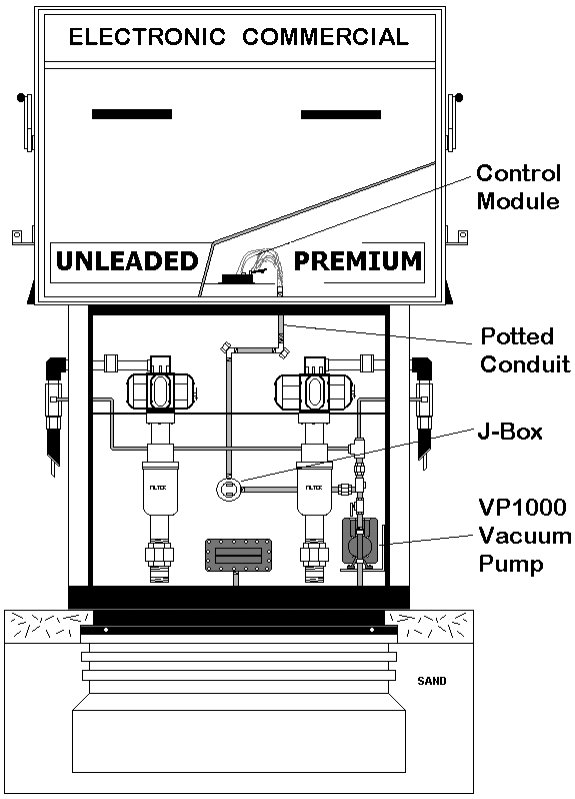

Installing the VP1000 System

Mounting the Vacuum Pump & Electrical Conduit Assembly

The VP1000 System must be installed by a Healy Certified Technician following all applicable federal, state and local codes & regulations.

Warning **Disable and tag-out all electrical feeds into the dispenser. No Electrical Power is allowed to the dispenser during the installation of the vacuum pump and control module.**

The recommended mounting position of the VP1000 vacuum pump is with the vacuum inlet and the electrical connection facing upwards towards the top of the dispenser.

- The vacuum pump's performance is not affected by the mounting location within a dispenser.
- The vacuum pump can be mounted at any location within the hazardous area of a dispenser if all applicable NFPA codes are followed.
- The installation must use "UL" approved electrical conduit, explosion-proof junction box and electrical union as required components connecting the VP1000 vacuum pump to the MC100 control module.
- For mechanical type dispensers the MC100 control module must be mounted in a dedicated "UL" listed explosion proof junction box.

The vacuum pump can be mounted on any solid surface or dispenser brace suitable to support the weight of the pump (32 lbs). The black steel bracket that is attached to the VP1000 Vacuum Pump can be removed and rotated (3 different mounting positions) so as to achieve the recommended mounting position of the pump as mentioned above. If additional support is needed, the use of the universal steel bracket supplied in each kit is recommended. Each VP1000 kit comes with enough hardware and fasteners to secure both brackets.

1. Begin the installation by mounting the vapor pump in the location pre-determined by the Dispenser Survey in the Preparation Section of this manual. Do not final tighten the mounting bolts at this time.
2. Install the Potted Conduit Assembly (PN# 1316) in the location pre-determined by your survey (Figure 8). The potted assembly is used for the electrical conduit transition from the hazardous area into the electronic area where the MC100 Control Module will be located.
3. The opening required through the vapor barrier for the potted assembly must be 1-1/8" in diameter. Installers can use a sheet metal punch to create the opening or use an existing "punch-out" if available.
4. Remove the top hex nut and washer from the potted conduit assembly. Guide the potted assembly through the "punch-out" then replace the washer and thread the hex nut back onto the assembly and hand-tighten the assembly into place. If the dispenser has dual vapor barriers, the rubber washer is installed on the top side of the lower deck. (See Figure 8)

Figure 8

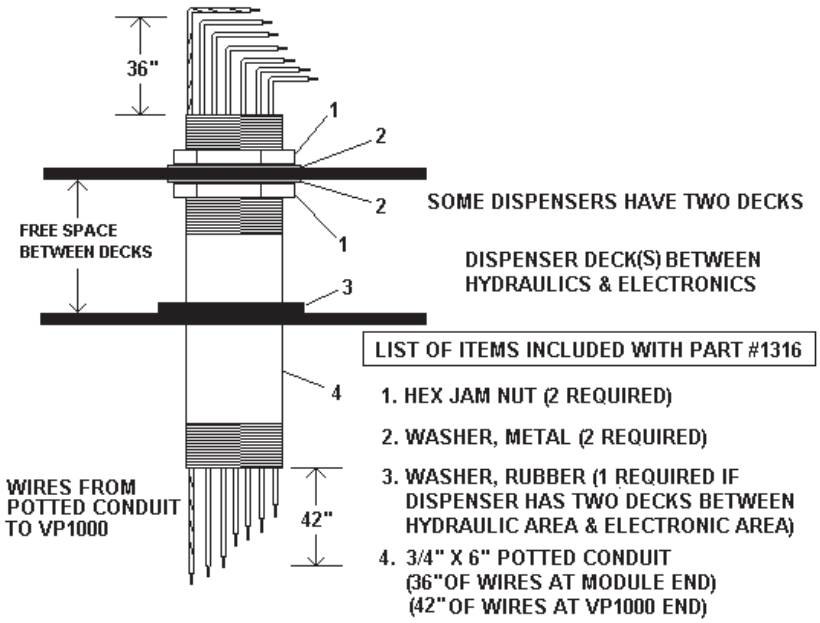

Figure 9

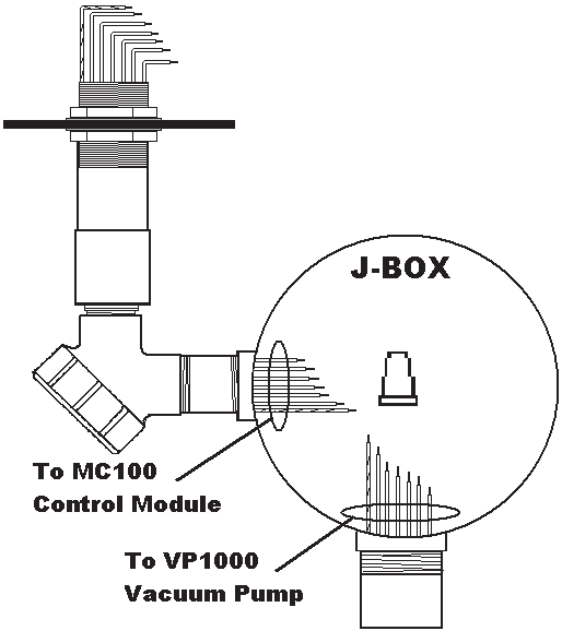

5. After the potted conduit and the VP1000 vacuum pump are in place (do not final tighten), you can begin to make up the electrical conduit that will connect the two components. Keep in mind that an electrical union and the explosion proof junction box must be installed between the two points.
6. Measure and select the proper size “UL” listed electrical nipples (not included). Feed the wiring from the potted conduit and the vacuum pump through the necessary electrical conduit components and nipples making sure that each piece is connected by a minimum of five threads. All electrical conduit connections must have at least five threads of engagement to be in compliance with the installation procedure.
7. Final tighten the mount for the VP1000 vacuum pump and also the hex locking nuts for the potted conduit assembly only after all the electrical conduit components have been correctly installed according to NFPA codes.
8. Pull the excess wire from the potted conduit and the vacuum pump through to the explosion proof junction box as required.
9. After the electrical conduit connections are completed and the wiring has been pulled into and through the explosion proof junction box the excess wire can be measured and cut. The length of the wires should allow for stripping and a wire nut connection for each wire (approximately 6"). The wires from the potted conduit and the vacuum pump are color coded and should be connected like for like.

Installing the MC100 Control Module

Overview

The MC100 control module is universal to all Healy VP1000 installations. The unit can accept up to four individual signals from each side of the dispenser and is designed to perform these specific functions:

- To accept a constant 120 Volt AC power supply from the dispenser.
- To supply a constant 120 Volt AC power supply to the VP1000 vacuum pump.
- To receive a separate signal from each side of a dispenser for authorization to dispense. Solenoid valves are most commonly used but any signal of 5 volts or above (AC or DC) will be accepted by the MC100.
- To send a low volt DC signal to the VP1000 vacuum pump to begin operation and to send a second low volt DC signal if the dispenser has both sides authorized to dispense simultaneously.
- To disable the dispenser if the vacuum pump is not operating properly.

Mounting the MC100 Control Module

The MC100 control module is mounted in the electronics area of the dispenser. If the dispenser is a mechanical type with no vapor barrier the module must be located in a suitable “UL listed” explosion proof J-box.

The mounting location must be easily accessible to a service technician. The control module contains diagnostic LED lights and a power reset needed to service the system.

1. Identify the wire harness / control module part number to be installed. (See the Dispenser Models section in this manual)
2. The MC100 Control Module must be mounted to the inner framework of the dispenser following all applicable installation codes.
3. The MC100 Control Module is used with all wire harnesses described in the Dispenser Models chapter in this manual.
   - The 1360A module / wire harness includes 3M ScotchLok wire connectors to interface with the dispensers existing solenoid wiring.
   - All other dispenser specific wire harnesses use mating plug connectors. (See the Dispenser Models chapter in this manual)

Dispenser Specific Wire Harness Installation

1. Locate the solenoid valve control board used to supply power to the product solenoid valves.
2. Locate the plug connector or connectors that supply power or signals from the solenoid valve control board to the individual solenoid valves.
3. Remove the existing connection between the solenoid valve control board and the solenoid wire connecting plug(s).
4. Some dispensers will have separate solenoid valve connection points on the solenoid valve control board. The Healy control module wire harness for these dispensers will also be separated. Channel 1 input harness connects to the “A” side of the solenoid valve control board. Channel 2 input harness connects to the “B” side of the solenoid valve control board.
5. Plug the cable connector(s) from the Healy Control Module into the mating connector(s) located on the solenoid valve control board. Do not force the connection. The connector installed on the Healy Control Module should match the original connector removed from the solenoid valve control board.
6. The Healy wire harness is now connected at the solenoid valve control board. Be sure the plug connector(s) have properly locked into place ensuring a tight connection.
7. Plug the previously removed solenoid wire connecting plug(s) into the mating connection on the Healy control module wire harness. This step will complete the dispenser interface wiring to the Healy Module.

AC Power to the module

1. The MC100 Module requires a constant 120vac - 2 amp power source from the dispenser. The power should be supplied from the main power strip or accessory connections capable of sustaining a 2 amp load.
2. Using a 3M ScotchLok supplied with the 1360A Module assembly, connect the factory installed black & white twisted pair on the MC100 Module to the black and white (power & neutral) from the main power source or accessory connection of the dispenser.

Shown below are the Dispenser Specific Interface Wire Harnesses listed in the Dispenser Models chapter of this manual.

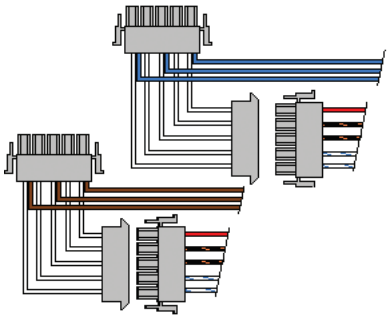

1354 Wayne & DL Non-Blender

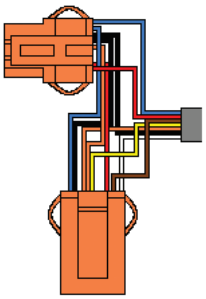

1363 Wayne 1V & 2V Blender

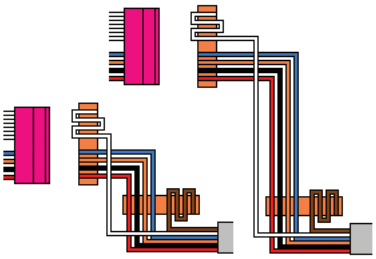

1368 Early Gilbarco Encore 300 Blender

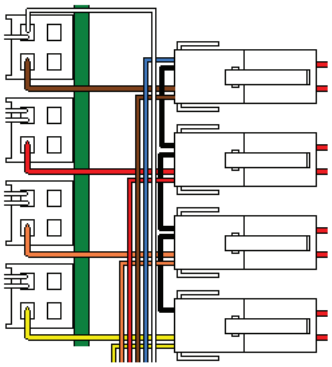

1362 Tokheim Premier C Blender

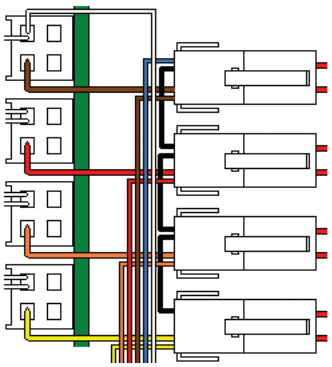

1372 Early Tokheim Blender

Generic Dispenser Wire Harness Installation - 1360A

The 1360A Generic Wire Harness/Control Module is universal and can be installed in any dispenser or suction pump.

Description	Quantity
MC100 Control Module	1
Wire Nuts Red	4
Wire Nuts Orange	2
ScotchLok Red	13
12' Brown #16 Wire	1
12' Blue #16 Wire	1

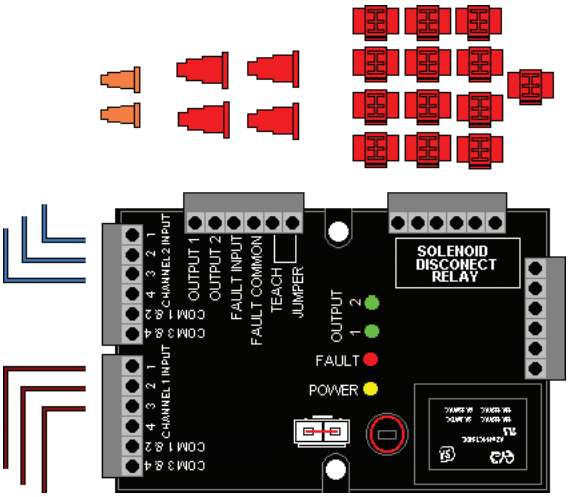

Note: Solenoid valves that supply diesel do not connect to the MC100 Control Module.

1. Locate the solenoid valve board that controls the signals (AC or DC) entering or exiting the product solenoid valves.
2. Locate the dispenser wire harness that carries the signals from the solenoid valve control to the individual solenoid valves on each side of the dispenser.

A Side

3. Starting on the “A” side of the dispenser and using a multi-Oeter, determine which harness wire is carrying the voltage signal to the “A” side – grade 1 solenoid valve.
4. If a solenoid valve assembly has more than one signal wire, the signal wire that is first energized and remains energized throughout the fueling is labeled.
5. Each individual solenoid valve signal wire supplying the “A” side of the dispenser must be located and labeled; for example: A grade 1, A grade 2, A grade 3.
6. Loosely place a 3M ScotchLok onto the first signal wire (“A grade 1”) then measure and cut the appropriate length of blue wire supplied with the 1360A module assembly. One end of the blue wire is placed in the Scotchlok connector and fastened to the signal wire. The other end is stripped and placed into the Channel 1 Input / Position 1 of the MC100 Control Module.
7. Repeat Step 6 for the next solenoid valve and all remaining valves that supply the “A” side of the dispenser. Attach each of the “piggy-back” signal wires separately into the next available position(s) 2,3,4 on the Channel 1 Input side of the MC100 Module.

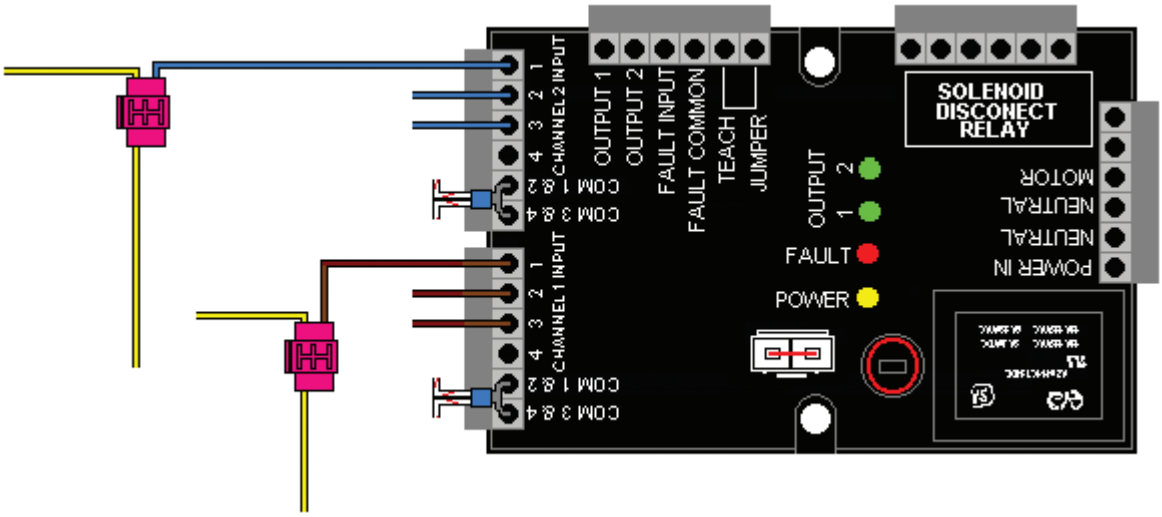

Attaching the Voltage Signal Wire(s) to the MC100 Control Module

B Side

8. Repeat steps 3-7 for the “B” side solenoid valve signal wires using the Channel 2 Input side of the MC100 Module.
9. Each and every product solenoid valve supplying gasoline to the nozzles should have a voltage signal “piggy-back” wire installed terminating at the MC100 Module.
   - “A” side valves to Input CH 1 – 1,2,3,4
   - “B” side valves to Input CH 2 – 1,2,3,4

Solenoid Disconnect Relay Wiring (1360A only)

10. Factory installed on the 1360A module / harness, the red & white “jumper” wire has two separate wire leads and is attached at four locations on the module: CH 1 Com 1,2,3,4; CH 2 Com 1,2,3,4; and the “Solenoid Disconnect Relay” position 1 & 6.
11. The red & white “jumper” wire leads are connected to the neutral or common wiring for the solenoid valves. This jumper allows the module to reference the signal voltage from an authorized solenoid valve and also have the ability to disable the dispenser solenoids using the solenoid disconnect relay if the vacuum pump is not working properly.
12. To connect the jumper properly, locate the neutral or common wire that is associated with the control of the dispenser solenoid valves, this wire will be cut and each end separated and attached by a wire nut to the red & white “jumper” wire that has been factory installed on the MC100 Module.

AC Power to the module

13. The MC100 Module requires a constant 120vac - 2 amp power source from the dispenser. The power should be supplied from the main power strip or accessory connections capable of sustaining a 2 amp load.
14. Using a 3M ScotchLok supplied with the 1360A Module assembly, connect the factory installed black & white twisted pair on the MC100 Module to the black and white (power & neutral) from the main power strip or accessory connection of the dispenser.

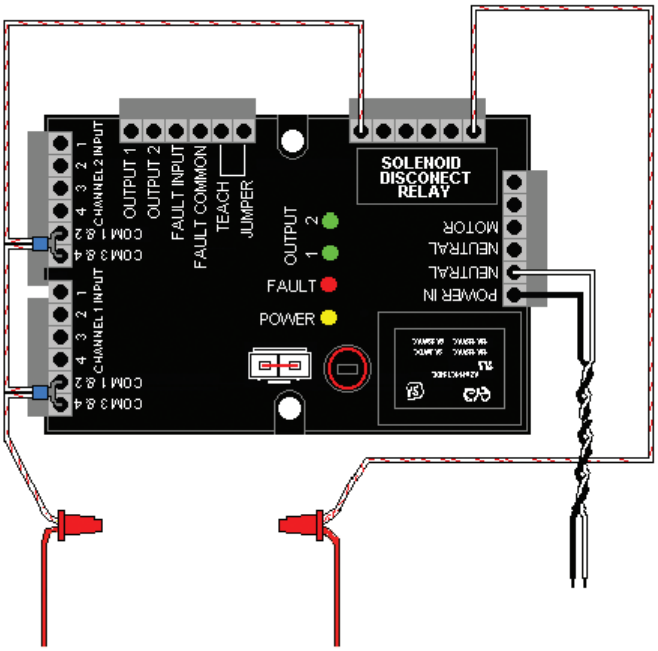

Solenoid Valve Neutral Wire Interrupt

Note: The neutral wire color (AC valves) will typically be red, but may be a different color depending on solenoid type.

1316 Potted Conduit Wiring

1. The power and signal wires that operate the VP1000 Vacuum Pump originate at the MC100 Control Module. These wires connect the module to the explosion proof junction box through the 1316 potted conduit assembly previously installed in the “Mounting the Vacuum Pump & Electrical Conduit Assembly” section of this manual.
2. Cut the wires from the 1316 potted conduit assembly an appropriate length to reach the MC100 Control Module terminal blocks, strip each wire end 1/2 inch.
3. Connect the low voltage (DC) signal wires:
   - Begin with one RED wire (either) and connect to OUTPUT 1 on the terminal block.
   - Connect the second RED wire to the OUTPUT 2 on the terminal block.
   - Connect the PURPLE wire to the FAULT INPUT on the terminal block.
   - Connect the ORANGE wire to the FAULT COMMON on the terminal block.
4. Connect the high voltage (AC) power wires:
   - Connect the WHITE wire to the NEUTRAL position on the AC terminal block.
   - Connect the BLACK wire to the MOTOR position on the AC terminal block.
   - Connect the GREEN/YELLOW wire to chassis ground.

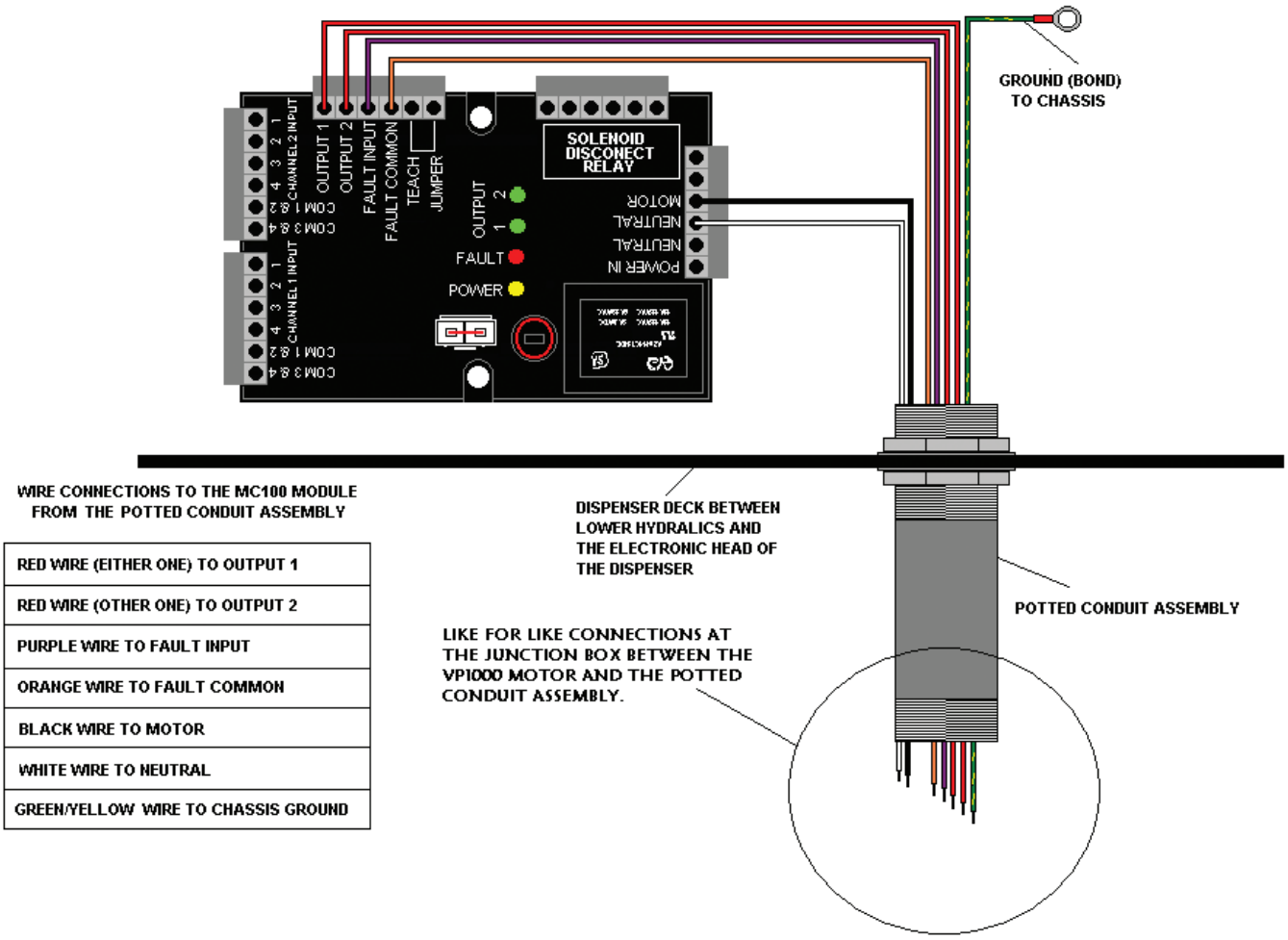

WIRE CONNECTIONS TO THE MC100 MODULE FROM THE POTTED CONDUIT ASSEMBLY

RED WIRE (EITHER ONE) TO OUTPUT 1
RED WIRE (OTHER ONE) TO OUTPUT 2
PURPLE WIRE TO FAULT INPUT
ORANGE WIRE TO FAULT COMMON
BLACK WIRE TO MOTOR
WHITE WIRE TO NEUTRAL
GREEN/YELLOW WIRE TO CHASSIS GROUND

Installing Dispensing Hanging Hardware

Dispensing Hanging Hardware is defined as the connecting point on a dispenser where the Healy System Hose Assembly or the Healy System Hose Adapter connects to the original dispenser product outlet.

Installing Dispensing Equipment

1. Completing the connection of Healy Systems dispensing equipment requires the installation of Healy Systems Phase II dispenser adapters, hoses and nozzles (Hanging Hardware). So, if applicable, remove existing non-Healy hanging hardware (from the dispenser product outlet adapter to, and including, the nozzles).
2. Vapor ready dispensers will require a Healy Systems adapter to make the hose threads compatible with other Healy Systems equipment. Install the adapter according to the instructions that come with it. Various adapters are available, depending on how the dispenser is configured: M34 metric (Healy designation F3 or S3) or balance ready (Healy designation S4).
3. Healy Vapor Recovery Hoses are available in various lengths to satisfy local ordinances and still provide “far side” fueling capability. Install Healy Vapor Recovery Hoses according to the instructions contained with the product in the shipping box.
4. Breakaways are required; install either a model 8701VV Breakaway or a model 807 Swivel Breakaway. Install the breakaway using the instructions supplied with the unit.
5. The Healy Systems nozzle Model 900 (EVR) series is the only nozzle necessary to complete the upgrade. Check to be sure that the nozzle hanger is mounted in the highest position. Check for proper fit in the nozzle holster and that the nozzle can be locked in the off position. Also be sure that when the nozzle is locked, the dispenser cannot be activated from the locked position.

Hose Adapters[1]

- Used for “Non-Vapor Ready” Commercial Dispensers Only (Universal)
- Dispensers containing existing “VacAssist” or “Balance” Stage II piping DO NOT use these adapters.

CX6-A

Non-Vapor Ready, Standard Low Hose Dispensers

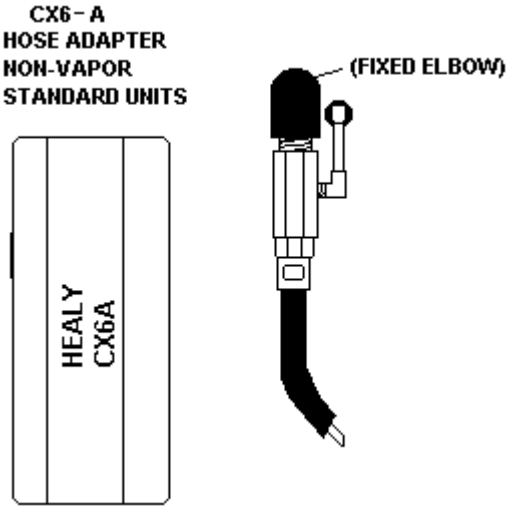

The Vapor Kits listed below are for use with CX6-A hose adapters

Model	Description
Vapor Kit Z008	Standard low hose / Single hose dispenser
Vapor Kit Z009	Standard low hose / Dual hose dispenser

[1] A complete list of dispenser conversion adaptors manufactured by Franklin Fueling Systems is listed in Exhibit 1. The use of dispenser conversion adaptors not listed in Exhibit 1 may be used to facilitate installation provided that all applicable performance standards are met.

Testing the System

1. Carefully review all work completed, making sure that all mechanical joints are thoroughly tightened and that all electrical connections are sealed.
2. Open the product crash valves and restore power to the dispenser.
3. With the power on, but no nozzles authorized, the VP1000 should not be running (unless the ambient temperature is below 40°F), but the power LED (yellow) should be energized on the interface module.
4. Authorize one handle and the vacuum system should activate when the gasoline flow control valve is engaged. Repeat for all other nozzles, individually testing each nozzle on each side of dispenser. With each authorization, one of the green LED's on the interface module should illuminate and the VP1000 activate.

Note: For unihose dispensers, conduct individual tests for each product grade on each side of the dispener to ensure that the same LED activates for all grades on the same side. If the other LED activates, wiring needs to be corrected.

5. Authorize one nozzle and listen to the speed of the VP1000. With only one nozzle activated, the speed will be slower than if a nozzle on each side is activated. Activate a nozzle on the other side of the dispenser and listen for the speed to change.
6. To test the tightness of the vapor plumbing installed on the suction side of the system requires a 0-100" water column gauge. Connect the gauge into the 1/4" test port of the adaptor tee installed earlier (see Figures 6 and 7 for reference on test port installation and location) . Continue by following and completing the START-UP / NEW INSTALLATION / WARRANTY / ANNUAL TESTING FORM.

Troubleshooting the VP1000

Important: Use extreme care and caution when performing the tests listed below. If 120 VAC is accidentally applied to the fault or DC terminals, the module will be destroyed.

- With power applied to the dispenser, but no products authorized, there should be 120 VAC between neutral and 120 VAC on the module terminal strip.
- As above, with any product authorized, there should be single speed power applied to the VP1000.
  - Verify this by checking for 2-3 VDC from OUTPUT 1 (RED WIRE) to FAULT COMMON (ORANGE WIRE), (or from OUTPUT 2 TO FAULT COMMON) also; one GREEN LED should be illuminated. With a second product authorized on the opposite side of the dispenser i.e. one product on each side, the motor should operate at higher speed and there should be 2-3 VDC on both output 1 and 2 (to fault common) and both GREEN LED's should be illuminated.
- With the pump running, a fault can be simulated by shorting, with a jumper wire, the "FAULT INPUT" (purple wire) to FAULT COMMON (orange). This should cause the motor to shut off, the solenoid valves to lose power and the dispenser to shut down. As long as the short is maintained, the red LED will be illuminated. Removing the short will not automatically reset the module. To reset the module, remove the short, remove power to the dispenser for fifteen seconds and restore power. The switch (some models) or jumper plug on the module will also disconnect the power as long as it is held over or removed for 15 seconds, the module should be reset and the LED extinguished. If removing the jumper plug, be sure that there are no hazardous vapors present.
- If diagnosing a problem where the LED is already illuminated, a steady light indicates a low current condition, therefore expect a vane or rotor problem. If the LED is blinking, that indicates a high current condition and would expect to find a jammed rotor or vapor line flooded with product.
- The electronics of the motor will make three attempts to have a successful start of the motor. If it detects a problem, on the fourth unsuccessful start, it will short the fault line to signal minus (DC-) and shut down the electronics.

VP1000 Vane & Rotor Service & Replacement Guide

Caution **Disconnect power before beginning service.**

1. The work area **must** be clean and have sufficient lighting.
2. Disconnect the vapor piping connected to the **IN** and **OUT** ports of the VP1000 cover assembly.
3. Remove the four Allen head screws and lock washers that secure the pump cover assembly to the pump housing and remove the cover carefully.

Caution **Use a spill cloth when removing the cover, as there may be some gasoline inside the pump cavity**.

4. Carefully turn the rotor assembly by hand until the shaft key notch is at the 12 o'clock position. (See Figures)
5. Remove the rotor, vanes and shaft key from the pump housing.

Note: Place your hand or a container under the rotor while removing. Do not use any sharp objects that would scratch the surfaces of the pump cavity, pump shaft, rotor, or vanes.

6. Rotate the shaft by hand. If the shaft does not rotate freely, the entire vacuum pump needs replacement (p/n VP1000-5 or RVP1000-5).
7. If the rotor and vanes are cracked, chipped, excessively worn or excessively dirty, the rotor and vanes should be replaced because cleaning will not remedy these conditions (p/n VP1000VRC-G, VP1000VRC-P or VP1000VRC).
8. If there is no visible damage, use a lint-free cloth with isopropyl alcohol to clean the rotor and vanes.
9. Using a lint-free cloth with isopropyl alcohol, thoroughly clean: the inside of the pump ring and rear of the pump cavity, the rotor shaft, and the inside of the pump cover.
10. Reposition the shaft (if necessary) so that the shaft key notch is in the 12 o'clock position. Install the cleaned original or new shaft key onto the shaft.
11. Carefully install the cleaned original or new rotor onto the shaft followed by the cleaned original or new vanes into the rotor.

Note: The rotor assembly should slide on to the shaft easily, without excessive force. (Rotors and vanes are reversible)

12. Lightly lubricate and install the new O-Ring for the pump housing.

Note: Do not allow any lubricant to get inside the pump housing.

13. Install the pump cover using the four Allen head screws and lock washers removed in step 3 and cross tighten.

Note: Use caution when sliding the pump cover over the O-Ring seal to prevent cutting or tearing.

14. Re-connect the vapor piping to the **IN** and **OUT** ports of the pump cover assembly that was removed in Step 2.
15. Re-apply power. Test for normal operation. (See VP1000 Vacuum Performance Test Procedure)

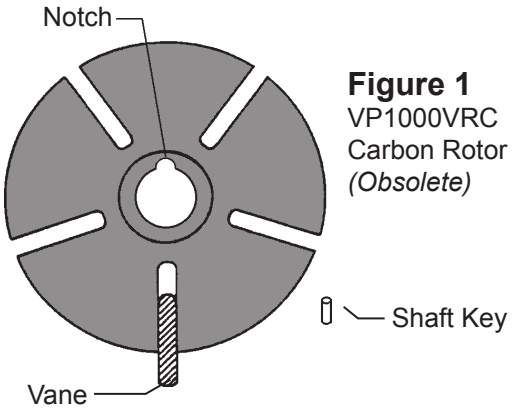

Figure 1
VP1000VRC
Carbon Rotor
(Obsolete)

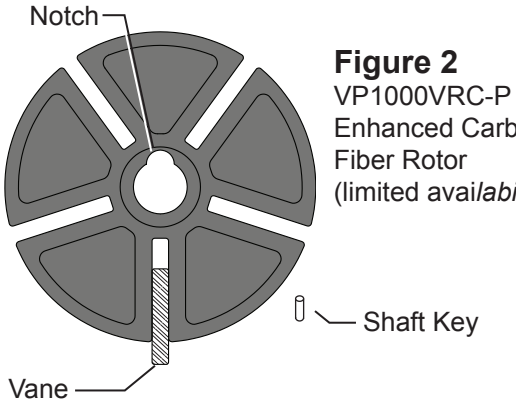

Figure 2
VP1000VRC-P
Enhanced Carbon
Fiber Rotor
(limited avai*lability)*

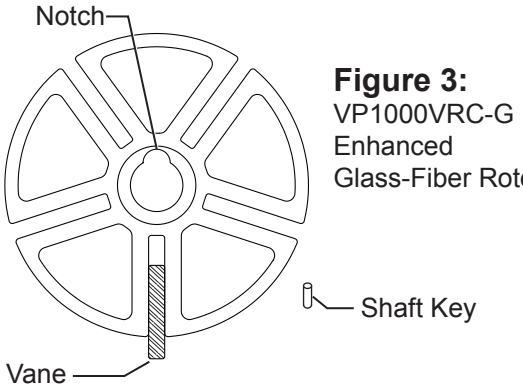

Figure 3:
VP1000VRC-G
Enhanced
Glass-Fiber Rotor

START-UP/NEW INSTALLATION/ WARRANTY/ ANNUAL TESTING FORM (Rev. 10/07)
HEALY VP1000 VACUUM PUMP

Date_____

BOTH SIDES OF THIS TEST FORM MUST BE COMPLETED FOR NEW INSTALLATIONS

- **Start-up / New installations – complete SIDE A and sections 3, 4, 5 and 6 of SIDE B. Submit forms to Healy Systems.**
- **Warranty Service or Annual Testing – complete contact information, dispenser make, vacuum pump serial # and the tests in sections 1 and 2 on SIDE A and conduct the appropriate tests specified on SIDE B. Submit Forms to Healy Systems.**

SERVICE COMPANY NAME	TELEPHONE	
SERVICE TECHNICIAN	HEALY TECH CERT #	
STATION ADDRESS	CITY	STATE
DISPENSER MAKE	**VACUUM PUMP SERIAL #**	

SIDE A

DISPENSER EQUIPMENT CHECKLIST - Parts A-1 and A-2		**YES**	**NO***
A-1	Is all the installed dispenser hanging hardware listed in Exhibit 1 of Executive Order VR-201 or VR-202?		
A-2	Proper installation of the VP1000 requires the test port and ball valve on the inlet side of the vacuum pump. Are the test port and ball valve installed correctly?		
	***If the answer to either A-1 or A-2 is NO, the Healy Warranty is Void.**		

A-3

- THE FOLLOWING TEST WILL PERFORM A POSITIVE PRESSURE LEAK CHECK OF THE VACUUM PUMP, DISPENSER VAPOR PIPING, HANGING HARDWARE AND ALL NOZZLES ON BOTH SIDES OF THE DISPENSER.
- THE VP1000 OUTLET IS NOT CONNECTED TO UNDERGROUND PIPING DURING THIS TEST.

CAUTION: REGULATE GASEOUS NITROGEN TO 2.5 PSI (~70" WC) MAXIMUM BEFORE TESTING

1. Install a 0-100 inch water column (" wc) mechanical gauge at the VP1000 test port.
2. Use the water column gage positive (high) pressure port.
3. Gaseous nitrogen gas can now be connected to the outlet (exhaust) port of the VP1000.
4. Test pressure **cannot** exceed 70" wc.
5. **Slowly** introduce the gaseous nitrogen to a pressure between 60 – 70" wc.
6. After reaching the pressure range, close the valve supplying the gaseous nitrogen.
7. Record the initial pressure reading on the gauge - observe and record the final pressure reading after 60 seconds.
8. Leaks must be repaired when the pressure falls more than 4" wc in 60 seconds.
9. Retest until all leaks have been repaired.
10. Record test results in Section A-4.

A-4 **PRESSURE TEST** **2.5 PSI (~70"wc) Maximum**	**Initial Pressure test reading ("wc)**	**Pressure test reading after 60 seconds ("wc)**

START-UP/NEW INSTALLATION/ WARRANTY/ ANNUAL TESTING FORM (Rev. 10/07)
HEALY VP1000 VACUUM PUMP

Date_____

BOTH SIDES OF THIS TEST FORM MUST BE COMPLETED FOR NEW INSTALLATIONS

- **Start-up / New installations – complete SIDE A and sections 3, 4, 5 and 6 of SIDE B. Submit forms to Healy Systems.**
- **Warranty Service or Annual Testing – complete contact information, dispenser make, vacuum pump serial # and the tests in sections 1 and 2 on SIDE A and conduct the appropriate tests specified on SIDE B. Submit Forms to Healy Systems.**

SIDE B

Warranty Service Complete Troubleshooting Sections **B-1 and B-2**	*Start-up/ New Installations/ Annual Testing* Complete Sections **B-3 through B-6**

B-1

Control Module Fault Light

(Circle one) Flashing (LED) Steady (LED)

1. All fault conditions require removal and cleaning or replacement of the rotor and vanes located inside the vacuum pumps round front cover assembly. Use the **VP1000 ROTOR & VANE SERVICE AND REPLACEMENT GUIDE** in the applicable dispenser retrofit manual of the ARB Approved Installation, Operation and Maintenance Manual for Executive Orders VR-201-O and VR-202-O.
2. Clean all surfaces including vanes, rotor, rotor housing and cover assembly.
3. Manually spin and inspect the motor shaft for bearing wear before re-installing the rotor kit.
4. Replace motor when bearings or shaft are damaged or worn.
5. Check O-ring seal before replacing rotor cover assembly.

B-2

Re-Assemble / Reset Vacuum Pump and Module. (Power must be removed from both the vacuum pump and the **module for 20 seconds to reset the system**) using the power reset switch on the MC100 module.

B-3

Dispenser Vapor Line Integrity Test

1. Install 0-100 inch water column (“ wc) vacuum mechanical gauge at the VP1000 test port.
2. Authorize the dispenser for fueling. The VP1000 will begin to run.
3. Close the ball valve at the pump inlet.
4. Record the initial vacuum reading on the gauge – observe and record the final vacuum reading after 60 seconds.
5. Open the ball valve at the pump inlet.
6. Leaks must be repaired when the vacuum reading falls more than 4” wc in 60 seconds.
7. Retest until all leaks have been repaired.
8. Record data in Section B-4.

Note: If the initial vacuum reading is less than 60” wc, it could indicate a problem with the VP1000. Remove the dispenser from service. Use the troubleshooting section of the manual to investigate problem or contact the FFS Technical Help Desk at 800-984-6266 for assistance.

B-4

VACUUM TEST Using VP1000 as vacuum source	Initial Vacuum test reading (“ wc)	Vacuum test reading after 60 sec. (“ wc)

B-5

Dispenser Vaacuum Test

With one side of the dispenser authorized (VP1000 running) and the ball valve at the pump inlet open, dispense in handheld position a minimum of 0.5 gallons of fuel into a vehicle or test tank. Record the vacuum level while dispensing. Repeat test for the other side of the dispenser.

1. Side “A” Dispensing Vacuum _____” wc
2. Side “B” Dispensing Vacuum _____” wc

Note: If the dispensing vacuum is less than 60” wc, remove the dispenser from service. See the troubleshooting section of the manual or contact FFS Technical Help Desk at 800-984-6266 for assistance.

B-6

Audible Increase Test

Test the VP1000 Vacuum Pump for normal operation. Use the 6 step procedure titled, “Testing the VP1000 Vacuum Pump for normal operation using the following test procedure:” in Section 1.1 (Weekly Inspection and Testing) of the Healy Systems Scheduled Maintenance document in the ARB Approved Installation, Operation and Maintenance Manual for the Healy Phase II EVR System not Including ISD. This is to verify that the pump recognizes when both sides of the dispenser are activated for fueling.

Does the VP1000 Vacuum Pump change speeds (audible increase) when both sides are activated for fueling?

Yes No

If the answer is no, **use the troubleshooting section of the manual to investigate problem or contact the FFS Technical Help Desk at 800-984-6266 for assistance.**

Repairs - Comments	To Obtain Returned Materials Authorization number (RMA#) Call 800-984-6266 Forms can be faxed to Franklin Fueling Systems Customer Service at 800-225-9787

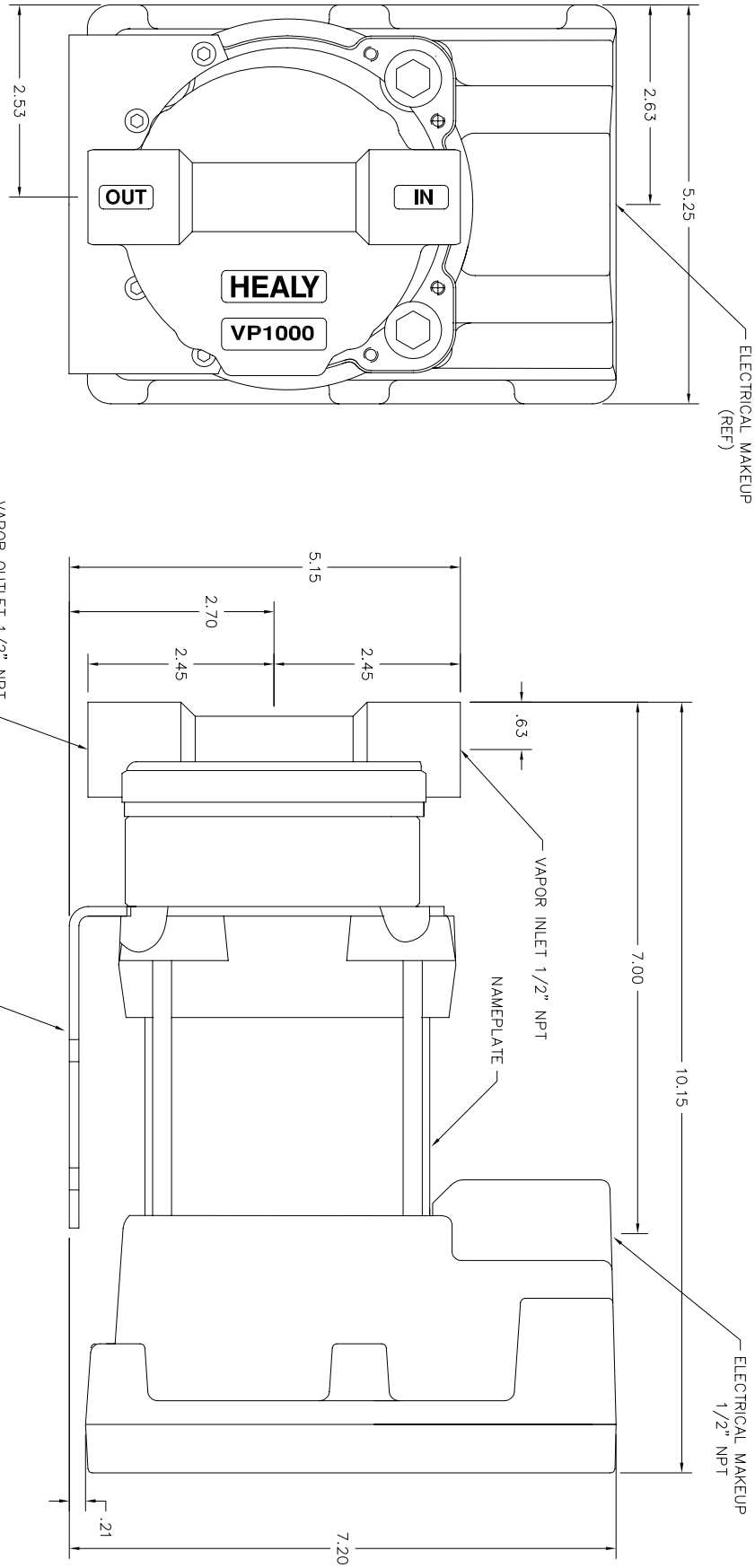

NOTE: ALL DIMENSIONS ARE APPROXIMATE AND REFERENCE ONLY.

HEALY
Franklin Fueling Systems
18 Hampshire Drive
Hudson, NH 03051, U.S.A.
Tel: +1 603 882-2472
www.franklinfueling.com