# Exhibit 5
# VAPOR TO LIQUID VOLUME RATIO
(Healy Model 900 EVR Nozzle)

Definitions common to all certification and test procedures are in:

**D-200 Definitions for Vapor Recovery Procedures**

For the purpose of this procedure, the term “ARB” refers to the California Air Resources Board, and the term “Executive Officer” refers to the ARB Executive Officer, or his or her authorized representative or designate.

## 1. PURPOSE AND APPLICABILITY

**1.1** This test procedure is used to quantify the Vapor to Liquid (V/L) Volumetric Ratio of the Healy Model 900 EVR Nozzle installed at gasoline dispensing facilities (GDF). This procedure provides a method to determine compliance with the V/L requirements specified in ARB Executive Orders (EO) VR-201 and VR-202.

## 2. PRINCIPLE AND SUMMARY OF TEST PROCEDURE

**2.1** A tight fitting adaptor is placed on the spout of a dispensing nozzle. The adaptor, which isolates vapor flow to the nozzle vapor collection ports, is connected to a volume gas meter. Gasoline is dispensed through the nozzle and the volume of vapors drawn through the vapor collection boot by the Phase II system vacuum pump is measured. The volume of vapor is recorded and compared with the volume of gasoline dispensed to determine the V/L Volumetric Ratio.

**2.2** The test is conducted with the pressure/vacuum (P/V) vent valve(s) installed on the storage tank vent pipes.

**2.3** The test procedure requires no modifications to the GDF being evaluated.

**2.4** The test procedure may be conducted on a fueling point on one side of the dispenser with the other side of the dispenser either authorized to dispense fuel (but not dispensing), or with the other side dispensing fuel into a vehicle or another portable test tank. Conducting the test this way will be evaluating the V/L of the fueling point with the VP1000 vacuum pump running on its high speed setting.

## 3. BIASES AND INTERFERENCES

**3.1** Nozzle spouts that are damaged such that the V/L adaptor cannot fit over the nozzle spout preclude the use of this test.

**3.2** Refueling points not capable of achieving dispensing rates (see Equation 9-2) required for conducting the V/L test, as specified in Exhibit 2 of ARB Executive Orders VR-201-P and VR-202-P, preclude the use of this test for determining in-use compliance of certified systems.

**3.3** Bagging, or otherwise sealing any nozzle associated with the vacuum pump serving the nozzle being tested, may bias the test results towards compliance. **The V/L test to verify compliance shall be conducted without "bagging" any of the nozzles served by a common vacuum device.**

**3.4** If the nozzle being tested introduces liquid into the V/L adaptor, gas volume meter or the adaptor supply hose, the V/L of that nozzle shall be deemed a failure of the V/L standard.

**3.5** Do not drain or remove liquid in either the vapor passage of the hoses or the dispenser vapor piping prior to performing the test. Draining of this liquid gasoline will bias the test toward compliance.

**3.6** The O-ring in the V/L adaptor that is not properly lubricated may bias the results toward noncompliance. See Section 5.7 for lubrication requirements. Motor oil (any weight) is acceptable for lubricating the O-ring. Contact Healy Technical Services with any questions about other lubricants that may be used in conducting this test.

**3.7** Conducting V/L testing with an improperly conditioned portable test tank (not saturated with gasoline vapors) will bias the test results of the as found V/L of the fueling point. Refer to Section 6.6 for proper portable test tank conditioning.

## 4. SENSITIVITY, RANGE, AND ACCURACY

**4.1** The maximum rated capacity of the gas volume meter shall be at least 800 CFH and not greater than 3,000 CFH.

**4.2** The minimum rated capacity of the gas volume meter shall be 25 CFH.

**4.3** The minimum readability of the gas volume meter shall be 0.01 cubic feet.

**4.4** Accuracy, determined during calibration, will be ± 5 percent of the gas volume meter reading.

## 5. EQUIPMENT

### 5.1 Vapor to Liquid Adaptor and Surrogate Spout

A **Vapor to Liquid Adaptor**. Only the Healy Systems, Inc. V/L Test Sleeve (Figures 5-1, 5-4 and 5-5), Part No. 8034-1, can be used to conduct V/L testing on the Assist Phase II EVR System (Executive Order VR-201 series or Executive Order VR-202 series). The nominal inside diameter of the flexible tubing shall be between 0.75 and 1.00 inches, and the length of the tubing shall be between 3.0 and 6.0 feet.

B **Surrogate Spout**. Only the Healy Systems, Inc. V/L Surrogate Spout (Figures 5-1 and 5-5), Part No. 8175, can be used to conduct the pre-test and post-test leak check.

**5.2 Gas Volume Meter**. Use a gas volume meter to measure the volumetric flow rate through the V/L adaptor. The meter shall be equipped as shown in Figure 5-2 and the maximum allowable pressure drop(s) (determined by the manufacturer) across the meter shall be:

For a meter with a maximum rated capacity of 1000 CFH through 3,000 CFH:
1.10 inches $H_2O$ at a flowrate of 3,000 CFH
0.05 inches $H_2O$ at a flowrate of 30 CFH

For a meter with a maximum rated capacity of 800 to 1,000 CFH:
0.70 inches $H_2O$ at a flowrate of 800 CFH
0.04 inches $H_2O$ at a flowrate of 16 CFH

See Section 6.2 for further gas volume meter specifications.

**5.3 Volume Gas Meter Inlet Manifold**. This manifold is designed to return the vapors displaced from the portable gasoline tank assembly, at atmospheric pressure, to the inlet of the gas volume meter. This manifold shall be two (2.0) inches minimum inside diameter pipe. The intake passage of the manifold shall be no shorter than 6.0 inches and no longer than 18.0 inches. See Figures 5-2 and 5-4.

**FIGURE 5-1**
**Healy Vapor To Liquid (V/L) Adaptor and Surrogate Spout Assembly**

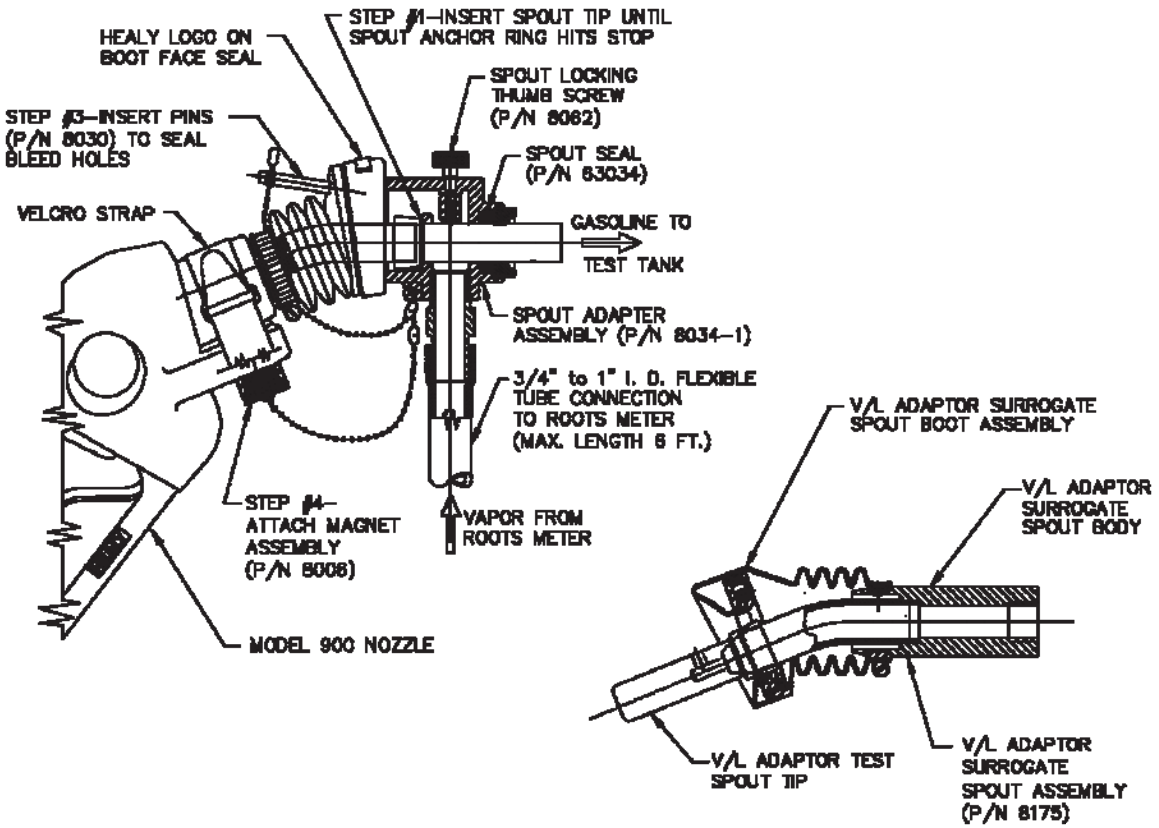


**NOTE: The thumbscrew and Healy logo on top of the nozzle boot face seal must be in vertical alignment to imitate fueling an unleaded vehicle.**

**FIGURE 5-2**
**Gas Volume Meter and Vapor To Liquid Adaptor**

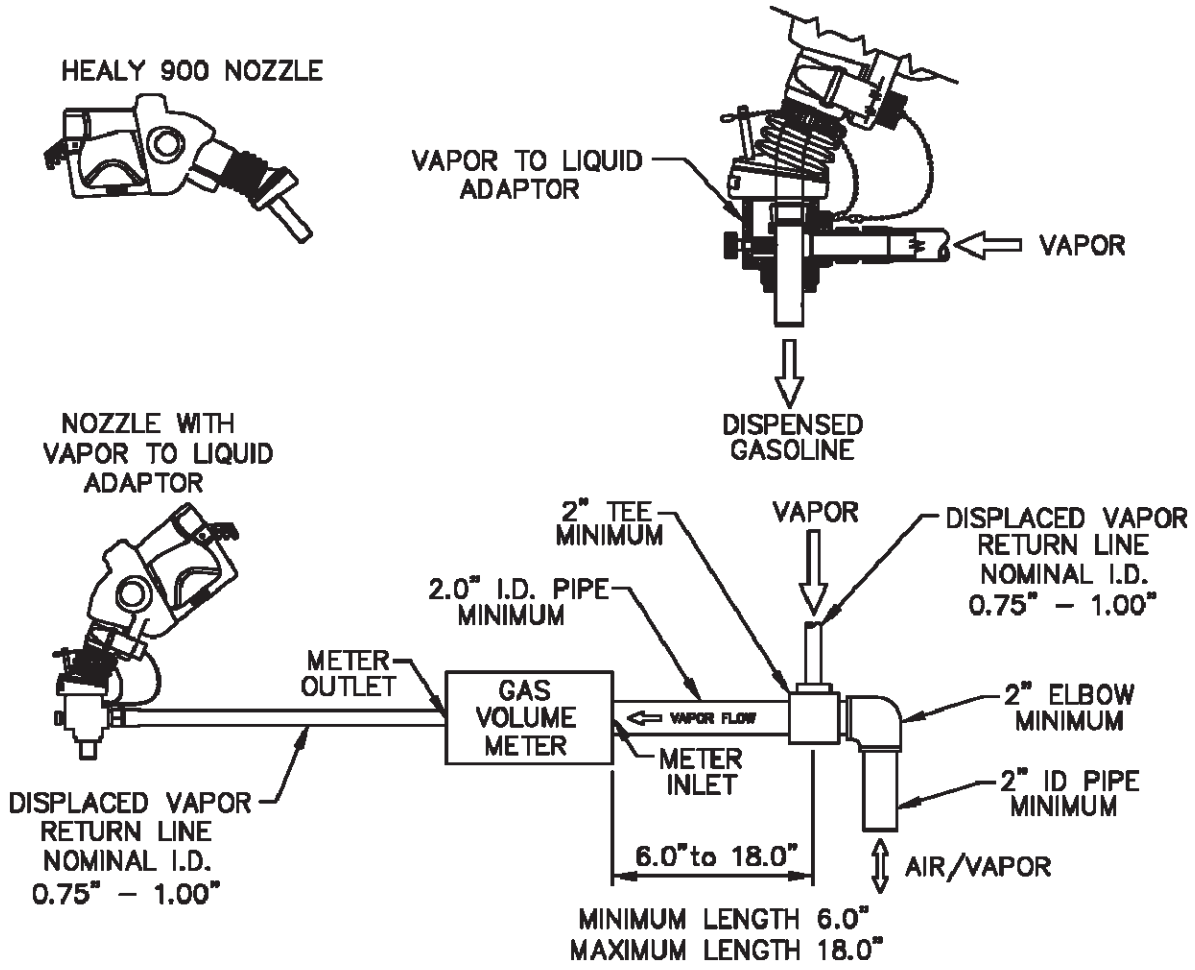

**5.4 Liquid Volume Meter**. Use the totalizer on the gasoline dispenser to measure the volume of gasoline dispensed during the test.

**5.5 Portable Gasoline Tank Assembly**. A portable tank, meeting fire safety requirements for use with gasoline, shall be used to receive the gasoline dispensed during this test. The tank shall have sufficient volume so that at least 4.5 gallons may be dispensed prior to activating the primary shutoff mechanism of the dispensing nozzle. Portable tanks shall have a permanent label or mark indicating the total fuel capacity in gallons. Tank material, likely to provide contact with the nozzle spout, or V/L adaptor, during the entire dispensing event, shall be constructed of aluminum or brass or other materials approved by the local fire codes for such application. The tank and required plumbing configuration is shown in Figure 5-3 and Figure 5-4. This configuration permits a portion of the vapors displaced during testing to be returned to the underground storage tank (UST). The minimum and maximum dimensions shown in Figure 5-2 and Figure 5-4 shall be adhered to in all cases.

**5.6 Stopwatch**. Use a stopwatch accurate to within 0.2 seconds.

**5.7 Lubricant**. Appropriate lubricant shall be used to ensure a leak-tight seal between the O-ring in the V/L adaptor and the nozzle spout. Motor oil (any weight) is acceptable for lubricating the O-ring. Contact Healy Technical Services with any questions about other lubricants that may be used in conducting this test.

**5.8 Leak Detection Solution**. Any liquid solution designed to detect gaseous leaks may be used to verify the pressure integrity of test equipment during this test.

**5.9 Pressure Measuring Device.** An electronic pressure measuring device with a full scale range that shall not exceed 0-10 inches WC with a minimum accuracy of 0.5 percent of full scale. A 0-20 inches WC device may be used provided the minimum accuracy is 0.25 percent of full-scale.

**FIGURE 5-3**
**Portable Tank Assembly**

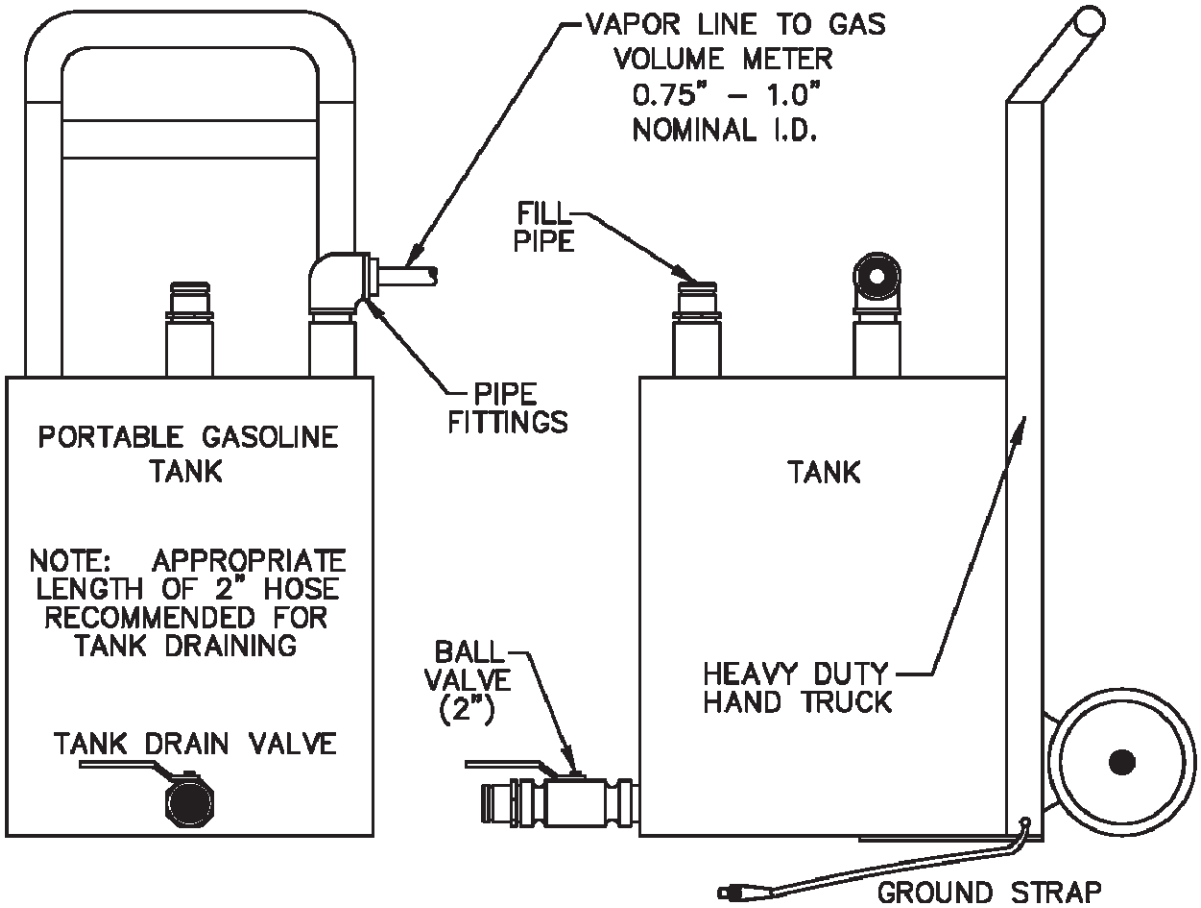

## 6. PRE-TEST PROCEDURES

**6.1** Assemble the portable tank assembly and gas volume meter as shown in Figure 5-4. The minimum and maximum dimensions shown in Figure 5-4 shall be adhered to in all cases. **Ensure that the ground strap is properly connected to an acceptable ground**.

Note: A one-time test to verify proper design of the tee connection at the gas volume meter shall be conducted. Disconnect the V/L adaptor from the nozzle. Insert the nozzle into the portable test tank so that there is no visible gap between the nozzle boot/portable test tank fill pipe interface. Dispense between four and one-half and five (4.5 - 5.0) gallons into the portable test tank. The tee connection design passes the test if the displacement on the gas volume meter is less than 0.01 cubic feet. The result of this test shall be kept with the test equipment. If the tee connection is altered or changed, the above test must be repeated to ensure proper design.

**6.2** The gas volume meter shall be calibrated, within 180 days prior to conducting this procedure. In addition, calibration shall be conducted after any repairs or alterations (changes to the operation or configuration of the meter) to the meter. Calibrations, at a minimum, shall be conducted at flowrates of 30, 60, and 90 CFH (3.7, 7.5, and 11.2 gallons/minute) in accordance with one of the following:

(a) ARB Air Monitoring Quality Assurance, Volume VI, Standard Operating Procedures for Stationary Source Emission Monitoring, January 1979, or

(b) US EPA Quality Assurance Handbook for Air Pollution Measurement Systems, Volume III, Stationary Source Specific Methods, or

(c) EPA Method 2A, Measurement of Gas Volume Through Pipes and Small Ducts (40 CFR Part 60, Appendix A), or

(d) Appropriate calibration procedures in accordance with California Department of Food and Agriculture, Division of Measurement Standards and County Department of Weights and Measures (title 4, CCR, section 3.33).

A copy of the most current calibration shall be kept with the meter.

**FIGURE 5-4**
**Assembled Vapor to Liquid Volume Ratio Test Equipment**

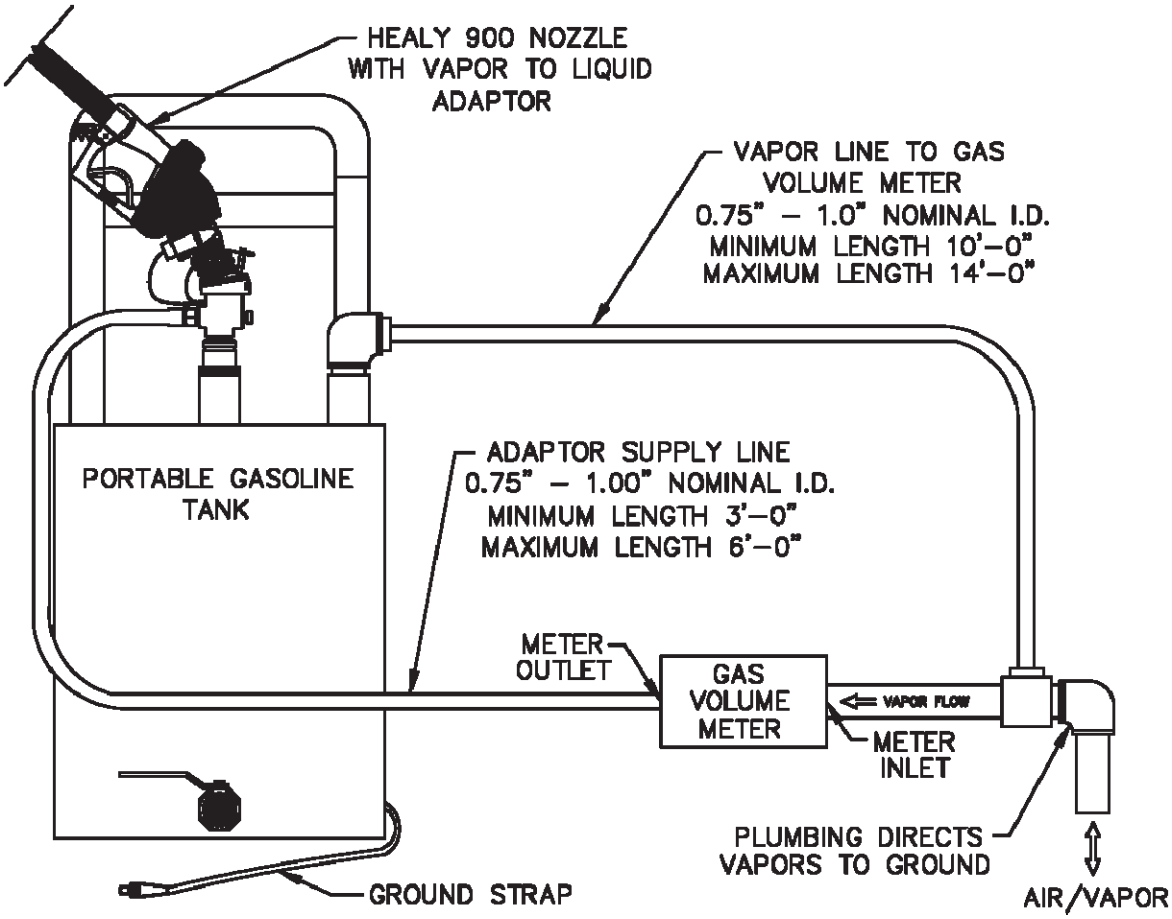

**6.3** Verify that the O-ring in the V/L adaptor is present and in good condition. An O-ring with nicks, tears, or other deformations shall be replaced prior to the test. The O-ring shall be properly lubricated (see Section 5.7) to ensure a vapor tight connection.

**6.4** Conduct a pre-test leak check of the V/L adaptor, the gas volume meter and the adaptor supply hose by connecting the V/L adaptor to a surrogate spout as shown in Figure 5-5 and described in Section 5.1B. Raise the test pressure to 5.00” ± 0.50” WC. There shall not be a pressure drop of more than 1.00” WC from the above starting pressure for 30 seconds from the start of the test. If the leak test passes, proceed with the V/L testing. If the leak test fails, proceed to isolate the source of the leak by pressurizing the test equipment again. Squirt liquid leak detector solution on interfaces and other potential leak sources and watch for the formation of bubbles. Once leak(s) are repaired, repeat the leak test procedure.

**Note:** Leak checks shall be conducted in a shaded area or away from direct sunlight. Leak checks may be conducted during V/L testing to ensure leak integrity of test equipment.

**6.5** This test procedure shall be conducted with the storage tank pressure/vacuum (P/V) valve(s) installed and the Phase I vapor coupler(s) poppet(s) in the closed position with the adaptor dust cap(s) installed.

**6.6** With the portable tank and V/L test equipment assembled, dispense gasoline into the portable test tank until at least 10% of the tanks total capacity has been reached. This will condition the portable tank with gasoline vapors. This conditioning shall be conducted each time the test tank is emptied prior to conducting testing at each facility.

**6.7** All pressure measuring device(s) shall be bench calibrated using a reference gauge, incline manometer or NIST traceable standard at least once every six (6) months. Calibration shall be performed at 20, 50, and 80 percent of full scale. Accuracy shall be within five (5) percent at each of these calibration points.

**FIGURE 5-5**
**Vapor To Liquid Adaptor and Gas Volume Meter Leak Test Assembly**

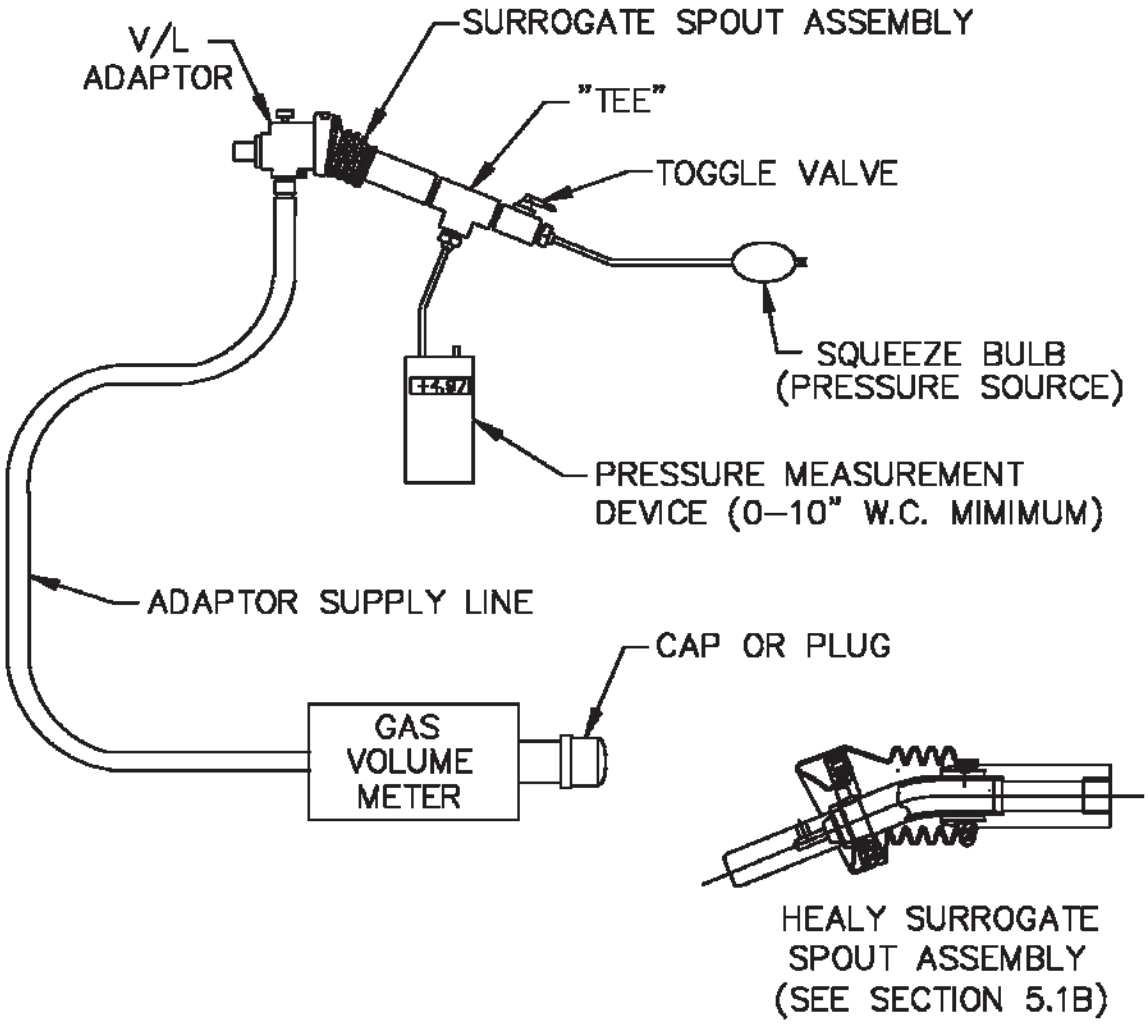

## 7. TEST PROCEDURES

**7.1** Carefully connect the V/L adaptor to the nozzle spout as shown in Figure 5-1, isolating the vapor path of the nozzle and ensuring a tight connection.

**7.2** Record the initial reading from the index of the gas volume meter on the V/L Field Data Sheet at the end of this document. This initial reading shall be taken before each test. Do not use the final reading from the preceding test as the initial reading for the current test, unless it has been verified. This is necessary since the meter index may have moved due to the low pressure drop through the meter.

**7.3** Reset the stopwatch and, if appropriate, reset the totalizer on the dispenser.

**7.4** Holding the nozzle lever in the maximum hand-held position in order to dispense at the highest possible flow rate and begin dispensing into the portable gasoline tank. **Ensure that the nozzle spout is in contact with the grounded tank assembly during dispensing**. Start the stopwatch when the totalizer indicates dispensing has started.

**7.5** Dispense between four and one-half (4.5) and five (5.0) gallons of gasoline.

If the nozzle being tested introduces liquid into the V/L adaptor, the gas volume meter or the adaptor supply hose, the V/L of that nozzle shall be deemed a failure.

**7.6** Simultaneously stop both the stopwatch and gasoline dispensing.

**7.7** The following data for each test shall be recorded on the V/L Field Data Sheet:

**7.7.1** Dispenser (pump) number

**7.7.2** Fuel grade

**7.7.3** Nozzle serial number (found below nozzle handguard)

**7.7.4** Initial gas volume meter reading, in cubic feet

**7.7.5** Initial totalizer reading from the dispenser, in gallons

**7.7.6** Final gas volume meter reading, in cubic feet

**7.7.7** Final totalizer reading from the dispenser, in gallons

**7.7.8** Elapsed time during dispensing, in seconds

**Note**: Units other than cubic feet, gallons, and seconds may be used, provided that Equation 9-1 is appropriately modified.

**7.8** If the V/L Volumetric Ratio, as determined by Equation 9-1 is between 0.95 –1.15, the grade point complies with the specifications.

**7.9** If the V/L Volumetric Ratio is between 0.76 – 0.94, or greater than or equal to 1.16, conduct the test two additional times. Do not make adjustments to the gasoline dispensing or vapor recovery lines until all three test runs have been completed. Only adjustments to the V/L test equipment and the connection between the V/L adaptor and the nozzle will be allowed in order to ensure measurement accuracy. All other adjustments to the vapor recovery equipment, including but not limited to the vapor collection pump and the nozzle, are not allowed. If the V/L test equipment is adjusted, then the prior test run results for that grade point tested should not be used. Calculate the numerical average of the three test runs. If the average V/L value of these three test runs is within the allowable limits, compliance has been verified. If the resulting average is outside of the specified limits, the grade point tested does not comply with the specifications of the EO.

Note: Section 1.10 of the Healy 900 Nozzle portion of the **ARB Approved Installation, Operation and Maintenance Manual** provides instructions on making nozzle V/L adjustments.

**7.10** If the initial V/L Volumetric Ratio is less than or equal to 0.75, this indicates a V/L failure of the grade point tested.

**7.11** To avoid a build-up of gasoline, drain any condensed gasoline from the hoses between the gas volume meter and portable tank assembly, and the V/L adaptor and gas volume meter whenever fuel is emptied from the portable tank.

## 8. POST-TEST PROCEDURES

**8.1** Remove the V/L adaptor from the nozzle.

**8.2** Drain the dispensed product into the appropriate gasoline storage tank at the facility. **Ground the portable tank assembly to the storage tank before draining**. Do not mix product grades in the portable tank assembly without approval of the facility owner and use caution to drain the portable tank into the correct facility storage tank. If blending valves are utilized to produce product grades that do not have a dedicated storage tank, product from the blended grade shall be returned to the lower octane tank.

**8.3** After concluding testing at the facility, perform a post-test leak check of the V/L adaptor, the gas volume meter and the adaptor supply hose by connecting the V/L adaptor to a surrogate spout as shown in Figure 5-5 and described in Section 5.1B. Raise the test pressure to 5.00” ± 0.50” WC. There shall not be a pressure drop of more than 1.00” WC from the above starting pressure for 30 seconds from the start of the test. The data collected during the V/L testing between the last valid test equipment leak check (see Section 6.4) and the post-test leak check is invalid if the test equipment fails this post-test leak check.

**Note:** Leak checks shall be conducted in a shaded area or away from direct sunlight.

**8.4** Prior to transportation, the inlet and outlet of the gas volume meter shall be carefully sealed to prevent foreign matter from entering the meter.

**8.5** The Authority Having Jurisdiction (AHJ) may be contacted on the requirements for storage and transportation of the portable test tank. This would typically be the local fire department.

## 9. CALCULATING RESULTS

**9.1** The V/L Volumetric Ratio shall be calculated as shown in Equation 9-1.

$$V / L = \left[ \frac{y\,(V_f - V_i)}{G_f - G_i} \right] \times 7.481 \qquad \textbf{[Equation 9-1]}$$

Where:

| | | |
|---|---|---|
| V/L | = | Vapor to Liquid Volumetric Ratio, dimensionless |
| y | = | Correction factor for gas volume meter. See Equation 9-3 |
| $V_i$ | = | Initial gas volume meter reading, cubic feet |
| $V_f$ | = | Final gas volume meter reading, cubic feet |
| $G_i$ | = | Initial totalizer reading from the dispenser, gallons |
| $G_f$ | = | Final totalizer reading from the dispenser, gallons |
| 7.481 | = | Conversion factor from gallons to cubic feet, gallons per cubic foot |

**9.2** The gasoline dispensing rate during the V/L test shall be calculated as shown in Equation 9-2.

$$Q_g = \left[ \frac{G_f - G_i}{t} \right] \times 60 \qquad \textbf{[Equation 9-2]}$$

Where:

| | | |
|---|---|---|
| $Q_g$ | = | Gasoline dispensing rate, gallons per minute |
| $G_i$ | = | Initial totalizer reading from the dispenser, gallons |
| $G_f$ | = | Final totalizer reading from the dispenser, gallons |
| t | = | Elapsed time during dispensing event, seconds |
| 60 | = | Conversion factor, seconds per minute |

**9.3** The correction factor (determined during gas volume meter calibration) for correcting observed values of the gas volume meter shall be calculated as shown in Equation 9-3.

$$y = \left[ \frac{V_r}{V_m} \right] \qquad \textbf{[Equation 9-3]}$$

Where:

| | | |
|---|---|---|
| y | = | Correction factor for the gas volume meter's observed reading, dimensionless |
| $V_r$ | = | True volume from current calibration of gas volume meter, cubic feet |
| $V_m$ | = | Corresponding observed reading from gas volume meter, cubic feet |

## 10. REPORTING RESULTS

**10.1** Report V/L test data and other information as required in the V/L Field Data Sheet at the end of this document. Districts may require the use of alternate forms, provided they include the same minimum parameters as identified in the V/L Field Data Sheet.

## 11. ALTERNATE PROCEDURES

**11.1** This procedure shall be conducted as specified. Modifications to this test procedure shall not be used to determine compliance unless prior written approval has been obtained from the ARB Executive Officer, pursuant to Section 14 of Certification Procedure CP-201.

# V/L Field Data Sheet

GDF Name and Address:

_____

_____

_____

Tee Connection Test Result (6.1) _____ $ft^3$
Date of Last Gas Volume Meter Calibration _____
Gas Volume Meter Correction Factor (9.3) _____
Pressure Measurement Device Calibration Date _____

Testing Firm Name and Address:

_____

_____

_____

Phone No. (  )

Test Date/Time:

Test Performed by:_____
If Required by local district, provide
Technician Certification Number:_____
Certification Expiration Date:

**Pre-Test Leak Check:**
Initial/Final Pressures, in. $H_2O$_____/ _____
**Post-Test Leak Check:**
Initial/Final Pressures, in. $H_2O$_____/ _____

**A/C #** _____ **P/O #** _____

District Test Witness _____
Applicable ARB Executive Order (circle one)

VR-201 or VR-202

Allowable V/L Range 0.95 – 1.15

| 7.7.1 Pump # | 7.7.2 Fuel Grade | 7.7.3 Nozzle Serial # | 7.7.5 Initial Dispenser Totalizer, Gallons | 7.7.7 Final Dispenser Totalizer, Gallons | Total Gas Pumped, Gallons | 7.7.8 Time, Seconds | 9.2 Dispensing Rate, gpm | 7.7.4 Initial Meter Reading, ft3 | 7.7.6 Final Meter Reading, ft3 | 7.8, 9.1 V/L | 7.9 V/L Average (if necessary) | 7.8, 7.9 or 7.10 Pass or Fail |
|---|---|---|---|---|---|---|---|---|---|---|---|---|
| | | | | | | | | | | | | |
| | | | | | | | | | | | | |
| | | | | | | | | | | | | |
| | | | | | | | | | | | | |
| | | | | | | | | | | | | |
| | | | | | | | | | | | | |
| | | | | | | | | | | | | |
| | | | | | | | | | | | | |
| | | | | | | | | | | | | |
| | | | | | | | | | | | | |
| | | | | | | | | | | | | |
| | | | | | | | | | | | | |