Executive Order VR-202-H
Healy Phase II EVR System
Including In-Station Diagnostic (ISD) Systems

Exhibit 1
Part 1 - Healy Equipment List

Component	**Manufacturer/Model**
Nozzle	Healy Model 900[1] (Figures 1A-1 and 1A-2)
Clean Air Separator	Healy Model 9961 Clean Air Separator (Figures 1A-3 and 1A-4) Healy Model 9961H Clean Air Separator (Figures 1A-3H and 1A-6)
Inverted Coaxial Hoses	Healy Model 75 Series (3/4" I.D.) (Figures 1A-5, 1A-7 and 1A-8) 75W-XXX-YZYZ where W represents color of hose (varies) Note: Product label will have an "X" in this position for all hose colors XXX represents hose length First two digits for length in feet Last digit - length in tenths of foot Note: Product label will have "XXX" in this position for hose length Y represents hose end type S = Swivel End F = Fixed End Z represents thread type 2 = Healy Straight Thread 3 = Metric Thread 4 = Balance-Type Thread

[1] Nozzle can have either a two position or three position hold open clip (see Figure 1A-1).

Component	Manufacturer / Model
Dispenser Conversion Adaptors (Optional)[2]	
	Healy Model CX6-A (Required on Gasboy, Global Century, Reliance and Select Dispensers) Healy Model CX6-VV1A* Healy Model CX6-VV2A* Healy Model CX6-VV3A EBW Model 303-301-01 (Figures 1A-9 and 1A-10) Note: Items marked with asterisk (*) are no longer manufactured, but may be used for dispenser retrofit.
Reconnectable Breakaway Coupling	
	Healy Model 8701VV (Figures 1A-11 and 1A-12) Healy Model 807 Swivel (Figures 1A-13 and 1A-14)
Flow Limiter[3]	Healy Model 1301 (Figures 1A-15 and 1A-16) Healy Model 1302 (Figures 1A-17 and 1A-18)
Dispenser Vacuum Pump	
	Healy Model VP1000 Vacuum Pump Healy/Franklin Electric Model VP1000 Vacuum Pump (Figure 1A-19)

[2] If optional components are installed or required by regulations of other agencies, the components and model numbers manufactured by Franklin Fueling Systems may be used to facilitate installation. The use of dispenser conversion adaptors not listed above may be used to facilitate installation provided that all applicable performance standards are met.

[3] Flow limiter is mandatory when the flow rate is greater than 10.0 gallons per minute to comply with US EPA requirement. 1301 is used with 8701VV breakaway. 1302 is used with 807 swivel breakaway.

Component	Manufacturer / Model

Dispensers

Note: Unihose dispensers shall be required unless as provided by Section 4.10 of CP-201.

Gilbarco Encore Series[4]

Healy Kit VP1000R[5] or VP1000S[6]

Model #'s	Description:
NAO	Encore 1 Grade Multi-hose
NA1	Encore 2 Grade Multi-hose
NA2	Encore 3 Grade Multi-hose
NA3	Encore 4 Grade Multi-hose
NG0	Encore 3 Grade Single-Hose
NG1	Encore 4 Grade Single-Hose plus 1
NG4	Encore 2 Grade Single-Hose
NJ0	Multi-hose Blender
NJ2	Multi-hose Blender plus 1
NL0 NL1 NL2 NL3	Encore X+1 Blender
NN0 NN1 NN2 NN3	Encore X+0 Blender

GasBoy 9800 Series (Gilbarco)

Healy Kit VP1000M[7]

Model #'s Description:
9852 – Suffix1 Suffix2
9853 – Suffix1 Suffix2
Where:
Suffix1 can be:

A	=	Factory fabrication and assembly modifications to chassis
HC	=	High capacity model
M	=	Manifold supply inlet at the pumping unit inlet
TW1	=	Manifold supply inlet
TW2	=	Two individual supply inlets
X	=	Dispenser supplied by a submersible pump
Q	=	Utilizes an alternate meter and Pump

[4] Encore Dispensers factory equipped with Healy VP1000 will now have an angled (~13°) outlet casting.
[5] Kit used to install Healy components in Encore Balance series dispenser. VP1000R previously sold as equivalent to VP1000L.
[6] Kit used to install Healy components in Encore Assist series dispenser. VP1000S previously sold as equivalent to VP1000K.
[7] Kit used to install Healy components in GasBoy 9800 series dispenser

Component **Manufacturer / Model**

Suffix2 can be:

B	=	Battery back-up for electronics
C	=	Pump Interface
D	=	DC conduit and junction box
F	=	Fuel filter
G	=	Imperial gallons registration
H	=	High hose retriever
I	=	Internal hose retriever
L	=	Lighted panel
N	=	Equipped to handle a long spout nozzle
P	=	Satellite dispenser as part of the unit (for connection to a master pump)
PP	=	Solenoid valves (optional only on pumps)
R	=	Liters registration
S	=	Piping for connection to satellite
SS	=	Stainless steel panels
SSA	=	Equipped with stainless steel doors
SSTS	=	Stainless steel tops and doors
T	=	Mechanical totalizer
U	=	Submersible drive relays
W	=	Heater
Y	=	Vapor recovery ready
Z	=	Front Load Nozzle
2	=	230 VAC/60hz operation
3	=	230 VAC/60hz operation with 380VAC/60hz motor (available on all models except 9852Q)
25	=	230VAC/50hz operation
35	=	230VAC/50hz operation with 380VAC/50hz motor
4	=	RS-485 interface
5	=	50hz operation
7	=	Electronic totalizer activator on both sides
9	=	Provided with 900-R Series TopKat

Component **Manufacturer / Model**

Wayne Harmony Series

Healy Kit VP1000N[8] or VP1000Q[9]

Model #'s Description:
prefix/VXXXYZ/suffix
Where:
prefix = Any number or letter (with a possible "H" for Harmony)
V = Vista
X = Any digit
Y = D or P
D = remote dispenser type for delivering fuel
P = suction pump for delivering fuel
Z = 1, 3, 4, 5, 6, 7 or 8
suffix = D1 or D2, and any combination of number(s) or letter(s)

Wayne Ovation Series

Healy Kit VP1000P[10]

Model #'s Description:
XYZ/ABC
Where:
X = B or R
B = Blended Dispenser
R = Regular Dispenser
Y = Number of hoses per side
1 = one hose per side
2 = two hoses per side
Z = Number of inlets per side
1 = one inlet
2 = two inlets
3 = three inlets
A = Number of grades
1 = one grade
2 = two grades
3 = three grades
4 = four grades
5 = five grades

[8] Kit used to install Healy components to Harmony Balance series dispenser
[9] Kit used to install Healy components to Harmony Assist series dispenser
[10] Kit used to install Healy components to Ovation Balance or Assist series dispenser. VP1000P previously sold as equivalent to VP1000C.

Component **Manufacturer / Model**

B = Number of sides
1 = one side
2 = two sides
C = Number of columns
1 = one column
2 = two columns

Wayne Vista Series

Healy Kit VP1000T[11] or VP1000V[12]

Model #'s Description:
prefix/VXXXYZ/suffix
Where:
Prefix= Any number or letter
V = Vista
X = Any digit
Y = D or P
D = remote dispenser type for delivering fuel
P = suction pump for delivering fuel
Z = 1, 3, 4, 5, 6, 7 or 8
Suffix = D1 or D2, and any combination of number(s) or letter(s)

Wayne Global Century & Select Series[13]

Model #'s Description
3/GABCDE/Suffix
Where:
A = Model Series
2 = Global Century
7 = Select
B = Cabinet Style
2 = Column Style
C = Flow Rate Capacity
0 = Standard Flow
4 = Twin I, Dual Filters

[11] Kit used to install Healy components to 3V Vista series dispenser. VP1000T previously sold as equivalent to VP1000C.
[12] Kit used to install Healy components to 1V and 2V Vista series dispenser. VP1000V previously sold as equivalent to VP1000F.
[13] Dispenser configuration only available for purchase from Dresser Wayne. There is no Kit for retrofit of this dispenser type.

Component **Manufacturer / Model**

D = Number of Hoses & Orientation
- 1 = Single, Island-Oriented
- 2 = Twin I, Island-Oriented
- 3 = Twin II, Island-Oriented
- 7 = Twin I, Lane-Oriented OR Single Side, Lane-Oriented w/ "R" Suffix
- 8 = Twin II, Lane-Oriented

E = Dispenser Type
- D = Dispenser-Remote

Suffix = Any combination of letters or numbers

Wayne Reliance Series[14]

Model #'s /GABCDE/Suffix — Description

Where:

A = Model Series
- 5 = Reliance Mechanical Fleet – Pricing
- 6 = Reliance Mechanical Fleet – Volume Only

B = Cabinet Style
- 2 = Column Style

C = Flow Rate Capacity
- 0 = Standard Flow

D = Number of Hoses & Orientation
- 1 = Single, Island-Oriented
- 2 = Twin I, Island-Oriented
- 3 = Twin II, Island-Oriented

E = Dispenser Type
- D = Dispenser-Remote

Suffix = Any combination of letters or numbers

[14] Dispenser configuration only available for purchase from Dresser Wayne. There is no Kit for retrofit of this dispenser type.

Component	**Manufacturer / Model**
	FFS/Healy Universal Retrofit Manual[15]
Healy Kits	VP1000A[16] VP1000D[17] VP1000G[18] VP1000H[19] VP1000J[20] Z071V[21] Z070E[22] Z008[23] Z009[24]

Table 1
Components Exempt from Identification Requirements

Component Name	Manufacturer	Model Number
Dispenser Kit	Healy	VP1000A & VP1000B VP1000D VP1000G VP1000H VP1000J VP1000M VP1000N VP1000P VP1000Q VP1000R VP1000S VP1000T VP1000V Z008 Z009 Z070E Z071V

[15] Any dispenser not currently listed in Exhibit 1 can be upgraded to Healy EVR using one of the kits listed in this section.
[16] Kit contains Universal Wire Harness for use in any dispenser make or model. For use with any VAC or VDC solenoid valves. VP1000A previously sold as equivalent to VP1000B.
[17] Early Gilbarco Encore 300 Blender Dispensers – 120 VAC valves (mfg. before 04/2003).
[18] Wayne DL Non-Blender Dispensers – 120 VAC valves.
[19] Tokheim Premier C Blender Dispensers – 24 VDC valves.
[20] Early Tokheim Blender Dispensers – Combination 120 VAC & 24 VDC valves.
[21] Universal Vapor Kit.
[22] Universal Electrical Kit.
[23] Standard Low Profile Single Hose Dispenser Retrofit Kit.
[24] Standard Low Profile Dual Hose Dispenser Retrofit Kit.

Executive Order VR-202-H
Healy Phase II EVR System
Including In-Station Diagnostic (ISD) Systems

Exhibit 1

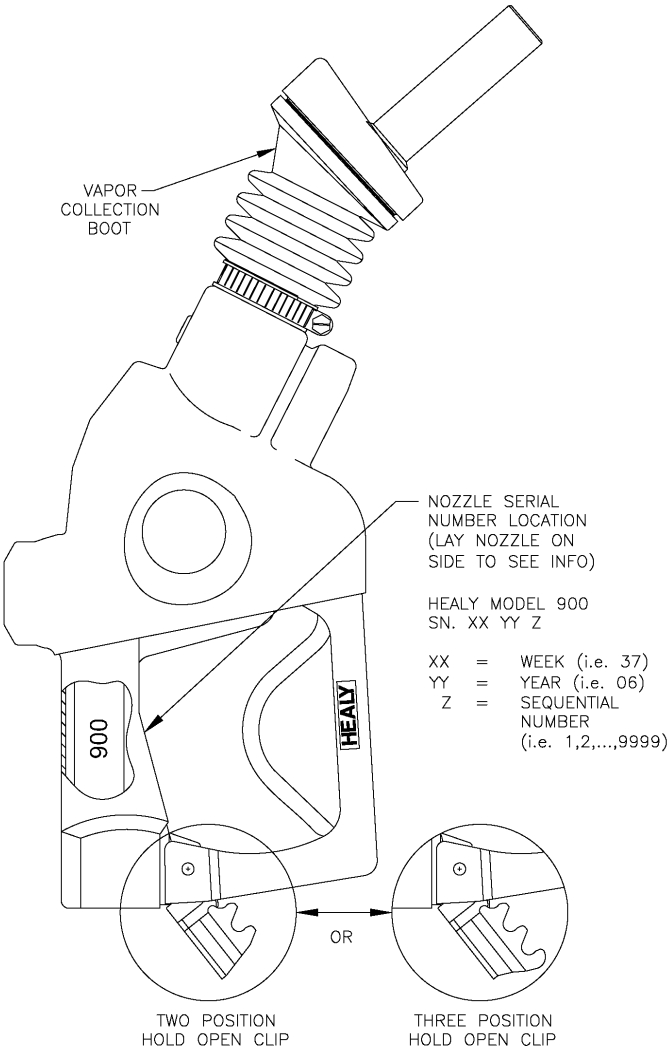

Figure 1A-1
Healy Model 900 EVR Nozzle

Figure 1A-2
Healy Model 900 Nozzle

Executive Order VR-202-H
Healy Phase II EVR System
Including In-Station Diagnostic (ISD) Systems

Exhibit 1
Figure 1A-3
Healy Model 9961 Clean Air Separator

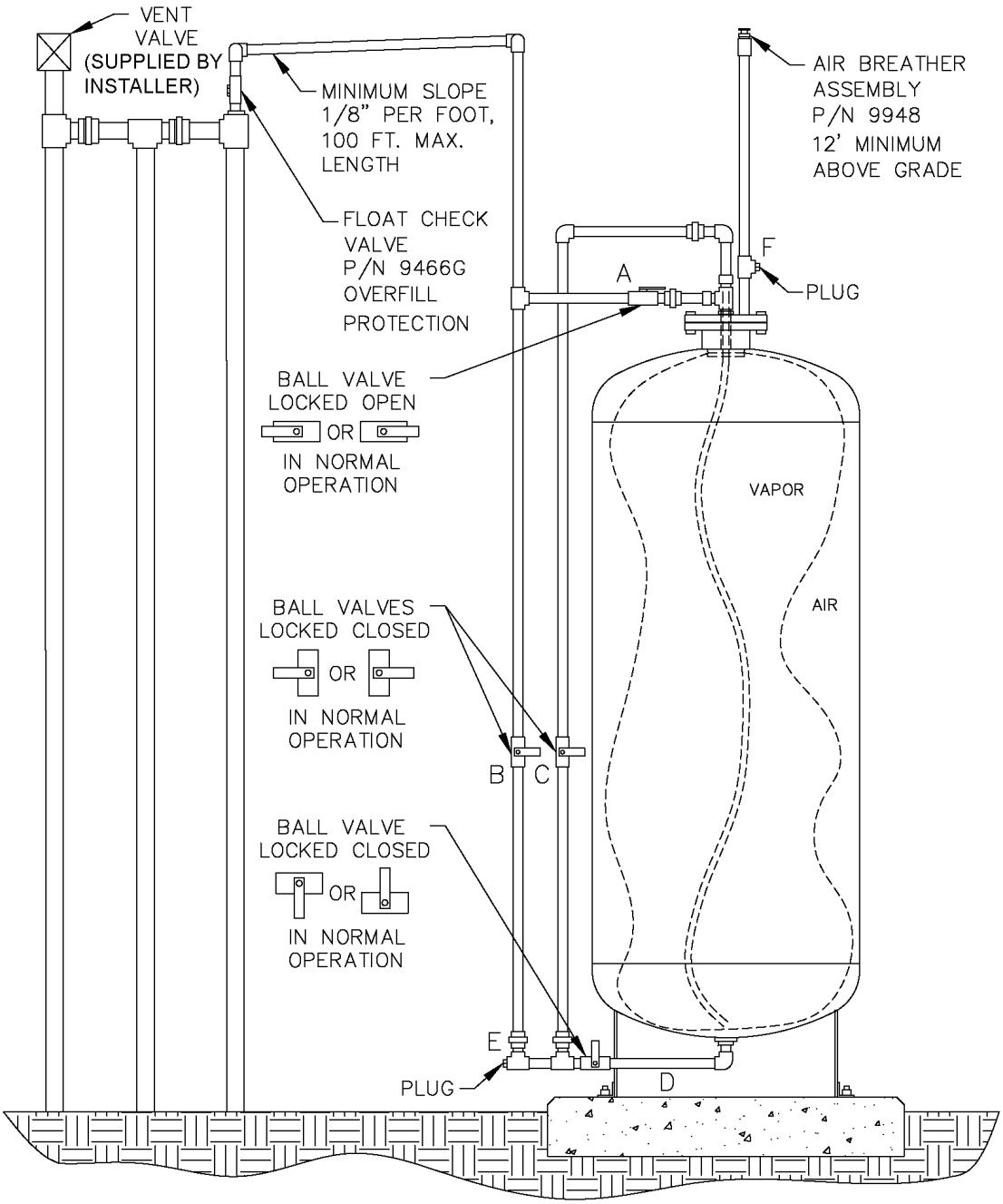

Executive Order VR-202-H
Healy Phase II EVR System
Including In-Station Diagnostic (ISD) Systems

Exhibit 1

Figure 1A-4
Healy Model 9961 Clean Air Separator

Figure 1A-5
Healy Model 75 Series Hose

Executive Order VR-202-H
Healy Phase II EVR System
Including In-Station Diagnostic (ISD) Systems

Exhibit 1
Figure 1A-3H
Healy Model 9961H Clean Air Separator

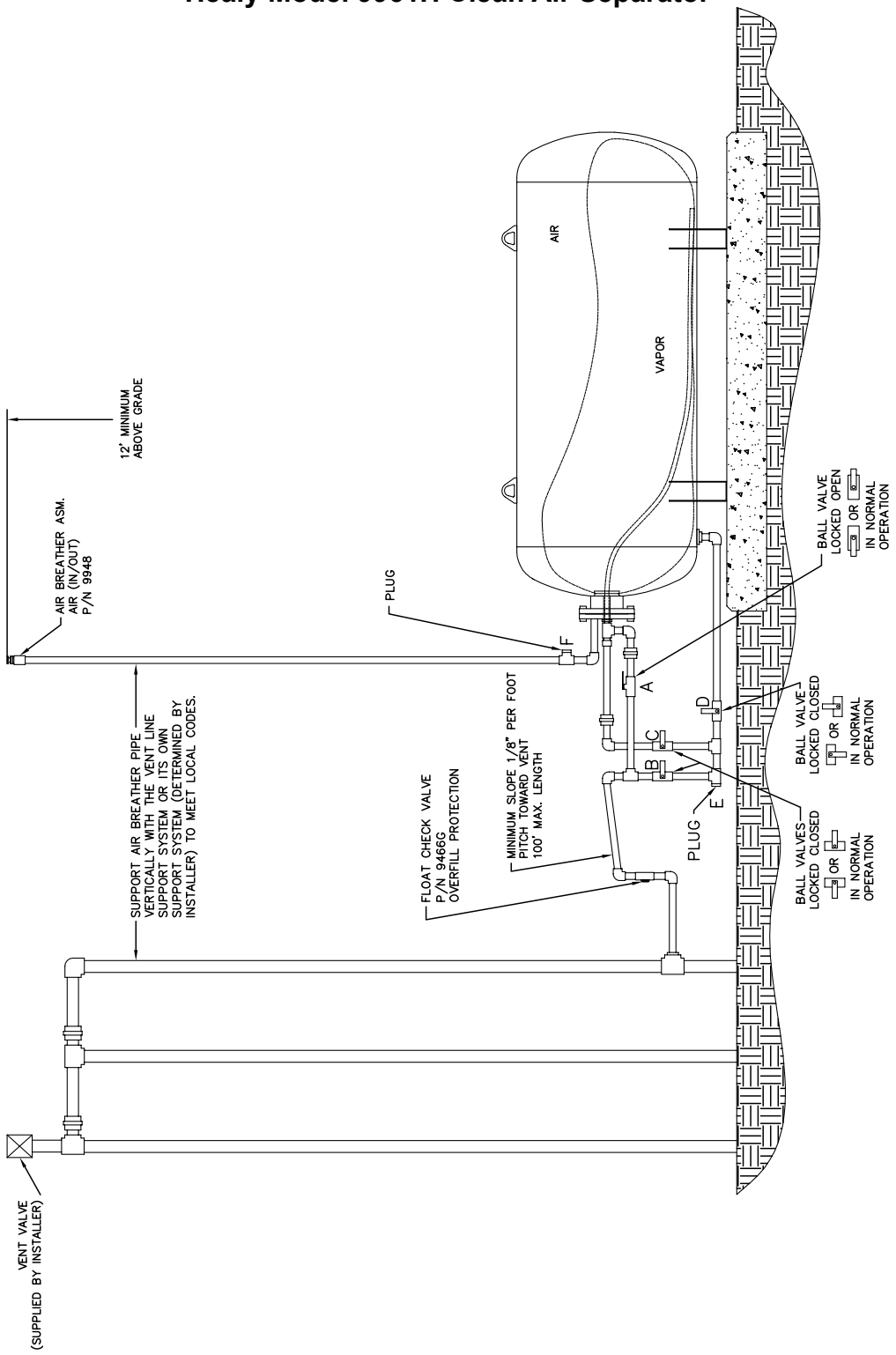

Executive Order VR-202-H
Healy Phase II EVR System
Including In-Station Diagnostic (ISD) Systems

Exhibit 1
Figure 1A-6
Healy Model 9961-H Clean Air Separator

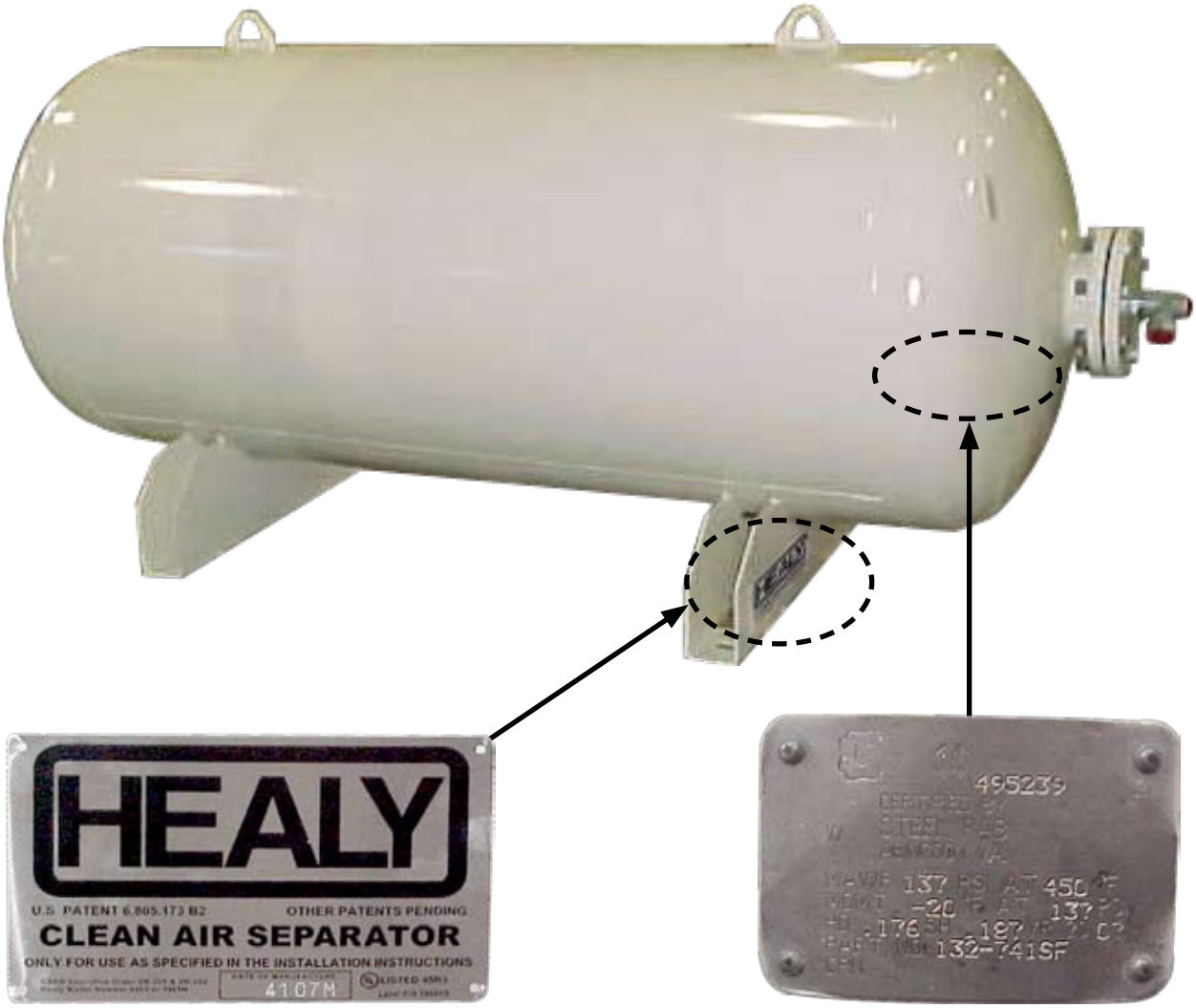

Clean Air Separator Name Plate

Clean Air Separator Data Plate
(not pictured on far side of base)

Executive Order VR-202-H
Healy Phase II EVR System
Including In-Station Diagnostic (ISD) Systems

Exhibit 1
Figure 1A-7
Hanging Hardware Selection Options
Model 8701VV Breakaway and 1301 Flow Limiter

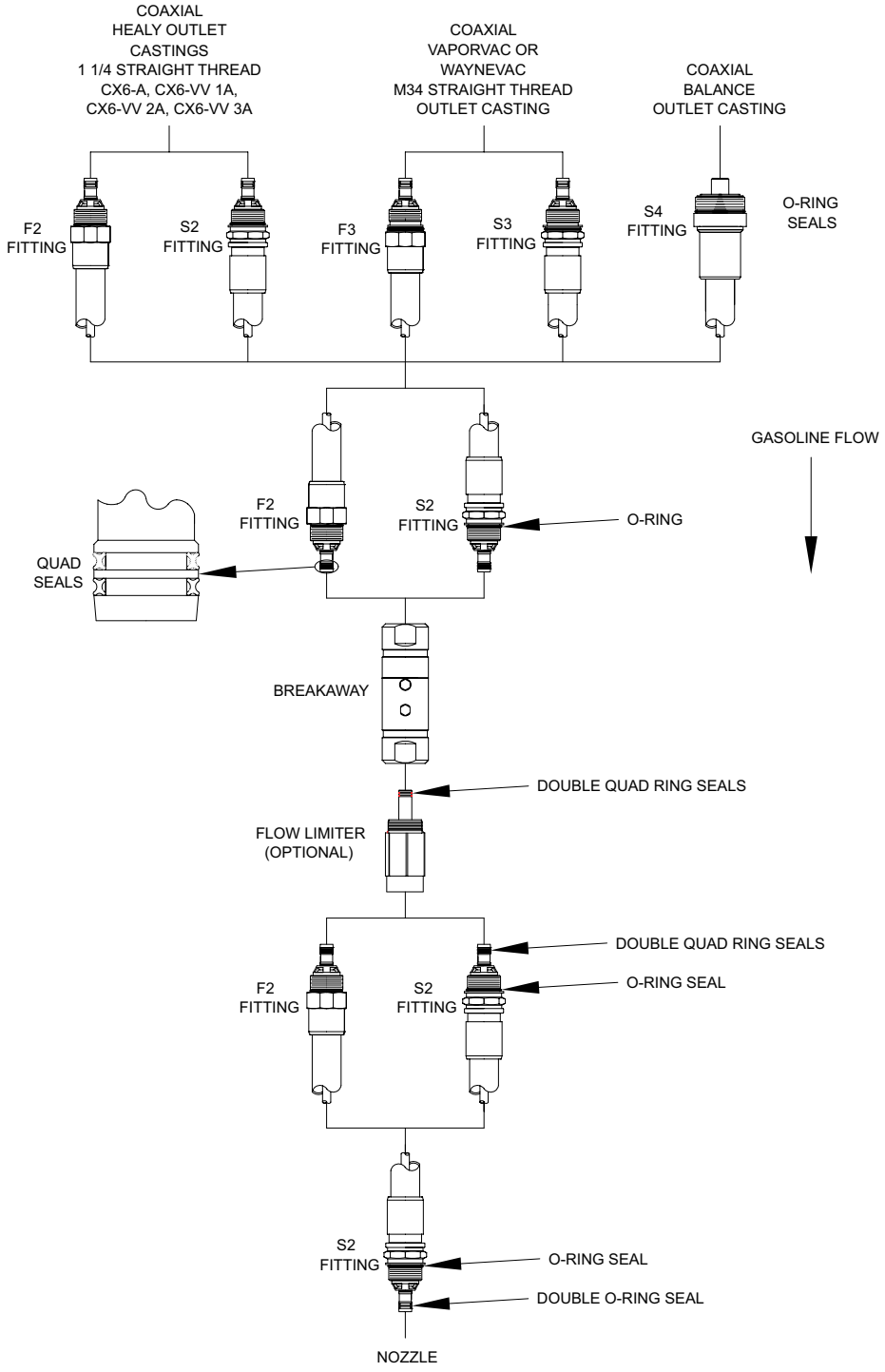

Executive Order VR-202-H
Healy Phase II EVR System
Including In-Station Diagnostic (ISD) Systems

Exhibit 1
Figure 1A-8
Hanging Hardware Selection Options
Model 807 Swivel Breakaway and 1302 Flow Limiter

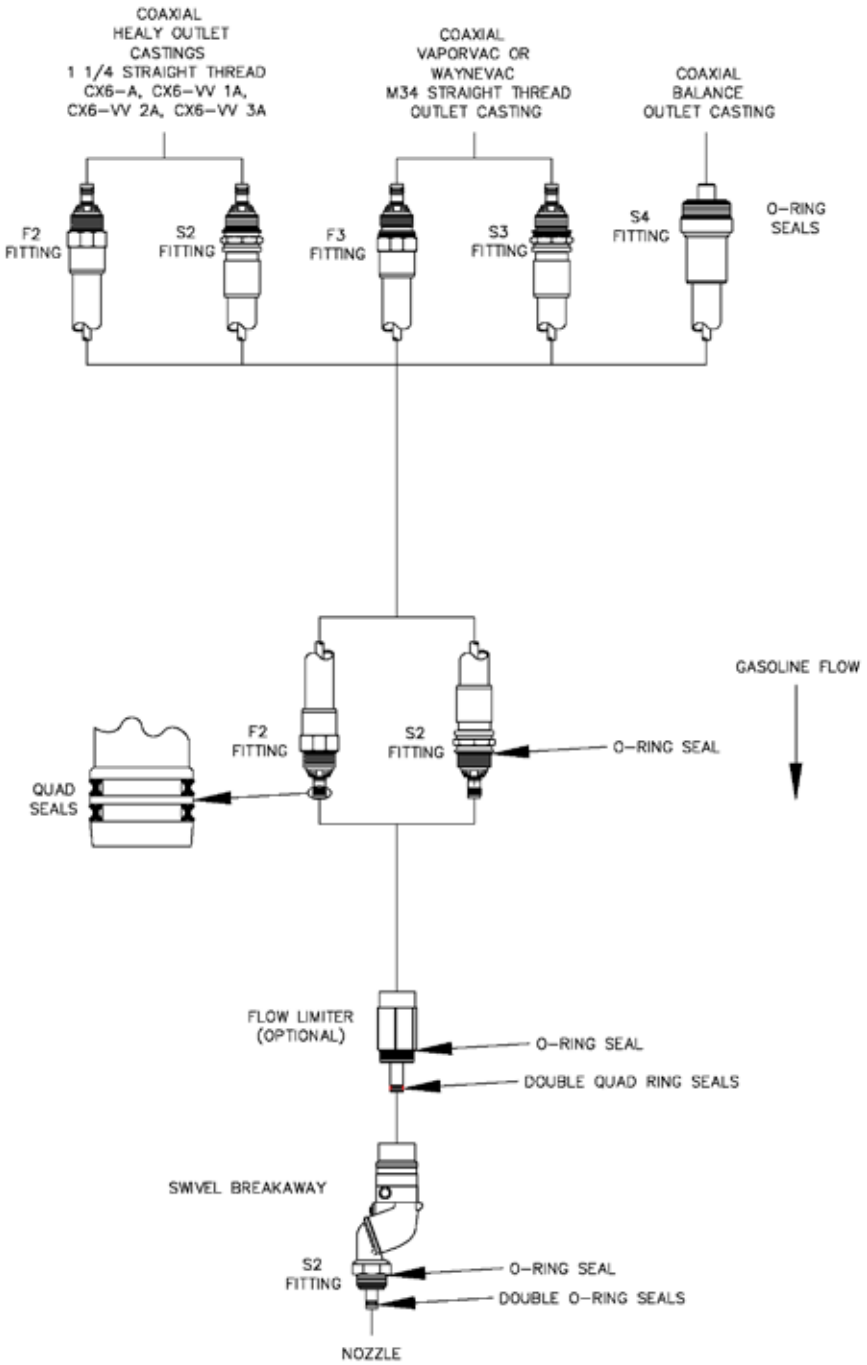

Executive Order VR-202-H
Healy Phase II EVR System
Including In-Station Diagnostic (ISD) Systems

Exhibit 1
Dispenser Conversion Adaptors

Figure 1A-9
Healy Model CX6-A

Figure 1A-9
Healy Model CX6-VV1A

Figure 1A-9
Healy Model CX6-A

Figure 1A-9
Healy Model CX6-VV2A

Executive Order VR-201-H
Healy Phase II EVR System
Not Including ISD

Exhibit 1
Dispenser Conversion Adaptors

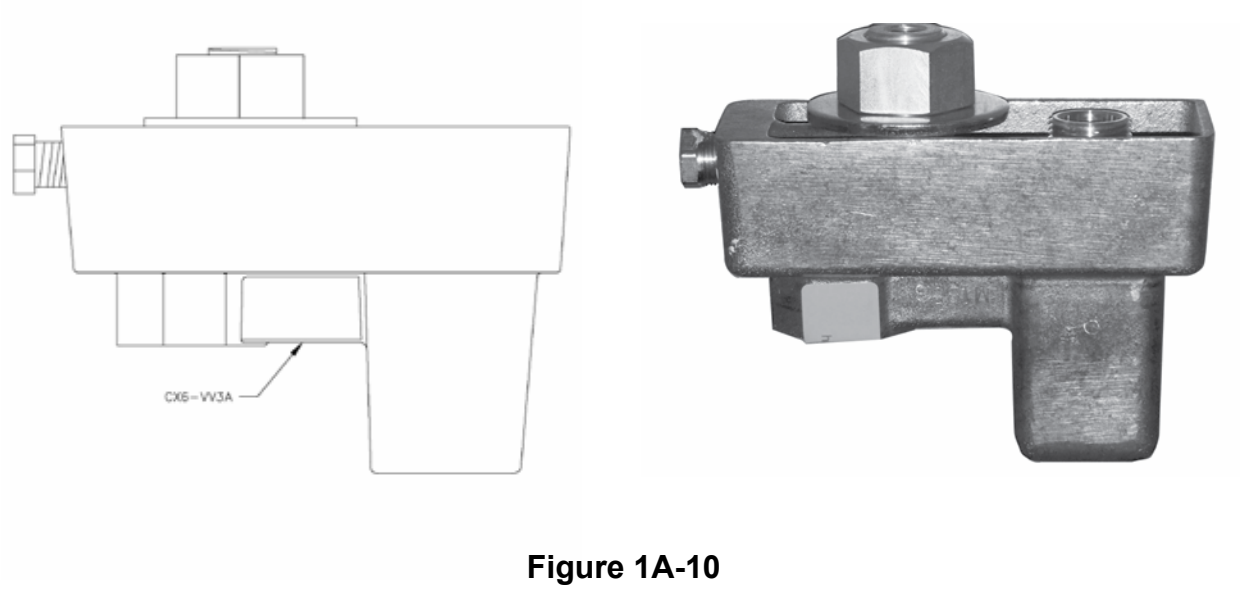

Figure 1A-10
Healy Model CX6-VV3A

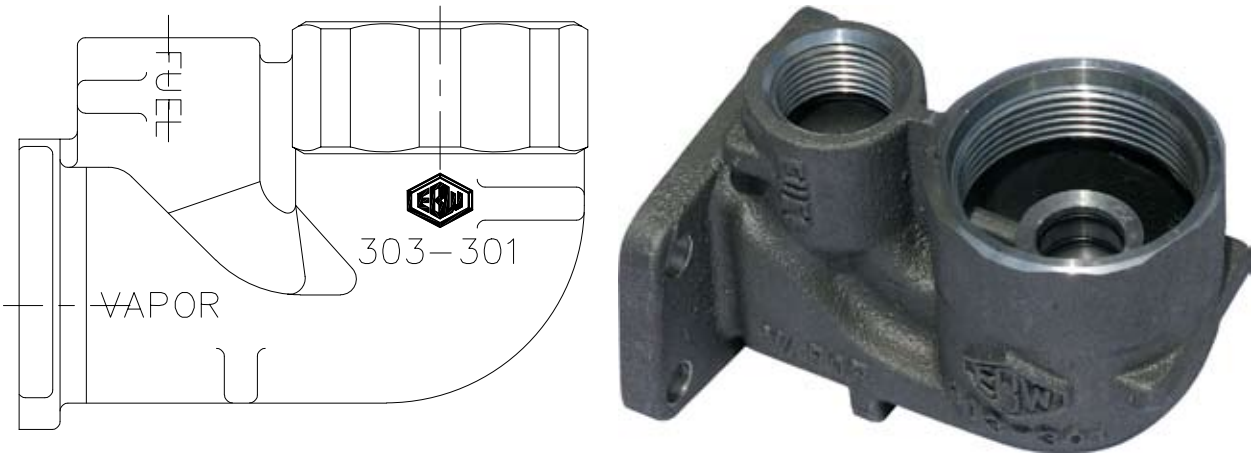

Figure 1A-10
EBW Model 303-301-01

Executive Order VR-202-H
Healy Phase II EVR System
Including In-Station Diagnostic (ISD) Systems

Exhibit 1
Healy Model 8701VV Breakaway

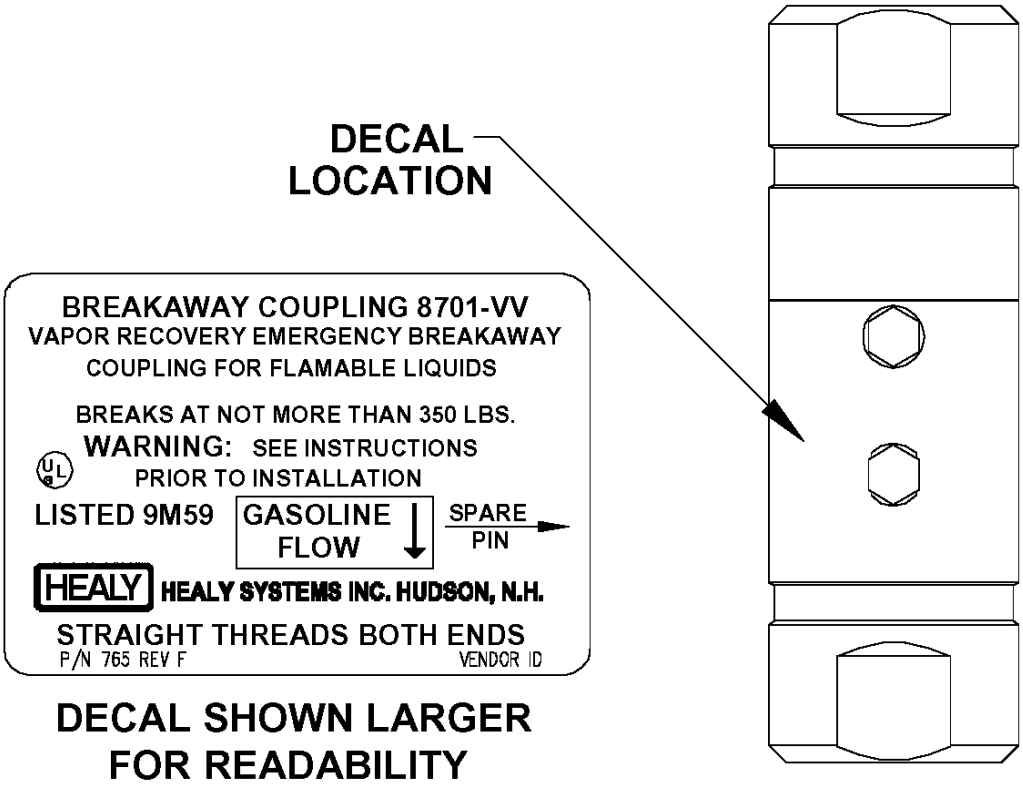

Figure 1A-11

Figure 1A-12

Executive Order VR-202-H
Healy Phase II EVR System
Including In-Station Diagnostic (ISD) Systems

Exhibit 1
Healy Model 807 Swivel Breakaway

Figure 1A-13

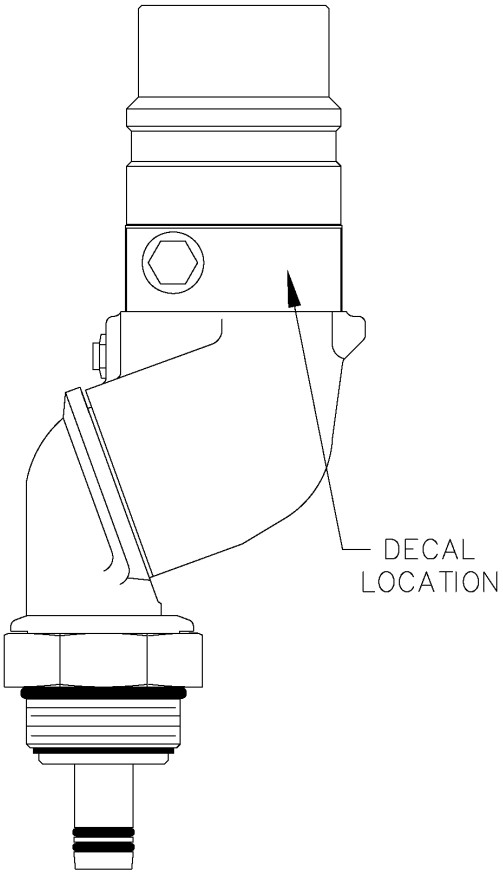

Figure 1A-14

DECAL SHOWN LARGER
FOR READABILITY

Executive Order VR-202-H
Healy Phase II EVR System
Including In-Station Diagnostic (ISD) Systems

Exhibit 1

Figure 1A-15
Healy Model 1301 Flow Limiter

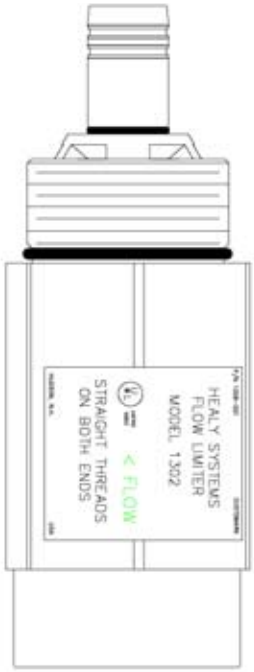

Figure 1A-17
Healy Model 1302 Flow Limiter

Figure 1A-16
Healy Model 1301 Flow Limiter

Figure 1A-18
Healy Model 1302 Flow Limiter

Executive Order VR-202-H
Healy Phase II EVR System
Including In-Station Diagnostic (ISD) Systems

Exhibit 1
Figure 1A-19
Healy Model VP1000 Vacuum Pump

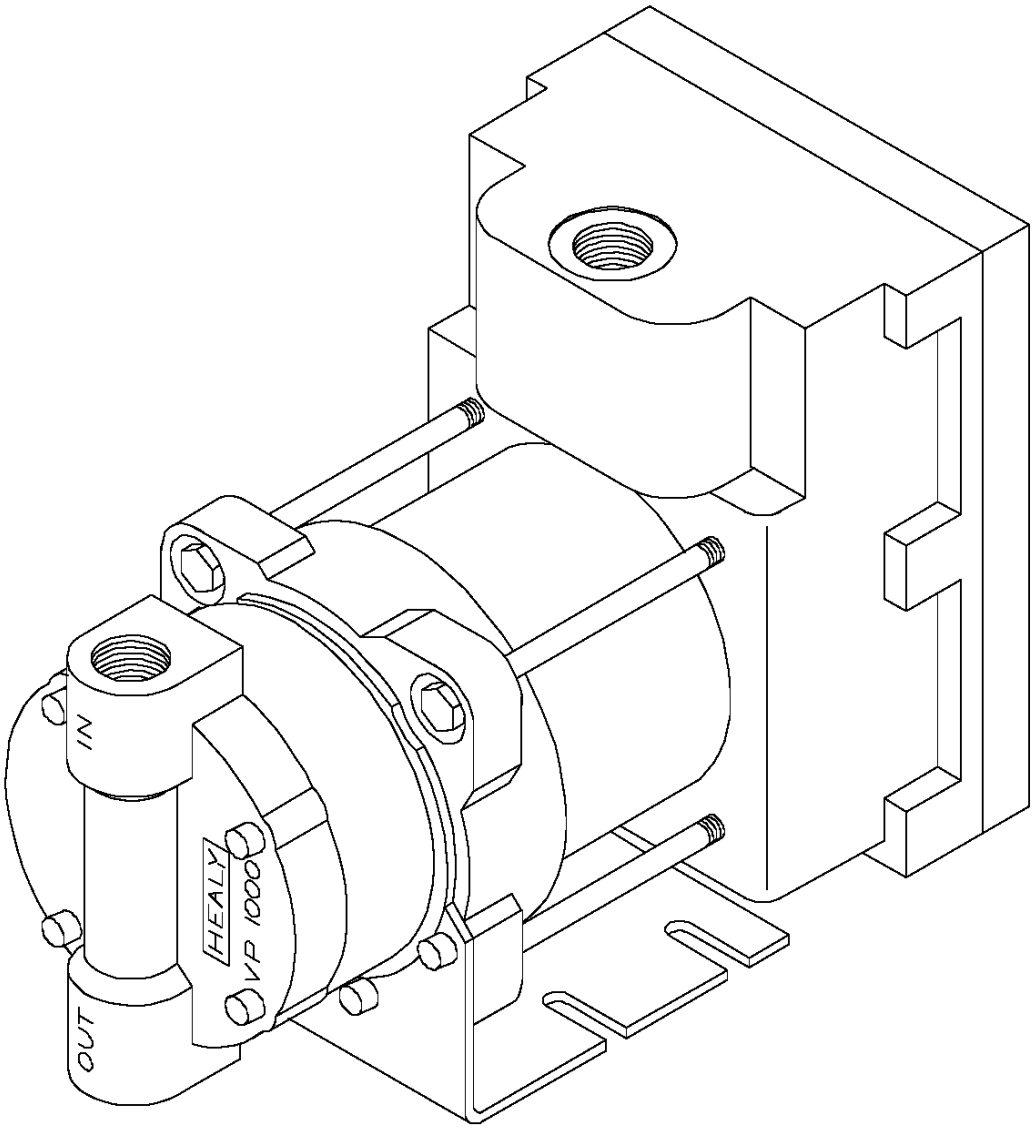

Part II - In-Station Diagnostics
Option I - Veeder-Root Equipment

Component	Manufacturer/Model
TLS Console TLS-350 TLS-350 Plus TLS-350R Red Jacket ProMax Gilbarco EMC Simplicity	Veeder-Root 8482XX-XXX Veeder-Root 8470XX-XXX X = Any digit (Figure 1A-20)
ISD Software	Veeder-Root ISD 1.02
Vapor Flow Meter (1 per Dispenser)	Veeder-Root 331847-XXX X = Any digit (Figure 1A-21)
Vapor Pressure Sensor (1 per GDF)	Veeder-Root 331946-001 (Figure 1A-22)
Dispenser Interface Module (DIM)	Veeder-Root DIM Series (Figure 1A-23)
RS232 Interface Module	Veeder-Root RS232 Interface Module Series (Figure 1A-24)

Executive Order VR-202-H
Healy Phase II EVR System
Including In-Station Diagnostic (ISD) Systems

Exhibit 1
Figure 1A-20
Veeder-Root 8482XX-XXX
Veeder-Root 7470XX-XXX
Standard TLS Console

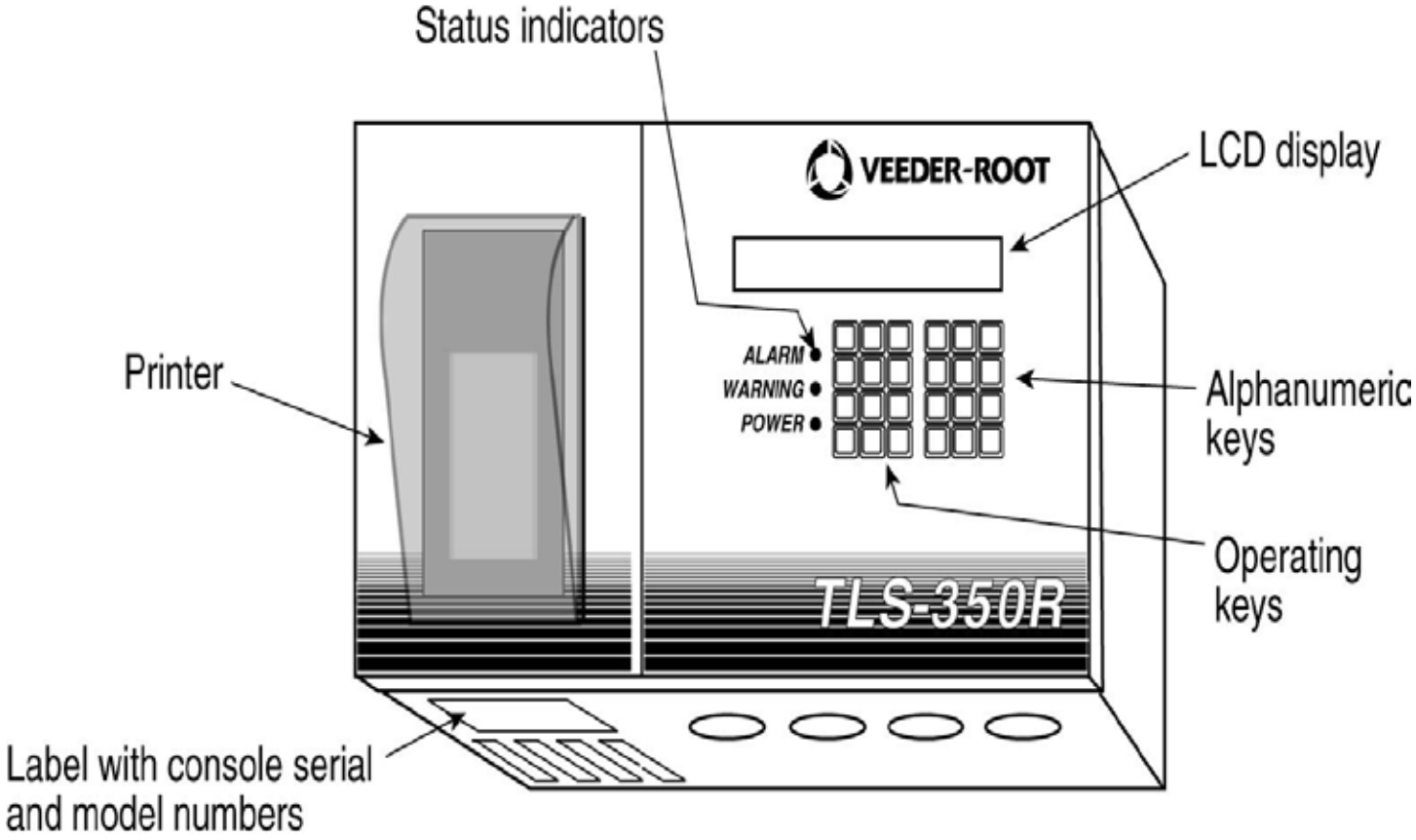

Executive Order VR-202-H
Healy Phase II EVR System
Including In-Station Diagnostic (ISD) Systems

Exhibit 1

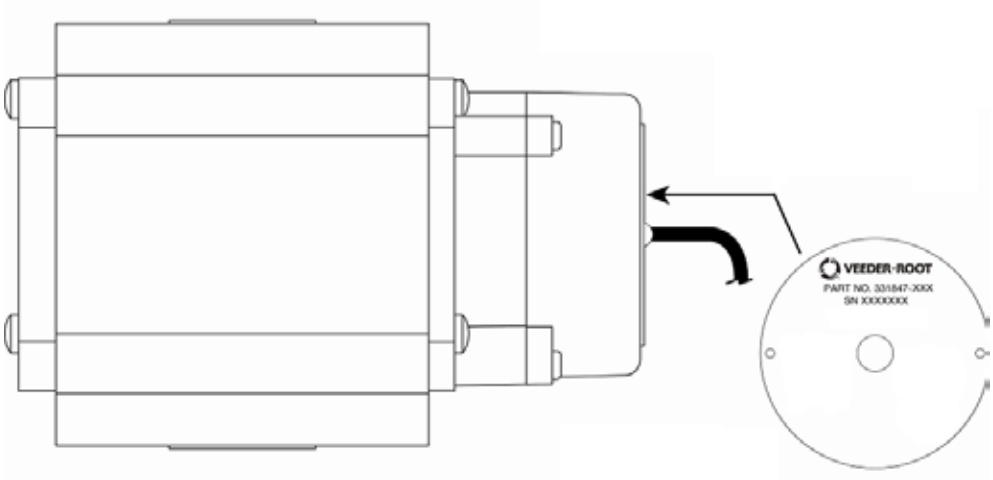

Figure 1A-21
Veeder-Root 331847-XXX
Vapor Flow Meter

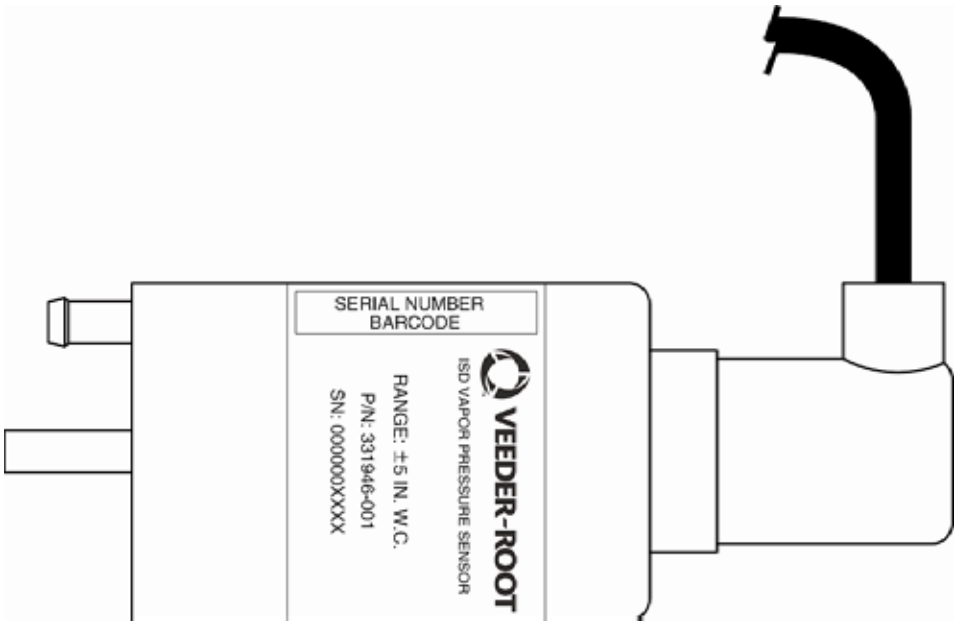

Figure 1A-22
Veeder-Root 331946-001
Vapor Pressure Sensor

Executive Order VR-202-H
Healy Phase II EVR System
Including In-Station Diagnostic (ISD) Systems

Exhibit 1

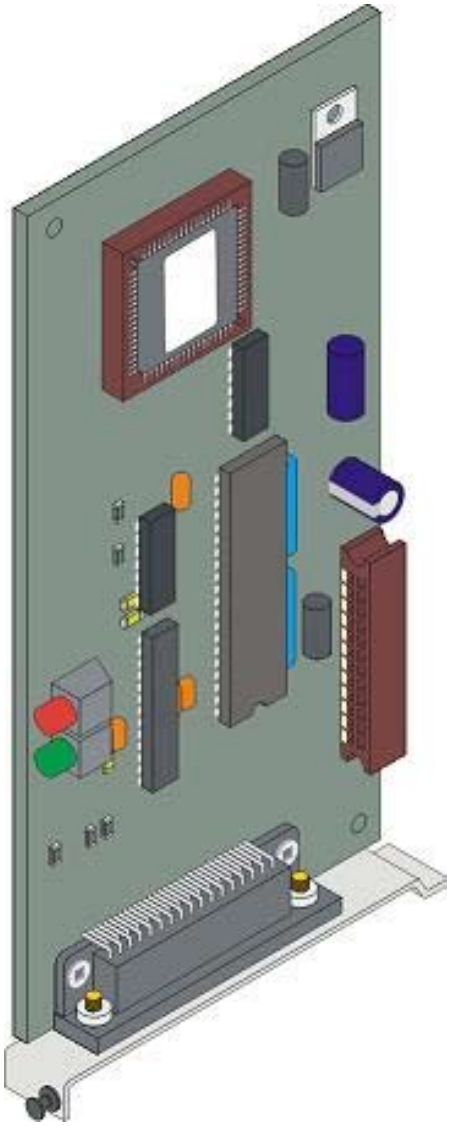

Figure 1A-23
Veeder-Root
Dispenser Interface Module (DIM)

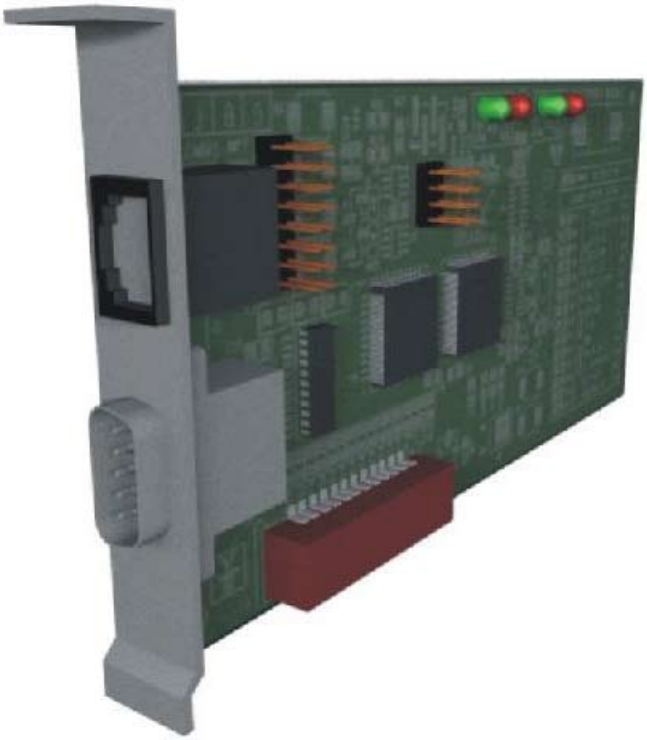

Figure 1A-24
Veeder-Root
RS232 Interface Modules

Option II - INCON Equipment List

Component	Manufacturer/Model
Console TS-EMS TS-550 TS-5000	INCON / TEMSXXXX/YV Where: X represents hardware option (Example: X can be: 'D' for Display 'P' for Printer) Y represents software option (Example: Y can be: 'S' for Secondary Containment Monitoring) V represents Vapor Recovery Monitoring Application INCON / T550XXXX/YYYYV INCON / T5000XXXX/YYYYV Where: X represents hardware option (Example: X can be: 'D' for Display 'P' for Printer) Y represents software option (Example: Y can be: 'T' for Tank Testing) V represents Vapor Recovery Monitoring Application (Figure 1A-25) Note: 1. All consoles come standard with RS-232 (COMM 1) and Ethernet ports for data access.
Vapor Recovery Monitoring (VRM) Software	INCON / TS-VRM Version 1.1.0
Vapor Flow Meter (1 per Dispenser)	INCON TS-VFM (Figure 1A-26)
Vapor Pressure Sensor (1 per GDF)	INCON TS-VPS (Figure 1A-27)
Data Transfer Unit (Optional)[1] (1 per dispenser and 1 per GDF)	INCON TS-DTU/P (Figure 1A-28)
Dispenser Retrofit Kit (Optional)[1] (1 per dispenser with DTU)	INCON TS-DRK

[1] Optional installation method for the replacement of dedicated wires to VFM and VPS. Refer to the IOM for more information

Executive Order VR-202-H
Healy Phase II EVR System
Including In-Station Diagnostic (ISD) Systems

Exhibit 1
Figure 1A-25
INCON TEMSXXXX/YV
INCON T550XXXX/YYYYV
INCON T5000XXXX/YYYYV

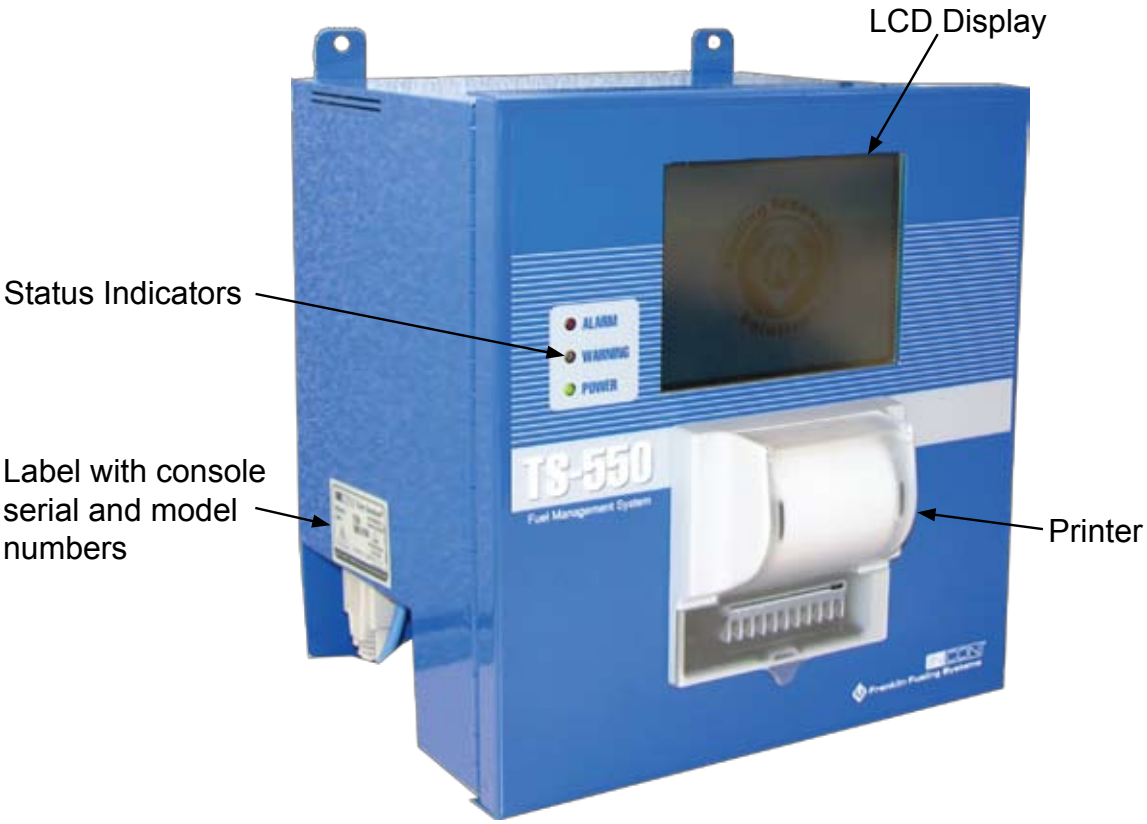

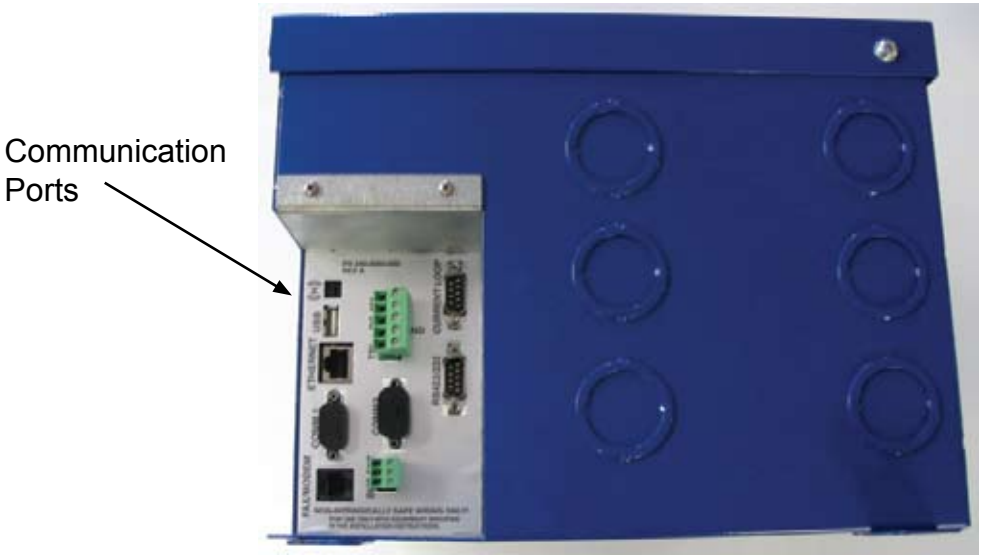

Executive Order VR-202-H
Healy Phase II EVR System
Including In-Station Diagnostic (ISD) Systems

Exhibit 1

Figure 1A-26
INCON TS-VFM
Vapor Flow Meter

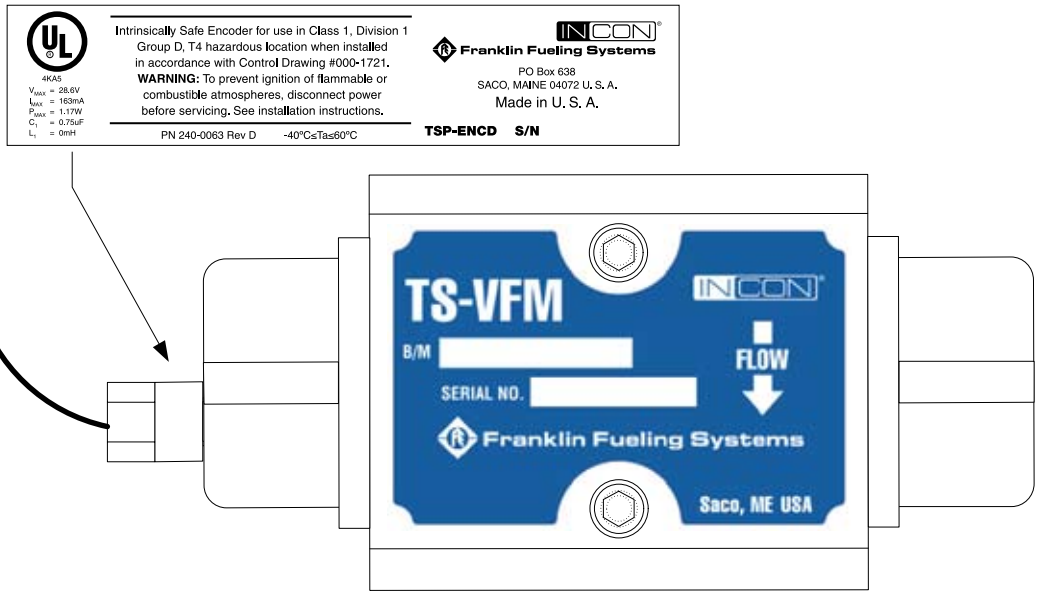

Figure 1A-27
INCON TS-VPS
Vapor Pressure Sensor

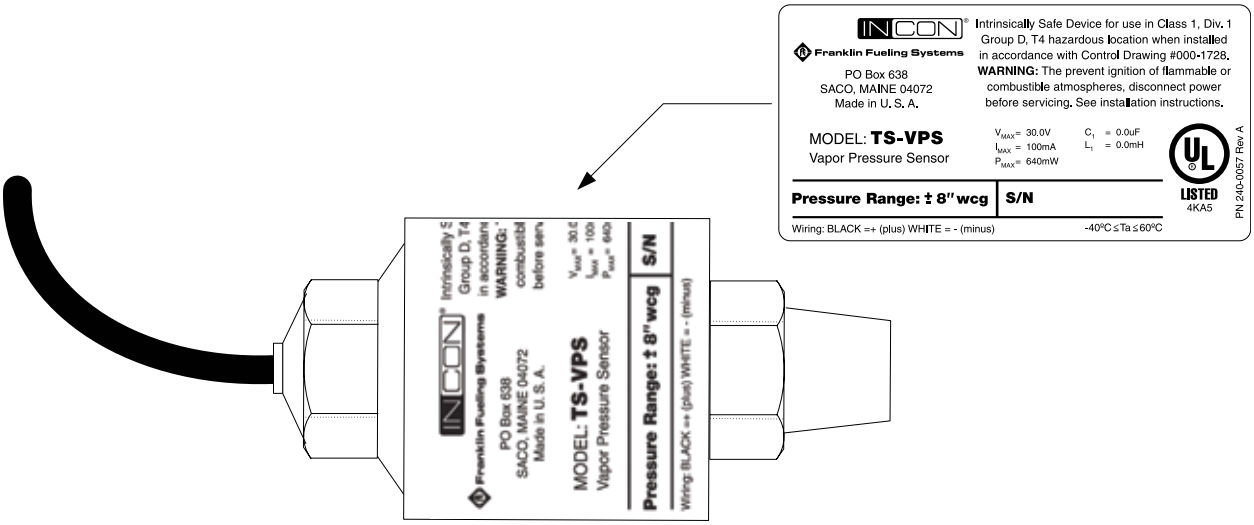

Executive Order VR-202-H
Healy Phase II EVR System
Including In-Station Diagnostic (ISD) Systems

Exhibit 1
Figure 1A-28
INCON TS-DTU/P
Data Transfer Unit

Label with DTU Serial
Number and ID Number