State of California
AIR RESOURCES BOARD

EXECUTIVE ORDER VR-202-H

Franklin Fueling Systems, Inc.
Healy Phase II Enhanced Vapor Recovery (EVR) System
Including In-Station Diagnostics (ISD) Systems

WHEREAS, the California Air Resources Board (ARB) has established, pursuant to California Health and Safety Code sections 25290.1.2, 39600, 39601 and 41954, certification procedures for systems designed for the control of gasoline vapor emissions during motor vehicle fueling operations (Phase II EVR vapor recovery systems) in its CP-201, ***Certification Procedure for Vapor Recovery Systems at Gasoline Dispensing Facilities*** (Certification Procedure) as last amended May 25, 2006, incorporated by reference in title 17, California Code of Regulations, section 94011;

WHEREAS, ARB has established, pursuant to California Health and Safety Code sections 39600, 39601, 39607, and 41954, test procedures for determining the compliance of Phase II vapor recovery systems with emission standards;

WHEREAS, Franklin Fueling Systems, Inc. (FFS) requested and was granted certification of the Healy Phase II Enhanced Vapor Recovery (EVR) System (Healy system) Including Veeder-Root In-Station Diagnostics (Veeder-Root ISD) pursuant to the Certification Procedure on August 31, 2005 by Executive Order VR-202-A, and last modified on June 17, 2008, by Executive Order VR-202-G;

WHEREAS, the Certification Procedure provides that the ARB Executive Officer shall issue an Executive Order if he or she determines that the vapor recovery system conforms to all of the applicable requirements set forth in the Certification Procedure;

WHEREAS, G-01-032 delegates to the Chief of the Monitoring and Laboratory Division the authority to certify or approve modifications to certified Phase I and Phase II vapor recovery systems for gasoline dispensing facilities;

WHEREAS, I, William V. Loscutoff, Chief of the Monitoring and Laboratory Division find that the Healy Phase II EVR System Including ISD systems conforms with all requirements set forth in the Certification Procedure, including compatibility when fueling vehicles equipped with onboard refueling vapor recovery systems, and results in a vapor recovery system which is at least 95.0 percent efficient and does not exceed 0.38 pounds of hydrocarbons per 1,000 gallon of gasoline transferred when tested pursuant to TP-201.2, ***Efficiency and Emission Factor for Phase II Systems*** (May 2, 2008);

NOW, THEREFORE, IT IS HEREBY ORDERED that the Healy Phase II EVR System Including ISD systems are certified to be at least 95 percent efficient and does not exceed 0.38 pounds of hydrocarbon per 1,000 gallons of gasoline transferred in attended and/or self-service mode when used with an ARB-certified Phase I vapor recovery system and installed operated, and maintained as specified herein and in the following exhibits. Exhibit 1 contains a list of the equipment certified for use with the Healy Phase II EVR System Including ISD. Exhibit 2 contains the performance standards, specifications, typical installation drawings and maintenance intervals applicable to the Healy Phase II EVR System Including ISD as installed in a gasoline dispensing facility (GDF). Exhibit 3 contains the manufacturing specifications. Exhibit 4 is the test procedure for verifying performance of the Healy Clean Air Separator. Exhibit 5 is the vapor to liquid ratio test procedure for verifying performance of the Healy 900 Nozzle. Exhibit 6 is the Healy and ISD Phase II EVR Systems Limited Warranty. Exhibit 7 is the nozzle bag test procedure. Exhibit 8 provides Required Items in conducting TP-201.3. Exhibit 9 is the Veeder-Root ISD Operability Test Procedure. Exhibit 10 is the INCON ISD Operability Test Procedure.

IT IS FURTHER ORDERED that compliance with the applicable certification requirements, rules and regulations of the Division of Measurement Standards of the Department of Food and Agriculture, the Office of the State Fire Marshal of the Department of Forestry and Fire Protection, the Division of Occupational Safety and Health of the Department of Industrial Relations, and the Division of Water Quality of the State Water Resources Control Board are made conditions of this certification.

IT IS FURTHER ORDERED that manufacturers of vapor recovery systems and components including ISD systems shall provide a warranty to the initial purchaser. The warranty shall be passed on to each subsequent purchaser within the warranty period. The manufacturer of components listed in Exhibit 1 not manufactured by FFS or Veeder-Root shall provide a warranty to each of their components certified herein. The warranty shall include the ongoing compliance with all applicable performance standards and specifications and shall comply with all warranty requirements in Section 16.5 of the Certification Procedure. Manufacturers of vapor recovery systems and components including ISD systems or other manufacturers may specify that the warranty is contingent upon the use of trained installers.

IT IS FURTHER ORDERED that every certified component manufactured by FFS and Veeder-Root shall be performance tested by the manufacturer as provided in Exhibit 3.

IT IS FURTHER ORDERED that the certified Healy Phase II EVR System Including ISD shall be installed, operated, and maintained in accordance with the ***ARB Approved Installation, Operation, and Maintenance Manual.*** A copy of this Executive Order and the ***ARB Approved Installation, Operation and Maintenance Manual*** shall be maintained at each GDF where a Healy Phase II EVR System Including ISD is installed.

IT IS FURTHER ORDERED that equipment listed in Exhibit 1, unless exempted, shall be clearly identified by permanent identification number showing the manufacturer's name and model number.

IT IS FURTHER ORDERED that any alteration in the equipment parts, design, installation, or operation of the system certified hereby is prohibited and deemed inconsistent with this certification, unless the alteration has been submitted in writing and approved in writing by the Executive Officer or Executive Officer delegate.

IT IS FURTHER ORDERED that the following requirements are made a condition of certification. The owner or operator of the Healy Phase II EVR System Including ISD shall conduct and pass the following tests no later than 60 days after startup and at least once in each twelve month period, using the following test procedures: TP-201.3, ***Determination of 2 Inch WC Static Pressure Performance of Vapor Recovery Systems of Dispensing Facilities*** (March 17,1999); Exhibit 8, ***Required Items in Conducting TP-201.3***; Exhibit 4, ***Determination of Static Pressure Performance of the Healy Clean Air Separator***; Exhibit 5, ***Vapor to Liquid Volume Ratio***; and Exhibit 9 or Exhibit 10, *Veeder-Root or INCON* ***ISD Operability Test Procedures***. Shorter time periods may be specified in accordance with local district requirements. Notification of testing, and submittal of test results, shall be done in accordance with local district requirements and pursuant to policies established by that district. Alternative test procedures, including most recent versions of the test procedures listed above, may be used if determined by the ARB Executive Officer or Executive Officer delegate, in writing, to yield equivalent results.

IT IS FURTHER ORDERED that the following requirements are made a condition of certification. The owner or operator of the Healy Phase II EVR System Including Veeder-Root ISD shall conduct, and pass, the following tests no later than 60 days after startup using Exhibit 7, ***Nozzle Bag Test Procedure***. TP-201.4, ***Dynamic Back Pressure*** (July 3, 2002) shall be conducted in accordance with the conditions listed in item 1 of the Vapor Recovery Piping Configurations section of Exhibit 2. Local districts have the authority to require conducting of Exhibit 5, ***Vapor to Liquid Volume Ratio***, in lieu of TP-201.4, ***Dynamic Back Pressure*** (July 3, 2002) provided that at least 2 gallons of product are introduced into the system through each dispenser riser prior to conducting the test. Notification of testing, and submittal of test results, shall be done in accordance with local district requirements and pursuant to the policies established by that district. Alternative test procedures, including most recent versions of the test procedures listed above, may be used if determined by the ARB Executive Officer or Executive Officer delegate, in writing, to yield equivalent results.

IT IS FURTHER ORDERED that, except as provided above, local districts at their option will specify the testing frequency of the nozzle vapor valves. If nozzle vapor valve tests are required by the district, the test shall be conducted in accordance with Exhibit 7, ***Nozzle Bag Test Procedure***.

IT IS FURTHER ORDERED that the Healy Phase II EVR System Including ISD shall be compatible with gasoline in common use in California at the time of certification. The Healy Phase II EVR System is not compatible with gasoline containing more than 15 percent methanol, 15 percent ethanol, or 15% methyl tertiary butyl ether (MTBE). Any modifications to comply with future California gasoline requirements shall be approved in writing by the Executive Officer or Executive Officer delegate.

IT IS FURTHER ORDERED that the certification of the Healy Phase II EVR System Including ISD is valid through September 1, 2009.

IT IS FURTHER ORDERED that Executive Order VR-202-G issued on June 17, 2008, is hereby superseded by this Executive Order. Healy Phase II EVR System Including Veeder-Root ISD certified under VR-202-A through G may remain in use at existing installations; however, Veeder-Root ISD version 1.00 shall not remain in use after December 15, 2010 and Veeder-Root ISD version 1.01 shall not remain in use after July 1, 2012 for multi-product dispensers with fuel blending. This Executive Order shall apply to new installations or major modifications of Phase II systems with a throughput of greater than 600,000 gallons per year and replacements of Veeder-Root or Incon ISD at existing gasoline dispensing facilities. A new installation or a major modification at a GDF with a throughput of less than or equal to 600,000 gallons per year is not authorized.

Executed at Sacramento, California, this 28th day of August 2008.

William V. Loscutoff, Chief
Monitoring and Laboratory Division

Attachments:

Exhibit 1	Equipment List
Exhibit 2	System Specifications
Exhibit 3	Manufacturer Performance Standards and Specifications
Exhibit 4	Determination of Static Pressure Performance of the Healy Clean Air Separator
Exhibit 5	Vapor to Liquid Volume Ratio
Exhibit 6	Warranty
Exhibit 7	Nozzle Bag Test Procedure
Exhibit 8	Required Items in Conducting TP-201.3
Exhibit 9	Veeder-Root ISD Operability Test Procedure
Exhibit 10	INCON ISD Operability Test Procedure

Executive Order VR-202-H
Healy Phase II EVR System
Including In-Station Diagnostic (ISD) Systems

Exhibit 1
Part 1 - Healy Equipment List

Component	**Manufacturer/Model**
Nozzle	Healy Model 900[1] (Figures 1A-1 and 1A-2)
Clean Air Separator	Healy Model 9961 Clean Air Separator (Figures 1A-3 and 1A-4) Healy Model 9961H Clean Air Separator (Figures 1A-3H and 1A-6)
Inverted Coaxial Hoses	Healy Model 75 Series (3/4" I.D.) (Figures 1A-5, 1A-7 and 1A-8) 75W-XXX-YZYZ where W represents color of hose (varies) Note: Product label will have an "X" in this position for all hose colors XXX represents hose length First two digits for length in feet Last digit - length in tenths of foot Note: Product label will have "XXX" in this position for hose length Y represents hose end type S = Swivel End F = Fixed End Z represents thread type 2 = Healy Straight Thread 3 = Metric Thread 4 = Balance-Type Thread

[1] Nozzle can have either a two position or three position hold open clip (see Figure 1A-1).

Component	Manufacturer / Model
Dispenser Conversion Adaptors (Optional)[2]	
	Healy Model CX6-A (Required on Gasboy, Global Century, Reliance and Select Dispensers) Healy Model CX6-VV1A* Healy Model CX6-VV2A* Healy Model CX6-VV3A EBW Model 303-301-01 (Figures 1A-9 and 1A-10) Note: Items marked with asterisk (*) are no longer manufactured, but may be used for dispenser retrofit.
Reconnectable Breakaway Coupling	
	Healy Model 8701VV (Figures 1A-11 and 1A-12) Healy Model 807 Swivel (Figures 1A-13 and 1A-14)
Flow Limiter[3]	Healy Model 1301 (Figures 1A-15 and 1A-16) Healy Model 1302 (Figures 1A-17 and 1A-18)
Dispenser Vacuum Pump	
	Healy Model VP1000 Vacuum Pump Healy/Franklin Electric Model VP1000 Vacuum Pump (Figure 1A-19)

[2] If optional components are installed or required by regulations of other agencies, the components and model numbers manufactured by Franklin Fueling Systems may be used to facilitate installation. The use of dispenser conversion adaptors not listed above may be used to facilitate installation provided that all applicable performance standards are met.

[3] Flow limiter is mandatory when the flow rate is greater than 10.0 gallons per minute to comply with US EPA requirement. 1301 is used with 8701VV breakaway. 1302 is used with 807 swivel breakaway.

Component	Manufacturer / Model

Dispensers

Note: Unihose dispensers shall be required unless as provided by Section 4.10 of CP-201.

Gilbarco Encore Series[4]

Healy Kit VP1000R[5] or VP1000S[6]

Model #'s	Description:
NAO	Encore 1 Grade Multi-hose
NA1	Encore 2 Grade Multi-hose
NA2	Encore 3 Grade Multi-hose
NA3	Encore 4 Grade Multi-hose
NG0	Encore 3 Grade Single-Hose
NG1	Encore 4 Grade Single-Hose plus 1
NG4	Encore 2 Grade Single-Hose
NJ0	Multi-hose Blender
NJ2	Multi-hose Blender plus 1
NL0 NL1 NL2 NL3	Encore X+1 Blender
NN0 NN1 NN2 NN3	Encore X+0 Blender

GasBoy 9800 Series (Gilbarco)

Healy Kit VP1000M[7]

Model #'s Description:
9852 – Suffix1 Suffix2
9853 – Suffix1 Suffix2
Where:
Suffix1 can be:

A	=	Factory fabrication and assembly modifications to chassis
HC	=	High capacity model
M	=	Manifold supply inlet at the pumping unit inlet
TW1	=	Manifold supply inlet
TW2	=	Two individual supply inlets
X	=	Dispenser supplied by a submersible pump
Q	=	Utilizes an alternate meter and Pump

[4] Encore Dispensers factory equipped with Healy VP1000 will now have an angled (~13°) outlet casting.
[5] Kit used to install Healy components in Encore Balance series dispenser. VP1000R previously sold as equivalent to VP1000L.
[6] Kit used to install Healy components in Encore Assist series dispenser. VP1000S previously sold as equivalent to VP1000K.
[7] Kit used to install Healy components in GasBoy 9800 series dispenser

Component **Manufacturer / Model**

Suffix2 can be:

B	=	Battery back-up for electronics
C	=	Pump Interface
D	=	DC conduit and junction box
F	=	Fuel filter
G	=	Imperial gallons registration
H	=	High hose retriever
I	=	Internal hose retriever
L	=	Lighted panel
N	=	Equipped to handle a long spout nozzle
P	=	Satellite dispenser as part of the unit (for connection to a master pump)
PP	=	Solenoid valves (optional only on pumps)
R	=	Liters registration
S	=	Piping for connection to satellite
SS	=	Stainless steel panels
SSA	=	Equipped with stainless steel doors
SSTS	=	Stainless steel tops and doors
T	=	Mechanical totalizer
U	=	Submersible drive relays
W	=	Heater
Y	=	Vapor recovery ready
Z	=	Front Load Nozzle
2	=	230 VAC/60hz operation
3	=	230 VAC/60hz operation with 380VAC/60hz motor (available on all models except 9852Q)
25	=	230VAC/50hz operation
35	=	230VAC/50hz operation with 380VAC/50hz motor
4	=	RS-485 interface
5	=	50hz operation
7	=	Electronic totalizer activator on both sides
9	=	Provided with 900-R Series TopKat

Component **Manufacturer / Model**

Wayne Harmony Series

Healy Kit VP1000N[8] or VP1000Q[9]

Model #'s Description:
prefix/VXXXYZ/suffix
Where:
prefix = Any number or letter (with a possible "H" for Harmony)
V = Vista
X = Any digit
Y = D or P
D = remote dispenser type for delivering fuel
P = suction pump for delivering fuel
Z = 1, 3, 4, 5, 6, 7 or 8
suffix = D1 or D2, and any combination of number(s) or letter(s)

Wayne Ovation Series

Healy Kit VP1000P[10]

Model #'s Description:
XYZ/ABC
Where:
X = B or R
B = Blended Dispenser
R = Regular Dispenser
Y = Number of hoses per side
1 = one hose per side
2 = two hoses per side
Z = Number of inlets per side
1 = one inlet
2 = two inlets
3 = three inlets
A = Number of grades
1 = one grade
2 = two grades
3 = three grades
4 = four grades
5 = five grades

[8] Kit used to install Healy components to Harmony Balance series dispenser
[9] Kit used to install Healy components to Harmony Assist series dispenser
[10] Kit used to install Healy components to Ovation Balance or Assist series dispenser. VP1000P previously sold as equivalent to VP1000C.

Component **Manufacturer / Model**

B = Number of sides
1 = one side
2 = two sides
C = Number of columns
1 = one column
2 = two columns

Wayne Vista Series

Healy Kit VP1000T[11] or VP1000V[12]

Model #'s Description:
prefix/VXXXYZ/suffix
Where:
Prefix= Any number or letter
V = Vista
X = Any digit
Y = D or P
D = remote dispenser type for delivering fuel
P = suction pump for delivering fuel
Z = 1, 3, 4, 5, 6, 7 or 8
Suffix = D1 or D2, and any combination of number(s) or letter(s)

Wayne Global Century & Select Series[13]

Model #'s Description
3/GABCDE/Suffix
Where:
A = Model Series
2 = Global Century
7 = Select
B = Cabinet Style
2 = Column Style
C = Flow Rate Capacity
0 = Standard Flow
4 = Twin I, Dual Filters

[11] Kit used to install Healy components to 3V Vista series dispenser. VP1000T previously sold as equivalent to VP1000C.
[12] Kit used to install Healy components to 1V and 2V Vista series dispenser. VP1000V previously sold as equivalent to VP1000F.
[13] Dispenser configuration only available for purchase from Dresser Wayne. There is no Kit for retrofit of this dispenser type.

Component **Manufacturer / Model**

D = Number of Hoses & Orientation
- 1 = Single, Island-Oriented
- 2 = Twin I, Island-Oriented
- 3 = Twin II, Island-Oriented
- 7 = Twin I, Lane-Oriented OR Single Side, Lane-Oriented w/ "R" Suffix
- 8 = Twin II, Lane-Oriented

E = Dispenser Type
- D = Dispenser-Remote

Suffix = Any combination of letters or numbers

Wayne Reliance Series[14]

Model #'s /GABCDE/Suffix — Description

Where:

A = Model Series
- 5 = Reliance Mechanical Fleet – Pricing
- 6 = Reliance Mechanical Fleet – Volume Only

B = Cabinet Style
- 2 = Column Style

C = Flow Rate Capacity
- 0 = Standard Flow

D = Number of Hoses & Orientation
- 1 = Single, Island-Oriented
- 2 = Twin I, Island-Oriented
- 3 = Twin II, Island-Oriented

E = Dispenser Type
- D = Dispenser-Remote

Suffix = Any combination of letters or numbers

[14] Dispenser configuration only available for purchase from Dresser Wayne. There is no Kit for retrofit of this dispenser type.

Component	**Manufacturer / Model**
	FFS/Healy Universal Retrofit Manual[15]
Healy Kits	VP1000A[16] VP1000D[17] VP1000G[18] VP1000H[19] VP1000J[20] Z071V[21] Z070E[22] Z008[23] Z009[24]

Table 1
Components Exempt from Identification Requirements

Component Name	Manufacturer	Model Number
Dispenser Kit	Healy	VP1000A & VP1000B VP1000D VP1000G VP1000H VP1000J VP1000M VP1000N VP1000P VP1000Q VP1000R VP1000S VP1000T VP1000V Z008 Z009 Z070E Z071V

[15] Any dispenser not currently listed in Exhibit 1 can be upgraded to Healy EVR using one of the kits listed in this section.
[16] Kit contains Universal Wire Harness for use in any dispenser make or model. For use with any VAC or VDC solenoid valves. VP1000A previously sold as equivalent to VP1000B.
[17] Early Gilbarco Encore 300 Blender Dispensers – 120 VAC valves (mfg. before 04/2003).
[18] Wayne DL Non-Blender Dispensers – 120 VAC valves.
[19] Tokheim Premier C Blender Dispensers – 24 VDC valves.
[20] Early Tokheim Blender Dispensers – Combination 120 VAC & 24 VDC valves.
[21] Universal Vapor Kit.
[22] Universal Electrical Kit.
[23] Standard Low Profile Single Hose Dispenser Retrofit Kit.
[24] Standard Low Profile Dual Hose Dispenser Retrofit Kit.

Executive Order VR-202-H
Healy Phase II EVR System
Including In-Station Diagnostic (ISD) Systems

Exhibit 1

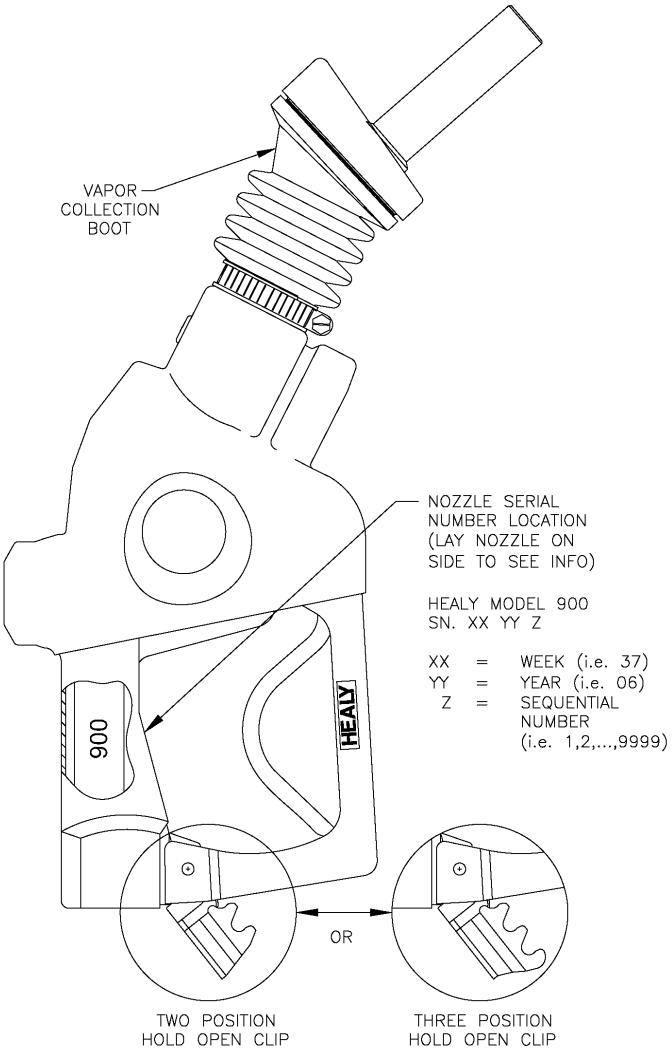

Figure 1A-1
Healy Model 900 EVR Nozzle

Figure 1A-2
Healy Model 900 Nozzle

Executive Order VR-202-H
Healy Phase II EVR System
Including In-Station Diagnostic (ISD) Systems

Exhibit 1
Figure 1A-3
Healy Model 9961 Clean Air Separator

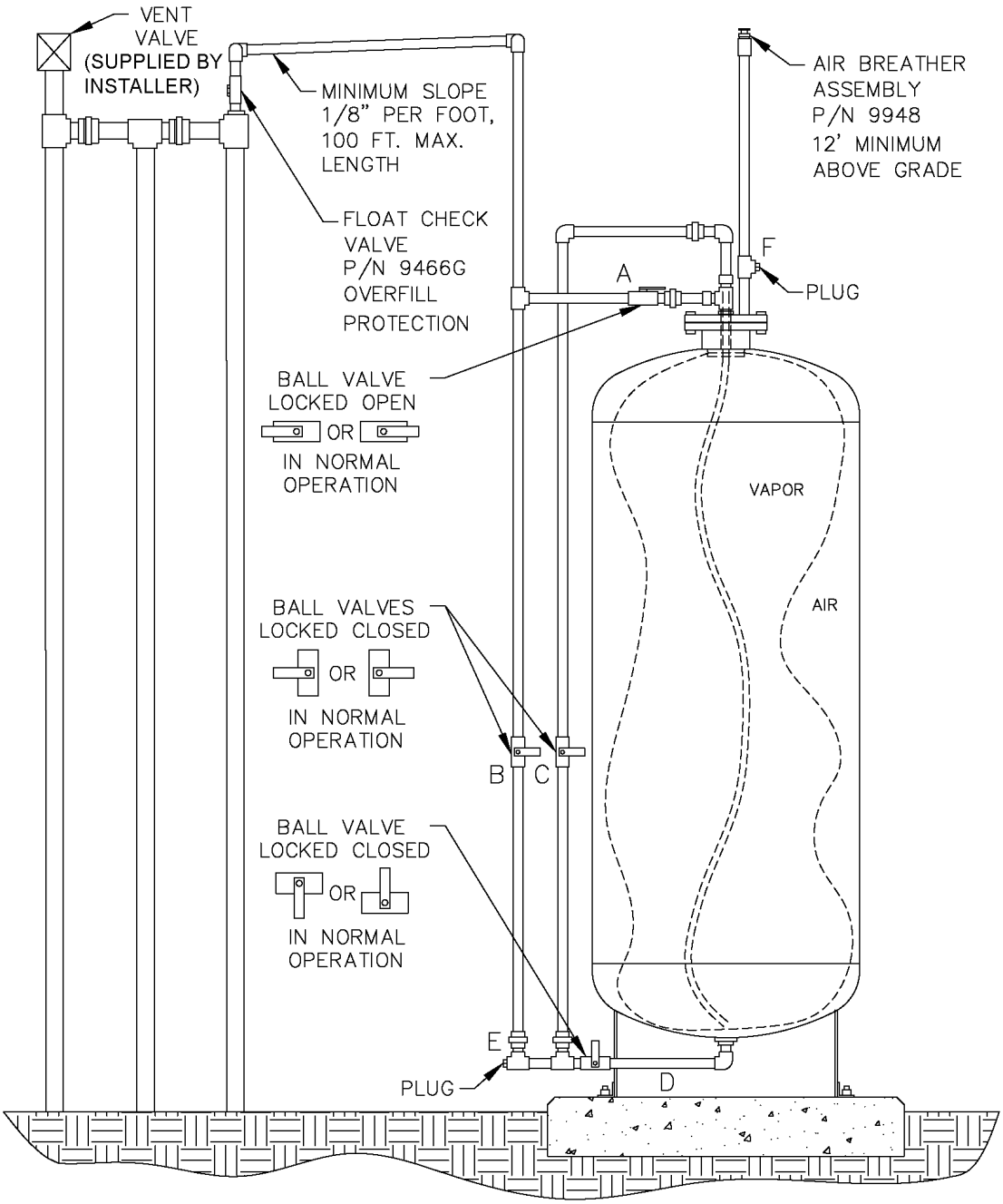

Executive Order VR-202-H
Healy Phase II EVR System
Including In-Station Diagnostic (ISD) Systems

Exhibit 1

Figure 1A-4
Healy Model 9961 Clean Air Separator

Figure 1A-5
Healy Model 75 Series Hose

Executive Order VR-202-H
Healy Phase II EVR System
Including In-Station Diagnostic (ISD) Systems

Exhibit 1
Figure 1A-3H
Healy Model 9961H Clean Air Separator

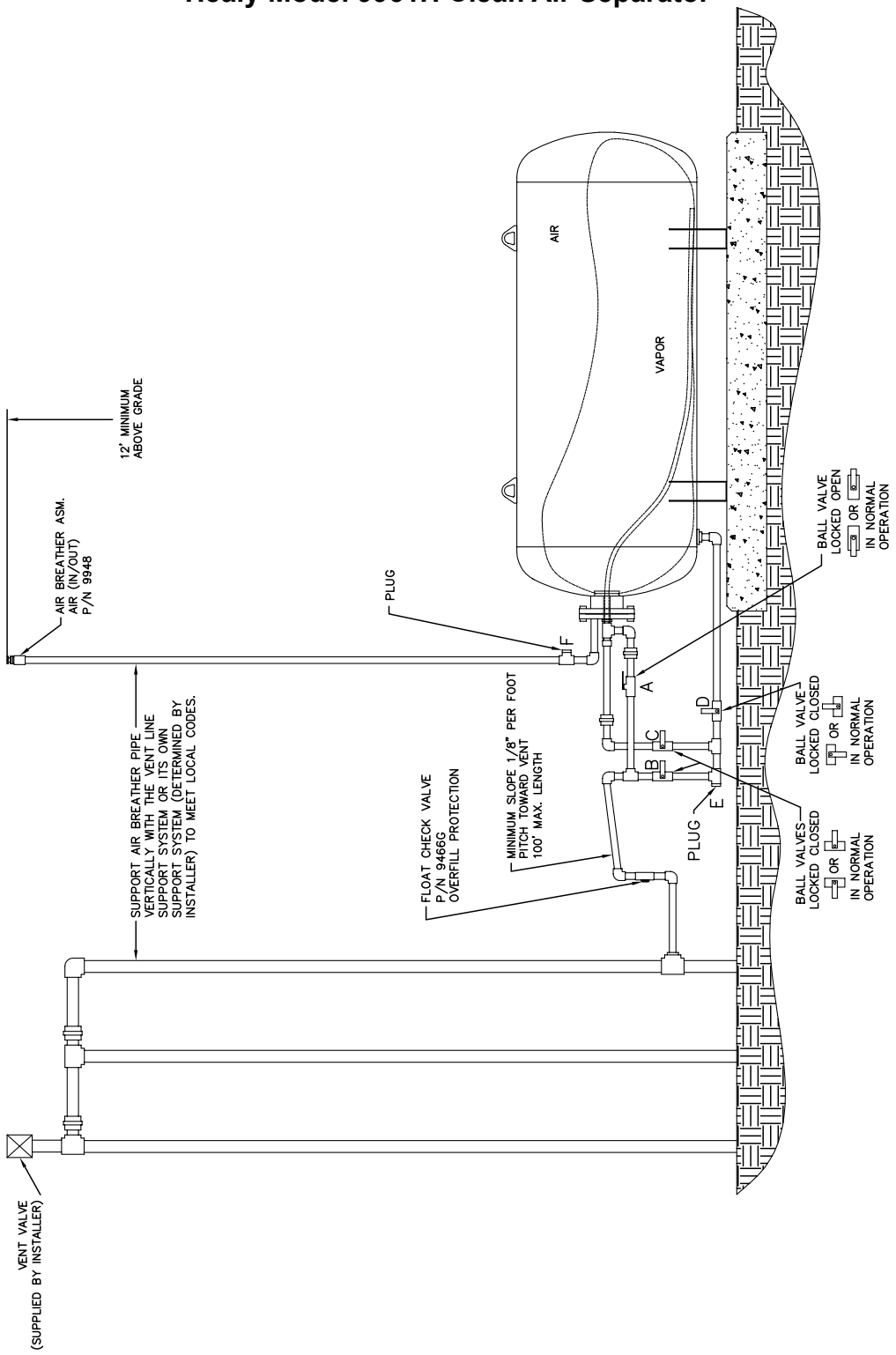

Executive Order VR-202-H
Healy Phase II EVR System
Including In-Station Diagnostic (ISD) Systems

Exhibit 1
Figure 1A-6
Healy Model 9961-H Clean Air Separator

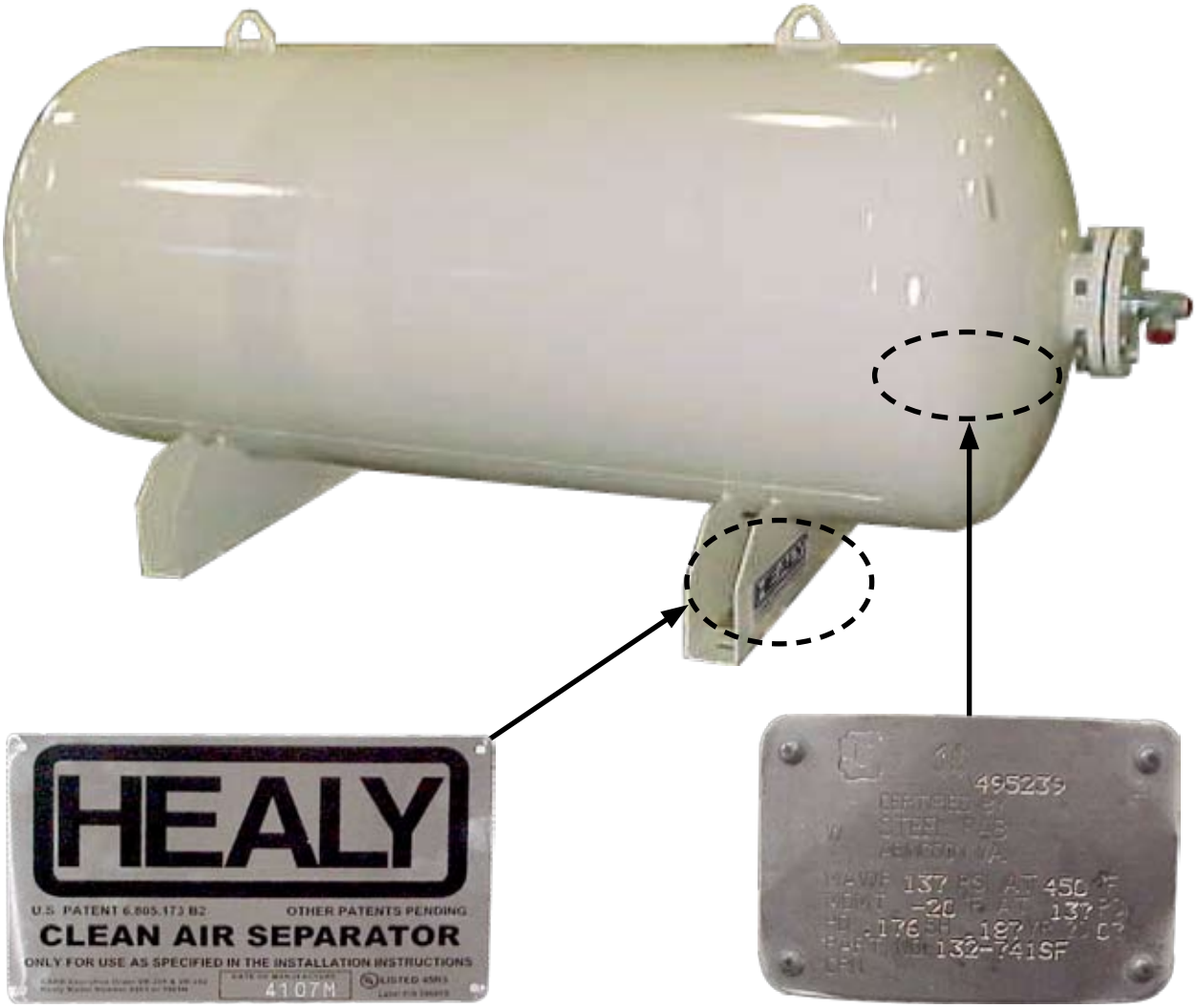

Clean Air Separator Name Plate

Clean Air Separator Data Plate
(not pictured on far side of base)

Executive Order VR-202-H
Healy Phase II EVR System
Including In-Station Diagnostic (ISD) Systems

Exhibit 1
Figure 1A-7
Hanging Hardware Selection Options
Model 8701VV Breakaway and 1301 Flow Limiter

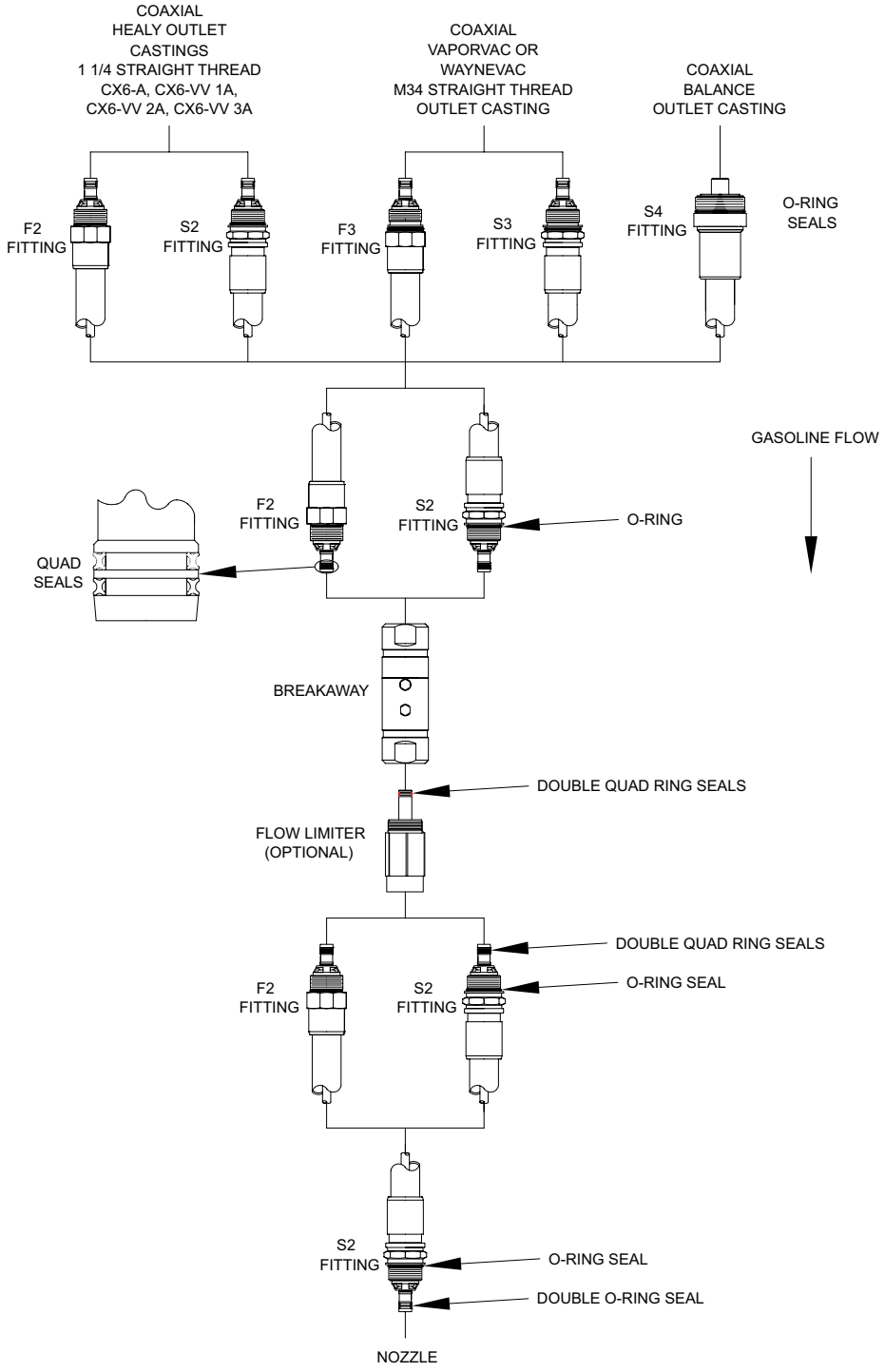

Executive Order VR-202-H
Healy Phase II EVR System
Including In-Station Diagnostic (ISD) Systems

Exhibit 1
Figure 1A-8
Hanging Hardware Selection Options
Model 807 Swivel Breakaway and 1302 Flow Limiter

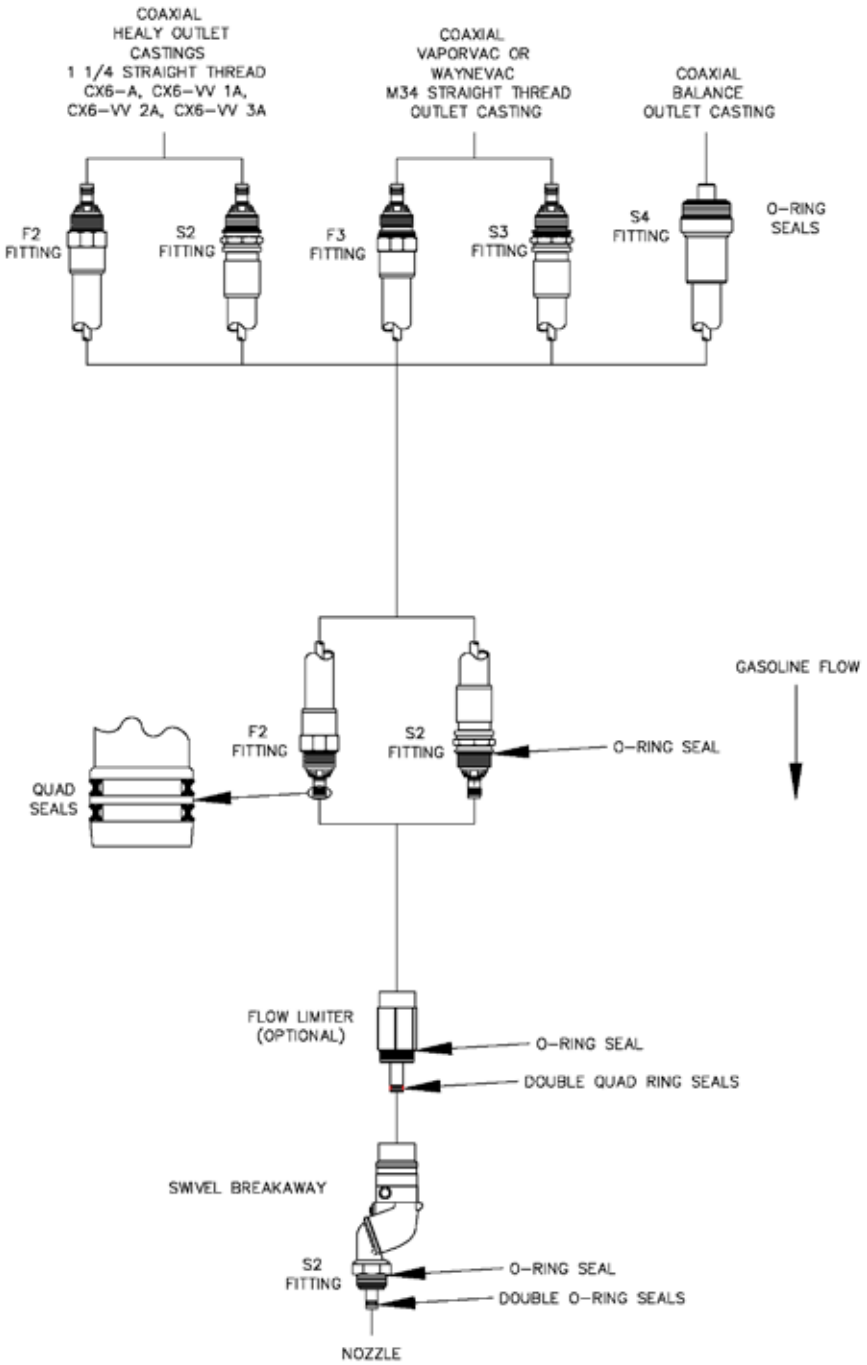

Executive Order VR-202-H
Healy Phase II EVR System
Including In-Station Diagnostic (ISD) Systems

Exhibit 1
Dispenser Conversion Adaptors

Figure 1A-9
Healy Model CX6-A

Figure 1A-9
Healy Model CX6-VV1A

Figure 1A-9
Healy Model CX6-A

Figure 1A-9
Healy Model CX6-VV2A

Executive Order VR-201-H
Healy Phase II EVR System
Not Including ISD

Exhibit 1
Dispenser Conversion Adaptors

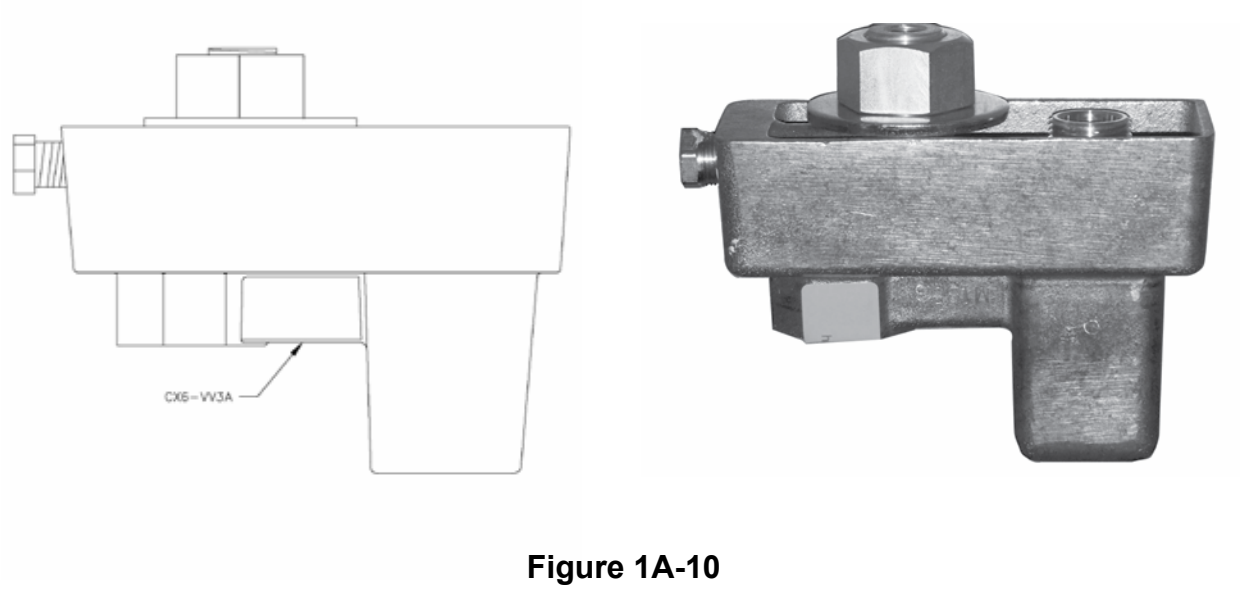

Figure 1A-10
Healy Model CX6-VV3A

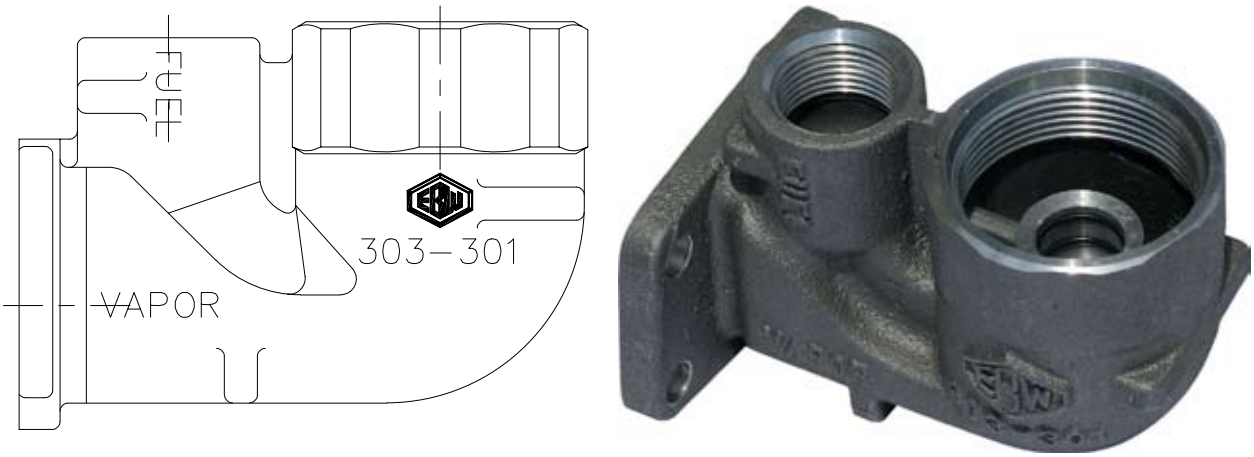

Figure 1A-10
EBW Model 303-301-01

Executive Order VR-202-H
Healy Phase II EVR System
Including In-Station Diagnostic (ISD) Systems

Exhibit 1
Healy Model 8701VV Breakaway

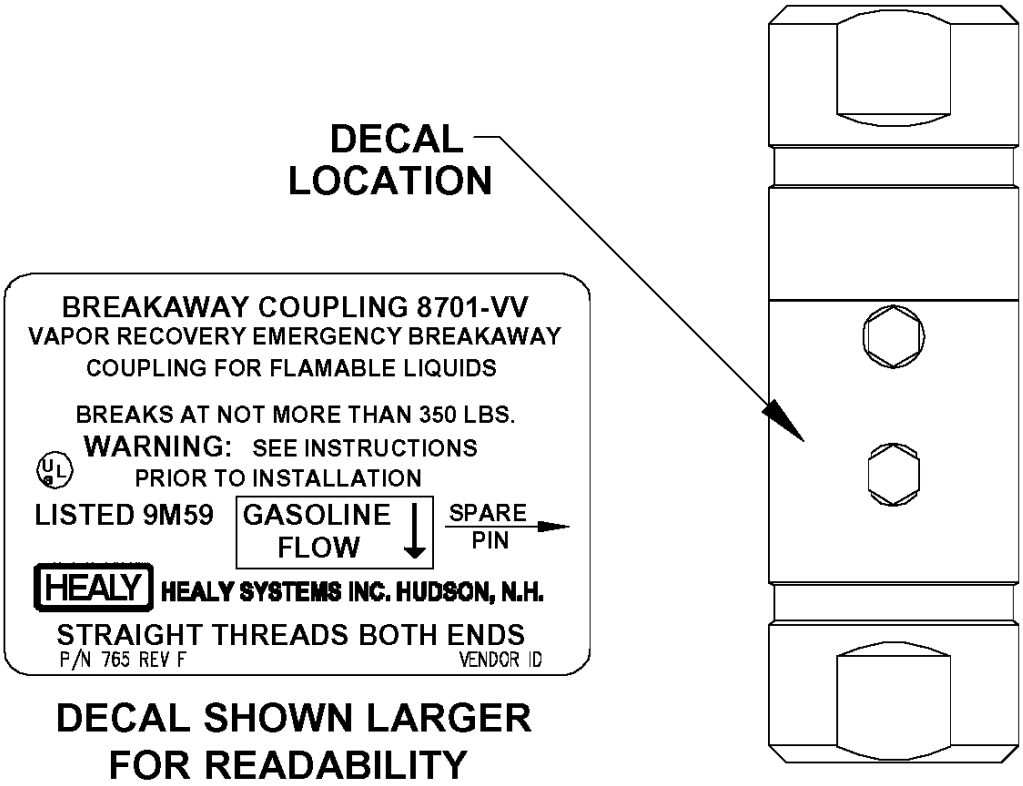

Figure 1A-11

Figure 1A-12

Executive Order VR-202-H
Healy Phase II EVR System
Including In-Station Diagnostic (ISD) Systems

Exhibit 1
Healy Model 807 Swivel Breakaway

Figure 1A-13

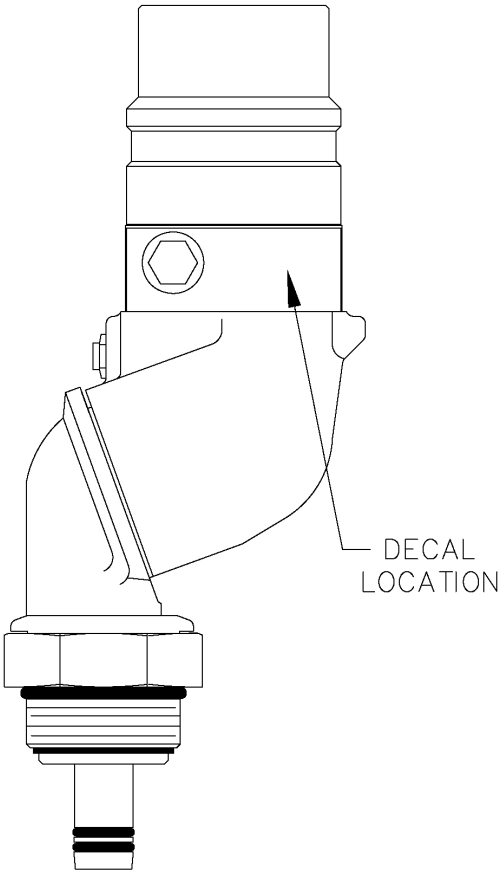

Figure 1A-14

DECAL SHOWN LARGER
FOR READABILITY

Executive Order VR-202-H
Healy Phase II EVR System
Including In-Station Diagnostic (ISD) Systems

Exhibit 1

Figure 1A-15
Healy Model 1301 Flow Limiter

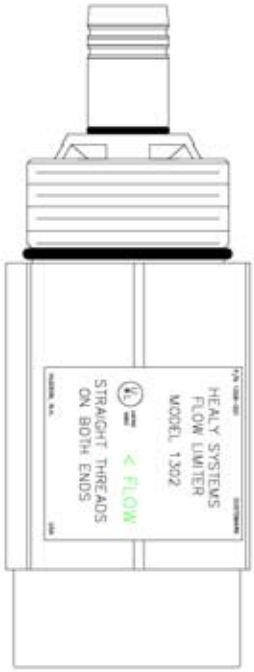

Figure 1A-17
Healy Model 1302 Flow Limiter

Figure 1A-16
Healy Model 1301 Flow Limiter

Figure 1A-18
Healy Model 1302 Flow Limiter

Executive Order VR-202-H
Healy Phase II EVR System
Including In-Station Diagnostic (ISD) Systems

Exhibit 1
Figure 1A-19
Healy Model VP1000 Vacuum Pump

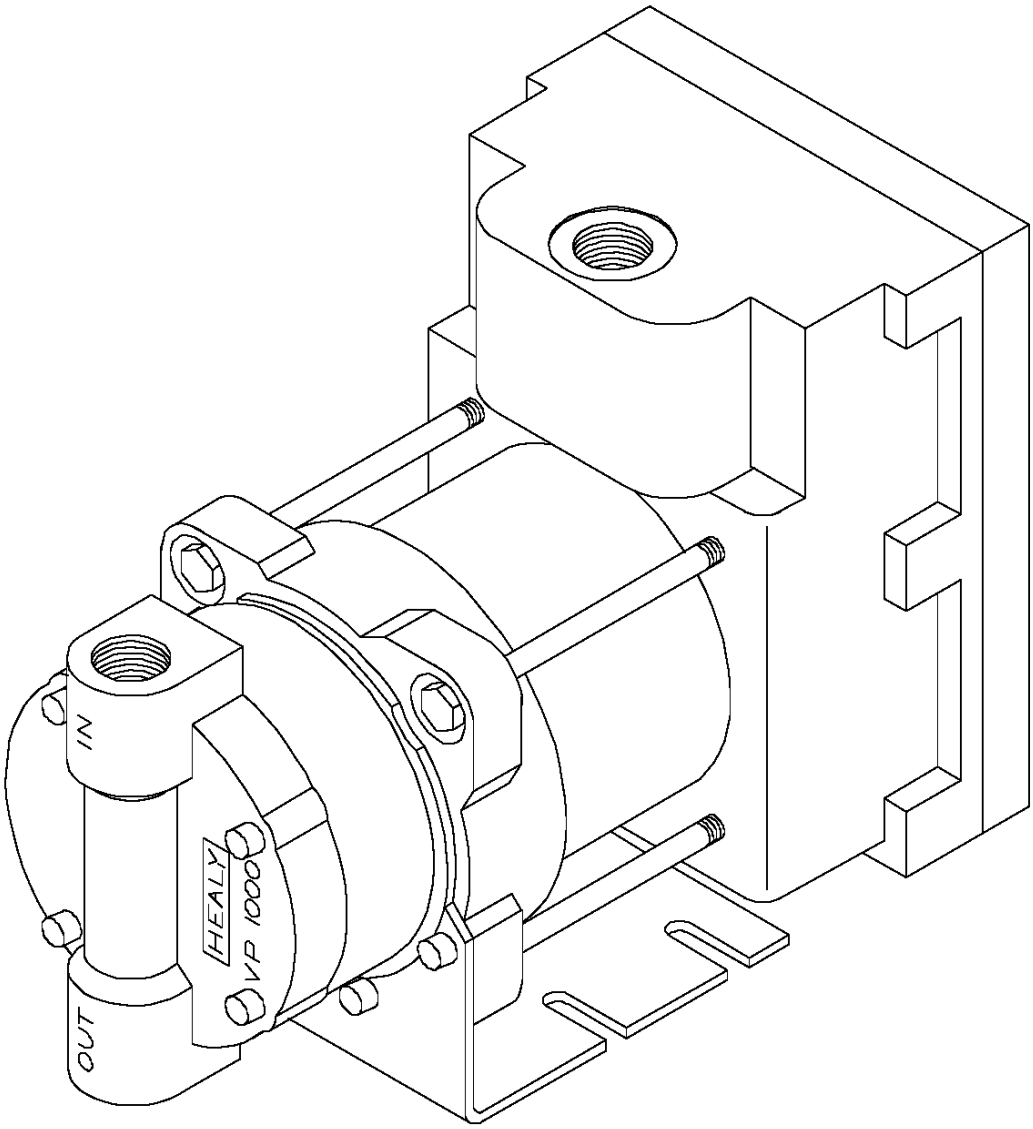

Part II - In-Station Diagnostics
Option I - Veeder-Root Equipment

Component	Manufacturer/Model
TLS Console TLS-350 TLS-350 Plus TLS-350R Red Jacket ProMax Gilbarco EMC Simplicity	Veeder-Root 8482XX-XXX Veeder-Root 8470XX-XXX X = Any digit (Figure 1A-20)
ISD Software	Veeder-Root ISD 1.02
Vapor Flow Meter (1 per Dispenser)	Veeder-Root 331847-XXX X = Any digit (Figure 1A-21)
Vapor Pressure Sensor (1 per GDF)	Veeder-Root 331946-001 (Figure 1A-22)
Dispenser Interface Module (DIM)	Veeder-Root DIM Series (Figure 1A-23)
RS232 Interface Module	Veeder-Root RS232 Interface Module Series (Figure 1A-24)

Executive Order VR-202-H
Healy Phase II EVR System
Including In-Station Diagnostic (ISD) Systems

Exhibit 1
Figure 1A-20
Veeder-Root 8482XX-XXX
Veeder-Root 7470XX-XXX
Standard TLS Console

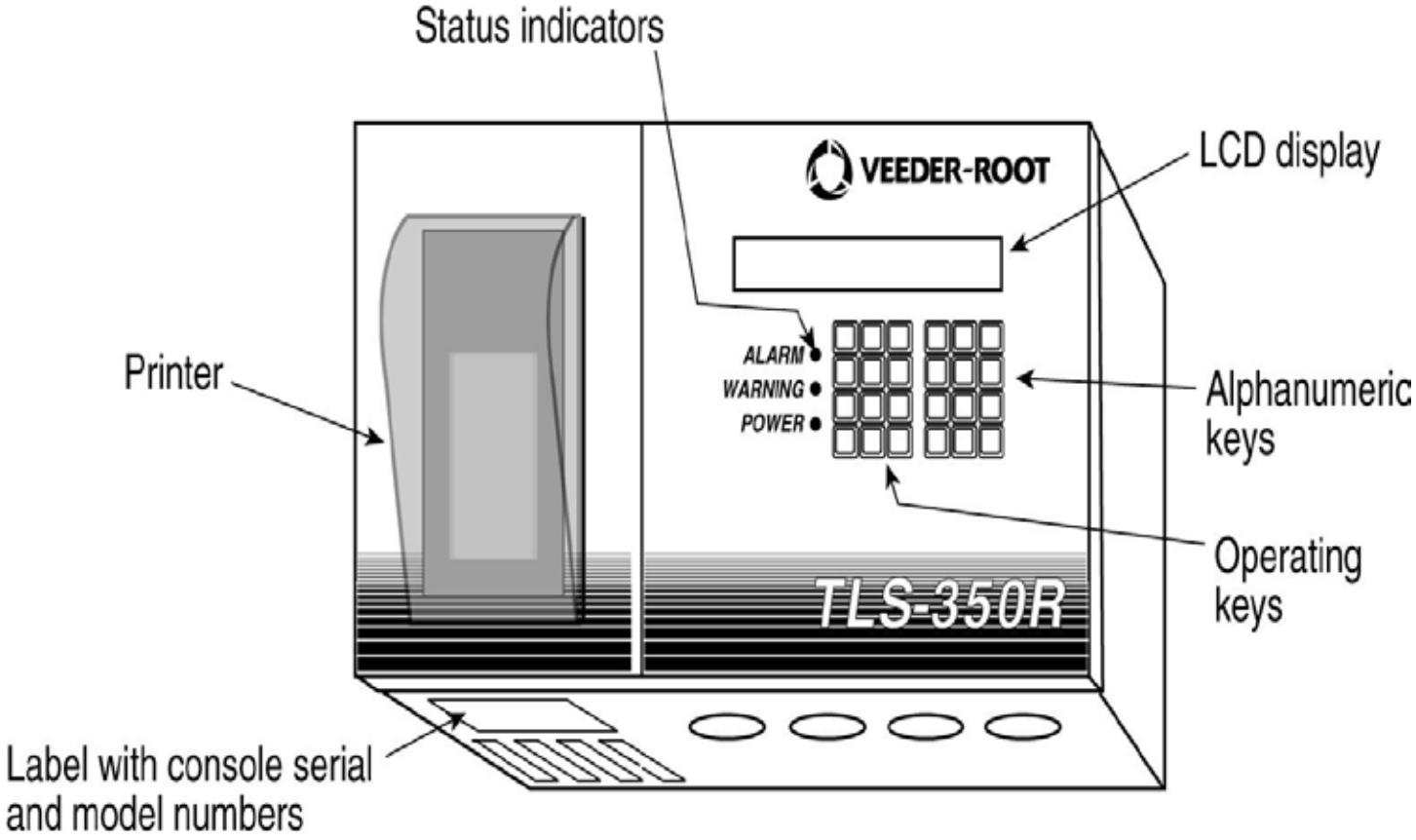

Executive Order VR-202-H
Healy Phase II EVR System
Including In-Station Diagnostic (ISD) Systems

Exhibit 1

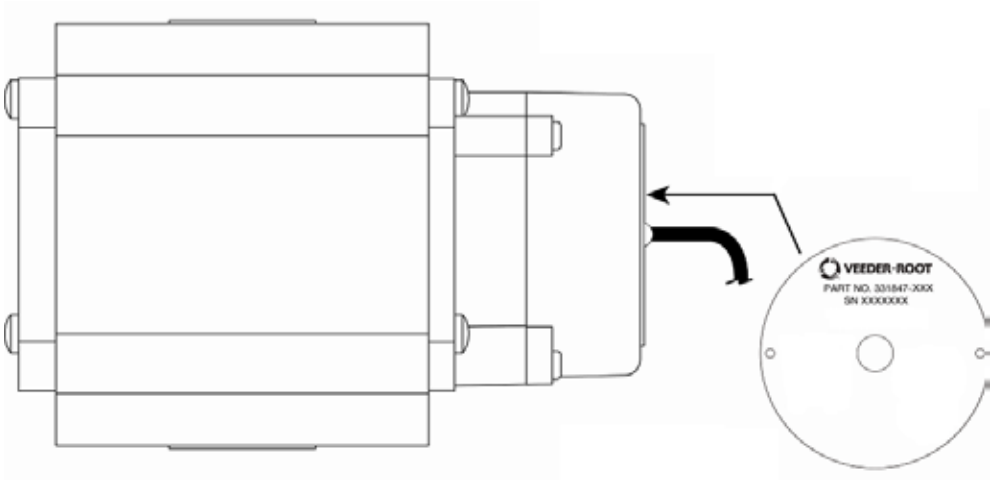

Figure 1A-21
Veeder-Root 331847-XXX
Vapor Flow Meter

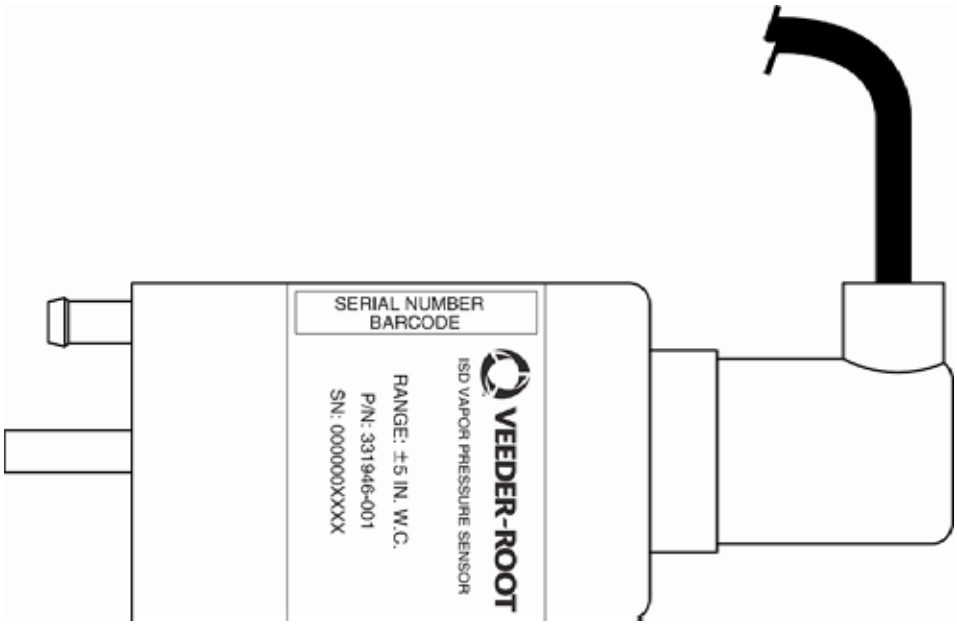

Figure 1A-22
Veeder-Root 331946-001
Vapor Pressure Sensor

Executive Order VR-202-H
Healy Phase II EVR System
Including In-Station Diagnostic (ISD) Systems

Exhibit 1

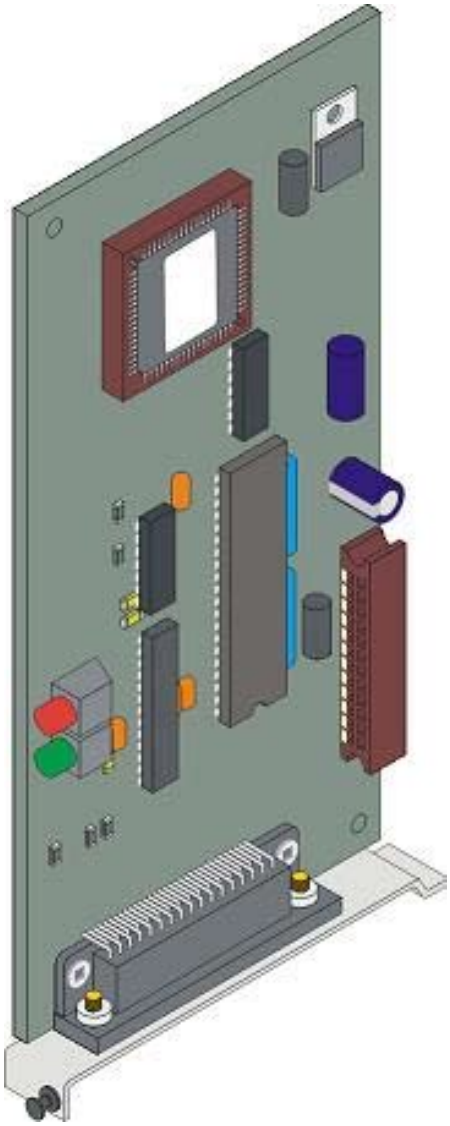

Figure 1A-23
Veeder-Root
Dispenser Interface Module (DIM)

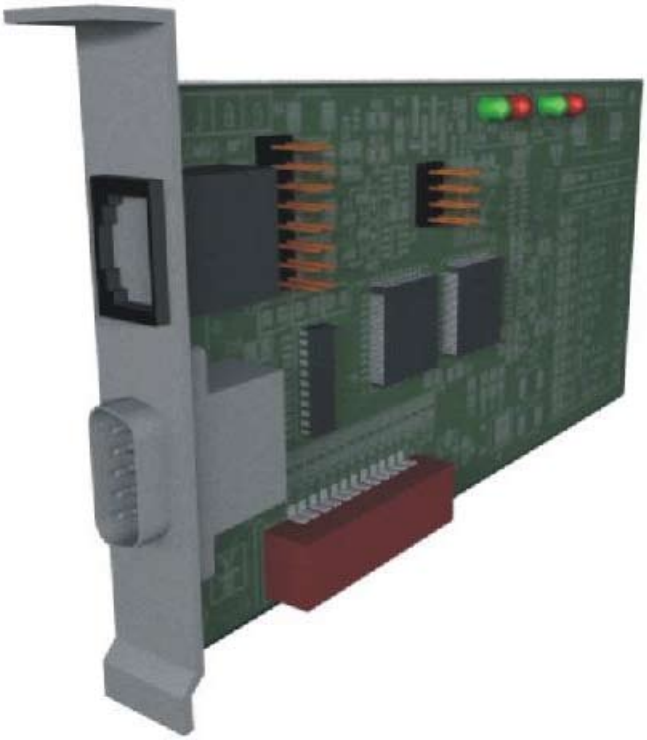

Figure 1A-24
Veeder-Root
RS232 Interface Modules

Option II - INCON Equipment List

Component	Manufacturer/Model
Console TS-EMS TS-550 TS-5000	INCON / TEMSXXXX/YV Where: X represents hardware option (Example: X can be: 'D' for Display 'P' for Printer) Y represents software option (Example: Y can be: 'S' for Secondary Containment Monitoring) V represents Vapor Recovery Monitoring Application INCON / T550XXXX/YYYYV INCON / T5000XXXX/YYYYV Where: X represents hardware option (Example: X can be: 'D' for Display 'P' for Printer) Y represents software option (Example: Y can be: 'T' for Tank Testing) V represents Vapor Recovery Monitoring Application (Figure 1A-25) Note: 1. All consoles come standard with RS-232 (COMM 1) and Ethernet ports for data access.
Vapor Recovery Monitoring (VRM) Software	INCON / TS-VRM Version 1.1.0
Vapor Flow Meter (1 per Dispenser)	INCON TS-VFM (Figure 1A-26)
Vapor Pressure Sensor (1 per GDF)	INCON TS-VPS (Figure 1A-27)
Data Transfer Unit (Optional)[1] (1 per dispenser and 1 per GDF)	INCON TS-DTU/P (Figure 1A-28)
Dispenser Retrofit Kit (Optional)[1] (1 per dispenser with DTU)	INCON TS-DRK

[1] Optional installation method for the replacement of dedicated wires to VFM and VPS. Refer to the IOM for more information

Executive Order VR-202-H
Healy Phase II EVR System
Including In-Station Diagnostic (ISD) Systems

Exhibit 1
Figure 1A-25
INCON TEMSXXXX/YV
INCON T550XXXX/YYYYV
INCON T5000XXXX/YYYYV

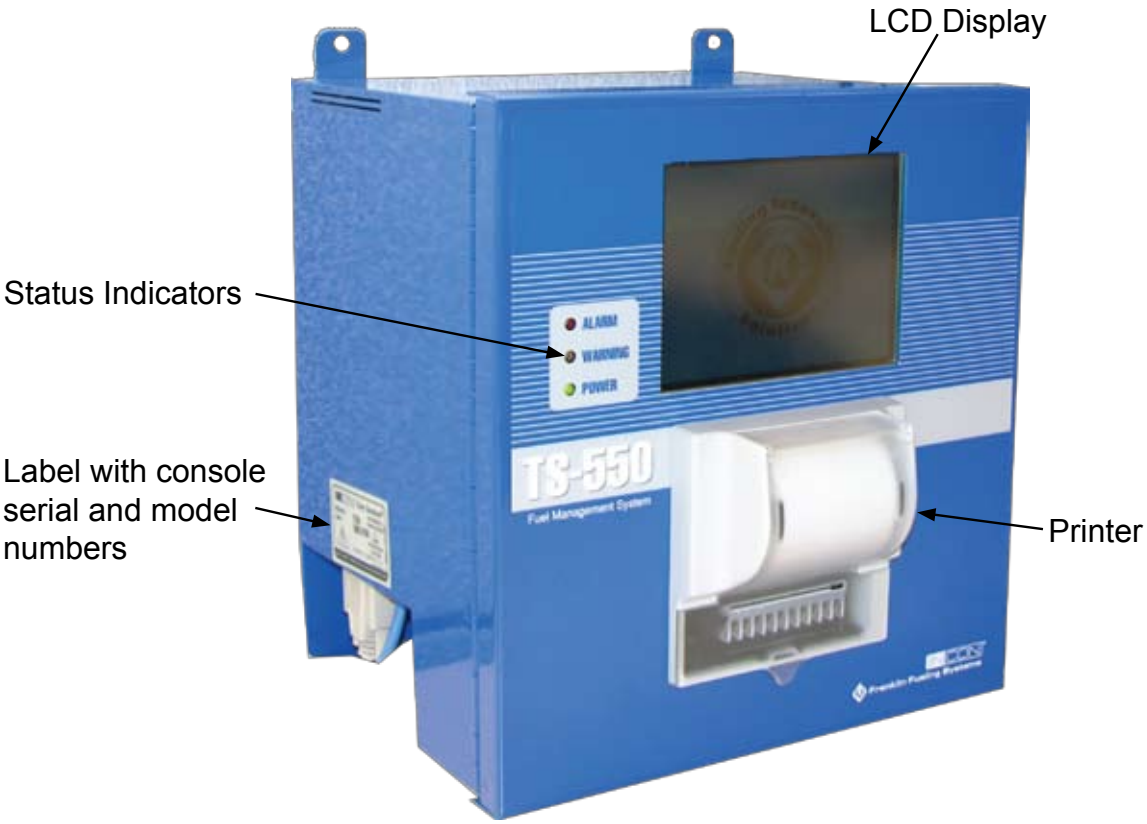

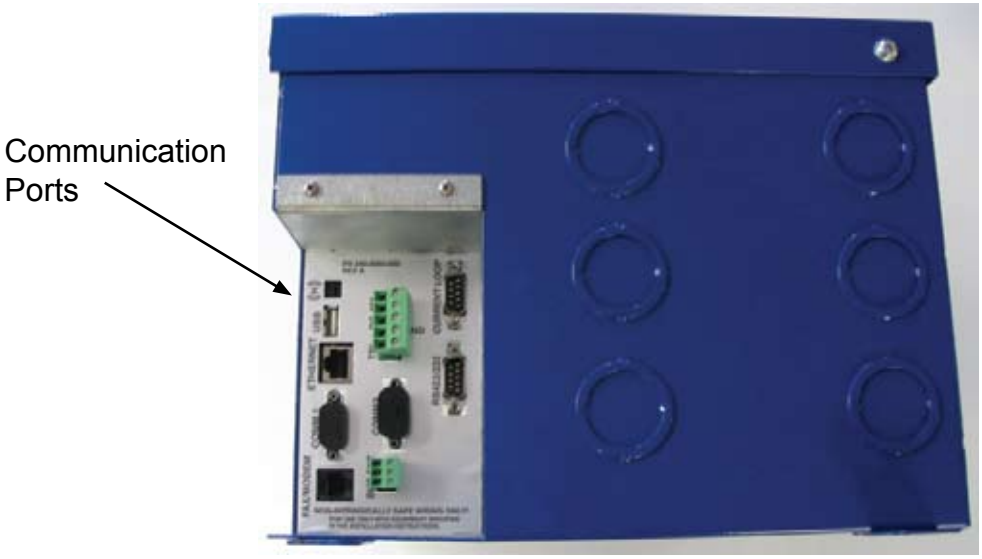

Executive Order VR-202-H
Healy Phase II EVR System
Including In-Station Diagnostic (ISD) Systems

Exhibit 1

Figure 1A-26
INCON TS-VFM
Vapor Flow Meter

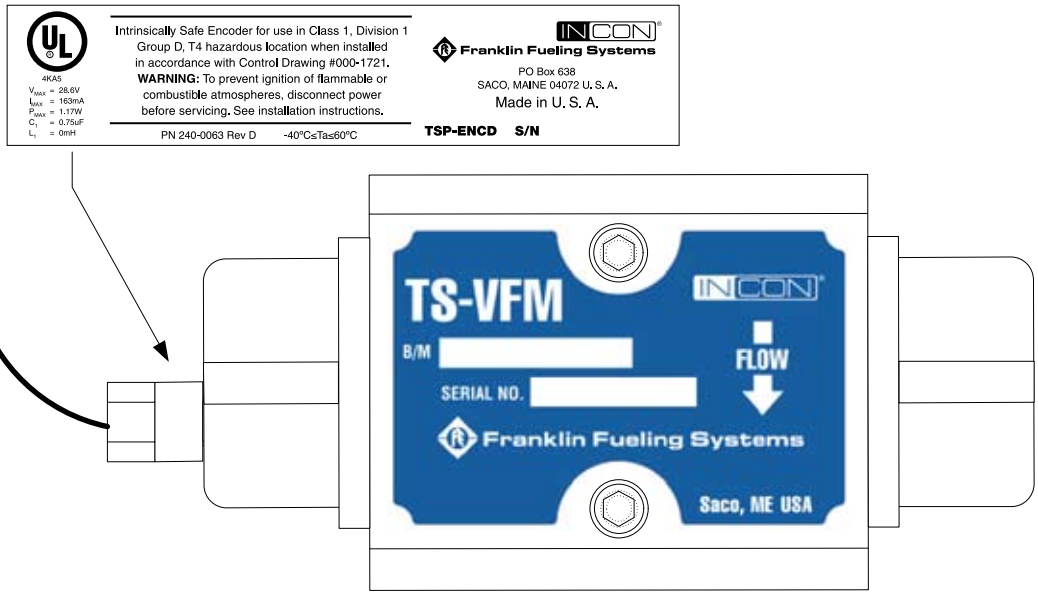

Figure 1A-27
INCON TS-VPS
Vapor Pressure Sensor

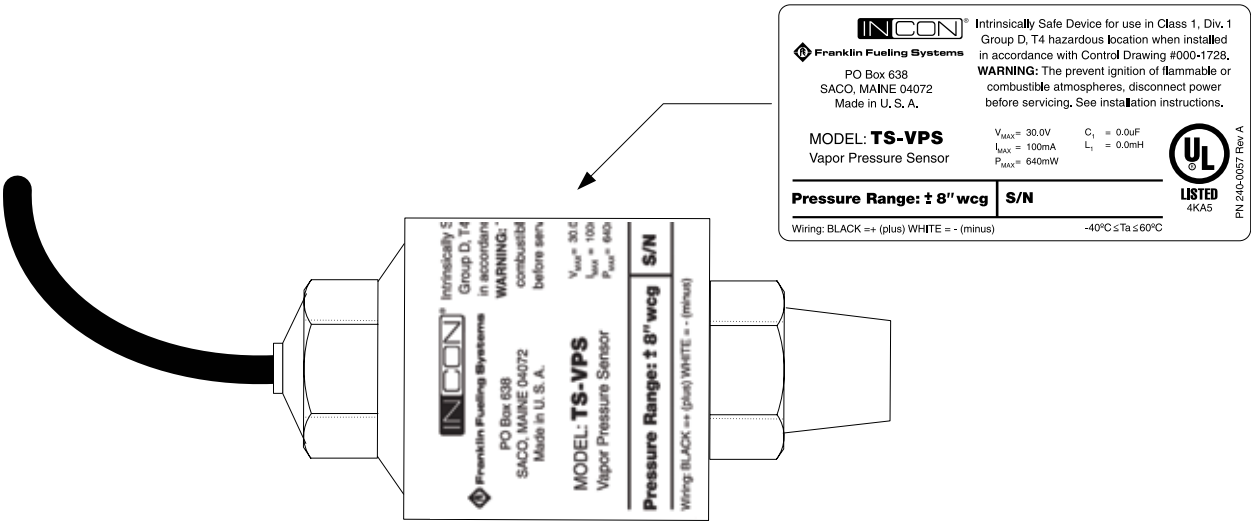

Executive Order VR-202-H
Healy Phase II EVR System
Including In-Station Diagnostic (ISD) Systems

Exhibit 1
Figure 1A-28
INCON TS-DTU/P
Data Transfer Unit

Label with DTU Serial
Number and ID Number

Executive Order VR-202-H
Healy Phase II EVR System
Including In-Station Diagnostics (ISD) Systems

Exhibit 2
Part I - Healy EVR System Specifications

This exhibit contains the installation, maintenance and compliance standards and specifications that apply to the Healy Phase II EVR System Including In-Station Diagnostics (ISD) Systems installed in a gasoline dispensing facility. All components must be installed in accordance with the specifications in the **ARB Approved Installation, Operation and Maintenance Manual**. Installation, maintenance and repair of system components, including removal and installation of such components in the course of any required tests, shall be performed by technicians certified by the appropriate manufacturer. Additional certifications may be required in accordance with local district requirements. Provided that there are no other local district requirements, a GDF Owner / Operator can remove and install nozzles, curb hoses, breakaways, flow limiters and whip hoses without a manufacturer certification.

Nozzle

1. A vapor collection boot shall be installed on the nozzle at the base of the spout, as shown in **Figure 2B-1**.

2. The Healy Model 900 nozzle has an integral vapor valve which prevents the loss of vapor from the underground storage tanks, ensures proper operation of the system and prevents the ingestion of air into the system. Any dispenser that has a nozzle installed that is determined to have a defective vapor valve, as described in items 2.1 or 2.2 below, shall be immediately removed from service (including nozzle(s) on both sides of dispenser) and a call for repair made immediately.

   2.1. The maximum allowable leak rate for the nozzle vapor path, as determined by TP-201.2B, shall not exceed the following:

   0.038 cubic feet per hour (CFH) at a pressure of two inches water column (2.00” wc), and
   0.10 CFH at a vacuum of one hundred inches water column (-100.00” wc)

   2.2. Verification of the integrity of the vapor valve can be performed on installed nozzles using the nozzle bag test procedure in Exhibit 7.

Vapor Collection

1. The V/L ratio of the system shall be **1.05 plus or minus 0.10 (0.95 to 1.15)**, measured at a flow rate between six and ten gallons per minute (6.0 – 10.0 gpm). *Any fueling point whose V/L ratio is determined to be at or below 0.80 shall be deemed defective and removed from service.* The V/L ratio shall be determined by using the test procedure in Exhibit 5 with the shut-off port excluded, or with an ARB approved alternate test procedure. See Section 7 of Exhibit 5 for guidance on V/L adjustment.

2. Inoperative vapor pumps, as determined by the ***ARB Approved Installation, Operation and Maintenance Manual***, constitute a defect.

3. For unihose dispensers, any modifications or repairs to the nozzle, hanging hardware or vacuum pump done to bring one fuel grade V/L into compliance at a fueling point invalidates the results of any previous fuel grade(s) tested before the alteration. All fuel grades at that fueling point shall be tested again to verify compliance.

Inverted Coaxial Hoses

1. The maximum length of the hose assembly, including hose adaptor, whip hose, breakaway, flow limiter (optional) and inverted coaxial hose, measured from the base of the nozzle to the end of dispenser adapter or dispenser, as appropriate, shall be no more than twenty (20) feet.

2. Any hose configuration is allowed.

Breakaway Couplings

1. Testing is required after reconnecting the breakaway to ensure proper operation and no observed leaks. The procedure for reconnecting breakaway and fueling point testing after a drive-off, referenced in Section 1.4 of Healy Systems Scheduled Maintenance, shall be conducted to verify that breakaway, hose and nozzle are operating properly after a drive-off.

Flow Limiters

1. Flow limiter is mandatory when the flow rate is greater than 10.0 gallons per minute to comply with U.S. EPA requirement.

Clean Air Separator Pressure Management System

1. The Clean Air Separator is a passive gasoline storage tank ullage pressure management system, with no electrical requirements. The Clean Air Separator vapor integrity shall be evaluated using the test procedure outlined in Exhibit 4 of this Executive Order.

    a. A Clean Air Separator that fails the leak decay test outlined in Exhibit 4 shall be considered a defect.

    b. Unless there is maintenance or testing being conducted on the Clean Air Separator, the four ball valves shall be locked in the positions shown in **Figure 2B-2** or **2B-2H** for normal Clean Air Separator operation. Figure 2B-2 applies to vertical CAS installations and Figure 2B-2H applies to horizontal CAS installations. A Clean Air Separator that is not in the proper operating configuration shall be considered a defect.

2. The Clean Air Separator shall be installed within 100 feet from the vent line(s), and the associated piping shall be sloped 1/8" per foot minimum toward the vent line(s).

Pressure/Vacuum Vent Valves for Gasoline Storage Tank Vents

1. All P/V vent valves shall be an ARB-certified P/V vent valve for a Phase I system.

2. At least one pressure/vacuum (P/V) vent valve shall be installed on each gasoline storage tank vent. The maximum number of P/V vent valves allowed and P/V vent valve performance specifications are listed in the applicable Phase I EVR Executive Order. Vent lines may be manifold to minimize the number of P/V vent valves and potential leak sources, provided the manifold conforms to all applicable fire regulations. At least one P/V vent valve shall be installed on vents if a manifold is incorporated. **Figure 2B-3** or **2B-3H** shows a typical manifold configuration for a single P/V vent valve with the Clean Air Separator. If two or more P/V vent valves are desired, they shall be installed in parallel, so that each can serve as a backup to the other if one should fail to open properly. **Figure 2B-4** or **2B-4H** shows a typical manifold configuration for two P/V vent valves installed in parallel with the Clean Air Separator. **Figure 2B-5** or **2B-5H** shows a typical manifold configuration for three P/V vent valves installed in parallel with the Clean Air Separator. **Figure 2B-6** or **2B-6H** shows a typical configuration for a P/V vent valve mounted on a single 3" vent line with the Clean Air Separator. Figures 2B-3, 2B-4, 2B-5 and 2B-6 apply to vertical CAS installations. Figures 2B-3H, 2B-4H, 2B-5H and 2B-6H apply to horizontal CAS installations.

Vapor Recovery Piping Configurations

NOTE: Vapor return piping shall meet the piping requirements specified in section 4.11 of CP-201.

1. Vapor Return and Vent Lines

   a. For facilities installed on or after April 1, 2003, all vapor return and vent lines shall be a minimum nominal internal diameter of 2 inches from the dispensers or the vent stacks to the first manifold. All lines after the first manifold and back to the underground storage tank shall have a minimum nominal internal diameter of 3 inches.

      Note: Facilities permitted by a local district prior to April 1, 2003 shall be required to meet the three inch diameter standard only upon facility modification which involves the addition, replacement, or removal of 50 percent or more of the buried vapor piping.

After backfilling the vapor return and vent lines, the maximum pressure drop shall not exceed 0.5 inches WC at 60 cubic feet per hour as determined by TP-201.4, Dynamic Backpressure. The pressure drop shall be measured from the dispenser riser to the UST with pressure/vacuum vent valves installed and with the poppeted Phase I vapor connection open.

b. For existing installations, the maximum pressure drop through the system shall not exceed 0.5 inches WC at 60 cubic feet per hour as determined by TP-201.4, Dynamic Backpressure. The pressure drop shall be measured from the dispenser riser to the UST with the pressure/vacuum vent valves installed and with the poppeted Phase I vapor connection open.

Note: The V/L test from Exhibit 5 may be used to verify proper operation of the system, in lieu of measuring the pressure drop through the lines, provided that at least two gallons of product are introduced into the system through each dispenser riser, prior to the test.

2. All vapor return lines shall have a minimum slope of 1/8 inch per foot from the dispenser riser to the riser of the UST. A slope of 1/4 inch or more per foot is recommended wherever feasible. The vapor return path from any dispenser riser to the underground storage tank shall be free of liquid or fixed blockage.

3. The dispenser shall be connected to the riser with either flexible or rigid material that is listed for use with gasoline. The dispenser-to-riser connection shall be installed so that any liquid in the lines will drain toward the gasoline storage tank. The internal diameter of the connector, including all fittings, shall not be less than one-half inch (1/2”).

   Note: The dispenser-to-riser connection is defined as the piping connection between the outlet of the vapor flow meter and the inlet of the dispenser riser. A vapor shear valve may also be part of the riser connection.

4. There is no length restriction for the vapor return piping of the system as long as the system complies with the maximum pressure drop requirement of Item 1 (or the V/L option).

5. No product shall be dispensed from any fueling point at a GDF installed with the Healy Phase II EVR System Including In-Station Diagnostics (ISD) Systems if there is a vapor line that is disconnected and open to the atmosphere.

6. No liquid condensate traps are allowed with this system.

Dispenser Vapor Piping

1. Any dispenser with a dispenser piping test valve in the closed position shall be considered a defect.

2. The ball valve shall be installed between the test port and the vacuum pump. The ball valve and test port shall be located on the inlet side of the vacuum pump.

3. If the vapor flow meter is installed below the vapor shear valve, then a “Y” fitting for introducing liquid shall be installed below the vapor flow meter.

4. The vapor flow meter shall be installed on the down stream side of the vacuum pump.

5. The Vapor Pressure Sensor shall be installed into one of the dispensers at the GDF located closest to the underground storage tanks (If a row of dispensers are equal distance from the gasoline tank pad and within 10’ of each other, any dispenser can be used).

In-Station Diagnostics

Veeder-Root In-Station Diagnostics

1. The gasoline dispensing facility operator/owner shall comply with local district requirements, if any, following a warning by the Veeder-Root In-Station Diagnostics (ISD) system and a shut down of the submersible pumps to all gasoline tanks by the ISD systems.

2. Suggested Troubleshooting, found in Table 5-1 of the Veeder-Root In-Station Diagnostics ISD) Install, Setup, and Operation Manual (ARB Approved Installation, Operation, and Maintenance Manual), recommends that certain tests be conducted to verify the cause of the ISD warning or failure alarms. Districts may require that these tests or other tests specified by the districts be conducted in response to the ISD alarms.

INCON Vapor Recovery Monitoring

1. The gasoline dispensing facility operator/owner shall comply with local district requirements, if any, following a warning by the INCON Vapor Recovery Monitoring system and a shut down of individual dispensers for all gasoline products by the vapor recovery.

2. Suggested Troubleshooting, found in Appendix A of the INCON Vapor Recovery Monitoring Install, Setup, and Operation Manual (ARB Approved Installation, Operation, and Maintenance Manual), recommends that certain tests be conducted to verify the cause of the warning or failure alarms. Districts may require that these tests or other tests specified by the districts be conducted in response to the monitoring system alarms.

Phase I System

1. The Phase I system shall be an ARB-certified system that demonstrates compliance with the static pressure decay test criteria contained in the latest version of TP-201.3.

Maintenance and Alarm History Records

1. Each GDF operator/owner shall keep records of maintenance performed at the facility. Such records shall be maintained on site or in accordance with district requirements or policies. The records shall include the maintenance or test date, repair date to correct test failure, maintenance or test performed, affiliation, telephone number, name and Certified Technician Identification Number of individual conducting maintenance or test. Additional information may be required in accordance with local district requirements.

   Each GDF operator/owner shall keep records of all alarms detected by the ISD system. Alarm History records shall be maintained on site or in accordance with district requirements or policies. The records shall include the alarm date, the nature of the alarm, type of test and test date to verify the validity of ISD alarm, maintenance or repair date to correct the cause of the alarm, maintenance or repair performed to correct the cause of the alarm, affiliation, telephone number, name and Certified Technician Identification Number of individual conducting maintenance or test. Additional information may be required in accordance with local district requirements**.**

   An example of a GDF Maintenance and Alarm History Record is shown in **Figure 2B-15**.

2. Maintenance shall be conducted in accordance with Healy Systems Scheduled Maintenance document in ***ARB Approval Installation, Operation and Maintenance Manual***.

3. Reconnection of breakaways shall be included in the maintenance records.

Executive Order VR-202-H
Healy Phase II EVR System
Including In-Station Diagnostic (ISD) Systems

Exhibit 2
Figure 2B-1
Vapor Boot for Healy 900 Nozzle

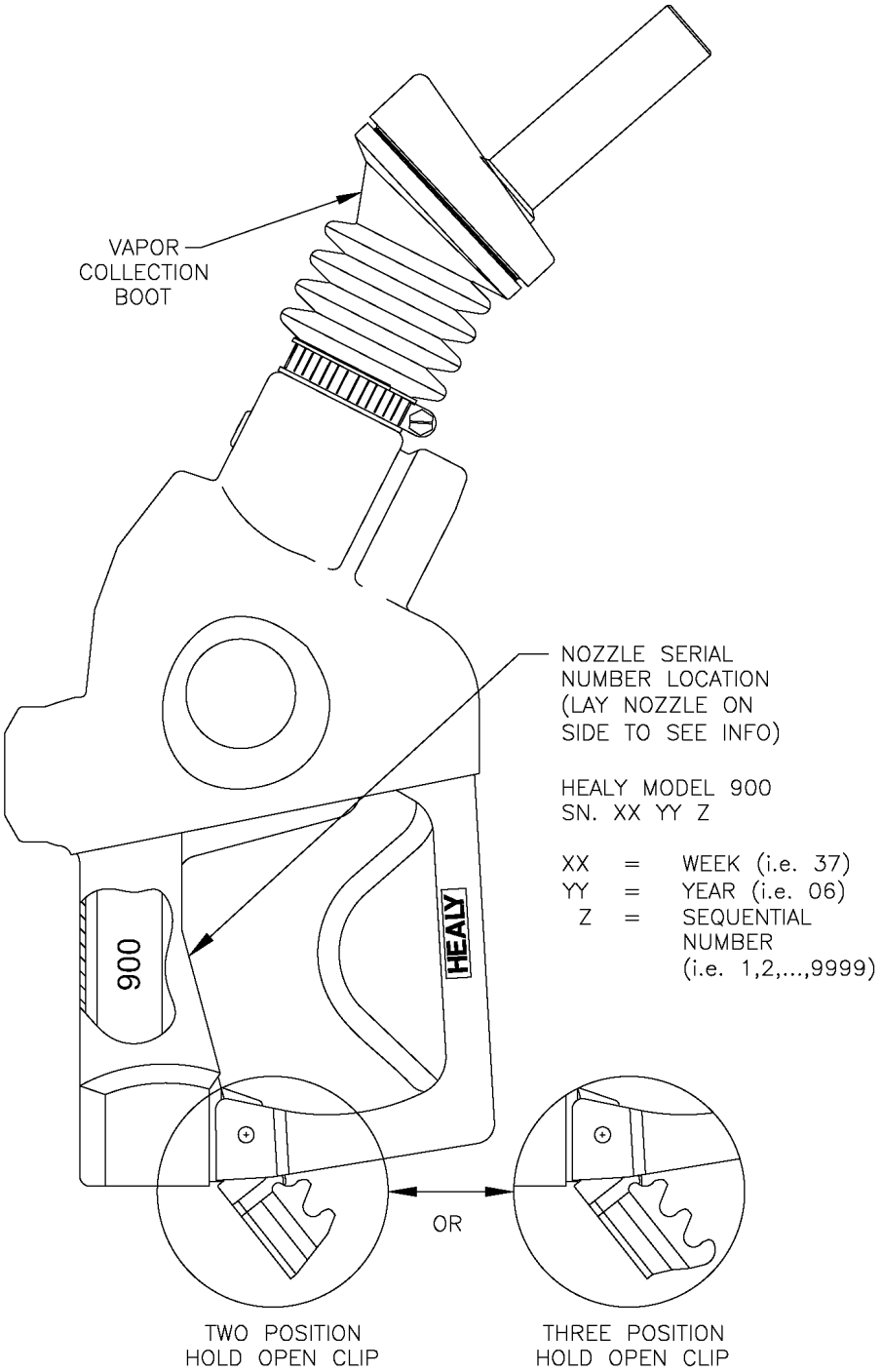

Executive Order VR-202-H
Healy Phase II EVR System
Including In-Station Diagnostics (ISD) Systems

Exhibit 2
Figure 2B-2
Clean Air Separator Normal Operation Configuration

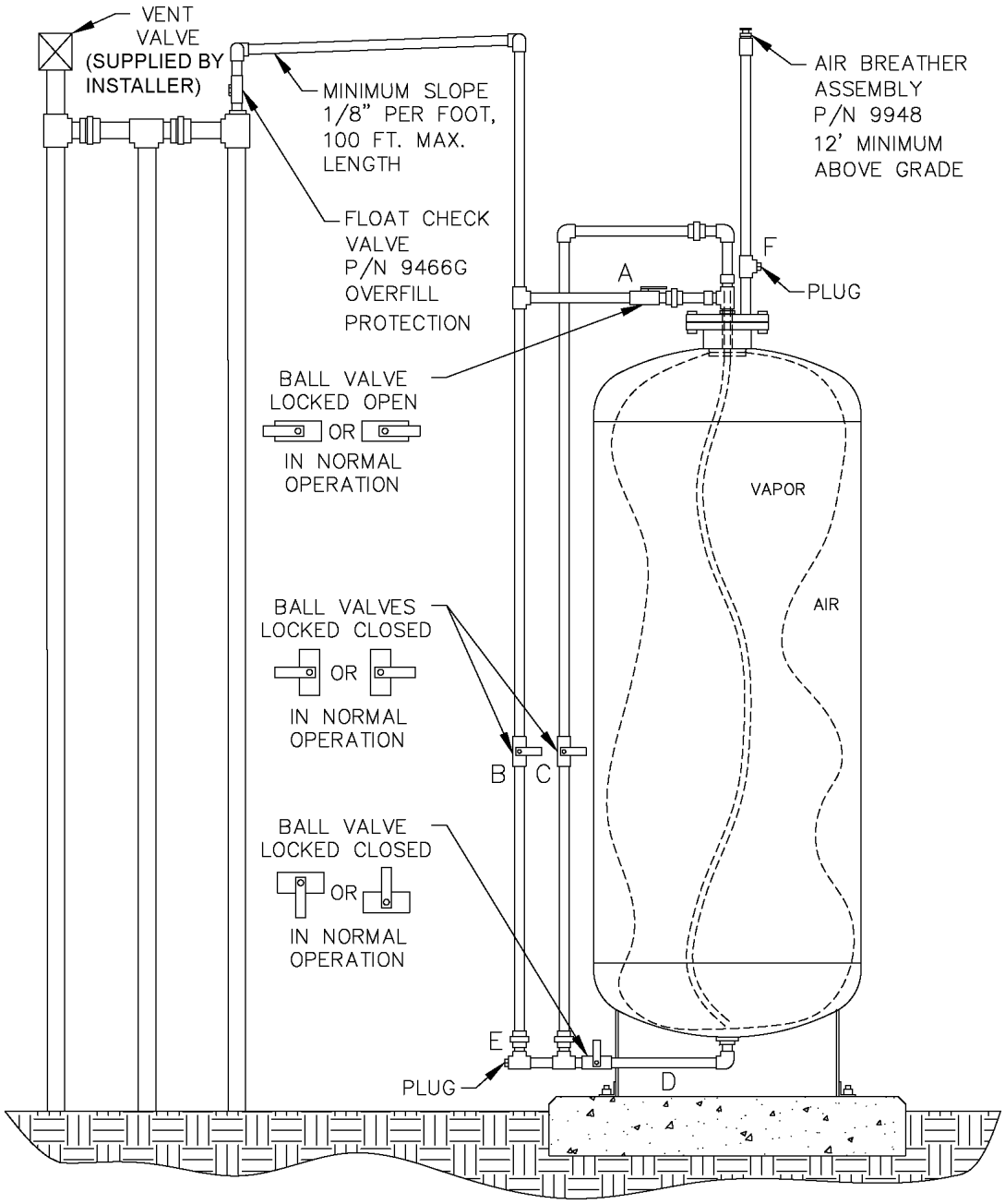

Executive Order VR-202-H
Healy Phase II EVR System
Including In-Station Diagnostics (ISD) Systems

Exhibit 2
Figure 2B-2H
Clean Air Separator Normal Operation Configuration

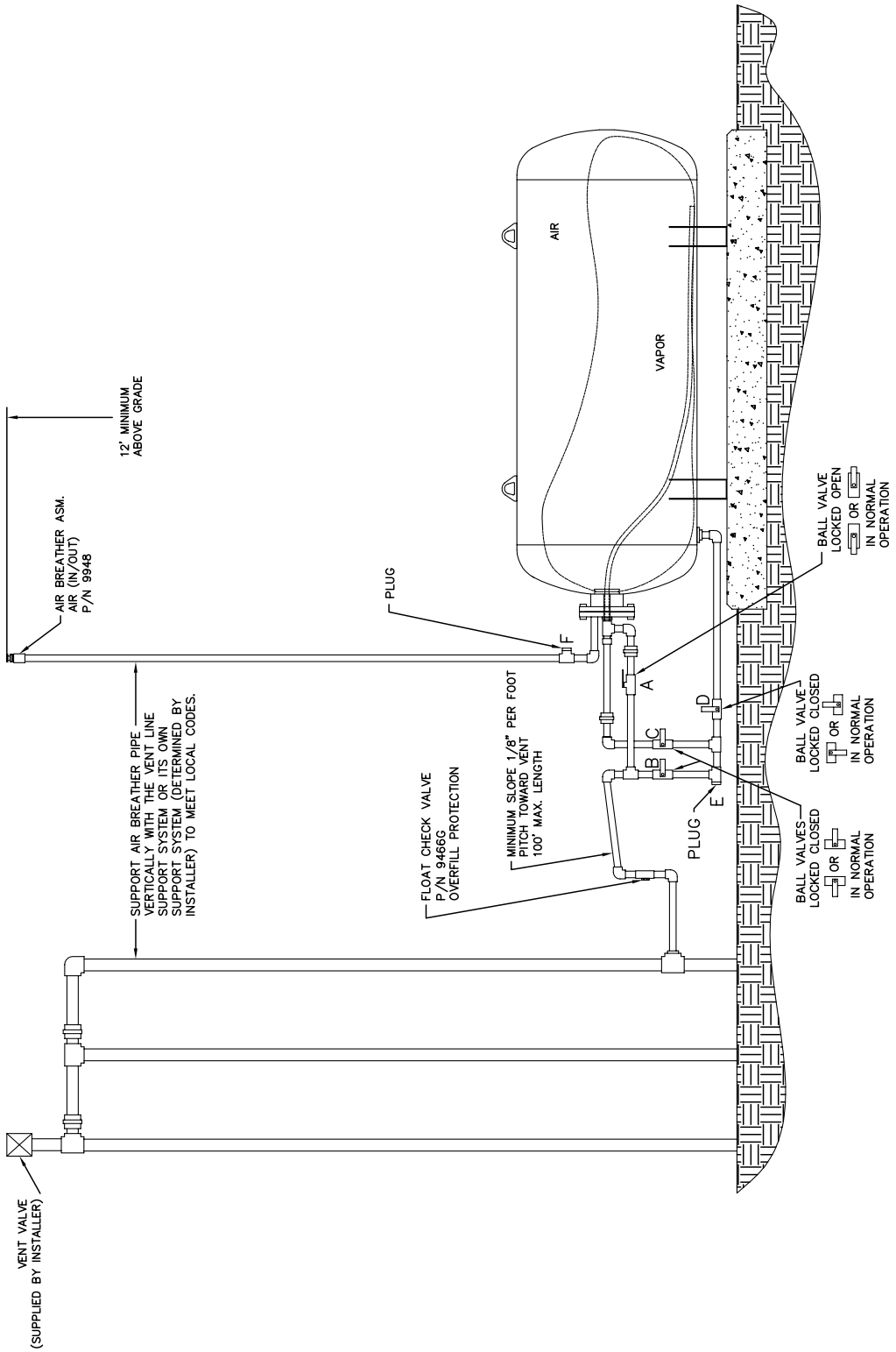

Executive Order VR-202-H
Healy Phase II EVR System
Including In-Station Diagnostics (ISD) Systems

Exhibit 2
Figure 2B-3
Typical Installation of a Single P/V Vent Valve Manifold with Healy Clean Air Separator

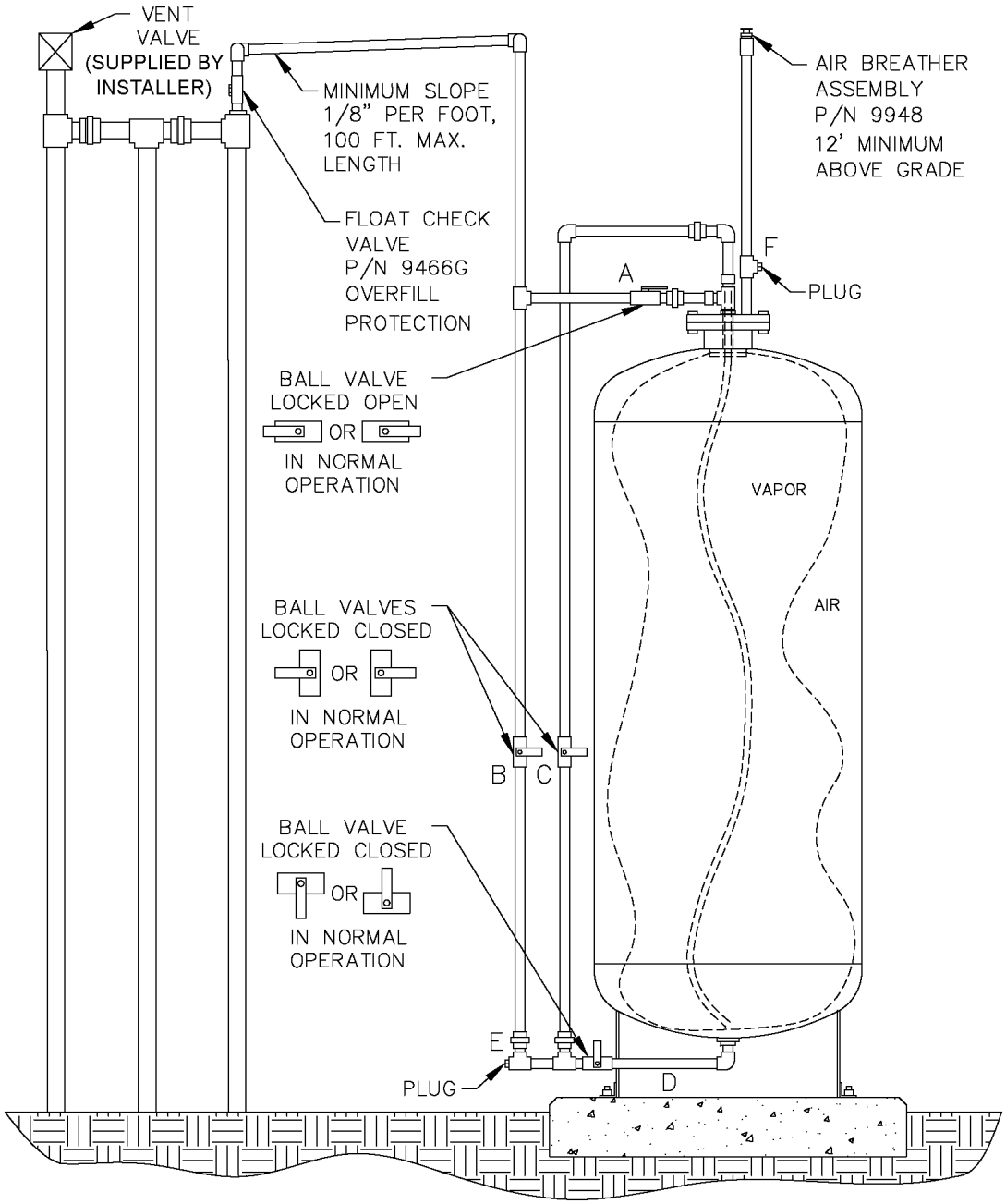

Executive Order VR-202-H
Healy Phase II EVR System
Including In-Station Diagnostics (ISD) Systems

Exhibit 2
Figure 2B-3H
Typical Installation of a Single P/V Vent Valve Manifold with Healy Clean Air Separator

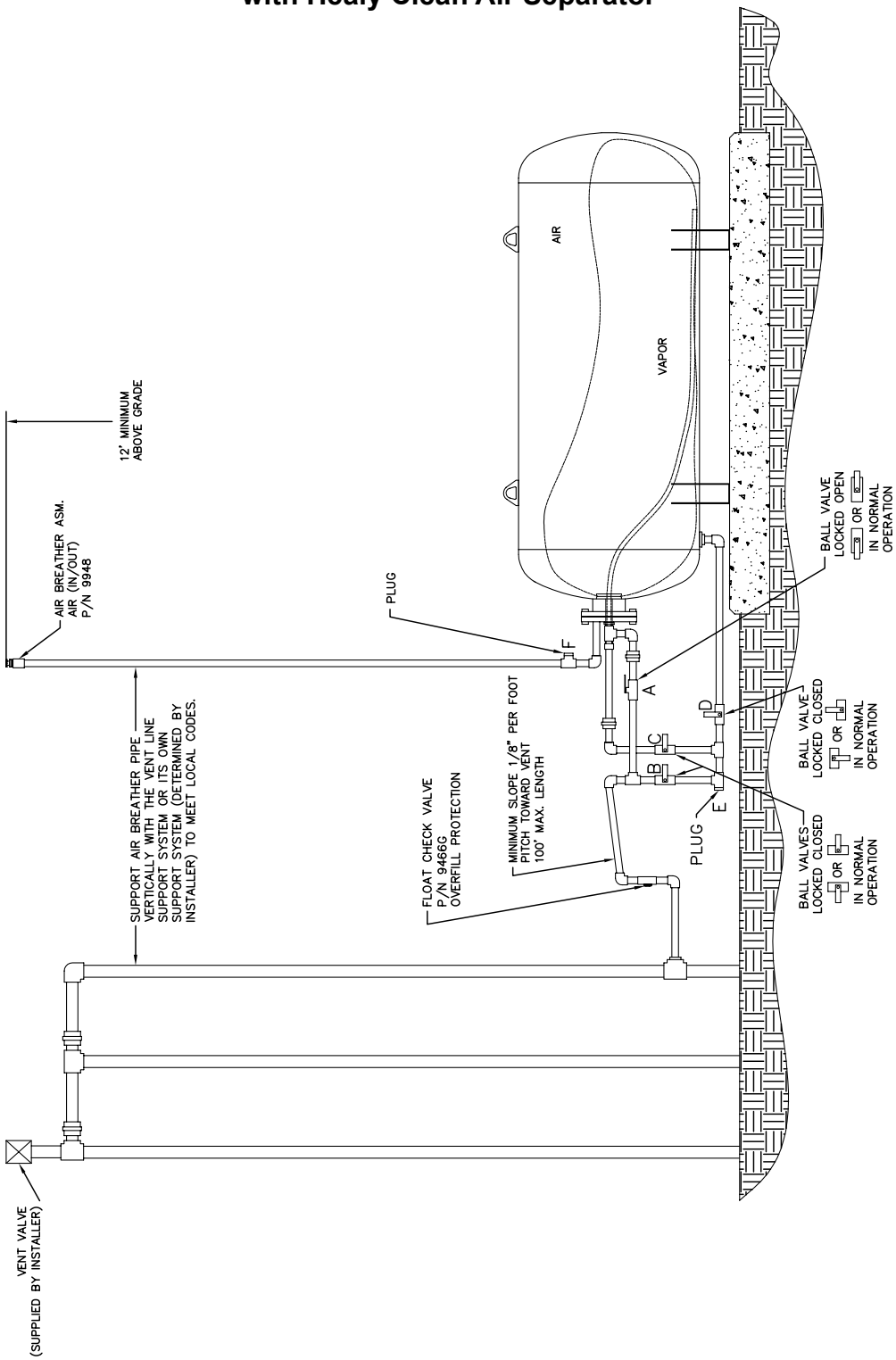

Executive Order VR-202-H
Healy Phase II EVR System
Including In-Station Diagnostics (ISD) Systems

Exhibit 2
Figure 2B-4
Typical Installation of a Two P/V Vent Valve Parallel Manifold with Healy Clean Air Separator

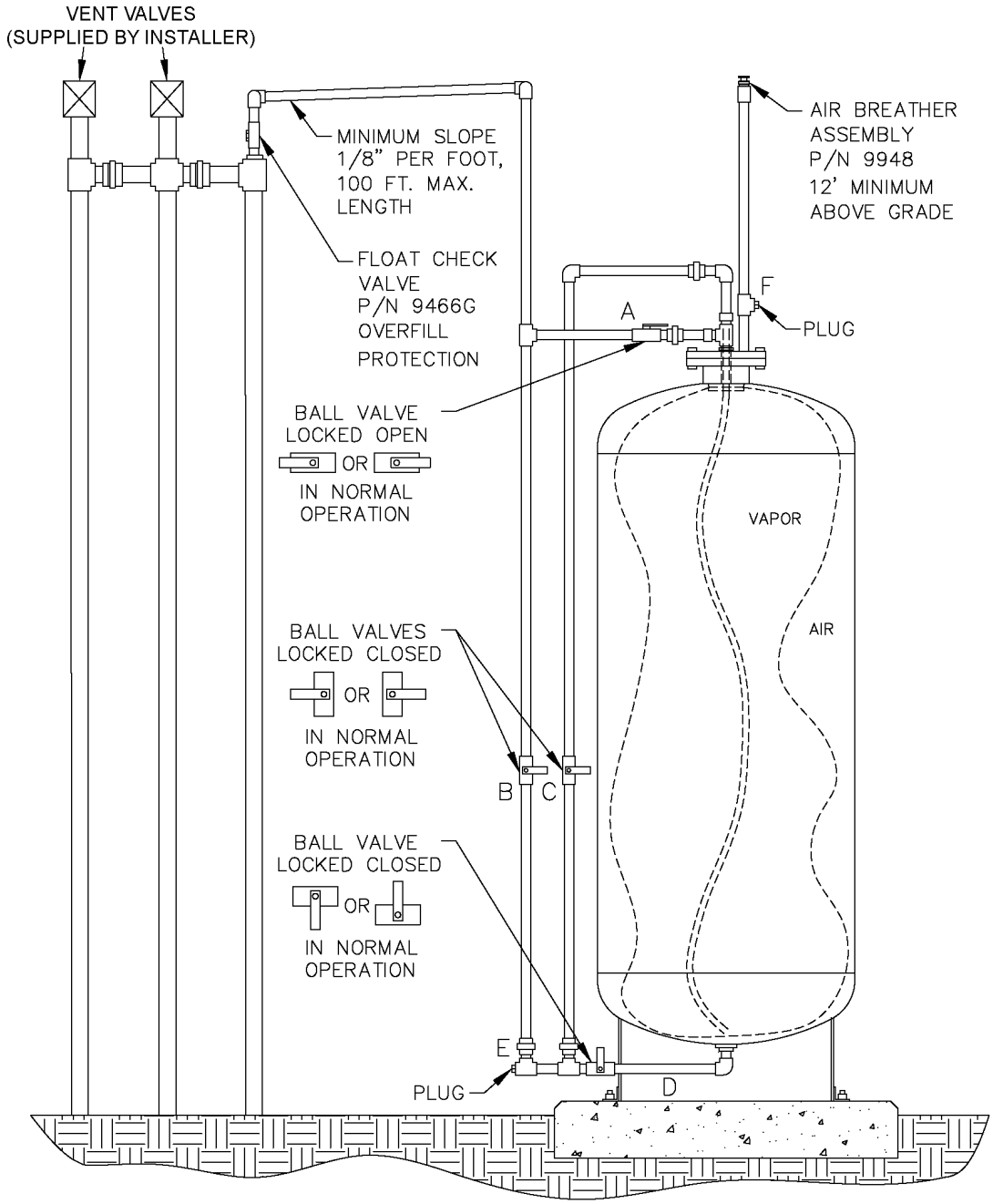

Executive Order VR-202-H
Healy Phase II EVR System
Including In-Station Diagnostics (ISD) Systems

Exhibit 2
Figure 2B-4H
Typical Installation of a Two P/V Vent Valve Parallel Manifold with Healy Clean Air Separator

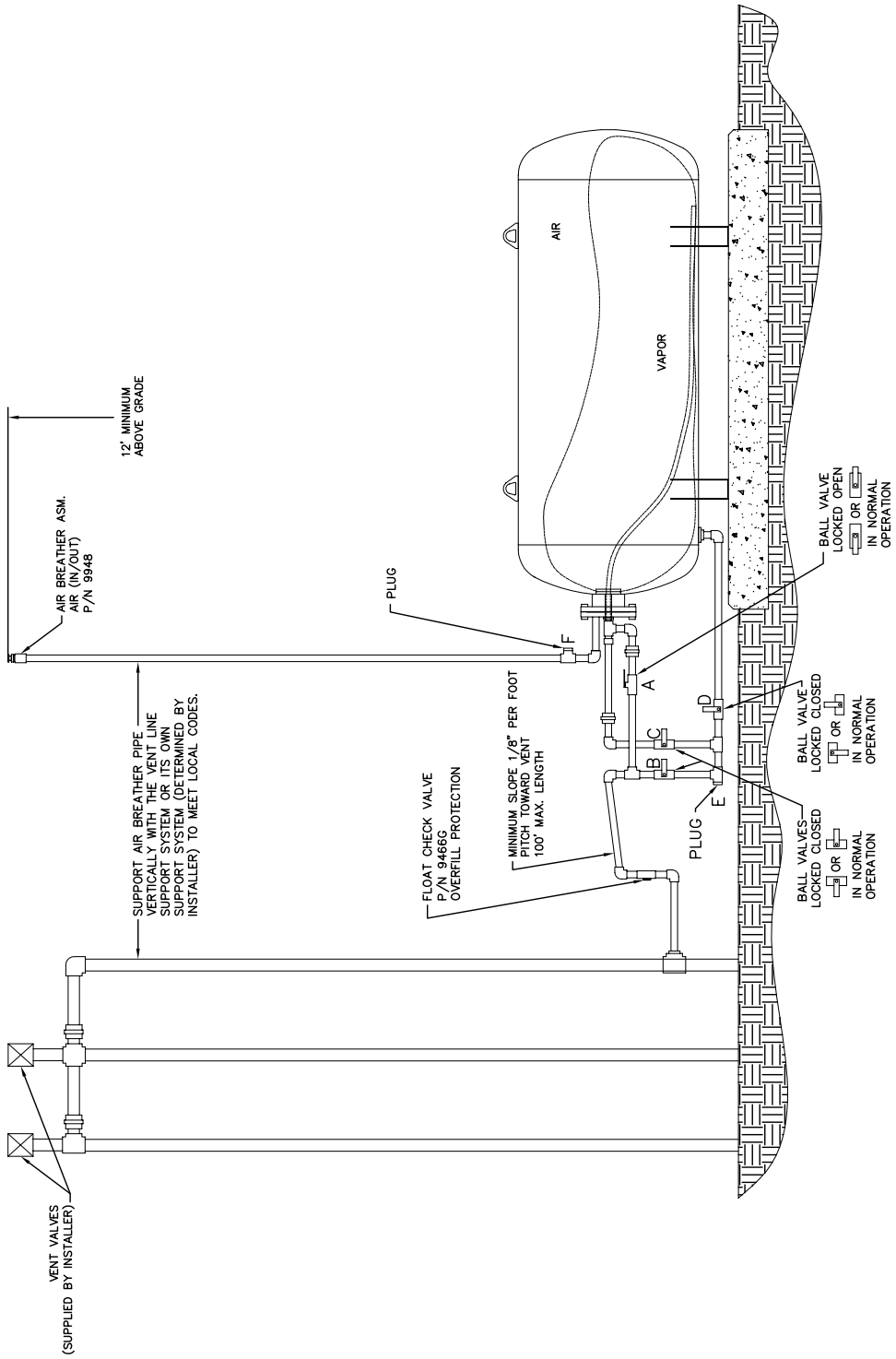

Executive Order VR-202-H
Healy Phase II EVR System
Including In-Station Diagnostics (ISD) Systems

Exhibit 2
Figure 2B-5
Typical Installation of a Three P/V Vent Valve Parallel Manifold with Healy Clean Air Separator

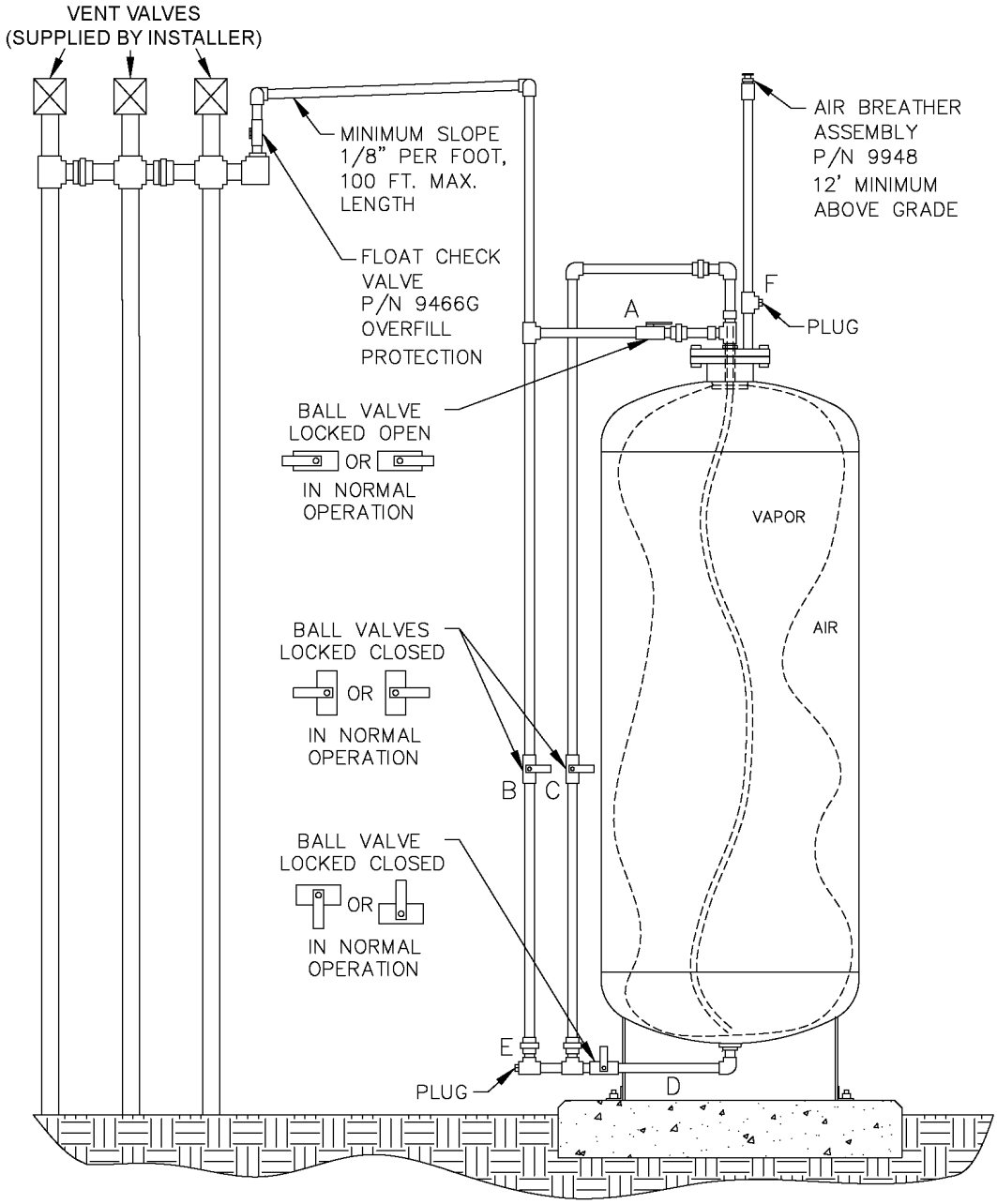

Executive Order VR-202-H
Healy Phase II EVR System
Including In-Station Diagnostics (ISD) Systems

Exhibit 2
Figure 2B-5H
Typical Installation of a Three P/V Vent Valve Parallel Manifold with Healy Clean Air Separator

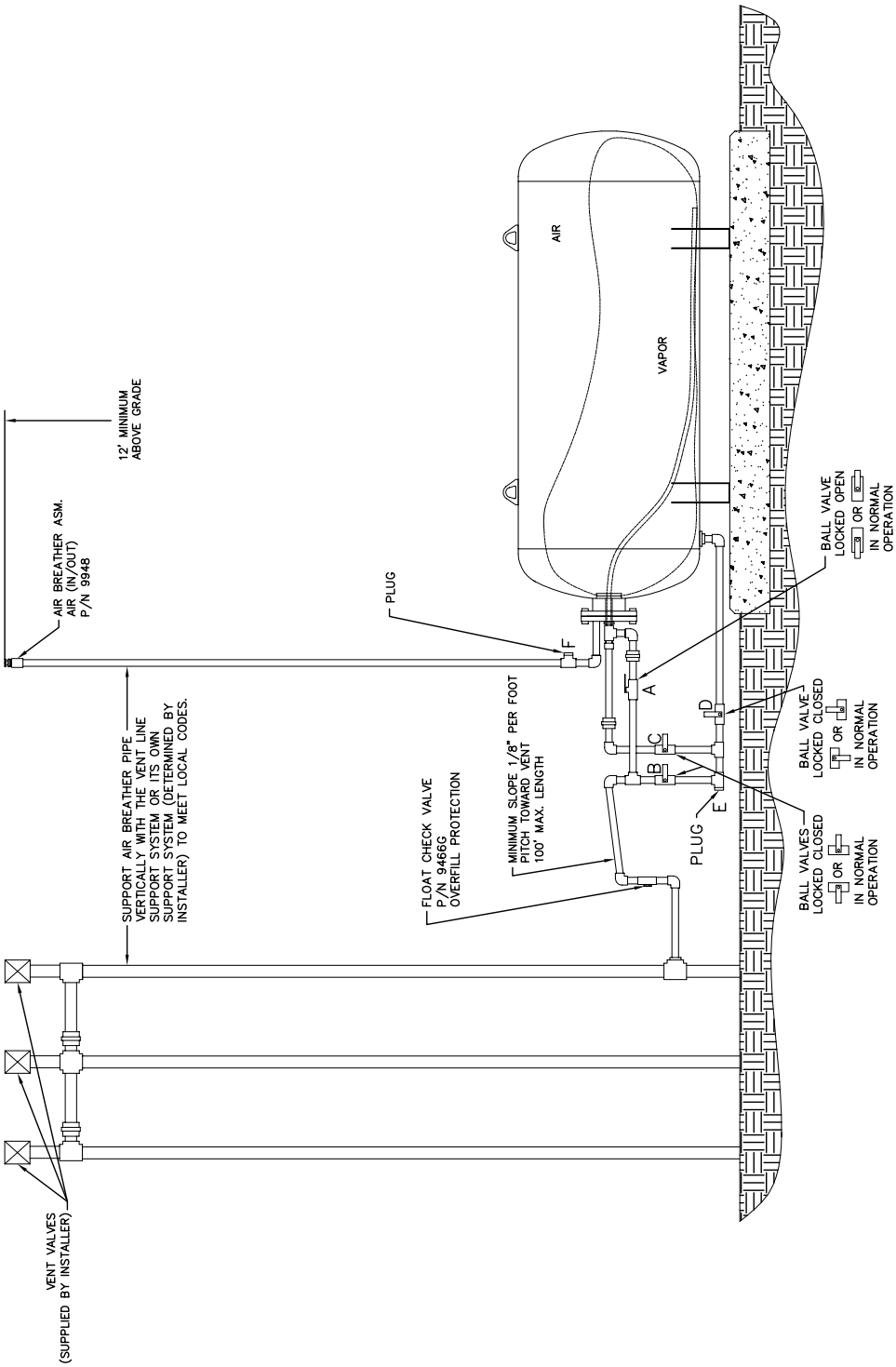

Executive Order VR-202-H
Healy Phase II EVR System
Including In-Station Diagnostics (ISD) Systems

Exhibit 2
Figure 2B-6
Typical Configuration of a P/V Vent Valve Mounted on a Single 3" Vent Line with the Clean Air Separator

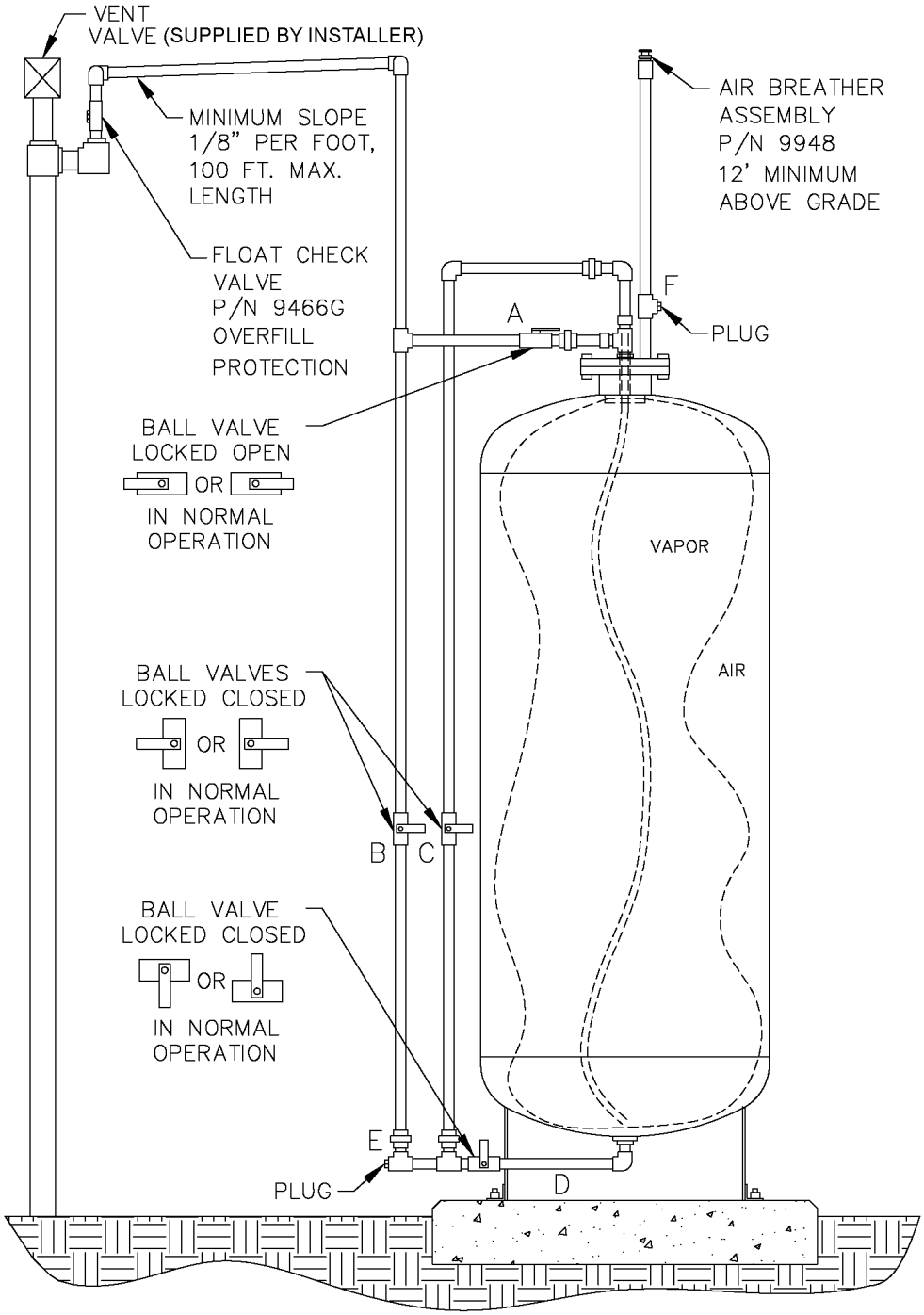

Executive Order VR-202-H
Healy Phase II EVR System
Including In-Station Diagnostics (ISD) Systems

Exhibit 2
Figure 2B-6H
Typical Configuration of a P/V Vent Valve Mounted on a Single 3” Vent Line with the Clean Air Separator

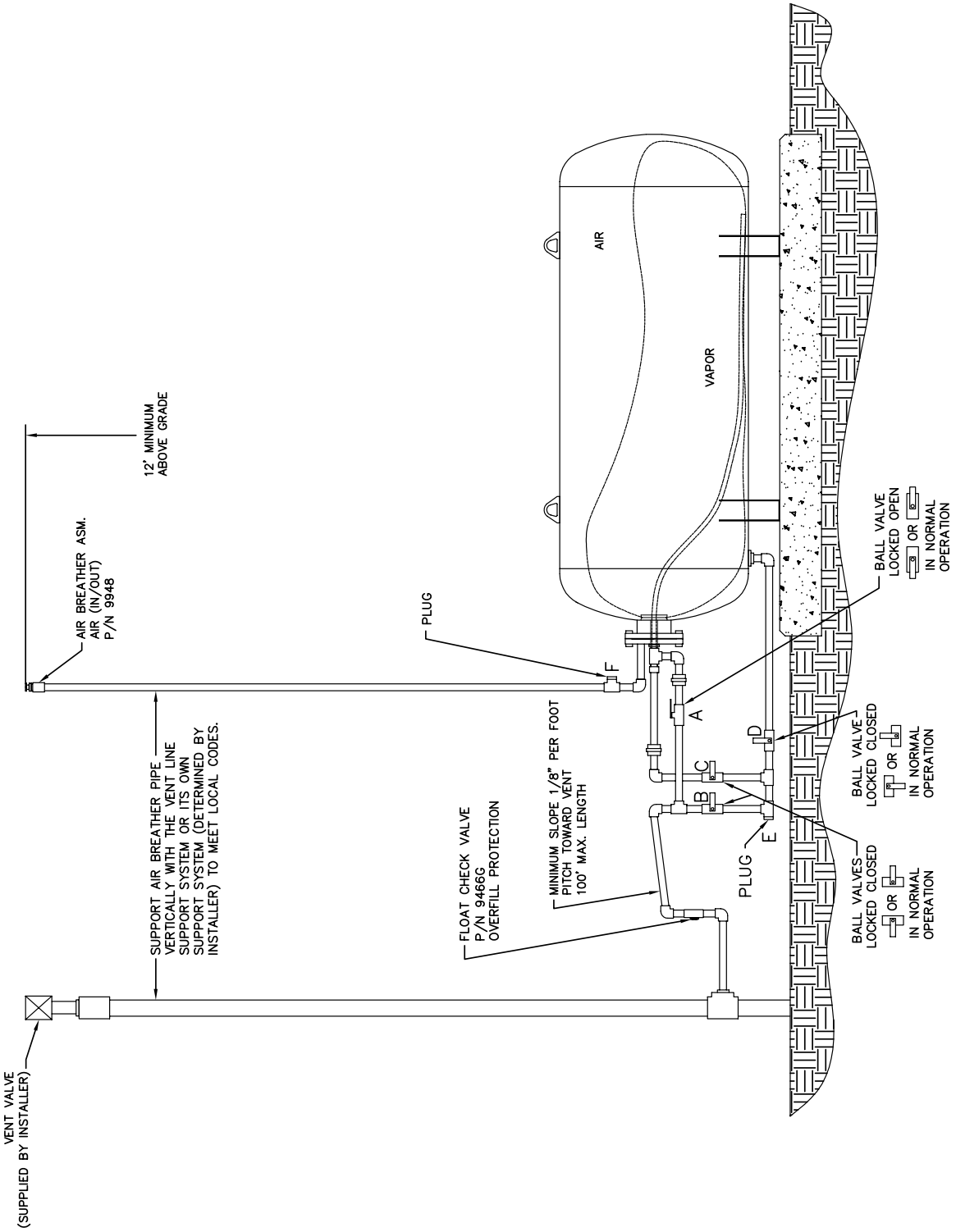

Part II - In-Station Diagnostics Systems
Option I - Veeder-Root ISD System Specifications

TLS Console & ISD Software Version Number

The ISD audible alarms shall be installed at a location that is most likely to be heard by the station attendant during normal station operation (e.g., cash register). The TLS console shall be installed in a location that allows the RS232 port to be easily accessible, and if applicable, per district requirements, for use at anytime. A vacant RS232 serial port shall always be available to electronically download reports.

The presence of ISD and the ISD software version number can be verified on the TLS Console LCD screen by using the <STEP> key or by using the TLS Console <PRINT> key to print and review the latest ISD Daily Report. **See Figure 2B-7** and **2B-8** for TLS and ISD verification instructions.

The TLS Console must have a printer as well as an RS232 interface port.

If the TLS is equipped with security features which prohibit access to the TLS, instructions to override these security features shall be maintained on site in accordance with air district requirements and shall be available to the air district upon request.

Operability Test Procedure

The Veeder-Root ISD operability test procedure provided in Exhibit 9, and in section 4 of the ***ARB Approved Installation, Operation and Maintenance Manual***, shall be used at GDF sites to determine the operability of the Veeder-Root ISD system to comply with applicable performance standards and performance specification in CP-201. Testing the ISD equipment in accordance with this procedure will verify the proper selection, setup and operation of the TLS Console sensors and interface modules.

The Vapor Flow Meter

The Veeder-Root ISD system requires one Vapor Flow Meter per dispenser installed via the ***ARB Approved ISD Vapor Flow Meter Manual 577013-796, Rev. E for the Veeder-Root ISD System***. The Vapor Flow Meter shall be installed into dispensers listed in Exhibit 1 of this Executive Order in accordance with the ***ARB Approved Installation, Operation and Maintenance Manual***. The Vapor Flow Meter is an intrinsically safe sensor that is wired to the TLS Console Smart Sensor Module via a conduit dedicated to TLS Console low-voltage sensors. **Figure 2B-9** shows the ISD Vapor Flow Meter. **Figures 2B-13** and **2B-14** show the installation configuration.

The Vapor Pressure Sensor

The Veeder-Root ISD system requires one Vapor Pressure Sensor per GDF installed into one of the dispensers located closest to the gasoline tanks (If a row of dispensers are equal distance from the gasoline tank pad and within 10' of each other, any dispenser can be used) in accordance with the ***ARB Approved Installation, Operation and Maintenance Manual***. The Vapor Pressure sensor shall be installed into dispensers listed in Exhibit 1 of this Executive Order. The Vapor Pressure Sensor is an intrinsically safe sensor that is wired to the TLS Console Smart Sensor Module via a conduit dedicated to TLS Console low-voltage sensors. **Figure 2B-10** shows an ISD Vapor Pressure Sensor illustration. **Figures 2B-13** and **2B-14** show the installation configuration.

Dispenser Interface Module (DIM)

Existing Dispenser Interface Modules or DIM communication cards are used to interface to the dispenser Point Of Sale (POS) or controller system to gather fuel transaction data. The ISD Operability Test Procedure provided in Exhibit 9 and in Section 4 of the Veeder-Root ISD Install, Setup and Operation Manual can be used to verify the proper selection and setup of the Dispenser Interface Module. See **Figure 2B-11** for a typical Dispenser Interface Module Illustration.

Tank Inventory Probe Sensor

Existing Tank Inventory Probe sensors (one per gasoline storage tank) are used to measure the amount of vapor space in the Underground Storage Tanks (USTs). The ISD Operability Test Procedure can be used to verify the proper selection and setup of the Tank Inventory Probes. See **Figure 2B-12** for a typical Tank Inventory Probe Sensor.

Shutdown Control

The TLS Console must be wired per the ***Veeder-Root ISD Install, Setup and Operation Manual 557013-800, Rev. E*** of the ***ARB Approved Installation, Operation and Maintenance Manual*** such that it shall automatically prohibit the dispensing of fuel through shutdown of all the gasoline turbine pumps during a CP-201 ISD failure alarm or TLS Console ISD system power loss.

TLS Console Modules

The ISD Operability Test Procedure in Exhibit 9 and in section 4 of the Veeder-Root ISD Install, Setup, and Operation Manual of the ***ARB Approved Installation, Operation, and Maintenance Manual*** shall be used to verify the proper selection and setup of the TLS Console Modules.

Training Program

All Veeder-Root contractors must successfully complete the applicable Veeder-Root training program before they can install, startup, and service TLS Console equipment. Contractors must have up-to-date Level 1 certification to install the TLS Console ISD system. Contractors must have an up-to-date Level 2, 3 or 4 certification and the ISD certification to startup and service the ISD system. The schedule, fee and registration information for the Authorized Service Contractor (ASC) training program can be found at http://www.veeder.com.

To confirm TLS or ISD training a regulator should send an email to technicaltraining@gilbarco.com with the name (and company) of the ASC to obtain verification of the ASC TLS/ISD training status or call 800-997-7725 and press "*" to get to the Veeder-Root menu and "*" again to speak to a representative.

Maintenance

The TLS console, including interface modules, do not require scheduled maintenance. ISD System Self-Test Monitoring algorithms are designed to verify proper selection, setup and operation of the TLS console and sensors.

There is no recommended maintenance, inspection nor calibration for the Vapor Flow Meter or the Vapor Pressure Sensor. Servicing should be performed in response to warning or alarm conditions.

Executive Order VR-202-H
Healy Phase II EVR System
Including In-Station Diagnostics (ISD) Systems

Exhibit 2
Figure 2B-7
Finding The Veeder-Root ISD Version Number

Use the TLS Console <FUNCTION> key to find the ISD Daily Report menu:

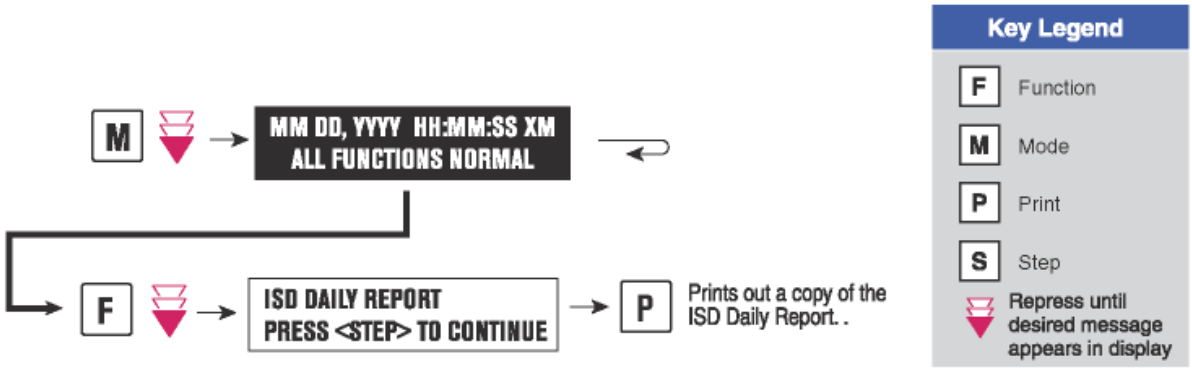

The ISD version number can be verified on the TLS Console LCD screen using the <STEP> key or by using the TLS Console <PRINT> key to print and review the latest ISD Daily Report:

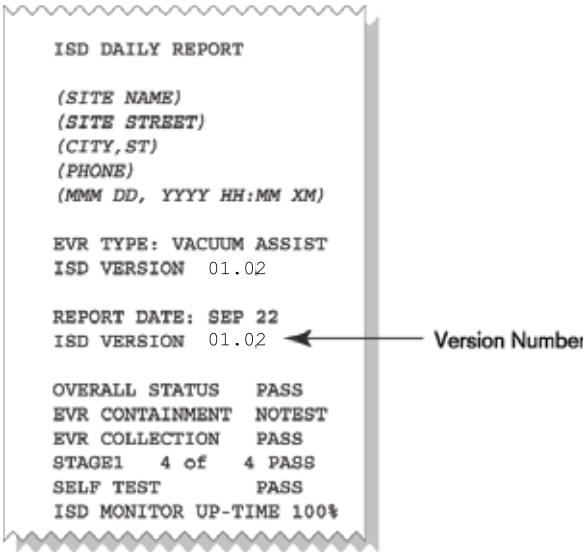

Presence of the ISD Daily Report menu and correct ISD software version number is evidence that ISD is installed and activated in the TLS Console.

Executive Order VR-202-H
Healy Phase II EVR System
Including In-Station Diagnostics (ISD) Systems

Exhibit 2
Figure 2B-8
Standard TLS Console

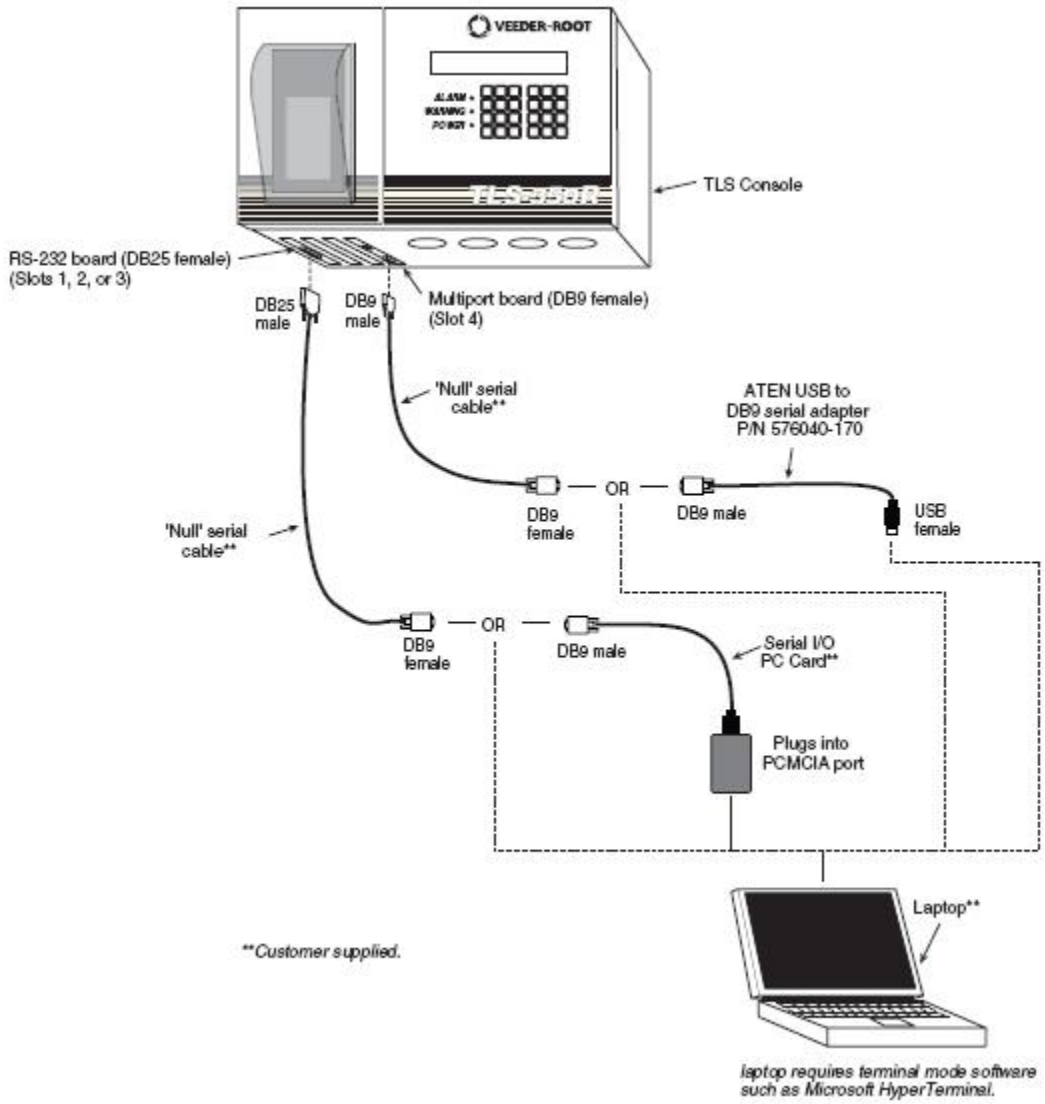

Executive Order VR-202-H
Healy Phase II EVR System
Including In-Station Diagnostics (ISD) Systems

Exhibit 2

Figure 2B-9
Veeder-Root 331847-XXX
Vapor Flow Meter

Figure 2B-10
Veeder-Root 331946-001
Vapor Pressure Sensor

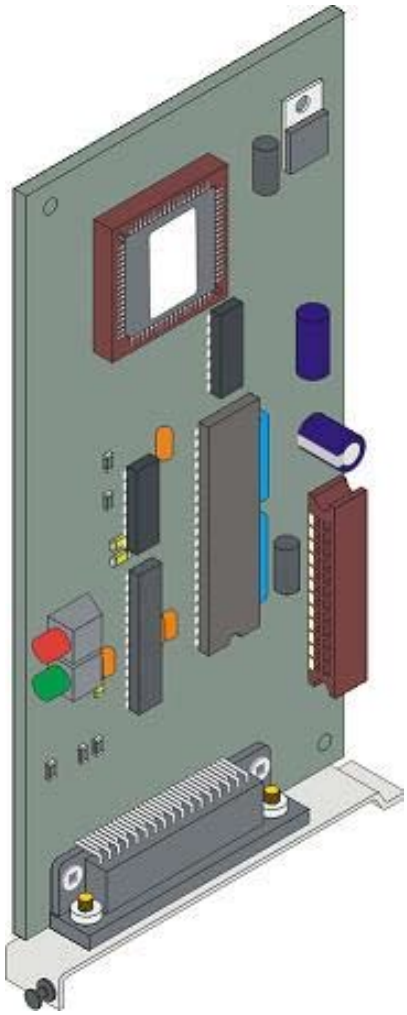

Figure 2B-11
Veeder-Root
Dispenser Interface Module
(DIM)

Executive Order VR-202-H
Healy Phase II EVR System
Including In-Station Diagnostics (ISD) Systems

Exhibit 2
Figure 2B-12
Tank Inventory Probe Sensor

Executive Order VR-202-H
Healy Phase II EVR System
Including In-Station Diagnostics (ISD) Systems

Exhibit 2
Figure 2B-13

Typical Installation of the Veeder-Root Vapor Pressure Sensor & Vapor Flow Sensor

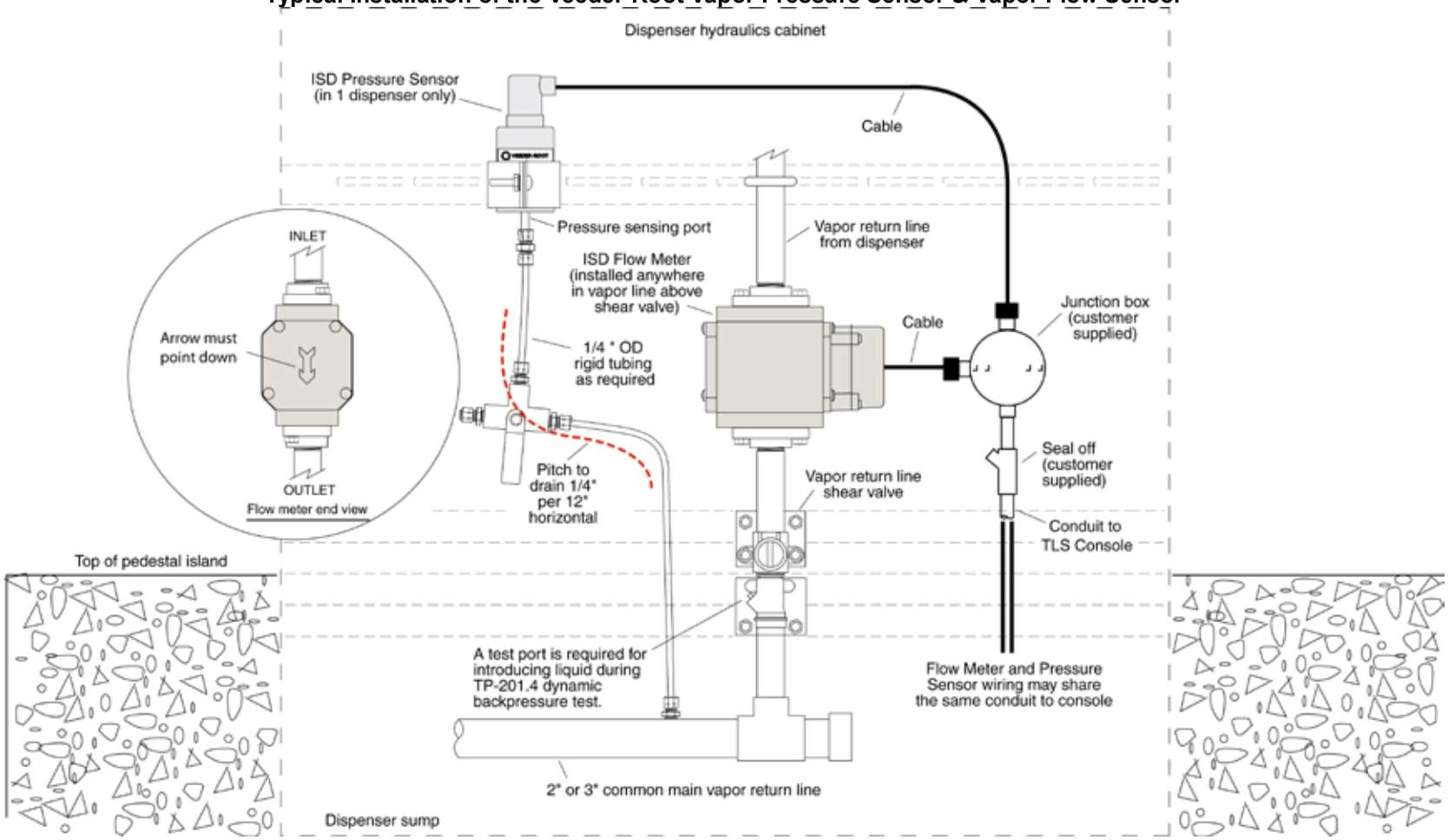

Executive Order VR-202-H
Healy Phase II EVR System
Including In-Station Diagnostics (ISD) Systems

Exhibit 2
Figure 2B-14
Typical Installation of the Veeder-Root Vapor Pressure Sensor and Vapor Flow Sensor

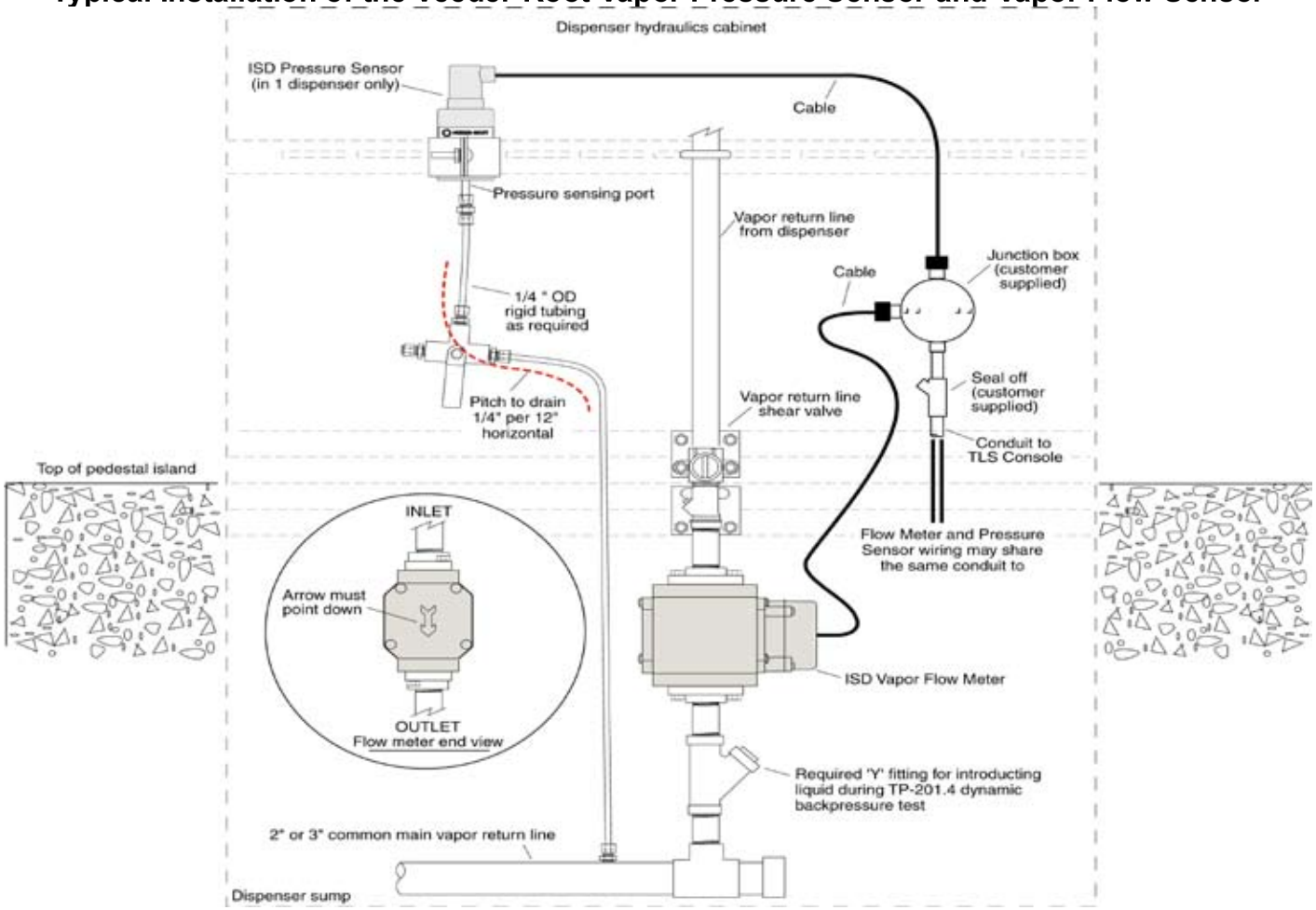

Option II - INCON Vapor Recovery Monitoring (VRM) System Specifications

Console & VRM Software Version Number

The ISD audible alarms shall be installed at a location that is most likely to be heard by the station attendant during normal station operation (e.g., cash register). The console shall be installed in a location that allows the Ethernet or RS232 port (COMM 1) to be easily accessible, and if applicable, per district requirements, for use at anytime. A vacant RS232 serial port (COMM 1) shall always be available to electronically download reports.

The presence of VRM and the VRM software version number can be verified on the Console touchscreen screen by pressing the VRM Icon key or by printing a VRM Daily or Monthly Report. See **Figure 2B-15** for the verification instructions.

The Console must have a printer.

The Console is equipped with password security features which prohibit the ability to make changes to the system. Instructions and passwords shall be maintained on site in accordance with air district requirements and shall be available to the air district upon request.

Operability Test Procedure

The INCON VRM operability test procedure provided in Exhibit 10, and in the VRM Operability Testing section of the **ARB Approved Installation, Operation and Maintenance Manual**, shall be used at GDF sites to determine the operability of the INCON VRM system to comply with applicable performance standards and performance specification in CP- 201. Testing the VRM equipment in accordance with this procedure will verify the proper selection, setup and operation of the Console sensors and interface modules.

Vapor Flow Meter

The INCON VRM system requires one Vapor Flow Meter per dispenser installed via the ARB Approved Vapor Flow Meter Manual 000-2144, Rev. A. The Vapor Flow Meter shall be installed into dispensers listed in Exhibit 1 of this Executive Order in accordance with the **ARB Approved Installation, Operation and Maintenance Manual**. The Vapor Flow Meter is an intrinsically safe sensor that is wired to the Console Probe Module via a conduit dedicated to low-voltage sensors. **Figure 2B-17** shows the Vapor Flow Meter. **Figure 2B-19** shows the installation configuration.

Vapor Pressure Sensor

The INCON VRM system requires one Vapor Pressure Sensor per GDF installed into one of the dispensers located with the shortest run to the underground storage tanks (If a row of dispensers are equal distance from the tank pad, any dispenser can be used) in accordance with the **ARB Approved Installation, Operation and Maintenance Manual**. The Vapor Pressure Sensor shall be installed into dispensers listed in Exhibit 1 of this Executive Order. The Vapor Pressure Sensor is an intrinsically safe sensor that is wired to the Console's 4-20mA Module via a conduit dedicated to low-voltage sensors. **Figure 2B-18** shows a Vapor Pressure Sensor illustration. **Figure 2B-20** shows the installation configuration.

Dispenser Interface Module (DIM)

Existing Dispenser Interface Modules or DIM communication cards are used to interface to the dispenser Point Of Sale (POS) or controller system to gather fuel transaction data. The ISD Operability Test Procedure provided in Exhibit 10 and in the **ARB Approved Install, Operators, and Maintenance Manual** can be used to verify the proper selection and setup of the Dispenser Interface Module.

Tank Inventory Probe Sensor

Existing Tank Inventory Probe sensors (one per gasoline storage tank) are used to measure the amount of vapor space in the Underground Storage Tanks (USTs). The ISD Operability Test Procedure can be used to verify the proper selection and setup of the Tank Inventory Probes. See **Figure 2B-12** for a typical Tank Inventory Probe Sensor.

Data Transfer Unit

The optional Data Transfer Unit can be installed as a replacement for underground wire and conduit for both the Vapor Flow Meter and Vapor Pressure Sensor. The TS-DTU must be wired per the INCON Data Transfer Unit Dispenser Retrofit Manual 000-2146, Rev. A of the **ARB Approved Installation, Operation and Maintenance Manual.** A minimum of two units are required when installing DTUs, one in the GDF and one in a dispenser. A single site can mix and match between dedicated cables and DTU installation methods. See Figure 2B-21.

Shutdown Control

The Console must be wired per the INCON VRM Install, Operators, and Maintenance Manual 000-2058, Rev. C of the **ARB Approved Installation, Operation and Maintenance Manual** such that it shall automatically prohibit the dispensing of fuel through shutdown of individual dispensers during a CP-201 ISD failure alarm.

Console Modules

The VRM Operability Test Procedure in Exhibit 10 and in the INCON VRM Install, Operators, and Maintenance Manual 000-2058, Rev C of the **ARB Approved Installation, Operation, and Maintenance Manual** shall be used to verify the proper selection and setup of the Console Modules.

Training Program

All INCON contractors must successfully complete the applicable Franklin Fueling Systems training program before they can install, startup, and service INCON Console equipment. Contractors must have up-to-date Level 1 & 2 certifications to install and startup the TS Console. Contractors must have an up-to-date Level 5 certification to install, startup and service the VRM system. The schedule, fee and registration information for the Authorized Service Contractor (ASC) training program can be found at http://www.franklinfueling.com.

A list of certified contractors with current console and VRM training will be available at the Franklin Fueling web page, www.franklinfueling.com.

Maintenance

The console, including interface modules, do not require scheduled maintenance. The VRM System uses a Self-Test Monitoring feature that is designed to verify proper selection, setup and operation of the console and sensors. There is no recommended maintenance, inspection nor calibration for the Vapor Flow Meter or the Vapor Pressure Sensor. Servicing should be performed in response to warning or alarm conditions.

Executive Order VR-202-H
Healy Phase II EVR System
Including In-Station Diagnostic (ISD) Systems

Exhibit 2
Figure 2B-15
Finding The INCON VRM Version Number

Version number on the LCD:

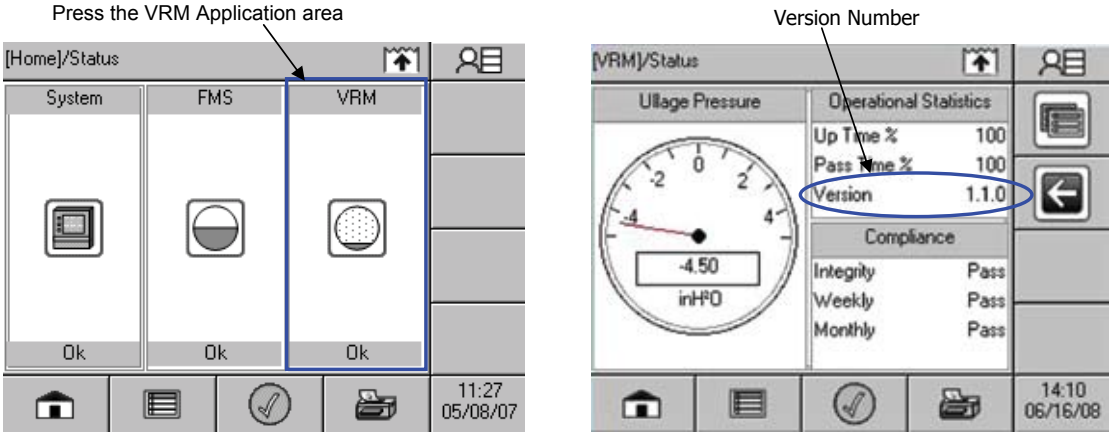

Version number on the VRM Daily Report or Monthly Report:

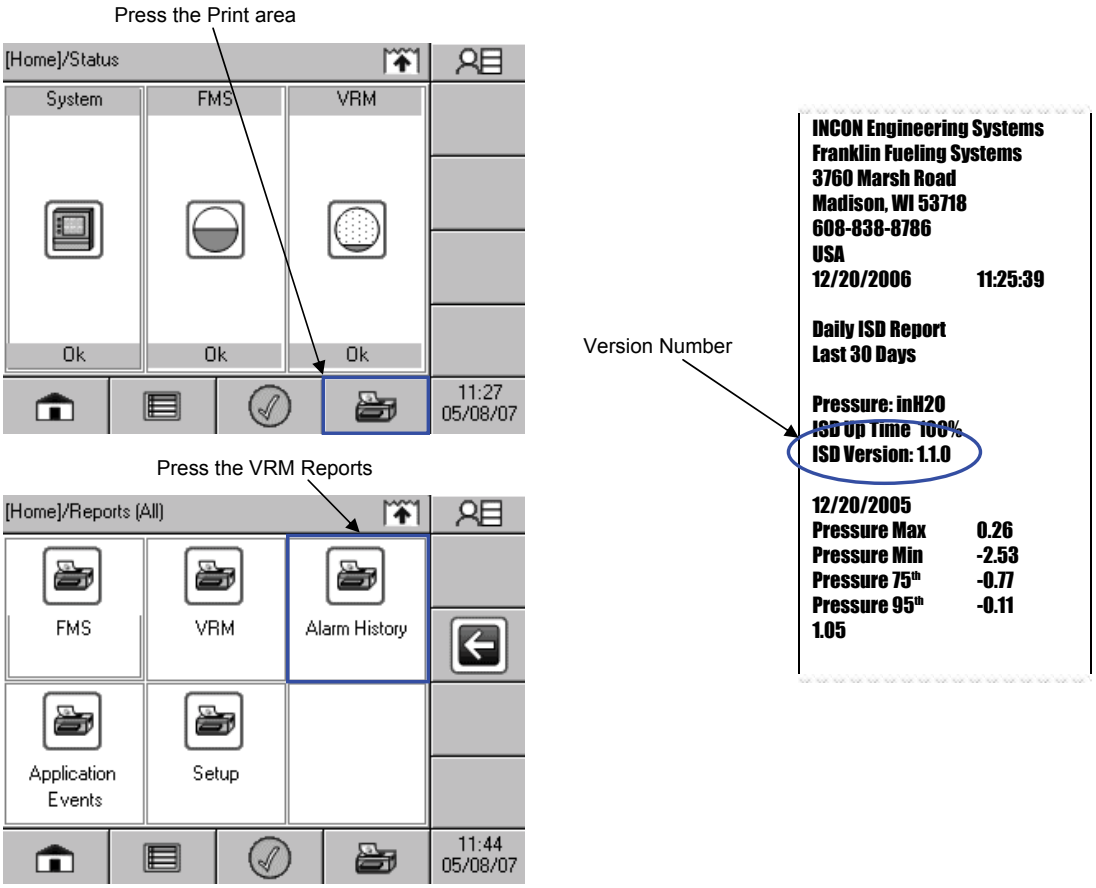

Executive Order VR-202-H
Healy Phase II EVR System
Including In-Station Diagnostic (ISD) Systems

Exhibit 2
Figure 2B-16
Standard Tank Sentinel Console

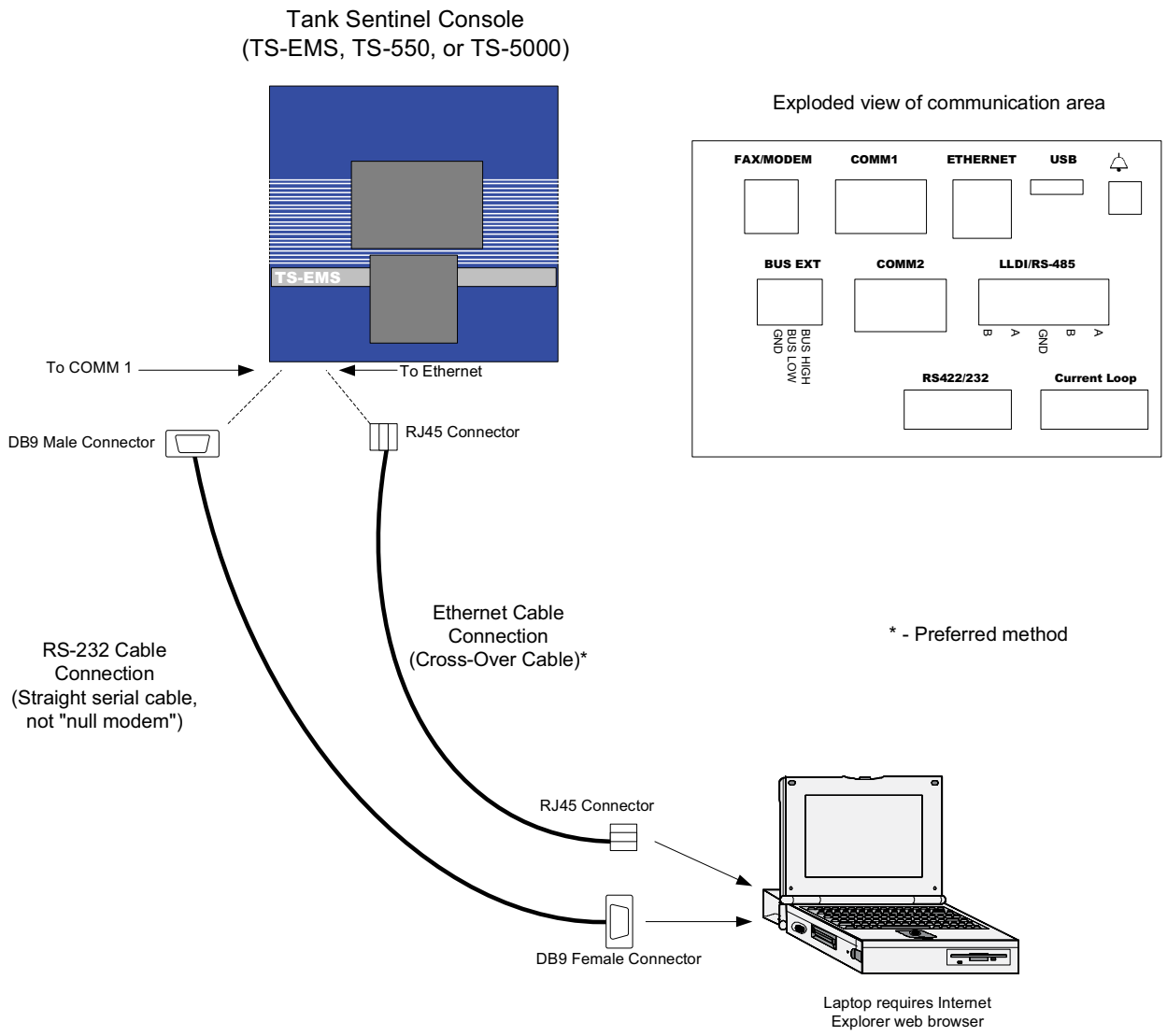

Executive Order VR-202-H
Healy Phase II EVR System
Including In-Station Diagnostic (ISD) Systems

Exhibit 2

Figure 2B-17
INCON TS-VFM
Vapor Flow Meter

Figure 2B-18
INCON TS-VPS
Vapor Pressure Sensor

Executive Order VR-202-H
Healy Phase II EVR System
Including In-Station Diagnostic (ISD) Systems

Exhibit 2
Figure 2B-19
Typical Installation of the INCON Vapor Flow Meter

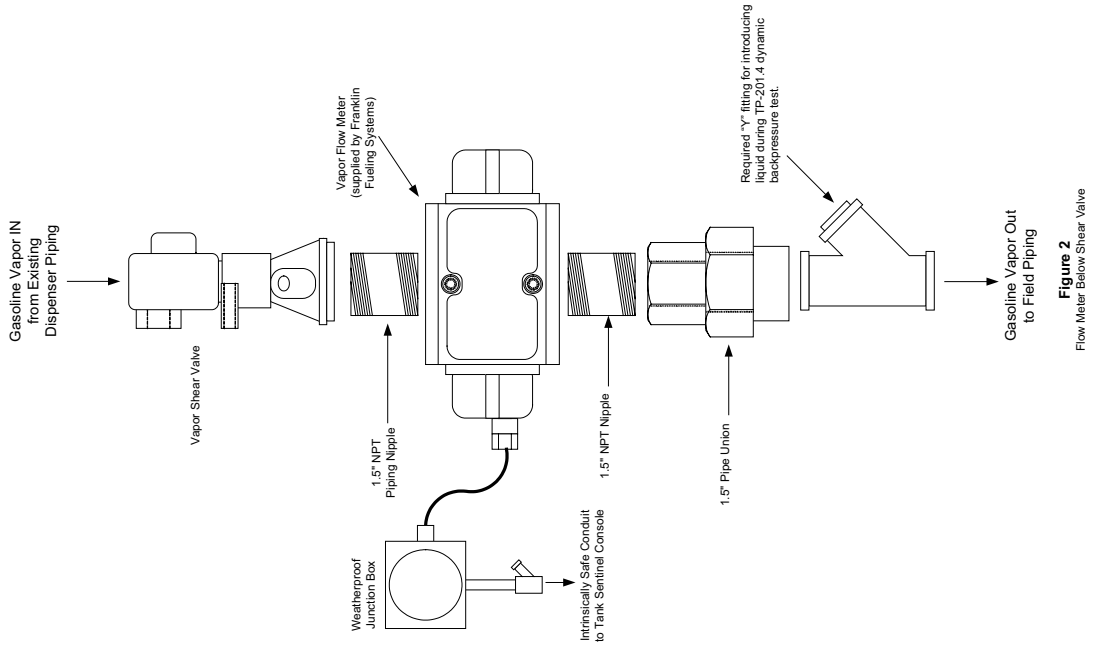

Figure 2
Flow Meter Below Shear Valve

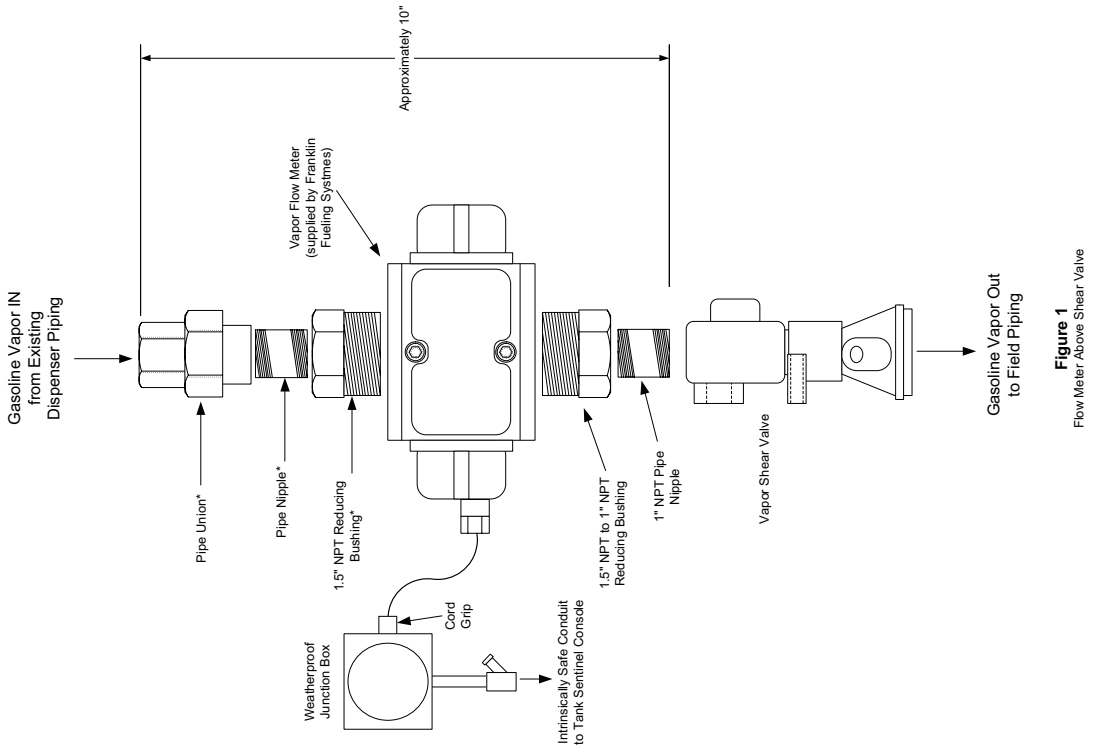

Figure 1
Flow Meter Above Shear Valve

Executive Order VR-202-H
Healy Phase II EVR System
Including In-Station Diagnostic (ISD) Systems

Exhibit 2
Figure 2B-20
Typical Installation of the INCON Vapor Pressure Sensor

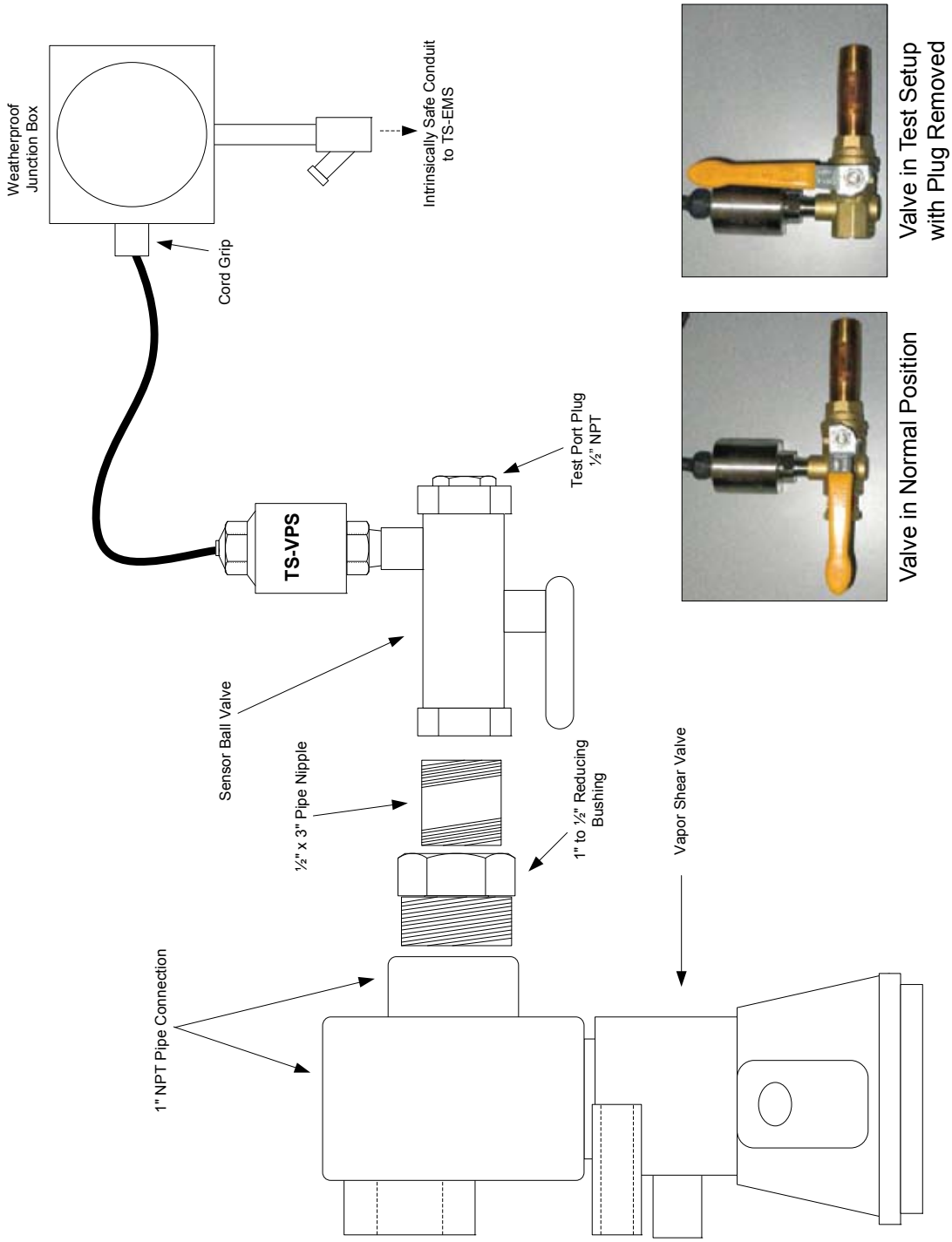

Executive Order VR-202-H
Healy Phase II EVR System
Including In-Station Diagnostic (ISD) Systems

Exhibit 2
Figure 2B-21
Data transfer Unit

Executive Order VR-202-H
Healy Phase II EVR System
Including In-Station Diagnostics (ISD) Systems

Exhibit 2
Figure 2B-21
Example of a GDF Maintenance and Alarm History Record

Date of Maintenance/ Test/Inspection/Failure/ Alarm History (including date and time of maintenance call)	Repair Date To Correct Test Failure	Maintenance/Test/Inspection Performed and Outcome	Affiliation	Name and Technician ID number of Individual Conducting Maintenance or Test	Telephone Number

Executive Order VR-202-H
Healy Phase II EVR System
Including In-Station Diagnostic (ISD) Systems

Exhibit 3

Part I - Healy Manufacturing Performance Standards and Specifications

The Healy Phase II EVR System Including In-Station Diagnostic (ISD) Systems and all components shall be manufactured in compliance with the performance standards and specifications in CP-201 (amended May 25, 2006), as well as the requirements specified in this Executive Order. All components (Exhibit 1) shall be manufactured as certified; no change to the equipment, parts, design, materials or manufacturing process shall be made unless approved in writing by the Executive Officer or Executive Officer delegate. Unless specified in Exhibit 2 or in the ***ARB Approved Installation, Operation and Maintenance Manual***, the requirements of this section apply to the manufacturing process and are not appropriate for determining the compliance status of a gasoline dispensing facility.

1. NOZZLES

Every nozzle shall be tested at the factory. Every nozzle shall have affixed to it a card or label stating the performance specifications listed below, and a statement that the nozzle was tested to, and met, the following specifications.

a. The nozzle vapor valve leak rate shall not exceed 0.038 cubic feet per hour (CFH) at a pressure of +2 inches H_2O when tested in accordance with the latest version of TP-201.2B.

b. The nozzle vapor valve leak rate shall not exceed 0.10 CFH at a vacuum of -100 inches H_2O when tested in accordance with the latest version of TP-201.2B.

c. The nozzle automatic shut off feature is tested at all service clip settings (either two or three) as well as handheld in accordance with Underwriters Laboratories (UL) Standard 842.

d. The nozzle is tested in accordance with the California Department of Food and Agriculture Division of Measurement Standards Article 2 (DMS 6-6-97).

e. The nozzle is manufactured to the specifications that passed all tests conducted during the ARB certification for the following:

TP-201.2C - Spillage from Phase II Systems
TP-201.2D - Post Fueling Drips From Nozzles
TP-201.2E - Gasoline Liquid Retention in Nozzles and Hoses

f. The nozzle is manufactured to meet the Vapor to Liquid Ratio as specified in Exhibit 2.

g. The terminal end of each nozzle shall be manufactured in accordance with the specifications referenced in Section 4.7.3 of CP-201.

2. INVERTED COAXIAL HOSES

a. Every inverted coaxial hose is tested for continuity and pressure tests in accordance with UL Standard 330.

3. HOSE ADAPTORS

a. Every hose adaptor is tested for continuity and pressure tests in accordance with UL Standard 567.

4. RECONNECTABLE BREAKAWAY COUPLINGS

a. Every reconnectable breakaway coupling is tested for continuity and pressure tests in accordance with UL Standard 567.

5. FLOW LIMITER

a. Every flow limiter is tested to 50 pounds per square inch (psi) liquid pressure to verify maximum gasoline flow rate limited to 10.0 gpm.

6. VP1000 VACUUM PUMPS

a. Every vacuum pump is pressure tested in accordance with UL Standard 79.

b. Every vacuum pump is manufactured to the exact specifications that passed all tests conducted during the ARB certification.

c. Every MC100 control module is tested in the factory to verify proper operation.

7. TANK PRESSURE MANAGEMENT SYSTEM

a. The Clean Air Separator tank is designed, constructed, tested, inspected and stamped per the American Society of Mechanical Engineers (ASME) Code Section VIII, Division 1, 2001 Edition, 2003 Addendum.

b. Every Clean Air Separator bladder is performance and pressure tested using the **Clean Air Separator Performance Test** to ensure its integrity.

Part II - In-Station Diagnostics (ISD) Systems
Option I - Veeder-Root ISD Manufacturing Performance Standards and Specifications

The Veeder-Root ISD System and all components shall be manufactured in compliance with the performance standards and specifications in CP-201 (amended May 25, 2006), as well as the requirements specified in this Executive Order. All components (Exhibit 1) shall be manufactured as certified; no change to the equipment, parts, design, materials or manufacturing process shall be made unless approved in writing by the Executive Officer or Executive Officer delegate. Unless specified in Exhibit 2 or in the ***ARB Approved Installation, Operation and Maintenance Manual***, the requirements of this section apply to the manufacturing process and are not appropriate for determining the compliance status of a gasoline dispensing facility.

1. TLS CONSOLE

a. Every Veeder-Root TLS Console equipped with MAG Series Tank Inventory Probe Sensor is built, tested and manufactured as an Automatic Tank Gauge System. The TLS Console has been third-party tested by Midwest Research Institute as a UST fuel leak detection system meeting Volumetric Tank Tightness Testing Method standards.

b. Every Veeder-Root TLS Console has been designed and manufactured to have an Operating Temperature Range of 32°F to 104°F (0°C to 40°C) and Storage Temperature Range of –40°F to 162°F (-40°C to +74°C).

c. Every Veeder-Root TLS Console system including software, sensors and modules have been designed and is Underwriters Laboratories (UL), Canadian Standards Association (CSA), and Canadian Underwriters Laboratories (cUL) approved for operation near potentially hazardous fuel storage tanks.

d. Every TLS Console system including software, sensors and modules have been designed and tested in accordance with ISO-9001 manufacturing quality standards.

2. ISD SOFTWARE

a. Every Veeder-Root TLS Console with ISD software is manufactured to the specifications that passed the operational test and is compliant with CP-201 ISD performance standards and specifications.

b. Every Veeder-Root TLS Console with ISD software has been designed, manufactured and tested to continually monitor the connectivity and operability status of all ISD sensors and modules. All TLS Console ISD software has been designed, manufactured and tested to issue a visual, audible as well as printed notification upon failure of the connectivity or operability status of ISD sensors and modules.

3. VAPOR FLOW METER

a. Every Veeder-Root ISD Vapor Flow Meter is designed, tested and manufactured to interface to the TLS Console system. The ISD Vapor Flow Meter has been designed and tested for measuring flow between 1 - 30 GPM in HC concentrations between 0 – 100% saturation across a –40°F to 150°F (-40°C to 65°C) operating range.

4. VAPOR PRESSURE SENSOR

a. Every Veeder-Root ISD Vapor Pressure Sensor is designed, tested and manufactured to interface to the TLS Console system. The ISD Vapor Pressure Sensor has been designed and tested for measuring vapor pressure between –5 to +5 IWC in HC concentrations between 0 – 100% saturation across a –40°F to 150°F (-40°C to 150 °C) operating range.

5. TANK INVENTORY PROBE SENSOR

a. Every Veeder-Root MAG Series Tank Inventory Probe Sensor is designed, tested and manufactured to interface to the TLS Console System. The MAG Series Tank Inventory Probe Sensor has been designed and tested to have an Operating Temperature Range of 32°F to 104°F (0°C to 40°C) and Storage Temperature Range of –40°F to 162°F (-40°C to +74°C).

6. TLS CONSOLE MODULES

a. Every Veeder-Root TLS Console system module has been designed and tested to interface to the TLS Console System. The TLS Console system modules have been designed, tested and manufactured to have an Operating Temperature Range of 32°F to 104°F (0°C to 40°C) and Storage Temperature Range of –40°F to 162°F (-40°C to +74°C).

Option II - INCON Vapor Recovery Monitoring (VRM) Manufacturing Performance Standards and Specifications

The INCON VRM System and all components shall be manufactured in compliance with the performance standards and specifications in CP-201 (amended May 25, 2006), as well as the requirements specified in this Executive Order. All components (Exhibit 1) shall be manufactured as certified; no change to the equipment, parts, design, materials or manufacturing process shall be made unless approved in writing by the Executive Officer or Executive Officer delegate. Unless specified in Exhibit 2 or in the ***ARB Approved Installation, Operation and Maintenance Manual***, the requirements of this section apply to the manufacturing process and are not appropriate for determining the compliance status of a gasoline dispensing facility.

1. CONSOLE

a. Every INCON Console has been designed and manufactured to have an Operating Temperature Range of 32°F to 104°F (0°C to 40°C) and Storage Temperature Range of -4°F to 140°F (-20°C to +60°C).

b. Every INCON Console system including software, sensors and modules have been designed and is Underwriters Laboratories (UL) approved for operation near potentially hazardous fuel storage tanks.

c. Every INCON Console system including software, sensors and modules have been designed and tested in accordance with ISO-9001 manufacturing quality standards.

2. VRM SOFTWARE

a. Every INCON Console with VRM software is manufactured to the specifications that passed the operational test and is compliant with CP-201 ISD performance standards and specifications.

b. Every INCON Console with VRM software has been designed, manufactured and tested to continually monitor the connectivity and operability status of all sensors and modules. All Console VRM software has been designed, manufactured and tested to issue a visual, audible as well as printed notification upon failure of the connectivity or operability status of sensors and modules.

3. VAPOR FLOW METER

a. Every INCON Vapor Flow Meter is designed, tested and manufactured to interface to the INCON Console. The Vapor Flow Meter has been designed and tested for measuring flow between 1 - 100 GPM in HC concentrations between 0 – 100% saturation across a -40°F to 140°F (-40°C to 60°C) operating range.

4. VAPOR PRESSURE SENSOR

a. Every INCON Vapor Pressure Sensor is designed, tested and manufactured to interface to the INCON Console. The Vapor Pressure Sensor has been designed and tested for measuring vapor pressure between -8 to +8 IWC in HC concentrations between 0 – 100% saturation across a -40°F to 140°F (-40°C to 60°C) operating range.

5. TANK INVENTORY PROBE SENSOR

a. Every INCON Magnetostrictive Probe is designed, tested and manufactured to interface to the INCON Console System. The Magnetostrictive Probe has been designed and tested to have an Operating Temperature Range of -40°F to 140°F (-40°C to 60°C) and Storage Temperature Range of -40°F to 140°F (-40°C to +60°C).

6. CONSOLE MODULES

a. Every Console system module has been designed and tested to interface to the INCON Console. The Console system modules have been designed, tested and manufactured to have an Operating Temperature Range of 32°F to 104°F (0°C to 40°C) and Storage Temperature Range of -4°F to 140°F (-20°C to +60°C).

7. DATA TRANSFER UNIT

a. Every INCON Data Transfer Unit is designed and tested to interface to the INCON Console and to each other. The Data Transfer Unit has been designed and tested to transmit data signals over a 120 VAC power line across a -20 F to 140 F (-28.9C to 60C) operating range.

Exhibit 4

Determination of Static Pressure Performance of the Healy Clean Air Separator
(Executive Orders VR-201-H and VR-202-H)

1 APPLICABILITY

Definitions common to all certification and test procedures are in:

D-200 Definitions for Vapor Recovery Procedures

For the purpose of this procedure, the term "ARB" refers to the California Air Resources Board, and the term "ARB Executive Officer" refers to the Executive Officer of the ARB or his or her authorized representative or designate.

1.1 This test procedure is used to quantify the vapor tightness of the Healy Clean Air Separator (CAS) pressure management system installed as part of a gasoline dispensing facility (GDF) under either Executive Order VR-201-H or VR-202-H.

2 PRINCIPLE AND SUMMARY OF TEST PROCEDURE

2.1 The Clean Air Separator, while isolated from the vapor recovery system, is evaluated for vapor integrity using a vacuum decay procedure. The vacuum decay after 5 minutes is compared with an allowable value. The allowable value is based upon the initial vacuum level when conducting the test using the table provided in this test procedure.

2.2 A positive pressure decay procedure is included that conducts the same evaluation as the vacuum decay but with positive pressure. This test is conducted if there is insufficient vacuum (not greater than – 2.00" wc) to conduct the vacuum decay. Districts have the authority to specify in the permit conditions that this positive pressure test is to be conducted even if the vacuum test has been conducted.

3 RANGE

3.1 The full-scale range of the electronic measuring device shall not exceed 0-20.00" wc with a minimum accuracy of not less than 0.25 percent of full-scale.

4 INTERFERENCES

4.1 Leaks in the piping for the Clean Air Separator could bias the test results toward non-compliance.

4.2 Introduction of gaseous nitrogen into the system at flow rates exceeding 4 CFM (240 CFH) may bias the results of the test toward non-compliance. Only gaseous nitrogen shall be used to conduct this test.

4.3 Pressurizing the Clean Air Separator bladder greater than 14.00” wc could damage the bladder, biasing the test toward non-compliance.

4.4 Thermal Bias for Electronic Manometers

Electronic manometers shall have a warm-up period of at least 15 minutes followed by a drift check of 5 minutes. If the drift exceeds 0.01” wc, the instrument should not be used.

5 APPARATUS

5.1 Nitrogen

Use commercial grade gaseous nitrogen in a high pressure cylinder, equipped with a two-stage pressure regulator.

5.2 Pressure Measurement Device

Use an electronic pressure measurement device to monitor the pressure decay in the Clean Air Separator. The pressure measurement device shall, at a minimum, be readable to the nearest 0.01” wc.

5.3 Test Port Assembly

Use a test port assembly constructed similar to the one in Figure A. The assembly should have an 8 oz. Pressure Relief valve, to ensure that the Clean Air Separator is not over pressurized. The Model 9968 Clean Air Separator Test Port Assembly can be purchased from Healy Systems, Inc.

Figure A

Clean Air Separator Test Port Assembly

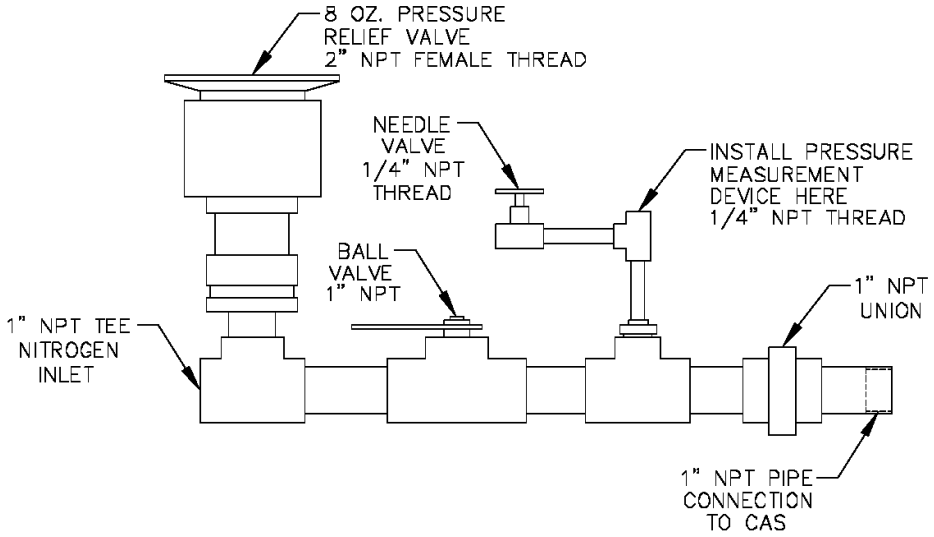

5.4 Stopwatch

Use a stopwatch accurate to within 0.2 seconds.

5.5 Flow Meter

Use a flow meter to determine the required pressure setting of the delivery pressure gauge on the nitrogen supply pressure regulator. This pressure shall be set such that the nitrogen flow rate is between 2.0 CFM (120 CFH) and 4.0 CFM (240 CFH).

5.6 Leak Detection Solution

Any liquid solution designed to detect vapor leaks may be used to verify the pressure integrity of the test equipment prior to conducting the test.

5.7 Condensate Collection Vessel

A container approved for use with gasoline that can hold at least a half gallon of material.

5.8 Graduated Cylinder

A graduated cylinder suitable for use with gasoline capable of measuring to the nearest ounce or mL.

6 PRE-TEST PROCEDURES

6.1 The following safety precautions shall be followed:

6.1.1 Only gaseous nitrogen shall be used to pressurize the system.

6.1.2 An 8 oz. pressure relieve valve shall be installed on the Test Port Assembly to prevent the possible over-pressurizing of the Clean Air Separator.

6.1.3 A ground strap should be employed during the introduction of nitrogen into the system.

6.2 There shall be no Phase I bulk product deliveries into or out of the gasoline storage tank(s) within the three (3) hours prior to the test or during the performance of this test procedure.

6.3 All pressure measuring device(s) shall be bench calibrated using a reference standard. Calibration shall be performed at 20, 50, and 80 percent of full scale. Accuracy shall be within two percent at each of these calibration points. Calibrations shall be conducted on a frequency not to exceed 180 days. Calibration documentation shall be maintained with the equipment at all times.

6.4 Use the flow meter to determine the nitrogen regulator delivery pressures that correspond to nitrogen flow rates of 2.0 CFM (120 CFH) and 4.0 CFM (240 CFH). These pressures define the allowable range of delivery pressures acceptable for this test procedure. The flow meter shall be connected in-line between the nitrogen supply regulator and the Test Port Assembly during pressurization. The flow meter may be connected in-line between the nitrogen supply regulator and the Test Port Assembly during the test.

6.5 The electronic pressure measurement device shall be subject to warm-up and drift check before use; see Section 4.5.

6.6 The four ball valves used in the installation of the Clean Air Separator are lockable and shall be locked in the position shown in Figure 2B-2 or 2B-2H of Exhibit 2 and in Figure 1 or Figure 1H of this Exhibit during normal operation. Figure 1 and 2B-2 apply to vertical CAS installations and Figure 1H and 2B-2H apply to horizontal CAS installations. The four padlocks provided by Healy Systems, Inc. in their installation kit are keyed the same. However, it is possible that one or more of the padlocks on the Clean Air Separator could have been replaced (seizing, damage, broken key, etc.). Conducting this test will require a set of keys necessary to unlock all padlocks.

6.7 Verify that the Clean Air Separator is in its normal operating configuration by confirming that all components are as indicated (See Figure 1 or Figure 1H):

Valve “A” - Open
Valve “B, C and D” - Closed
Pipe End “E” - Plugged
Tee Branch “F” - Plugged

Figure 1

Normal Clean Air Separator Operating Configuration

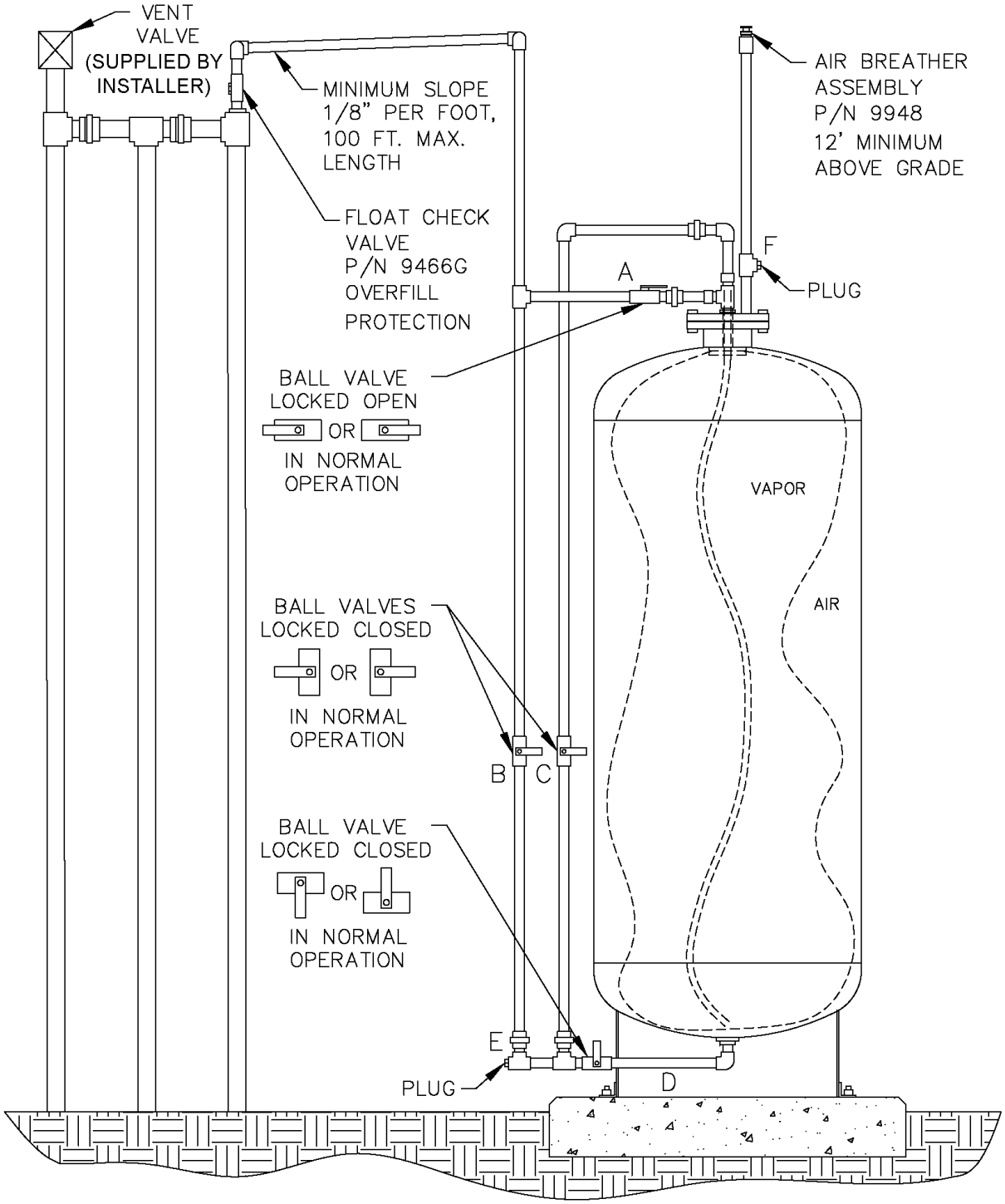

Figure 1H

Normal Clean Air Separator Operating Configuration

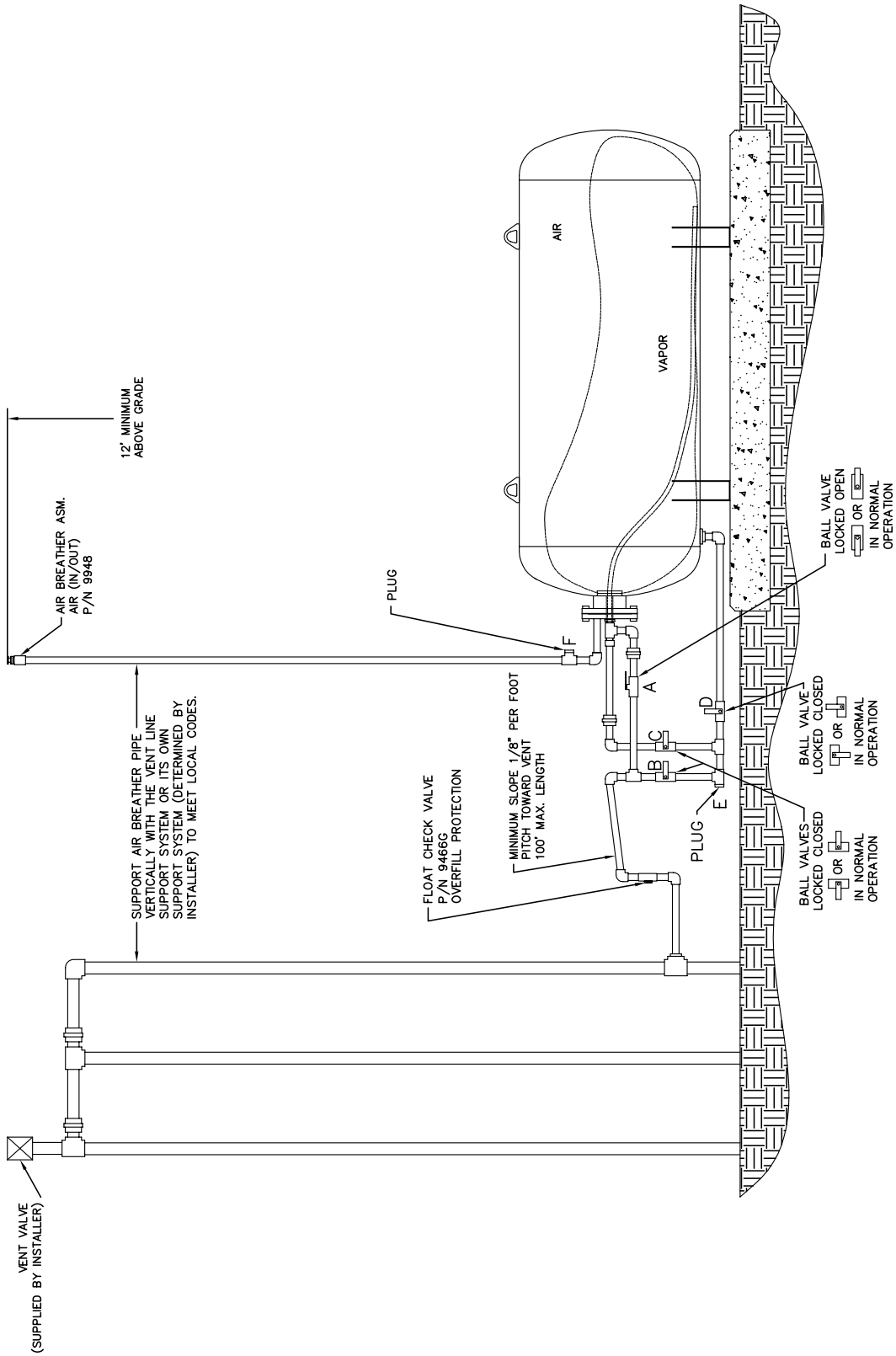

6.8 Installing the Test Port Assembly

6.8.1 Open the ball valve marked “B”, shown in Figure 1 or Figure 1H. This ensures that if there is any condensate in the primary connection line to the Clean Air Separator it will drop down into the lower section of the piping configuration, so that it can be measured. Close the valve after approximately 30 seconds.

6.8.2 Position the condensate collection vessel below plug “E” prior to removing it. Remove the 1” plugs from locations “E” and “F” from Figure 1 or Figure 1H. Transfer the collected condensate into the graduated cylinder. If there is more than 16 oz. (473 mL) of liquid condensate, the bladder and vapor processor vessel must be drained. Conduct the bladder and vessel draining procedures from the Clean Air Separator section of the ***ARB Approved Installation, Operation and Maintenance Manual***.

Note: Depending upon the size of the graduated cylinder and the amount of condensate, it may take multiple transfers from the condensate collection vessel to get the total condensate measurement.

6.8.3 Install the Test Port Assembly to the Clean Air Separator at location “E”. See Figure 2 or Figure 2H. Figure 2 applies to vertical CAS installations and Figure 2H applies to horizontal CAS installations.

6.8.4 Connect the gaseous nitrogen supply to the Test Port Assembly. See Figure 2 or Figure 2H.

6.8.5 Check the test equipment and piping isolated from normal Clean Air Separator operation by the ball valves “B, C and D” by pressurizing with nitrogen to a pressure of 4” wc ± 1” wc and closing the ball valve on the Test Port Assembly. Use leak detection solution. Tighten as necessary. The test equipment shall have no leaks.

6.8.6 Open the needle valve on the Test Port Assembly to bleed the pressure off the equipment. Keep ball valve on Test Port Assembly closed.

Figure 2

Clean Air Separator in Configuration to Conduct Test

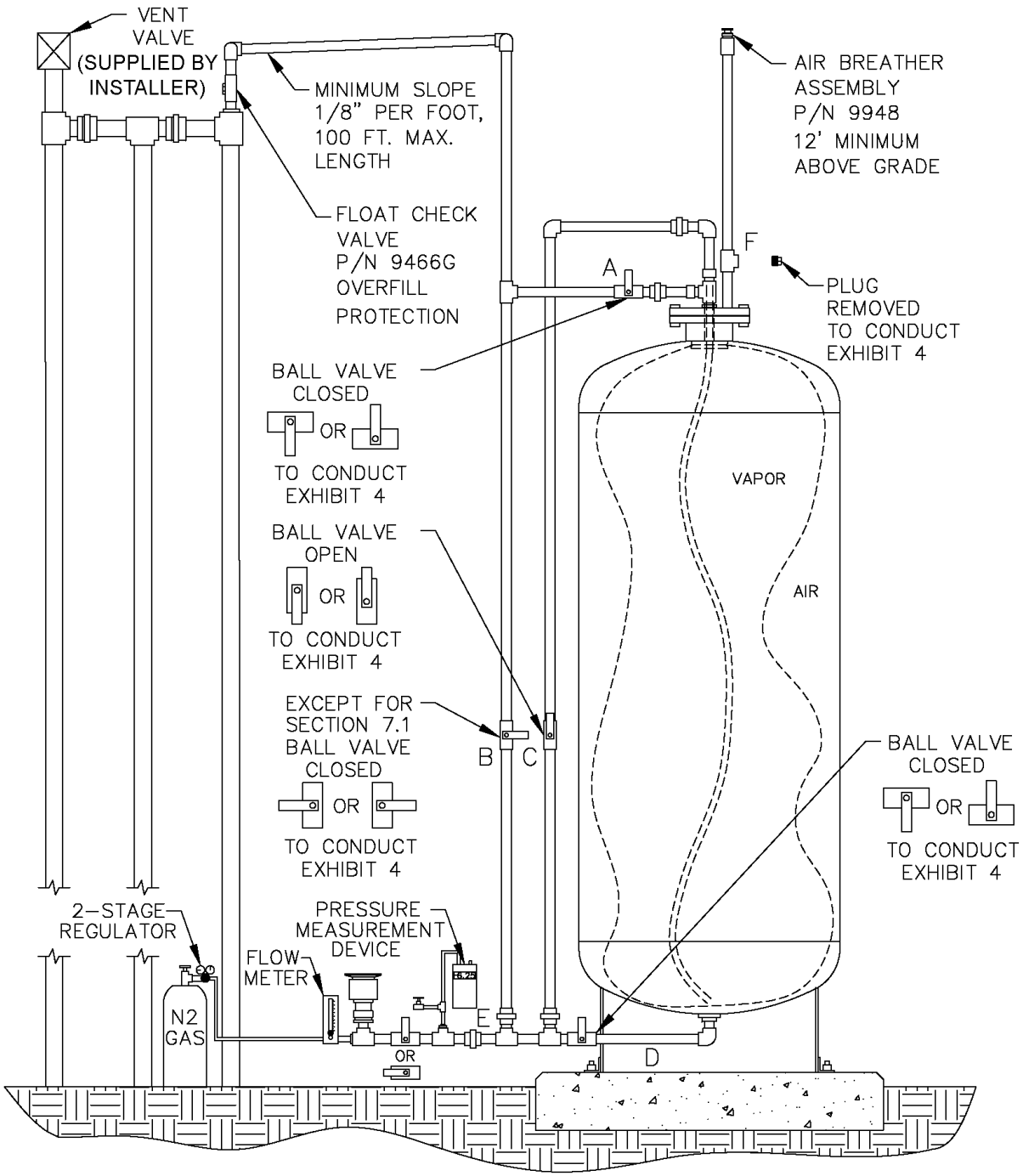

Figure 2H

Clean Air Separator in Configuration to Conduct Test

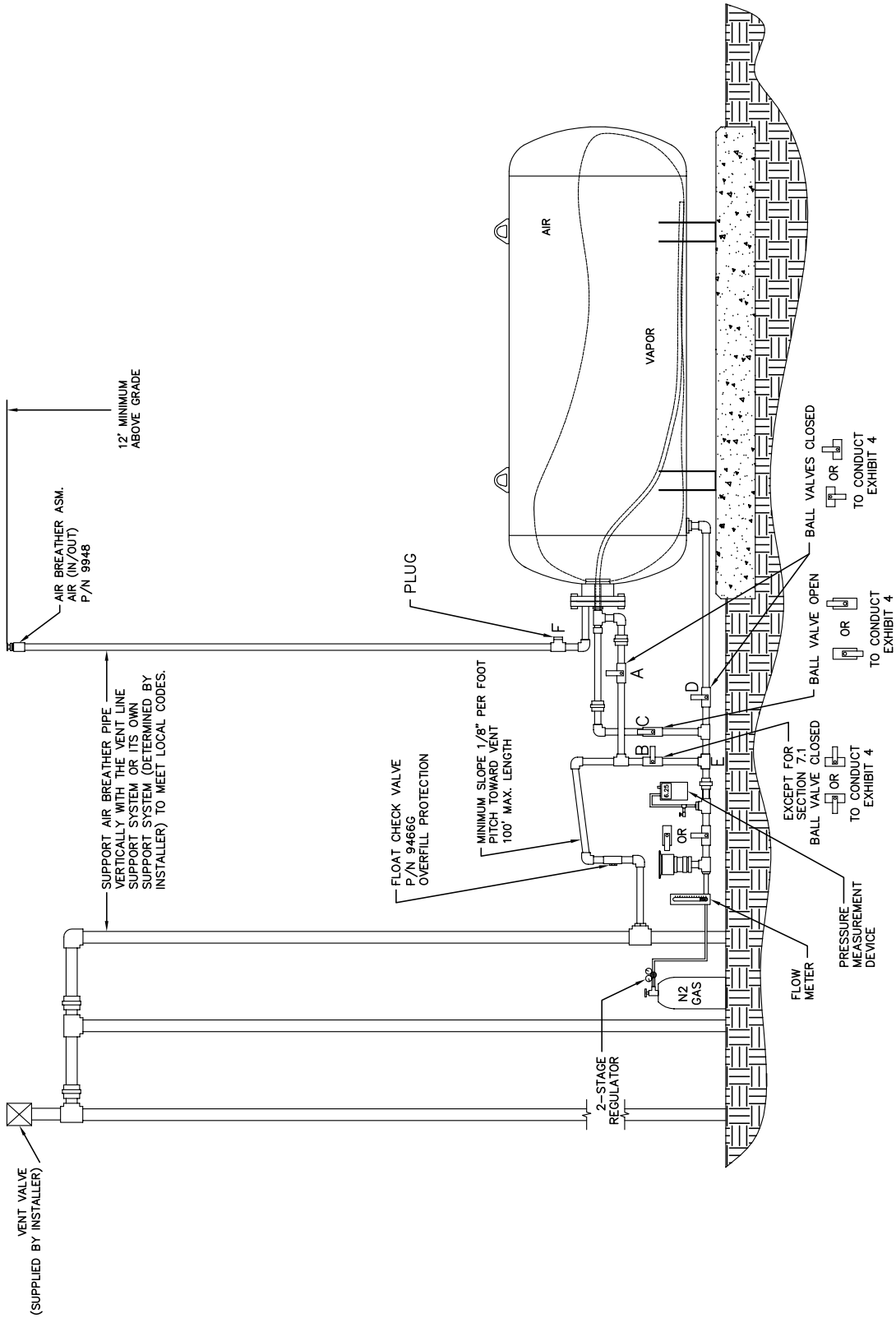

7 TESTING

7.1 Open the ball valve marked “B” from Figure 2 or Figure 2H. The pressure measurement device installed on the Test Port Assembly should now be reading UST and Clean Air Separator ullage pressure (or vacuum).

7.2 If the station vacuum is greater than (more negative) than -2.00” wc, then proceed to Section 7.2.1. If less than –2.00” wc, then proceed to Section 7.3:

7.2.1 Close the ball valves marked “A” and “B” from Figure 2.

7.2.2 Open the ball valve marked “C” from Figure 2 and wait one minute.

7.2.3 If necessary, use the needle valve on the Test Port Assembly to bleed air into the bladder until the vacuum level reaches as close to a whole number on the pressure measurement device as the accuracy of the device will provide (ie. -2.00, -3.00, -4.00, -5.00, -6.00, -7.00, -8.00). Make sure the needle valve is closed. Record this vacuum and start the stop watch to begin a 5 minute decay.

7.2.4 Record the vacuum at one-minute increments up to 5 minutes.

7.2.5 Using the information from Table 1, verify that the vacuum after 5 minutes is equal to or greater than the allowable minimum for the initial vacuum recorded from Section 7.2.3.

7.2.6 If the vacuum is greater than the allowable minimum, the Clean Air Separator passed the test.

7.2.7 If the vacuum is less than the allowable minimum, the Clean Air Separator failed the test.

TABLE 1
Allowable 5 Minute Vacuum Decay for Clean Air Separator

Vacuum at Start of Test (inches wc)	Allowable Minimum Vacuum after 5 min. (inches wc)
8.0	5.5
7.0	4.7
6.0	3.8
5.0	3.0
4.0	2.2
3.0	1.5
2.0	0.8

7.3 If the station vacuum is less than –2.00” wc (from Section 7.2), or at the direction of district (refer to Section 2.2), conduct the following:

7.3.1 Close the ball valves marked “A” and “B” from Figure 2.

7.3.2 Open the ball valve marked “C” from Figure 2.

7.3.3 Open the ball valve of the Test Port Assembly and flow nitrogen into the Clean Air Separator bladder at a flow rate between 2 and 4 CFM until the pressure in the bladder reaches 2.20” wc.

7.3.3.1 Depending upon the nitrogen flow rate used, the bladder could take up to 30 minutes to fill completely.

7.3.3.2 Because of the close proximity of the pressure measurement device to the nitrogen inlet of the Test Port Assembly, the pressure measurement device may read a higher pressure when nitrogen is flowing. The pressure measurement device is usually steady, but will start to increase rapidly when the bladder is getting full.

7.3.3.3 Periodically stopping nitrogen flow will provide an accurate reading of the pressure in the bladder.

7.3.4 Once the pressure reaches 2.20” wc, shut off the flow of nitrogen to the Clean Air Separator bladder and close the ball valve of the Test Port Assembly.

7.3.5 Wait 5 minutes or until pressure stabilizes above 2.00” wc. If the pressure does not stabilize, repeat steps 7.3.3 and 7.3.4.

7.3.6 Use the needle valve on the Test Port Assembly to bleed off the nitrogen until the pressure reaches 2.00” wc. Make sure the needle valve is closed. Record the pressure.

7.3.7 Start the stop watch to begin a 5 minute decay.

7.3.8 Record the pressure in one-minute increments up to 5 minutes.

7.3.9 If the pressure in the bladder is greater than 1.77” wc at the end of 5 minutes, then the Clean Air Separator passed the test.

7.3.10 If the pressure in the bladder is less than 1.77” wc at the end of 5 minutes, then the Clean Air Separator failed the test.

7.4 If the bladder was evaluated using the vacuum procedure (Section 7.2), close the ball valve “C” to keep it in a vacuum condition. If the bladder was evaluated using the pressure procedure (Section 7.3), open the needle valve on the Test Port Assembly to bleed off all pressure from the bladder.

7.5 Close the ball valve marked “C”, if not already done.

7.6 Remove the Test Port Assembly from location “E” and install the 1” pipe plug. Use a pipe sealant approved for use with gasoline on the threads and tighten to 60 ft-lbs.

7.7 Install the 1” pipe plug to location “F”. Use a pipe sealant approved for use with gasoline on the threads and tighten to 60 ft-lbs.

7.8 Open the ball valve marked “A”. Lock all ball valves using the padlocks.

7.9 The Clean Air Separator should now be in normal operation configuration. Verify this by using the outline from Section 6.7 and Figure 1 or Figure 1H.

8 REPORTING

8.1 Record test data on the form shown in Figure 3. Districts may require the use of an alternate form, provided that the alternate form includes the same minimum parameters as in Figure 3.

Figure 3

Data Form for Determination of Static Pressure Performance of the Healy Clean Air Separator for Executive Orders VR-201-H and VR-202-H

SOURCE INFORMATION	
GDF Name and address _____ _____ _____	GDF Represenative and title _____ _____ GDF Phone No. _____
Date and Time of Last Fuel Drop to GDF: _____ Date of Last Calibration of Pressure Measurement Device: _____	P/O #: _____ A/C#: _____ District Test Witness: _____

VACUUM TEST (Section 7.1 through 7.2.7)	
Vacuum at start of test, inches water column (7.2.3)	_____
Vacuum at one minute, inches water column	_____
Vacuum at two minutes, inches water column	_____
Vacuum at three minutes, inches water column	_____
Vacuum at four minutes, inches water column	_____
Final vacuum at five minutes, inches water column	_____
Allowable minimum vacuum, inches water column (from Table 1)	_____

POSITIVE PRESSURE TEST (Section 7.3 through 7.3.9)	
Pressure at start of test, inches water column (7.3.6)	_____
Pressure at one minute, inches water column	_____
Pressure at two minutes, inches water column	_____
Pressure at three minutes, inches water column	_____
Pressure at four minutes, inches water column	_____
Final pressure at five minutes, inches water column	_____
Allowable final pressure, inches water column (7.3.9)	1.77

Healy Certified Technician Name, Certification Number and Expiration Date	Test Company	Date Test Conducted

Exhibit 5

Vapor to Liquid Volume Ratio
(Executive Orders VR-201-H and VR-202-H)
(Healy Model 900 EVR Nozzle)

Definitions common to all certification and test procedures are in:

D-200 Definitions for Vapor Recovery Procedures

For the purpose of this procedure, the term "ARB" refers to the California Air Resources Board, and the term "Executive Officer" refers to the ARB Executive Officer, or his or her authorized representative or designate.

1. PURPOSE AND APPLICABILITY

1.1 This test procedure is used to quantify the Vapor to Liquid (V/L) Volumetric Ratio of the Healy Model 900 EVR Nozzle installed at gasoline dispensing facilities (GDF). This procedure provides a method to determine compliance with the V/L requirements specified in ARB Executive Orders (EO) VR-201-H and VR-202-H.

2. PRINCIPLE AND SUMMARY OF TEST PROCEDURE

2.1 A tight fitting adaptor is placed on the spout of a dispensing nozzle. The adaptor, which isolates vapor flow to the nozzle vapor collection ports, is connected to a volume gas meter. Gasoline is dispensed through the nozzle and the volume of vapors drawn through the vapor collection boot by the Phase II system vacuum pump is measured. The volume of vapor is recorded and compared with the volume of gasoline dispensed to determine the V/L Volumetric Ratio.

2.2 The test is conducted with the pressure/vacuum (P/V) vent valve(s) installed on the storage tank vent pipes.

2.3 The test procedure requires no modifications to the GDF being evaluated.

2.4 The test procedure may be conducted on a fueling point on one side of the dispenser with the other side of the dispenser either authorized to dispense fuel (but not dispensing), or with the other side dispensing fuel into a vehicle or another portable test tank. Conducting the test this way will be evaluating the V/L of the fueling point with the VP1000 vacuum pump running on its high speed setting.

3. BIASES AND INTERFERENCES

3.1 Nozzle spouts that are damaged such that the V/L adaptor cannot fit over the nozzle spout preclude the use of this test.

3.2 Refueling points not capable of achieving dispensing rates (see Equation 9-2) required for conducting the V/L test, as specified in Exhibit 2 of ARB Executive Orders VR-201-H and VR-202-H, preclude the use of this test for determining in-use compliance of certified systems.

3.3 Bagging, or otherwise sealing any nozzle associated with the vacuum pump serving the nozzle being tested, may bias the test results towards compliance. **The V/L test to verify compliance shall be conducted without "bagging" any of the nozzles served by a common vacuum device.**

3.4 If the nozzle being tested introduces liquid into the V/L adaptor, gas volume meter or the adaptor supply hose, the V/L of that nozzle shall be deemed a failure of the V/L standard.

3.5 Do not drain or remove liquid in either the vapor passage of the hoses or the dispenser vapor piping prior to performing the test. Draining of this liquid gasoline will bias the test toward compliance.

3.6 The O-ring in the V/L adaptor that is not properly lubricated may bias the results toward noncompliance. See Section 5.7 for lubrication requirements. Motor oil (any weight) is acceptable for lubricating the O-ring. Contact Healy Technical Services with any questions about other lubricants that may be used in conducting this test.

3.7 Conducting V/L testing with an improperly conditioned portable test tank (not saturated with gasoline vapors) will bias the test results of the as found V/L of the fueling point. Refer to Section 6.6 for proper portable test tank conditioning.

4. SENSITIVITY, RANGE, AND ACCURACY

4.1 The maximum rated capacity of the gas volume meter shall be at least 800 CFH and not greater than 3,000 CFH.

4.2 The minimum rated capacity of the gas volume meter shall be 25 CFH.

4.3 The minimum readability of the gas volume meter shall be 0.01 cubic feet.

4.4 Accuracy, determined during calibration, will be $\pm$ 5 percent of the gas volume meter reading.

5. EQUIPMENT

5.1 Vapor to Liquid Adaptor and Surrogate Spout

A **Vapor to Liquid Adaptor**. Only the Healy Systems, Inc. V/L Test Sleeve (figures 1, 4 and 5), Part No. 8034-1, can be used to conduct V/L testing on the Healy Phase II EVR System (Executive Order VR-201 series or Executive Order VR-202 series). The nominal inside diameter of the flexible tubing shall be between 0.75 and 1.00 inches, and the length of the tubing shall be between 3.0 and 6.0 feet.

B **Surrogate Spout**. Only the Healy Systems, Inc. V/L Surrogate Spout (figures 1 and 5), Part No. 8175, can be used to conduct the pre-test and post-test leak check.

5.2 Gas Volume Meter. Use a gas volume meter to measure the volumetric flow rate through the V/L adaptor. The meter shall be equipped as shown in Figure 2 and the maximum allowable pressure drop(s) (determined by the manufacturer) across the meter shall be:

For a meter with a maximum rated capacity of 1000 CFH through 3,000 CFH:
1.10 inches H_2O at a flowrate of 3,000 CFH
0.05 inches H_2O at a flowrate of 30 CFH

For a meter with a maximum rated capacity of 800 to 1,000 CFH:
0.70 inches H_2O at a flowrate of 800 CFH
0.04 inches H_2O at a flowrate of 16 CFH

See Section 6.2 for further gas volume meter specifications.

5.3 Volume Gas Meter Inlet Manifold. This manifold is designed to return the vapors displaced from the portable gasoline tank assembly, at atmospheric pressure, to the inlet of the gas volume meter. This manifold shall be two (2.0) inches minimum inside diameter pipe. The intake passage of the manifold shall be no shorter than 6.0 inches and no longer than 18.0 inches. See Figures 2 and 4.

Figure 1

Healy Vapor To Liquid (V/L) Adaptor and Surrogate Spout Assembly

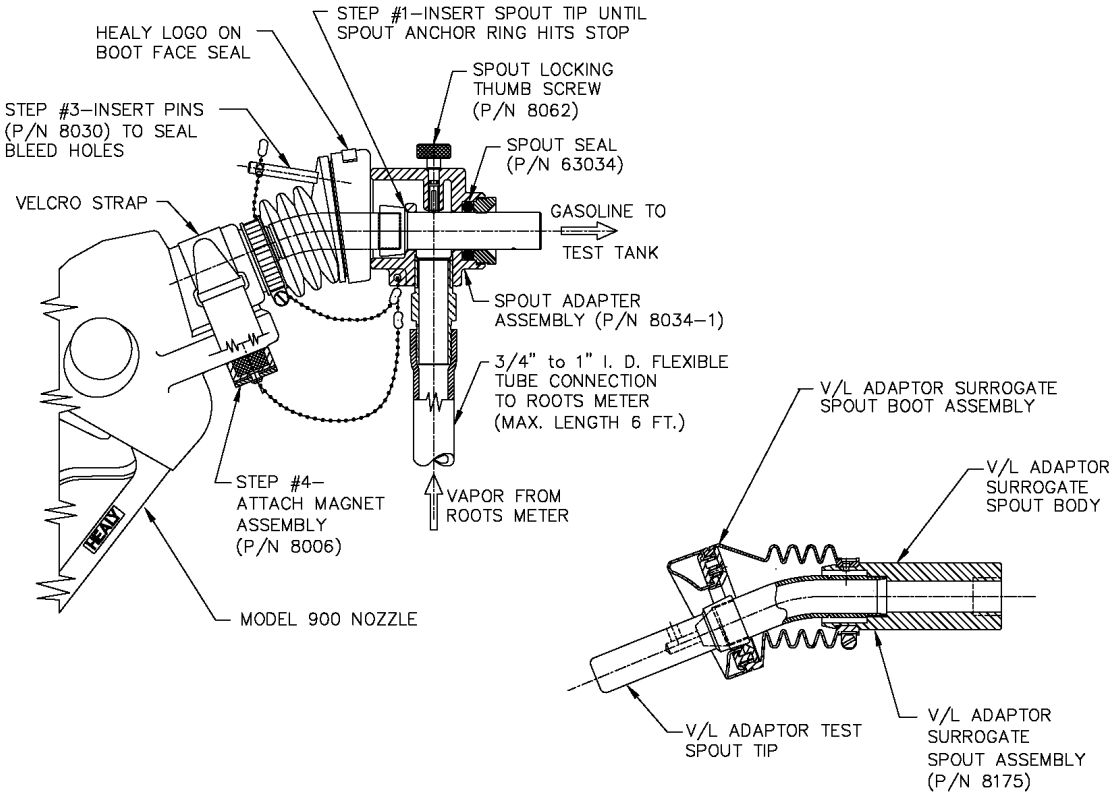

NOTE: The thumbscrew and Healy logo on top of the nozzle boot face seal must be in vertical alignment to imitate fueling an unleaded vehicle.

Figure 2

Gas Volume Meter and Vapor To Liquid Adaptor

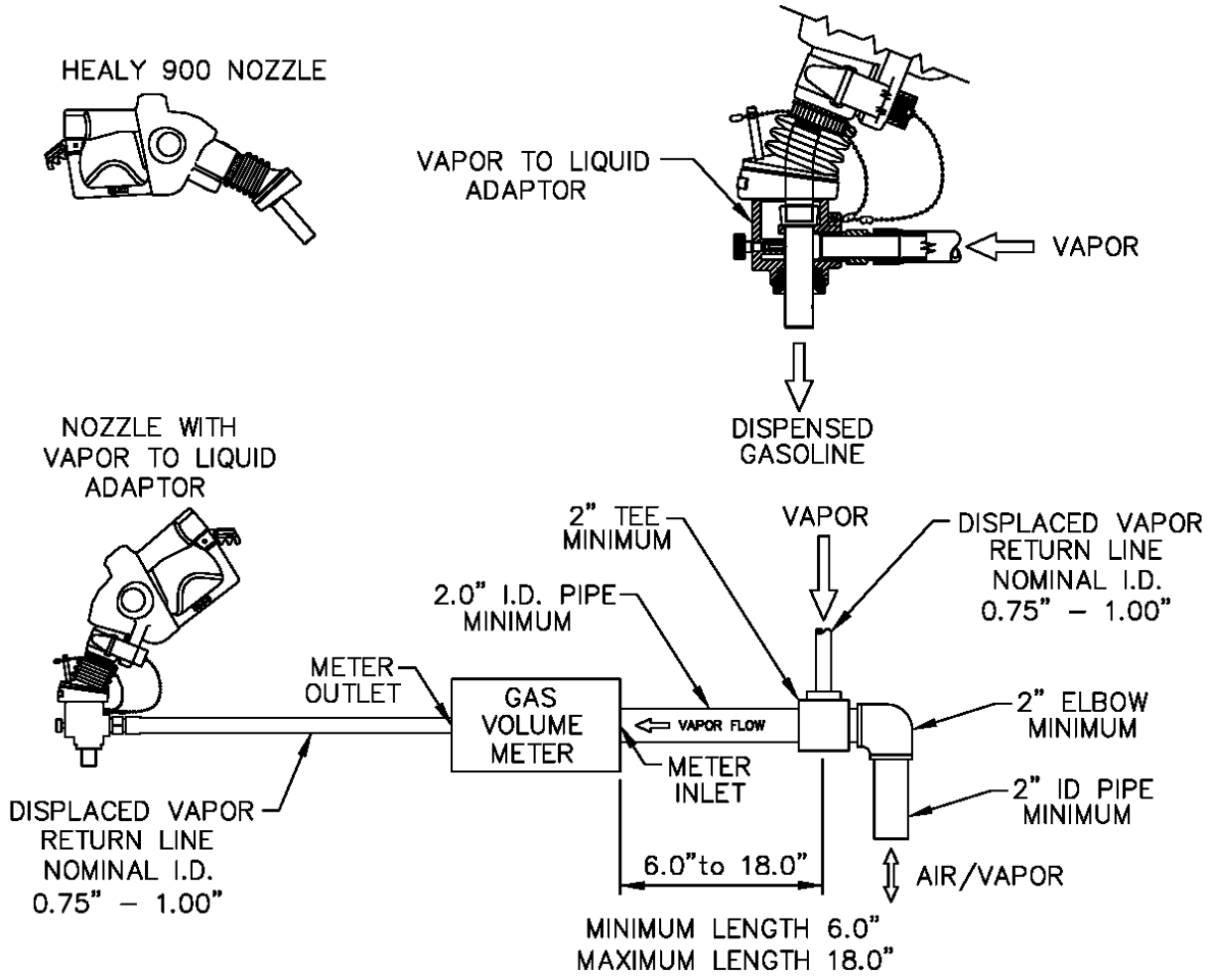

5.4 Liquid Volume Meter. Use the totalizer on the gasoline dispenser to measure the volume of gasoline dispensed during the test.

5.5 Portable Gasoline Tank Assembly. A portable tank, meeting fire safety requirements for use with gasoline, shall be used to receive the gasoline dispensed during this test. The tank shall have sufficient volume so that at least 4.5 gallons may be dispensed prior to activating the primary shutoff mechanism of the dispensing nozzle. Portable tanks shall have a permanent label or mark indicating the total fuel capacity in gallons. Tank material, likely to provide contact with the nozzle spout, or V/L adaptor, during the entire dispensing event, shall be constructed of aluminum or brass or other materials approved by the local fire codes for such application. The tank and required plumbing configuration is shown in Figure 3 and Figure 4. This configuration permits a portion of the vapors displaced during testing to be returned to the underground storage tank (UST). The minimum and maximum dimensions shown in Figure 2 and Figure 4 shall be adhered to in all cases.

5.6 Stopwatch. Use a stopwatch accurate to within 0.2 seconds.

5.7 Lubricant. Appropriate lubricant shall be used to ensure a leak-tight seal between the O-ring in the V/L adaptor and the nozzle spout. Motor oil (any weight) is acceptable for lubricating the O-ring. Contact Healy Technical Services with any questions about other lubricants that may be used in conducting this test.

5.8 Leak Detection Solution. Any liquid solution designed to detect gaseous leaks may be used to verify the pressure integrity of test equipment during this test.

5.9 Pressure Measuring Device. An electronic pressure measuring device with a full scale range that shall not exceed 0-10 inches WC with a minimum accuracy of 0.5 percent of full scale. A 0-20 inches WC device may be used provided the minimum accuracy is 0.25 percent of full-scale.

Figure 3

Portable Tank Assembly

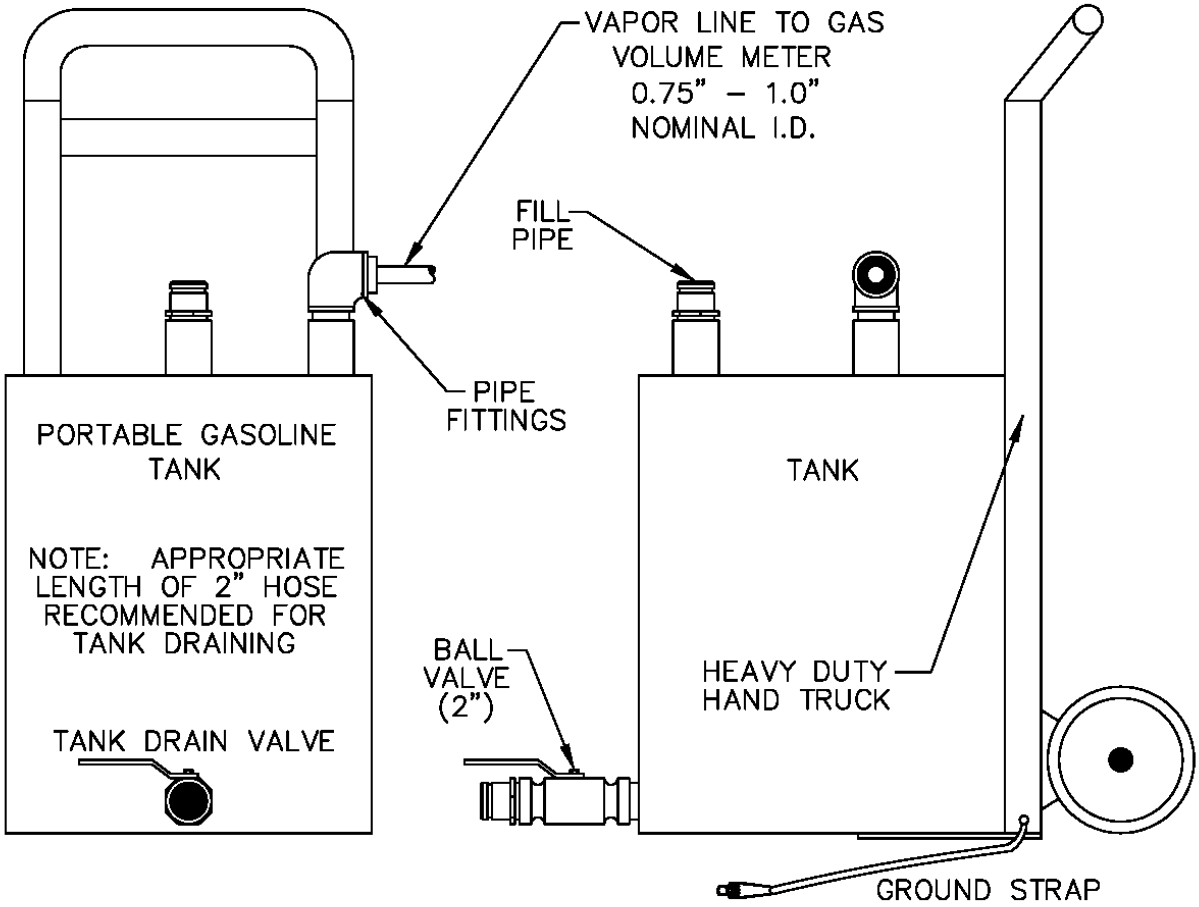

6. PRE-TEST PROCEDURES

6.1 Assemble the portable tank assembly and gas volume meter as shown in Figure 4. The minimum and maximum dimensions shown in Figure 4 shall be adhered to in all cases. **Ensure that the ground strap is properly connected to an acceptable ground**.

Note: A one-time test to verify proper design of the tee connection at the gas volume meter shall be conducted. Disconnect the V/L adaptor from the nozzle. Insert the nozzle into the portable test tank so that there is no visible gap between the nozzle boot/portable test tank fill pipe interface. Dispense between four and one-half and five (4.5 - 5.0) gallons into the portable test tank. The tee connection design passes the test if the displacement on the gas volume meter is less than 0.01 cubic feet. The result of this test shall be kept with the test equipment. If the tee connection is altered or changed, the above test must be repeated to ensure proper design.

6.2 The gas volume meter shall be calibrated, within 180 days prior to conducting this procedure. In addition, calibration shall be conducted after any repairs or alterations (changes to the operation or configuration of the meter) to the meter. Calibrations, at a minimum, shall be conducted at flowrates of 30, 60, and 90 CFH (3.7, 7.5, and 11.2 gallons/minute) in accordance with one of the following:

(a) ARB Air Monitoring Quality Assurance, Volume VI, Standard Operating Procedures for Stationary Source Emission Monitoring, January 1979, or

(b) US EPA Quality Assurance Handbook for Air Pollution Measurement Systems, Volume III, Stationary Source Specific Methods, or

(c) EPA Method 2A, Measurement of Gas Volume Through Pipes and Small Ducts (40 CFR Part 60, Appendix A), or

(d) Appropriate calibration procedures in accordance with California Department of Food and Agriculture, Division of Measurement Standards and County Department of Weights and Measures (title 4, CCR, section 3.33).

A copy of the most current calibration shall be kept with the meter.

Figure 4

Assembled Vapor to Liquid Volume Ratio Test Equipment

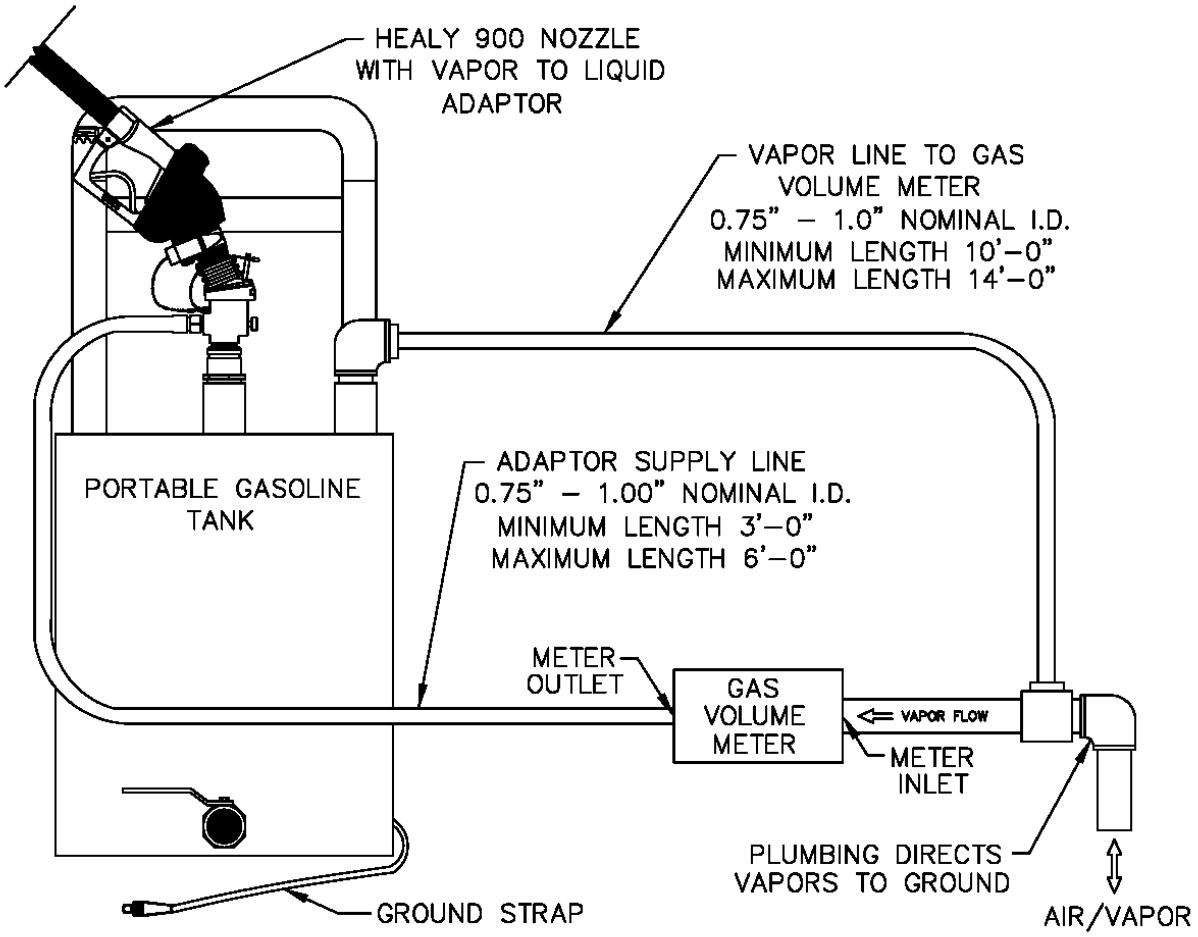

6.3 Verify that the O-ring in the V/L adaptor is present and in good condition. An O-ring with nicks, tears, or other deformations shall be replaced prior to the test. The O-ring shall be properly lubricated (see Section 5.7) to ensure a vapor tight connection.

6.4 Conduct a pre-test leak check of the V/L adaptor, the gas volume meter and the adaptor supply hose by connecting the V/L adaptor to a surrogate spout as shown in Figure 5 and described in Section 5.1B. Raise the test pressure to 5.00” ± 0.50” WC. There shall not be a pressure drop of more than 1.00” WC from the above starting pressure for 30 seconds from the start of the test. If the leak test passes, proceed with the V/L testing. If the leak test fails, proceed to isolate the source of the leak by pressurizing the test equipment again. Squirt liquid leak detector solution on interfaces and other potential leak sources and watch for the formation of bubbles. Once leak(s) are repaired, repeat the leak test procedure.

Note: Leak checks shall be conducted in a shaded area or away from direct sunlight. Leak checks may be conducted during V/L testing to ensure leak integrity of test equipment.

6.5 This test procedure shall be conducted with the storage tank pressure/vacuum (P/V) valve(s) installed and the Phase I vapor coupler(s) poppet(s) in the closed position with the adaptor dust cap(s) installed.

6.6 With the portable tank and V/L test equipment assembled, dispense gasoline into the portable test tank until at least 10% of the tanks total capacity has been reached. This will condition the portable tank with gasoline vapors. This conditioning shall be conducted each time the test tank is emptied prior to conducting testing at each facility.

6.7 All pressure measuring device(s) shall be bench calibrated using a reference gauge, incline manometer or NIST traceable standard at least once every six (6) months. Calibration shall be performed at 20, 50, and 80 percent of full scale. Accuracy shall be within five (5) percent at each of these calibration points.

Figure 5

Vapor To Liquid Adaptor and Gas Volume Meter Leak Test Assembly

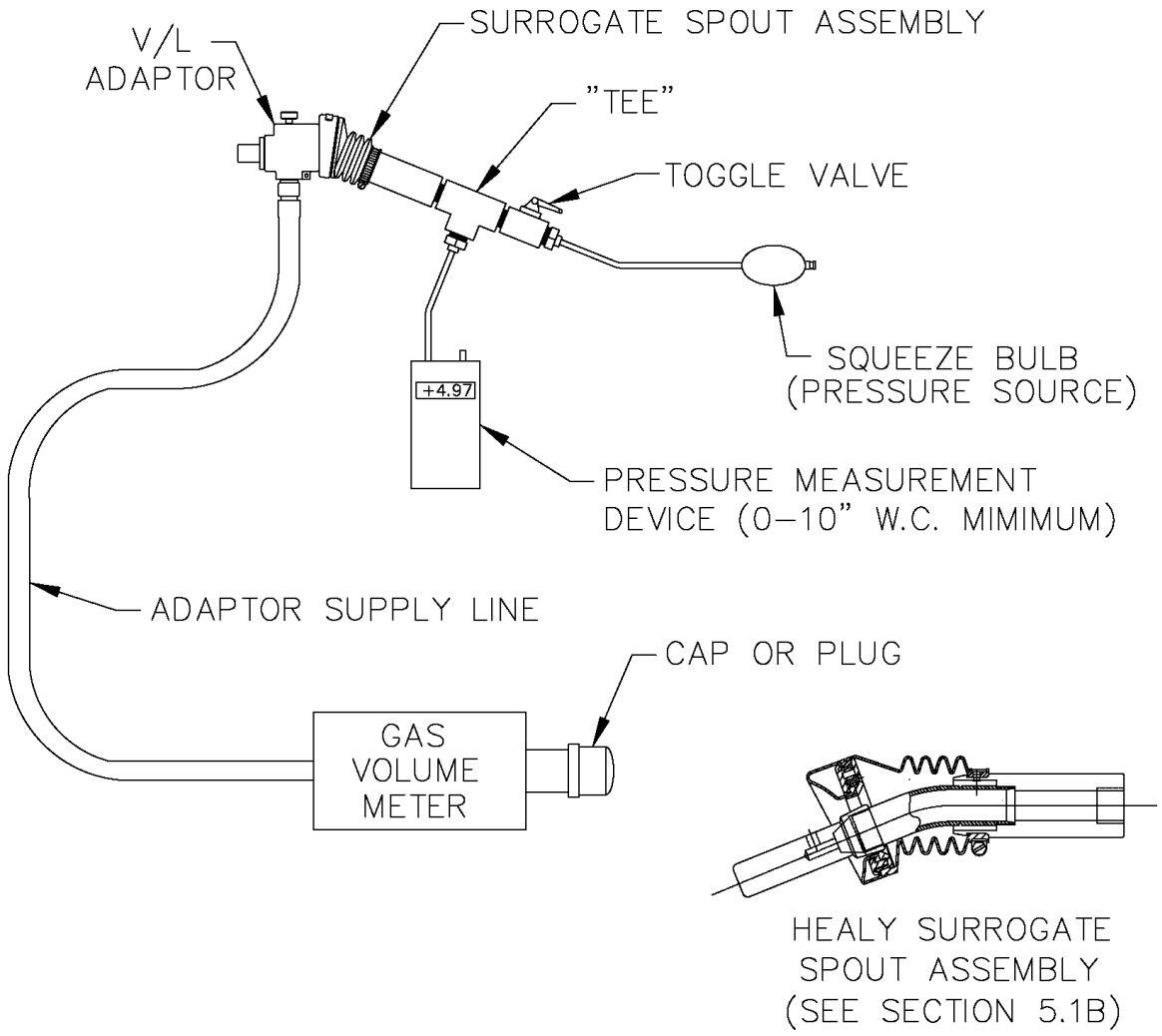

7. TEST PROCEDURES

7.1 Carefully connect the V/L adaptor to the nozzle spout as shown in Figure 1, isolating the vapor path of the nozzle and ensuring a tight connection.

7.2 Record the initial reading from the index of the gas volume meter on the Healy V/L Field Data Sheet at the end of this document. This initial reading shall be taken before each test. Do not use the final reading from the preceding test as the initial reading for the current test, unless it has been verified. This is necessary since the meter index may have moved due to the low pressure drop through the meter.

7.3 Reset the stopwatch and, if appropriate, reset the totalizer on the dispenser.

7.4 Holding the nozzle lever in the maximum hand-held position in order to dispense at the highest possible flow rate and begin dispensing into the portable gasoline tank. **Ensure that the nozzle spout is in contact with the grounded tank assembly during dispensing**. Start the stopwatch when the totalizer indicates dispensing has started.

7.5 Dispense between four and one-half (4.5) and five (5.0) gallons of gasoline.

If the nozzle being tested introduces liquid into the V/L adaptor, the gas volume meter or the adaptor supply hose, the V/L of that nozzle shall be deemed a failure.

7.6 Simultaneously stop both the stopwatch and gasoline dispensing.

7.7 The following data for each test shall be recorded on the Healy V/L Field Data Sheet:

7.7.1 Dispenser (pump) number

7.7.2 Fuel grade

7.7.3 Nozzle serial number (found below nozzle handguard)

7.7.4 Initial gas volume meter reading, in cubic feet

7.7.5 Initial totalizer reading from the dispenser, in gallons

7.7.6 Final gas volume meter reading, in cubic feet

7.7.7 Final totalizer reading from the dispenser, in gallons

7.7.8 Elapsed time during dispensing, in seconds

Note: Units other than cubic feet, gallons, and seconds may be used, provided that Equation 9-1 is appropriately modified.

7.8 If the V/L Volumetric Ratio, as determined by Equation 9-1 is between 0.95 –1.15, the grade point complies with the specifications.

7.9 If the V/L Volumetric Ratio is between 0.76 – 0.94, or greater than or equal to 1.16, conduct the test two additional times. Do not make adjustments to the gasoline dispensing or vapor recovery lines until all three test runs have been completed. Only adjustments to the V/L test equipment and the connection between the V/L adaptor and the nozzle will be allowed in order to ensure measurement accuracy. All other adjustments to the vapor recovery equipment, including but not limited to the vapor collection pump and the nozzle, are not allowed. If the V/L test equipment is adjusted, then the prior test run results for that grade point tested should not be used. Calculate the numerical average of the three test runs. If the average V/L value of these three test runs is within the allowable limits, compliance has been verified. If the resulting average is outside of the specified limits, the grade point tested does not comply with the specifications of the EO.

Note: Section 1.10 of the Healy 900 Nozzle portion of the **ARB Approved Installation, Operation and Maintenance Manual** provides instructions on making nozzle V/L adjustments.

7.10 If the initial V/L Volumetric Ratio is less than or equal to 0.75, this indicates a V/L failure of the grade point tested.

7.11 To avoid a build-up of gasoline, drain any condensed gasoline from the hoses between the gas volume meter and portable tank assembly, and the V/L adaptor and gas volume meter whenever fuel is emptied from the portable tank.

8. POST-TEST PROCEDURES

8.1 Remove the V/L adaptor from the nozzle.

8.2 Drain the dispensed product into the appropriate gasoline storage tank at the facility. **Ground the portable tank assembly to the storage tank before draining**. Do not mix product grades in the portable tank assembly without approval of the facility owner and use caution to drain the portable tank into the correct facility storage tank. If blending valves are utilized to produce product grades that do not have a dedicated storage tank, product from the blended grade shall be returned to the lower octane tank.

8.3 After concluding testing at the facility, perform a post-test leak check of the V/L adaptor, the gas volume meter and the adaptor supply hose by connecting the V/L adaptor to a surrogate spout as shown in Figure 5 and described in Section 5.1B. Raise the test pressure to 5.00” ± 0.50” WC. There shall not be a pressure drop of more than 1.00” WC from the above starting pressure for 30 seconds from the start of the test. The data collected during the V/L testing between the last valid test equipment leak check (see Section 6.4) and the post-test leak check is invalid if the test equipment fails this post-test leak check.

Note: Leak checks shall be conducted in a shaded area or away from direct sunlight.

8.4 Prior to transportation, the inlet and outlet of the gas volume meter shall be carefully sealed to prevent foreign matter from entering the meter.

8.5 The Authority Having Jurisdiction (AHJ) may be contacted on the requirements for storage and transportation of the portable test tank. This would typically be the local fire department.

9. CALCULATING RESULTS

9.1 The V/L Volumetric Ratio shall be calculated as shown in Equation 9-1.

$$V/L = \left[\frac{y\,(Vf - Vi)}{G_f - G_i} \right] \text{x } 7.481 \qquad \textbf{[Equation 9-1]}$$

Where:

V/L	=	Vapor to Liquid Volumetric Ratio, dimensionless
y	=	Correction factor for gas volume meter. See Equation 9-3
V_i	=	Initial gas volume meter reading, cubic feet
V_f	=	Final gas volume meter reading, cubic feet
G_i	=	Initial totalizer reading from the dispenser, gallons
G_f	=	Final totalizer reading from the dispenser, gallons
7.481	=	Conversion factor from gallons to cubic feet, gallons per cubic foot

9.2 The gasoline dispensing rate during the V/L test shall be calculated as shown in Equation 9-2.

$$Q_g = \left[\frac{G_f - G_i}{t} \right] \text{x } 60 \qquad \textbf{[Equation 9-2]}$$

Where:

Q_g	=	Gasoline dispensing rate, gallons per minute
G_I	=	Initial totalizer reading from the dispenser, gallons
G_f	=	Final totalizer reading from the dispenser, gallons
t	=	Elapsed time during dispensing event, seconds
60	=	Conversion factor, seconds per minute

9.3 The correction factor (determined during gas volume meter calibration) for correcting observed values of the gas volume meter shall be calculated as shown in Equation 9-3.

$$y = \left[\frac{V_r}{V_m} \right] \qquad \textbf{[Equation 9-3]}$$

Where:

y	=	Correction factor for the gas volume meter's observed reading, dimensionless
V_r	=	True volume from current calibration of gas volume meter, cubic feet
V_m	=	Corresponding observed reading from gas volume meter, cubic feet

10. REPORTING RESULTS

10.1 Report V/L test data and other information as required in the Healy V/L Field Data Sheet at the end of this document. Districts may require the use of alternate forms, provided they include the same minimum parameters as identified in the Healy V/L Field Data Sheet.

11. ALTERNATE PROCEDURES

11.1 This procedure shall be conducted as specified. Modifications to this test procedure shall not be used to determine compliance unless prior written approval has been obtained from the ARB Executive Officer, pursuant to Section 14 of Certification Procedure CP-201.

GDF Name and Address:	**Healy V/L Field Data Sheet**	Testing Firm Name and Address:
_____ _____ _____	Tee Connection Test Result (6.1) _____ ft^3 Date of Last Gas Volume Meter Calibration _____ Gas Volume Meter Correction Factor (9.3) _____ Pressure Measurement Device Calibration Date _____	_____ _____ _____ Phone No. ( )
Test Date/Time:		Test Performed by:_____ If Required by local district, provide Technician Certification Number:_____ Certification Expiration Date:
Pre-Test Leak Check: Initial/Final Pressures, in. H_2O _____ / _____ **Post-Test Leak Check:** Initial/Final Pressures, in. H_2O _____ / _____	**A/C #** _____ **P/O #** _____	District Test Witness _____ Applicable ARB Executive Order (circle one) VR-201 or VR-202 Allowable V/L Range 0.95 – 1.15

7.7.1 Pump #	7.7.2 Fuel Grade	7.7.3 Nozzle Serial #	7.7.5 Initial Dispenser Totalizer, Gallons	7.7.7 Final Dispenser Totalizer, Gallons	Total Gas Pumped, Gallons	7.7.8 Time, Seconds	9.2 Dispensing Rate, gpm	7.7.4 Initial Meter Reading, ft3	7.7.6 Final Meter Reading, ft3	7.8, 9.1 V/L	7.9 V/L Average (if necessary)	7.8, 7.9 or 7.10 Pass or Fail

Executive Order VR-202-H
Healy Phase II EVR System
Including In-Station Diagnostic (ISD) Systems

Exhibit 6

Vapor Recovery Equipment and Fuel Management Systems Limited Warranty

Healy Phase II EVR System Limited Warranty

Franklin Fueling Systems / Healy (FFS / Healy) products are warranted to the initial purchaser, and any subsequent purchaser within the warranty period, for workmanship, performance, and materials when properly installed, used and maintained using the **ARB Approved Installation, Operation and Maintenance Manual**. All FFS / Healy products, subassemblies, and raw materials are fully inspected and tested at the manufacturing facility. FFS / Healy warrants the workmanship and materials to be free of defects for a period in accordance with the provisions stated below:

- The equipment has been installed according to the **ARB Approved Installation, Operation and Maintenance Manual**.
- A Healy Certified Technician qualified to perform service on the defective equipment must perform warranty service. Only Healy Certified Technicians are allowed to perform warranty service. Use of service personnel other than qualified Healy Certified Technicians without prior written approval by FFS / Healy will void the warranty.
- Claims for warranty repair or replacement service must have a written “Returned Material Authorization” (RMA) from FFS / Healy, and must be shipped freight prepaid to FFS / Healy for inspection.
- FFS / Healy, upon inspection at its facilities, and after determination of a warranty claim, will, at its option, repair or replace defective parts returned to its factory. Repaired or replaced parts will be returned freight prepaid by FFS / Healy.
- FFS / Healy is not responsible for labor or materials necessary to disconnect or connect the warranted product for return to FFS / Healy.
- FFS / Healy reserves the right to make changes in the design or to make additions or improvements with respect to its products without incurring any obligation to modify or install same on previously manufactured products, upon written California ARB approval.
- FFS / Healy warrants the workmanship and materials of the following products to be free of defects and will comply with the performance standards of California ARB CP-201 for a period of one (1) year from the date of installation or eighteen months from the date of manufacture from FFS / Healy: Inverted coaxial hoses, Hose adapters, Flow limiters and Breakaways.
- EVR Nozzles 900 Series – New & Rebuilt: Healy Systems Inc. warrants the workmanship and materials to be free of defects and will comply with the performance standards of California ARB CP-201 for a period of one (1) year from the date of installation or eighteen months from the date of manufacture from FFS / Healy. Exclusions: This warranty excludes the field replaceable “rubber / plastic” parts at the front of the nozzle (i.e., boot, scuffguard, face seal assembly, etc.) or the spout or parts that have been subjected to misuse, mishandling or incorrect installation.

- Vacuum Pump – VP1000: FFS / Healy warrants the workmanship and materials to be free of defects and will comply with the performance standards of California ARB CP-201 for a period of one (1) year from date of installation or twenty-six months from the date of manufacture from FFS / / Healy. This applies to the vacuum pump and motor assembly only. The Hardware Kits, Vapor Kits, Electrical Kits and Interface modules are warranted for workmanship and materials to be free of defects for a period of one (1) year from date of installation or eighteen months from the date of manufacture from FFS / Healy.
- Clean Air Separator – FFS / Healy warrants the workmanship and materials to be free of defects and will comply with the performance standards of California ARB CP-201 for a period of five (5) years from the date of installation or 60 months from the date of manufacture from FFS / Healy. This warranty is void if the Clean Air Separator fails to meet the performance standards as a result from damage to the tank due to corrosion. The Lockable ball valves, Locks, Master key and Float check valve shipped with installation kit, which are warranted for one (1) year from the date of installation or eighteen months from the date of manufacture from FFS / Healy.
- General Exclusions: This warranty shall not apply to any product which has been altered in any way, which has been repaired by any party other than Healy Certified Technicians, or when such failure is due to misuse or conditions of use. Use of non-Healy replacement parts, the unauthorized addition of non-Healy items to equipment, and the unauthorized alteration of equipment void this warranty. FFS / Healy shall, as to each defect, be relieved of all obligations and liabilities under a components warranty if the vapor recovery system or components have been operated with any accessory, equipment, or a part not specifically approved by FFS / Healy and not manufactured by FFS / Healy to FFS / Healy design and specifications. FFS / Healy makes no warranty with respect to the performance of equipment or performance of services under this agreement, express or implied, and FFS / Healy hereby disclaims the implied warranties of merchantability and fitness for a particular purpose.
- This warranty shall not cover any FFS / Healy components that have been in contact with fuels containing greater than 15% methanol, 15% ethanol, or 15% MTBE by volume. Any component(s), which is exposed to M85 / E85 fuel (or other alcohol-rich fuel), is not covered under the FFS / Healy warranty.

This warranty is a limited warranty. Anything in the warranty notwithstanding, implied warranties for fitness, particular purpose and merchantability shall be limited to the duration of the express warranty. FFS / Healy expressly disclaims and excludes any liability for consequential or incidental damage for breach of any express or implied warranty.

Veeder-Root Environmental Equipment Warranty Policy

TLS-350R and TLS-350 Plus Monitoring Systems

We warrant that this product shall be free from defects in material and workmanship for a period of one (1) year from the date of installation or twentyfour (24 months) from the date of invoice, whichever occurs first. During the warranty period, we or our representative will repair or replace the product, if determined by us to be defective, at the location where the product is in use and at no charge to the purchaser. Lamps and fuses are not covered under warranty.

We shall not be responsible for any expenses incurred by the user.

This warranty applies only when the product is installed in accordance with Veeder-Root's specifications, and a Warranty Registration and Checkout Form has been filed with Veeder-Root by an authorized Veeder-Root Distributor. This warranty will not apply to any product which has been subjected to misuse, negligence, accidents, systems that are misapplied or are not installed per Veeder-Root specifications, modified or repaired by unauthorized persons, or damage related to acts of God.

If "Warranty" is purchased as part of the Fuel Management Service, Veeder-Root will maintain the equipment for the life of the contract in accordance with the written warranty provided with the equipment. A Veeder-Root Fuel Management Services Contractor shall have free site access during Customer's regular working hours to work on the equipment. Veeder-Root has no obligation to monitor federal, state or local laws, or modify the equipment based on developments or changes in such laws.

ISD Components (Vapor Flow Sensor, Vapor Pressure Sensor & Software)

We warrant that these components shall be free from defects in material and workmanship and will comply with the performance standards of the California ARB CP-201 section 10 as amended May 25, 2006 for a period of one (1) year from the date of installation or twenty four (24) months from the date of invoice, whichever occurs first. We will repair or replace the product if the product is returned to us transportation prepaid by the user, within the warranty period, and which has been subjected to misuse, negligence, accidents, systems that are misapplied or are not installed per the **ARB Approved Installation, Operation and Maintenance Manual**, modified or repaired by unauthorized persons, or damage related to acts of God. We shall not be responsible for any expenses incurred by the user.

FFS / INCON ISD System Warranty Policy

We warrant that this product shall be free from defects in material and workmanship for a period of one (1) year from the date of installation or twenty-four (24 months) from the date of invoice, whichever occurs first. During the warranty period, we or our representative will repair or replace the product, if determined by us to be defective, at the location where the product is in use and at no charge to the purchaser and any subsequent purchaser within the warranty period. Fuses are not covered under warranty.

We shall not be responsible for any expenses incurred by the user.

This warranty applies only when the product is installed in accordance with FFS / Incon's specifications, and a Warranty Registration Form has been filed with FFS / Incon by an authorized FFS / Incon Distributor. This warranty will not apply to any product which has been subjected to misuse, negligence, accidents, systems that are misapplied or are not installed per incon specifications, modified or repaired by unauthorized persons, or damage related to acts of God.

ISD Components (Vapor Flow Sensor, Vapor Pressure Sensor, Data Transfer Unit & Software)

We warrant that these components shall be free from defects in material and workmanship and will comply with the performance standards of the California ARB CP-201 for a period of one (1) year from the date of installation or twenty-four (24) months from the date of invoice, whichever occurs first. We will repair or replace the product which has not been subjected to misuse, negligence, accidents, systems that are misapplied or are not installed per the **ARB Approved Installation, Operation and Maintenance Manual,** modified or repaired by unauthorized persons, or damage related to acts of God if the product is returned to us transportation prepaid by the user, within the warranty period. We shall not be responsible for any expenses incurred by the user.

Exhibit 7

Nozzle Bag Test Procedure
(Executive Orders VR-201-H and VR-202-H)

Verification of the integrity of the vapor valve shall be performed on installed nozzles by use of the following test.

Note: The following procedure requires that all nozzles on a dispenser be bagged at the same time. Bagging only one nozzle on a dispenser during this procedure may bias the results toward compliance.

a. Seal all nozzles on a dispenser in plastic bags, using tape or other means to secure the bag around the base of the nozzle (see Figure 1). Any plastic bag large enough to enclose the nozzle and having a thickness of no greater than 2 mils can be used. In California, 12” x 26” x 2 mil thick bags are available from the Air Resources Board by calling 800-952-5588.

b. Initialize the dispenser for fueling as follows:

    1. Inform the station operator that you are running a test and ask the operator to initialize the dispenser; or

    2. Swipe a credit card in the dispenser card reader.

c. Activate the Healy vacuum pump by lifting one of the nozzles off the dispenser holster and selecting a grade of fuel. **Do not dispense any fuel**.

d. With the dispenser initialized and the vacuum pump activated, observe all bagged nozzles for 30 seconds. Any nozzle where the bag can be seen visually collapsing has a defective vapor valve and the dispenser shall be removed from service immediately.

e. Record the test results on the “Nozzle Bag Test Results” form provided in this Exhibit. Districts may require use of an alternate form, provided that the alternate form includes the same minimum parameters.

f. Remove the bags from all the nozzles tested and disengage the dispenser by returning the nozzles to the dispenser holsters.

g. Repeat steps a through f for each dispenser.

Figure 1

NOZZLE BAG TEST RESULTS

SOURCE INFORMATION		TEST COMPANY INFORMATION	
Facility (DBA) / Site Address:	Facility Representative / Title:	Test Company Name / Address	# of Nozzles:_____
Print Name	Print Name	Print Name	# Nozzles Tested:_____
Street Address	Title	Street Address	# Nozzles Passed:_____
City Zip	( ) Phone No.	City Zip	# Nozzles Failed: _____
District Inspector:	☐ P / O ☐ S / A ☐ A / C Number:	Date of Test:	# Nozzles not Tested: _____ Time of Test:

Dispenser	Gas Grade	Nozzle Type	Bag Collapse after 30 Seconds?
			☐ Yes ☐ No
			☐ Yes ☐ No
			☐ Yes ☐ No
			☐ Yes ☐ No
			☐ Yes ☐ No
			☐ Yes ☐ No
			☐ Yes ☐ No
			☐ Yes ☐ No
			☐ Yes ☐ No
			☐ Yes ☐ No
			☐ Yes ☐ No
			☐ Yes ☐ No
			☐ Yes ☐ No
			☐ Yes ☐ No
			☐ Yes ☐ No
			☐ Yes ☐ No
			☐ Yes ☐ No
			☐ Yes ☐ No
			☐ Yes ☐ No

Exhibit 8

Required Items in Conducting TP-201.3
(Executive Orders VR-201-H and VR-202-H)

The instructions below are required when conducting TP-201.3 for these systems. The tester shall document that each step was followed as indicated below and shall include this page of the Exhibit with the submission of TP-201.3 test results. Note that districts may require use of an alternate form to meet these requirements, provided the alternate form includes the same minimum parameters.

1. Prior to conducting TP-201.3, all four ball valves on the Healy Clean Air Separator (CAS) shall be closed, as shown in Figure 1 or Figure 1H, to isolate it from the Underground Storage Tank (UST) system to permit the pressurization of the UST system. Figure 1 applies to vertical CAS installations and Figure 1H applies to horizontal CAS installations.

2. Conducting TP-201.3 with any dispenser piping test valve in the closed position is **not** permitted. Any dispenser with a dispenser piping test valve in the closed position while conducting TP-201.3 will bias the test towards compliance.

3. After conducting TP-201.3, the four ball valves on the Healy Clean Air Separator (CAS) shall be locked in their normal operating positions as shown in Figure 2B-2 or 2B-2H, Exhibit 2 of Executive Orders VR-201-H and VR-202-H. Figure 2B-2 applies to vertical CAS installations and Figure 2B-2H applies to horizontal CAS installations.

Required Steps	Verification (please circle)
1. All four CAS ball valves closed before conducting TP-201.3	Yes No
2. All dispenser piping test valves open before conducting TP-201.3	Yes No
3. All four CAS ball valves in normal operating positions after conducting TP-201.3.	Yes No

Test Company: _____ Facility Name:_____

_____
Print Name (Technician) Signature Date

_____
Technician Certification Number and Expiration Date
(ICC or District Training Certification, as applicable)

Figure 1

Configuration of Healy Clean Air Separator to Conduct TP-201.3

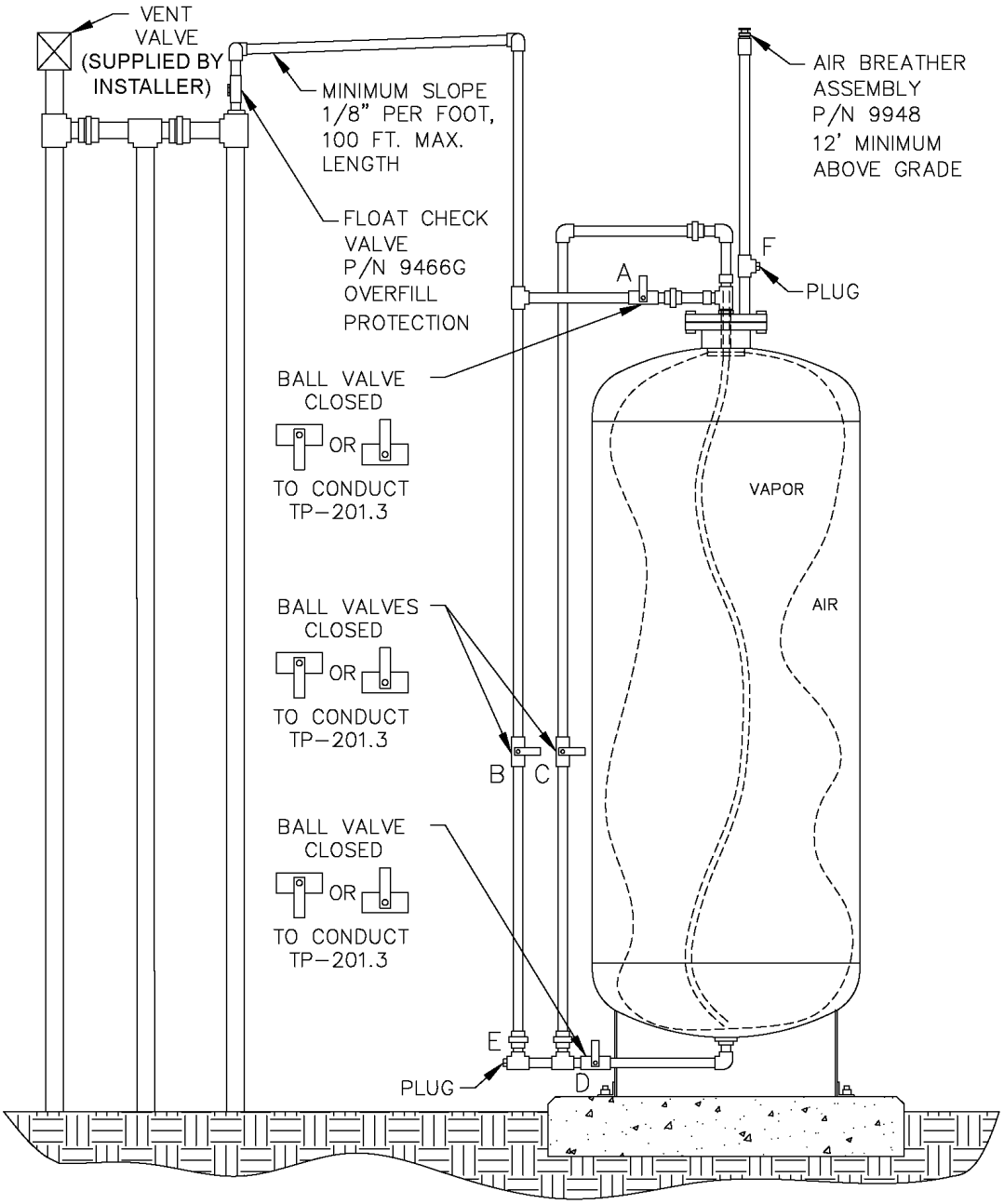

Figure 1H

Configuration of Healy Clean Air Separator to Conduct TP-201.3

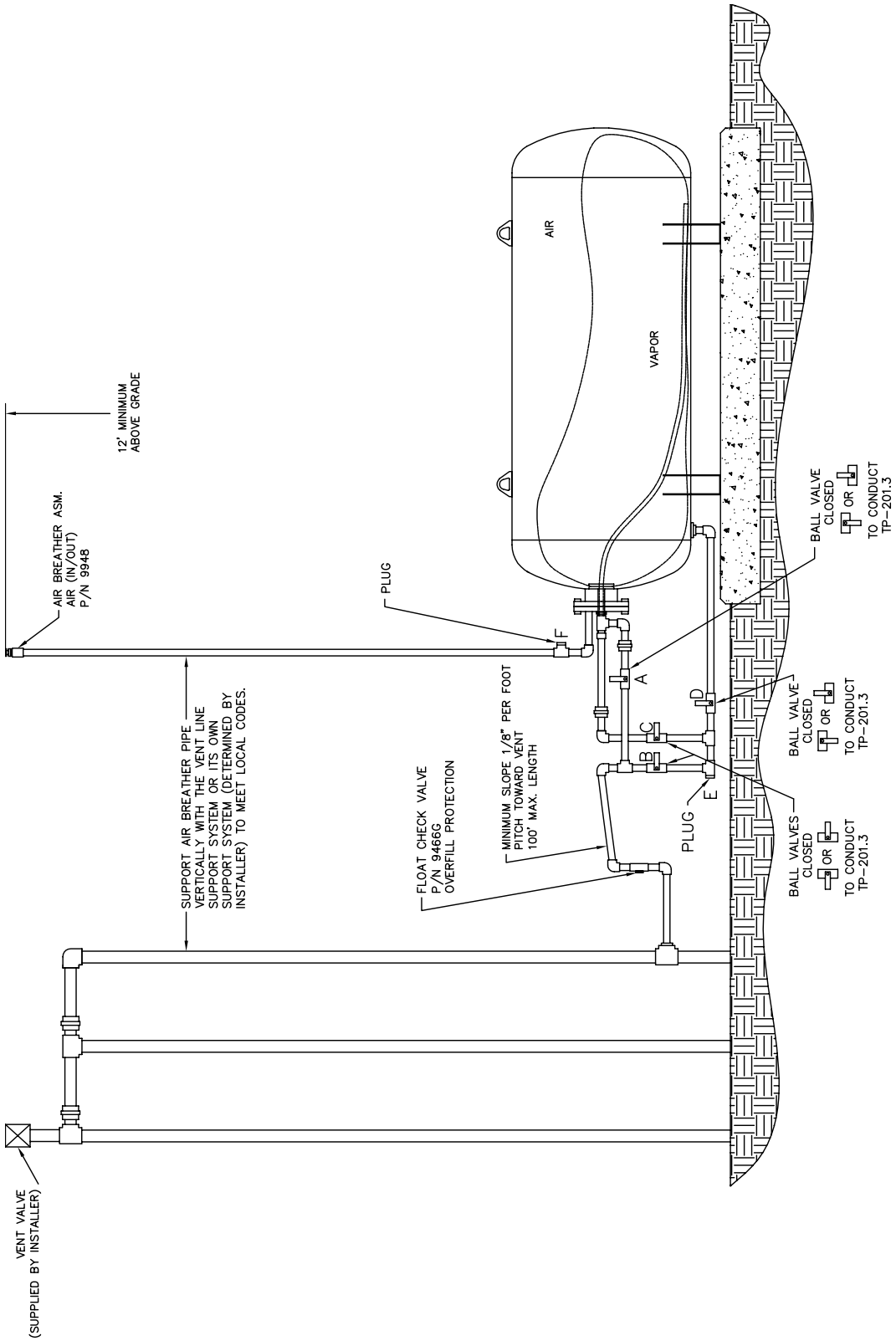

Executive Order VR-202-H
Healy Phase II EVR System
Including In-Station (ISD) System

Exhibit 9
ISD Operability Test Procedure

The following procedures shall be used at field sites to determine the operability of the Veeder-Root ISD system to satisfy the requirements documented in VAPOR RECOVERY CERTIFICATION PROCEDURE, CP-201, CERTIFICATION PROCEDURE FOR VAPOR RECOVERY SYSTEMS AT GASOLINE DISPENSING FACILITIES. Testing the ISD equipment in accordance with this procedure will verify the equipment's operability for Vapor Containment Monitoring and Vapor Collection Monitoring.

Veeder-Root's TLS console ISD System Self-Test Monitoring algorithms are designed to verify proper selection, setup and operation of the TLS console modules and sensors and will not complete and report passing test results in the event of a failure of components used in the system. Completed ISD monitoring tests are evidence that:

- The system was properly powered for data collection
- All necessary ISD sensors were setup and connected
- All necessary ISD sensors were operating within specification
- All internal components including TLS console modules were properly setup and operating within specification

Veeder-Root recommends printing a copy of the ISD ALARM STATUS and ISD DAILY report (REF. Section 5, Operation of the ISD Install, Setup & Operation Manual) periodically to determine that compliance tests are being completed in accordance with local and state regulations.

A step-by-step worksheet for recording data from the following operability tests is provided at the end of this Exhibit.

Note that districts may require use of an alternate form to meet these requirements, provided the alternate form includes the same minimum parameters.

Vapor Pressure Sensor Verification Test

Definitions common to all certification and test procedures are in:

D-200 Definition for Vapor Recovery Procedures

For the purpose of this procedure, the term “ARB” refers to the California Air Resources Board, and the term, “ARB Executive Officer” refers to the Executive Officer of the ARB or his or her authorized representative or designee.

1. Purpose and Applicability

1.1 The purpose of this test procedure is to determine if the Vapor Pressure Sensor (listed in Exhibit 1) is operating in accordance with the pressure sensor requirements of Exhibit 2. This procedure is used:

1.1.1 To determine the measured ullage pressure in underground gasoline storage tanks (UST) installed at gasoline dispensing facilities (GDFs) equipped with a Healy Phase II enhanced vapor recovery system with ISD and compare to the pressure reading of the Vapor Pressure Sensor at the TLS console.

1.1.2 To determine whether the Vapor Pressure Sensor complies with the performance specification when the sensor is exposed to ambient pressure.

1.2 This procedure is applicable for compliance testing.

2. Principle and Summary of Test Procedure

Determining UST Pressure - The pressure of the UST is determined at the Phase I vapor recovery adaptor (dry break assembly) with a vapor coupler test assembly as shown in Figures 2 and 3 of TP-201.3 (*Determination of 2 Inch WC Static Pressure Performance of Vapor Recovery Systems of Dispensing Facilities*) or a modified dust cap test assembly as shown in Figures 9-1 and 9-2 of this exhibit. The test assembly is equipped with a center probe, which opens the dry break, and a quick connect fitting that is connected to an electronic pressure measuring device or digital manometer. The test assembly should open the dry break with minimal venting of the UST. This test can be performed while product is being dispensed into motor vehicles.

Determining Ambient Pressure - The Vapor Pressure Sensor is subjected to ambient pressure by turning the Vapor Pressure Sensor valve, which is located in the dispenser closest to the tanks, to the Atmospheric Valve Position as shown in Figure 9-3. This test can be performed while product is being dispensed into motor vehicles.

3. Biases and Interferences

3.1 This test shall not be conducted within 30 minutes following gasoline transfer from a cargo tank.

4. Range and Accuracy

Electronic Pressure Measuring Device such as a digital manometer

Minimum readability shall be 0.01 inches WC with measurement range(s) to include at least up to positive and negative ten (±10) inches WC with a minimum accuracy of plus or minus 0.05 inches WC of full scale.

5. Equipment

5.1 The dust cap test assembly shall be modified in the following manner:

5.1.1. Install a probe in the center of the dust cap as shown in Figure 9-1 (one method is to tap and thread probe). The probe shall be of sufficient length to open approximately ½ inch of the dry break while allowing the cap to maintain a leak tight seal on the adaptor.

5.1.2. Install female quick connect fitting on the top of the dust cap, offset from the center probe as shown in Figure 9-1. A Swagelok, part number SS-QC4-B-4-PM, quick connect fitting or equivalent can be used.

5.1.3. Use “Tygon tubing” or equivalent to connect the manometer to the dust cap (Figure 9-2). Install a male quick connect fitting (Swagelok part number SS-QC4-5-400 or equivalent can be used) on one end of a ferrule stainless steel tube (or equivalent material). Connect one end of the “Tygon tubing” to the stainless steel tube and connect the other end to the digital manometer (Figure 9-2).

5.2 Alternatively, the vapor coupler test assembly, Figures 2 and 3 of TP-201.3 may be used in lieu of the dust cap test assembly.

5.3 Digital Manometer (Electronic Pressure Measuring Device)

Use a minimum range ±10.00 inches WC digital manometer to monitor the UST pressure with a minimum readability of 0.01 inches of WC. A Dwyer Series 475 Mark III Digital manometer or equivalent can be used. A copy of the manufacturer’s operating instructions shall be kept with the equipment.

6 Calibration Requirements

6.1 A copy of the most current calibration of the electronic pressure measuring device shall be kept with the equipment.

6.2 All electronic pressure measuring devices shall be bench tested for accuracy using a reference gauge, incline manometer or National Institute of Standards and Technology (NIST) traceable standard at least once every twelve (12) consecutive months. Accuracy checks shall be performed at a minimum of five (5) points (e.g., 10, 25, 50, 75 and 90 percent of full scale) each for both positive and negative pressure readings. Accuracy shall meet the requirements of Section 4.

<u>Determining UST Pressure</u>

7 Pre-Test Procedure

7.1 Turn on digital manometer and allow instrument to warm up for five minutes.

7.2 Zero out digital manometer using adjustment pod on top of instrument in accordance with manufacturer's instructions. Drift may be minimized by re-zeroing immediately after use by venting both pressure ports to atmosphere and adjusting the knob until the display reads exactly zero.

7.3 Attach the male quick connect fitting to the female quick connect fitting on the modified vapor dust cap.

7.4 Attach digital manometer to open end of Tygon tubing.

8 Test Procedure

8.1 Attach the dust cap or vapor coupler test assembly to the vapor adaptor (Figure 9-2).

8.2 On the TLS Console front panel, use the 'mode key' to scroll to "DIAG MODE" then use the function and step keys, as shown in Figure 9-4 to view the current pressure value.

8.3 Simultaneously record the ullage pressure from the digital manometer (connected to the vapor coupler test assembly) and the TLS Console. Record the above information on Form 1 "Data Form for Vapor Pressure Sensor UST Pressure Test." Districts may require the use of an alternate form, provided it includes the same minimum parameters as identified in the Data Form.

8.4 Verify that the pressure reading from the TLS Console is within ±0.2 inches WC from the digital manometer reading. If difference is not within

±0.2 inches WC, the pressure sensor is not in compliance with the pressure sensor requirements of Exhibit 2.

8.5 Press the <MODE> key to leave the 'CALIBRATE SMARTSENSOR' menu. **Note: Do not calibrate the sensor!**

Determining Ambient Pressure

9 Test Procedure for Testing Sensor Under Ambient Pressure

9.1 Access the Vapor Pressure Sensor, which is located in the dispenser closest to the tanks. Record which dispenser contains the pressure sensor and the pressure sensor serial number on the data form.

9.2 Remove the cap from the ambient reference port of the Vapor Pressure Sensor valve and open the valve to atmosphere by turning it 90 degrees so that the flow arrows point to both the Vapor Pressure Sensor sensing port and the ambient reference port (see Figure 9-3).

9.3 On the TLS Console front panel, use the 'mode key' to scroll to "DIAG MODE" then use the function and step keys, as shown in Figure 9-4 to view the current pressure value.

9.4 Verify that the pressure value is between +0.2 and -0.2 inches WC. If the pressure value is not within this range, the pressure sensor is not in compliance with the pressure sensor requirements of Exhibit 2.

9.5 Replace the cap on the ambient reference port of the Vapor Pressure Sensor valve. Restore the Vapor Pressure Sensor valve by turning it 90 degrees so that the flow arrows point to both the Vapor Pressure Sensor sensing port and the UST vapor space sensing line (ref. Figure 9-3).

9.6 Press the <MODE> key to leave the 'CALIBRATE SMARTSENSOR' menu. **Note: Do not calibrate the sensor!**

9.7 Record the above information on Form 2 "Data Form for Vapor Pressure Sensor Ambient Reference Test." Districts may require the use of an alternate form, provided it includes the same minimum parameters as identified in the Data Form.

10 Alternate Procedures

This procedure shall be conducted as specified. Any modifications to this test procedure shall not be used unless prior written approval has been obtained from the ARB Executive Officer, pursuant to Section 14 of CP-201.

Figure 9-1 - Typical Modified Vapor Adaptor Dust Cap (Bottom View)

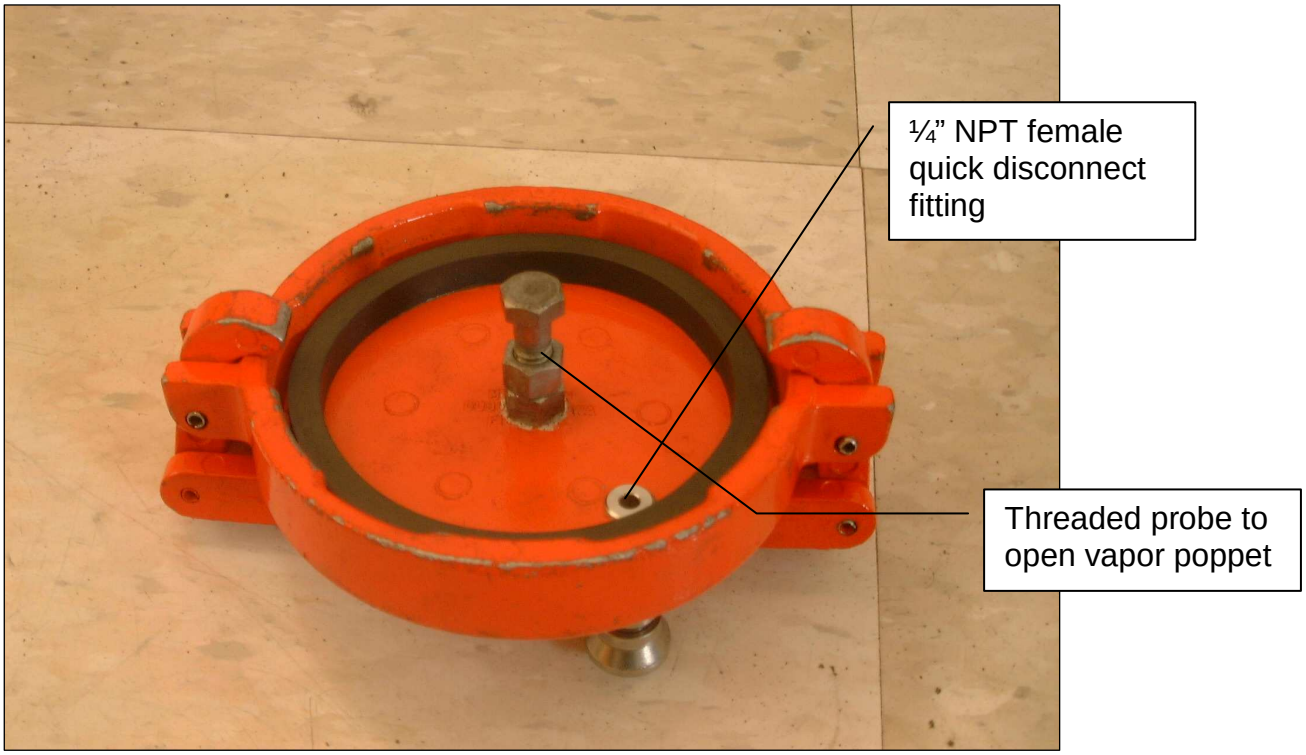

Figure 9-2 - Typical Field Installation of UST Pressure Measurement Assembly

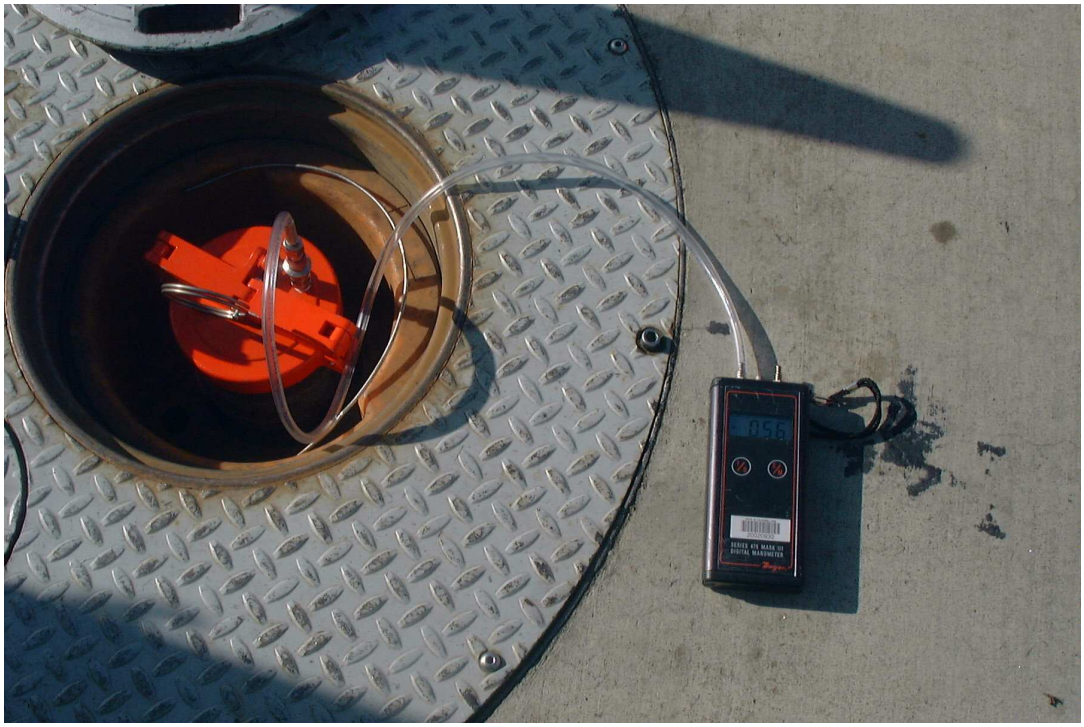

Figure 9-3
Vapor Pressure Sensor Valve Position

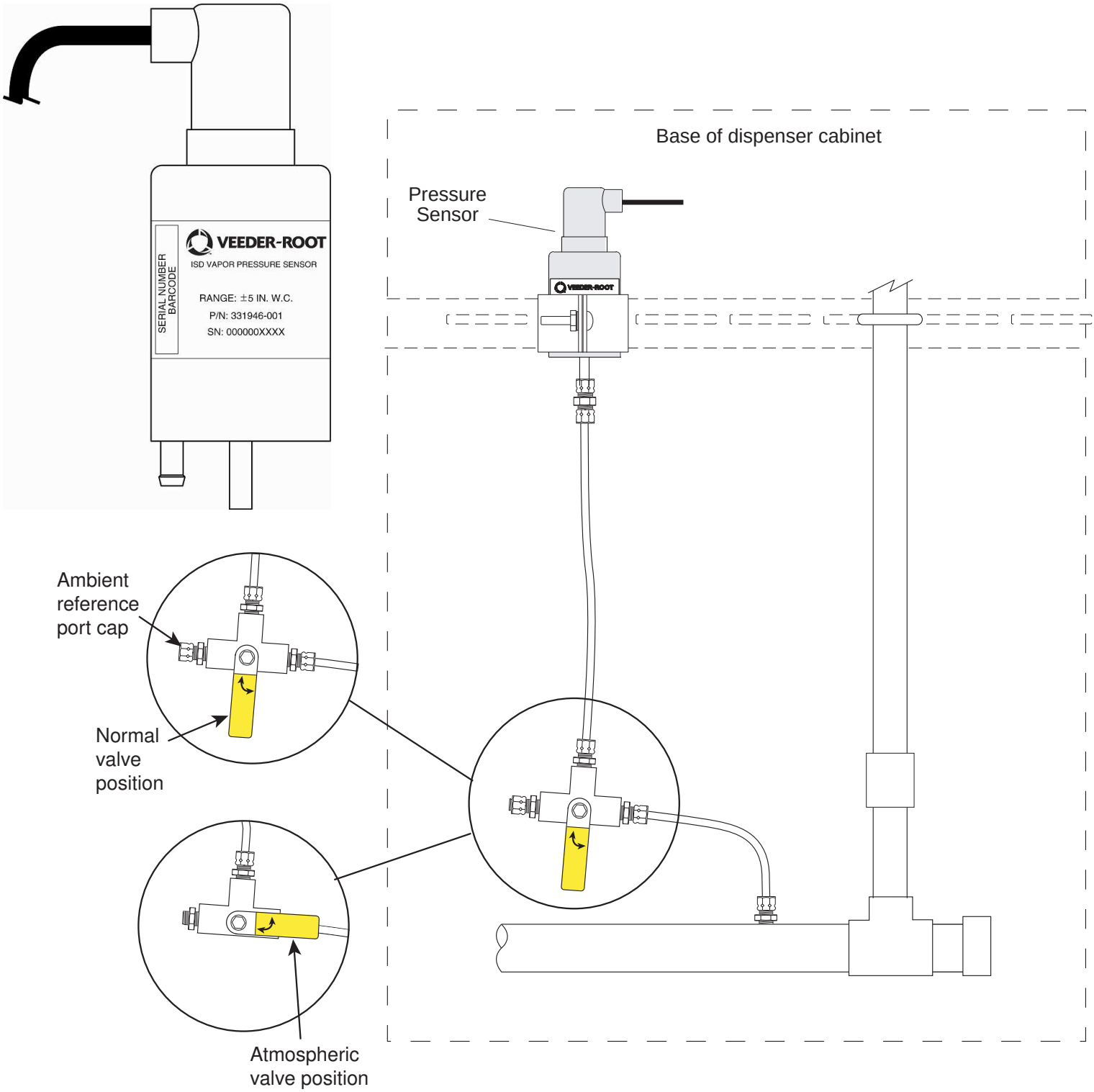

Figure 9-4
Accessing Calibrate SmartSensor Diagnostic Menu
for Vapor Pressure Sensor Reading

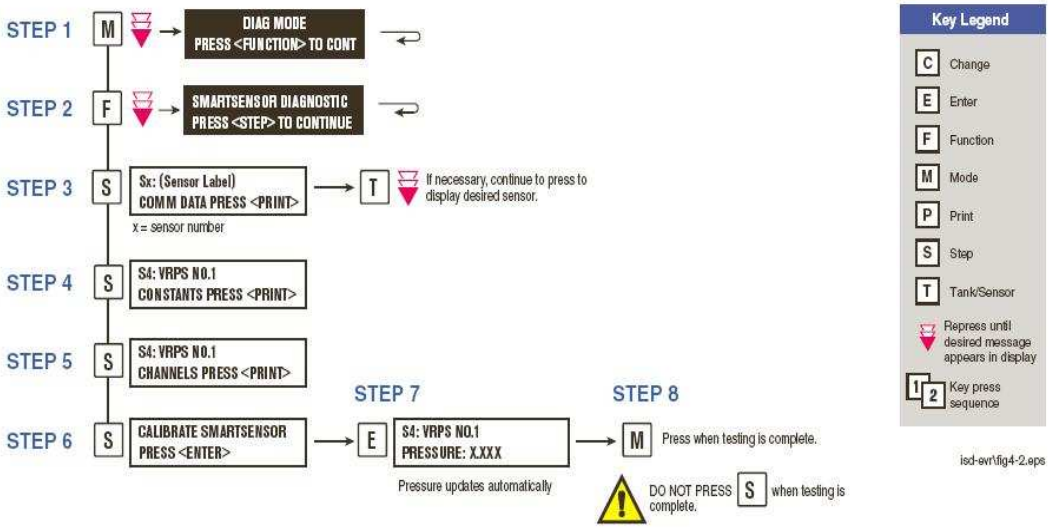

Form 1

Data Form for Vapor Pressure Sensor UST Pressure Test

DATE OF TEST _____

SERVICE COMPANY NAME	**SERVICE COMPANY'S TELEPHONE**
SERVICE TECHNICIAN	**VEEDER-ROOT TECH CERTIFICATION # (as applicable)** **ICC or DISTRICT TRAINING CERTIFICATION (as applicable)**
STATION NAME	**DISTRICT PERMIT #**
STATION ADDRESS **CITY**	**STATE** **ZIP**

PRESSURE SENSOR LOCATION: DISPENSER FUELING POINT (FP) NUMBERS	**FP #**_____	**PRESSURE SENSOR SERIAL NUMBER:** _____

STEP 8.3	**DIGITAL MANOMETER VALUE** _____ **inches WC**
STEP 8.3	**TLS CONSOLE SENSOR VALUE** _____ **inches WC** **(OBTAIN VALUE USING TLS CONSOLE KEYPAD SEQUENCE SHOWN IN FIG. 9-4, CALIBRATE SMARTSENSOR)**
STEP 8.4	**TLS Console Sensor Value within ±0.2 inches WC of Digital Manometer Value?** ☐ **Yes** ☐ **No** **IF NO: THE PRESSURE SENSOR IS NOT IN COMPLIANCE WITH THE PRESSURE SENSOR REQUIREMENTS OF EXHIBIT 2.**
STEP 8.5	**MODE KEY PRESSED TO EXIT THE CALIBRATE SMARTSENSOR MENU?** ☐

Form 2

Data Form for Vapor Pressure Sensor Ambient Reference Test

DATE OF TEST _____

SERVICE COMPANY NAME		SERVICE COMPANY'S TELEPHONE	
SERVICE TECHNICIAN		VEEDER-ROOT TECH CERTIFICATION # (as applicable) ICC or DISTRICT TRAINING CERTIFICATION (as applicable)	
STATION NAME		DISTRICT PERMIT #	
STATION ADDRESS	CITY	STATE	ZIP
STEP 9.1	PRESSURE SENSOR LOCATION: DISPENSER FUELING POINT (FP) NUMBERS FP # _____	PRESSURE SENSOR SERIAL NUMBER:_____	
STEP 9.2	REFERENCE PORT CAP REMOVED? ☐ VALVE SET TO AMBIENT REFERENCE PORT (PER FIG. 9-3)? ☐		
STEP 9.3	NON-CALIBRATED SENSOR VALUE _____Inches WC (OBTAIN VALUE USING TLS CONSOLE KEYPAD SEQUENCE SHOWN IN FIG. 9-4, CALIBRATE SMARTSENSOR)		
STEP 9.4	PRESSURE BETWEEN +0.20 & -0.20? Yes ☐ No ☐ IF NO: THE PRESSURE SENSOR IS NOT IN COMPLIANCE WITH THE PRESSURE SENSOR REQUIREMENTS OF EXHIBIT 2.		
STEP 9.5	REFERENCE PORT CAP REPLACED? ☐ VALVE SET TO NORMAL VALVE POSITION (PER FIG 9-3)? ☐		
STEP 9.6	MODE KEY PRESSED TO EXIT THE CALIBRATE SMARTSENSOR MENU? ☐		

Vapor Flow Meter Operability Test

1. Connect a notebook PC – See figure 5-9 of the ISD Install, Setup & Operation Manual. Run Veeder-Root's "ISD PC Setup Tool", v1.03 or higher, to the dedicated TLS serial port that is required for ISD reports access. Using the tool, access the individual fueling point "dispensing event ISD A/L" results as needed in this test procedure. These results are compared to the manually measured V/L's in the procedure. Training on use of the tool is provided as part of the Veeder-Root training program for ISD. A trained service technician must be present when performing this operation.

2. Select a dispenser and note the fueling point numbers on the data form. Obtain the vapor flow meter serial number (available from the EVR/ISD Setup Printout – see Figure 3-6 in the ISD Install, Setup & Operation Manual). Record the serial number on the data form.

3. Conduct a Healy EVR Phase II system V/L test per Exhibit 5 of VR-202-H with lowest grade fuel available on that dispenser to obtain a V/L result.

4. Obtain the corresponding ISD A/L value for that V/L test obtained from the TLS using the "ISD PC Setup Tool".

5. Compare the ISD A/L value for that dispenser hose to the V/L result (subtract V/L result from A/L value and note difference on the form).

   Pass: If the difference is between -0.15 and +0.15, then the ISD A/L value is within +/- 0.15 of the V/L result. Circle "Pass" to document that the ISD flow meter in that dispenser passes and repeat the procedure beginning at Step 2 for the next dispenser.

   Continue: If the ISD A/L value is NOT within +/- 0.15 of the V/L result, then go to Step 6.

6. Run two more V/L tests per Exhibit 5 with lowest grade fuel on the same hose and average the two results with the first V/L result from Step 3.

7. Obtain the corresponding two ISD A/L values from the TLS and average the two values with the first ISD A/L value from Step 4.

8. Compare the average of the 3 ISD values for that hose to the average of the 3 V/L results (subtract V/L average from A/L average and note difference on the form).

Pass: If the ISD A/L average is within +/- 0.15 of the average of the 3 V/L results, the ISD flow meter in that dispenser passes the operability test. Go to the next dispenser and repeat the procedure beginning at Step 2.

Continue: If the ISD A/L average is NOT within +/- 0.15 of the average of the 3 V/L test results, then go to Step 9.

9. If a second fueling position is available on the dispenser, repeat the tests beginning at Step 3 for the second fueling position. If the second fueling position tests do not pass Steps 3 through 8, then the flow meter is not in compliance with the requirements of Exhibit 2.

Site Shutdown Test

This test must be performed by a certified Veeder-Root contractor.

1. Remove power from TLS console.

2. Confirm power to submersible pumps is off by verifying that gasoline dispensing has been disabled.

3. Restore power to TLS console.

Veeder-Root In-Station Diagnostics (ISD)
Vapor Flow Meter Operability Test Procedure

DATE OF TEST _____

SERVICE COMPANY NAME	SERVICE COMPANY'S TELEPHONE
SERVICE TECHNICIAN	VEEDER-ROOT TECH CERTIFICATION #
STATION NAME	DISTRICT PERMIT #
STATION ADDRESS	CITY STATE ZIP

STEP 2.	VAPOR FLOW METER SERIAL NUMBER _____		
	DISPENSER FUELING POINT NUMBERS	FP _____	FP _____
STEP 3.	LOW GRADE FUEL HOSE *V/L RESULT #1 (ONE FP ONLY)		
STEP 4.	ISD A/L VALUE #1 CORRESPONDING TO RESULT IN STEP 3		
STEP 5.	STEP 4. VALUE MINUS STEP 3. VALUE	DIFF.	DIFF.
	PASS IF DIFFERENCE IS WITHIN +/-0.15, IF LARGER DIFFERENCE, THEN CONTINUE TO STEP 6 (CIRCLE ONE)	PASS CONTINUE TO STEP 6	PASS CONTINUE TO STEP 6
STEP 6.	LOW GRADE FUEL HOSE V/L RESULT #2		
	LOW GRADE FUEL HOSE V/L RESULT #3		
	AVERAGE OF 3 V/L RESULTS	AVG.	AVG.
STEP 7.	ISD A/L VALUE #2		
	ISD A/L VALUE #3		
	AVERAGE OF 3 A/L VALUES	AVG.	AVG.

Veeder-Root In-Station Diagnostics (ISD)
Vapor Flow Meter Operability Test Procedure

DATE OF TEST _____

STEP 8.	**STEP 7. AVG MINUS STEP 6. AVG.**	**DIFF.**		**DIFF.**
	PASS IF DIFFERENCE IS WITHIN +/-0.15, IF LARGER DIFFERENCE, THEN CONTINUE TO STEP 9.	**PASS**	**CONTINUE TO STEP 9**	
STEP 9.	**IF CONTINUE, REPEAT AT STEP 3. FOR 2ND FP USING 2ND FP COLUMN, ABOVE.**			

***Measure V/L using test procedure in Exhibit 5 of VR-202-G.**

Veeder-Root In-Station Diagnostics (ISD)
Site Shutdown Test

DATE OF TEST _____

SERVICE COMPANY NAME	SERVICE COMPANY'S TELEPHONE
SERVICE TECHNICIAN	VEEDER-ROOT TECH CERTIFICATION #
STATION NAME	DISTRICT PERMIT #
STATION ADDRESS CITY STATE ZIP	

STEP 1.	POWER REMOVED FROM TLS CONSOLE?	☐
STEP 2.	POWER TO SUBMERSIBLE PUMPS REMOVED BY TLS? (VERIFY GASOLINE FUELING DISABLED)	☐
STEP 3.	POWER RESTORED TO TLS CONSOLE?	☐

COMMENTS (INCLUDE DESCRIPTION OF REPAIRS MADE)

Executive Order VR-202-H
Healy Phase II EVR System
Including In-Station Diagnostic (ISD) System

Exhibit 10
INCON VRM Operability Test Procedure

The following procedures shall be used at field sites to determine the operability of the INCON VRM system to satisfy the requirements documented in VAPOR RECOVERY CERTIFICATION PROCEDURE, CP-201, CERTIFICATION PROCEDURE FOR VAPOR RECOVERY SYSTEMS AT GASOLINE DISPENSING FACILITIES. Testing the VRM equipment in accordance with this procedure will verify the equipment's operability for Vapor Containment Monitoring and Vapor Collection Monitoring.

The INCON Vapor Recovery Monitoring system uses Self Testing functions to verify the proper selection, setup, and operation of the console modules and sensors. Upon a detection of a failed module or sensor, the VRM system will follow the assessment period alarming sequencing for the particular device and will shutdown the dispenser(s).

- Vapor Flow Meter or Probe Module Failure will issue a Daily A/L Warning/Failure after day 1 and 2. A shutdown of the dispenser will follow day 2.
- A Vapor Pressure Sensor or 4-20mA Module failure will follow the Weekly Pressure Monitoring Warning/Failure after week 1 and 2. A shutdown of all the dispensers will follow week 2.
- A shutdown of the console, incorrect setup mapping of sensors, or failure of Console Modules not listed above will not complete test or report passing test results.

Franklin Fueling recommends printing a copy of the VRM DAILY report and viewing the VRM STATUS page on either the touch-screen display or web page periodically to determine that compliance tests are being completed in accordance with local and state regulations.

A step-by-step worksheet for recording data from the following operability tests is provided at the end of this Exhibit.

VRM Operability Testing

The Vapor Recovery Monitoring (VRM) Operability Testing procedures are intended to assist the installer with verifying all the vapor recovery equipment is functioning and operational.

Upon finishing an installation of an INCON VRM System, a certified technician will need to run the procedures listed in Section 2 below.

Note: The following procedures and checks are only related to the INCON VRM system; see the Executive Order for all inspections and test required for all certified equipment.

Procedures for after Installation or major Upgrade:

1. Active Alarm Check and Printout
2. Dispenser Shutdown Test
3. Vapor Flow Meter A/L Check
4. Vapor Pressure Sensor Ambient Test

Active Alarm Check and Printout

The purpose of checking the active alarm list is to see if there are any current alarms in the system. If there are then these issues may need to be corrected before running any operability tests.

To check the active alarm list, look to see if the alarm icon on the LCD of the Console is showing a Check Mark or Exclamation Point. If the Alarm icon is showing a Check Mark as shown below, then there are no active alarms. If there is an Exclamation Point Icon showing then press the icon to view the alarms. At this point a printout of the alarms can be done by pressing the Print Icon.

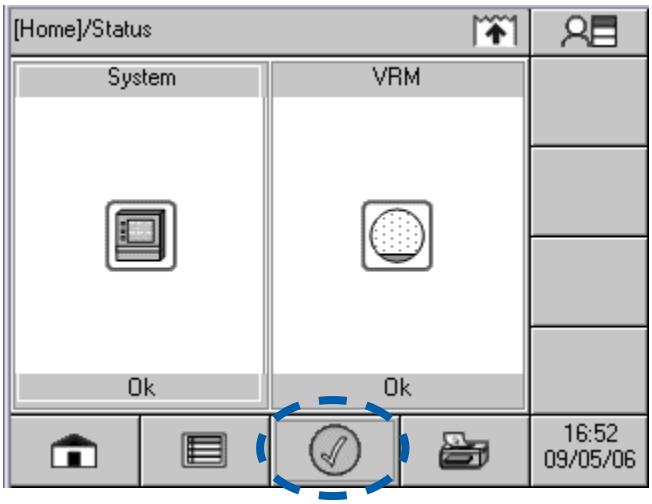

External ATG Connection Alarm Test (if not using internal inventory probes)
An External Automatic Tank Gauge (ATG) Connection Alarm Test will verify the proper setup to the External ATG. Use the following instructions to do the External ATG Connection Check.

Tools Needed

- No tools are required for this test

1. Disconnect the serial cable from either the External ATG or the INCON Vapor Recovery Monitoring system.
2. Verify the alarm "External ATG Connection" is generated within one minute. See Figure to the right. Also verify the Yellow LED is now Flashing.
3. Re-connect the serial cable.
4. Re-run the **Active Alarm Check and Printout** procedure. Note it may take up to one minute for the alarm to clear. Verify the Yellow LED goes OFF.

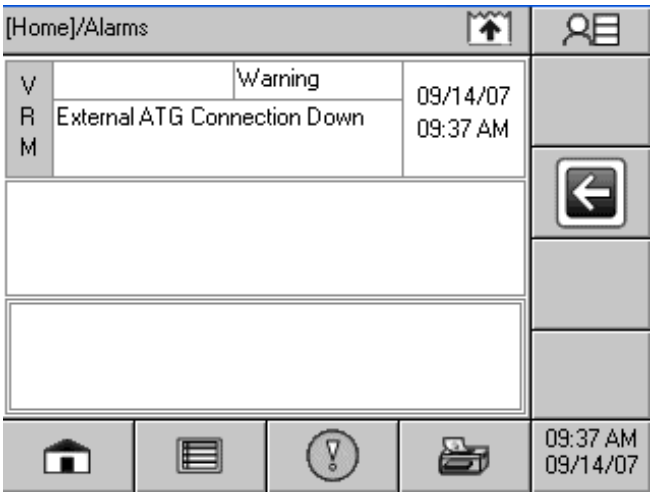

Dispenser Shutdown Mapping Verification

This is a procedure to test the shutdown feature of the INCON VRM System. The purpose is to verify the dispenser mapping for proper shutdown.

This procedure can be done from either the touch-screen or the web page.

Dispenser Shutdown Test via Touch Screen Display:

1. Navigate to the dispenser status page by the following steps (see Figure 1):
   a. Selecting the VRM Application icon
   b. Selecting the Sub-menu icon
   c. Selecting the Control icon
   d. You should see this screen

Figure 1 – Steps to Shutdown and Re-enable a Dispenser

Step A

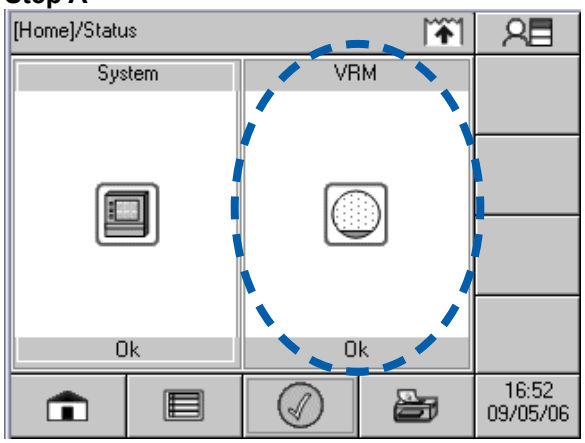

Step B

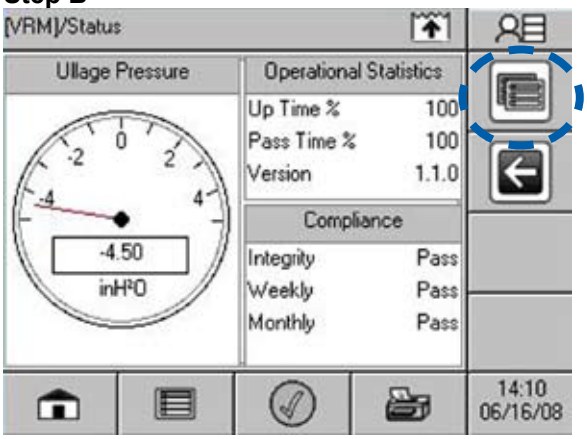

Step C

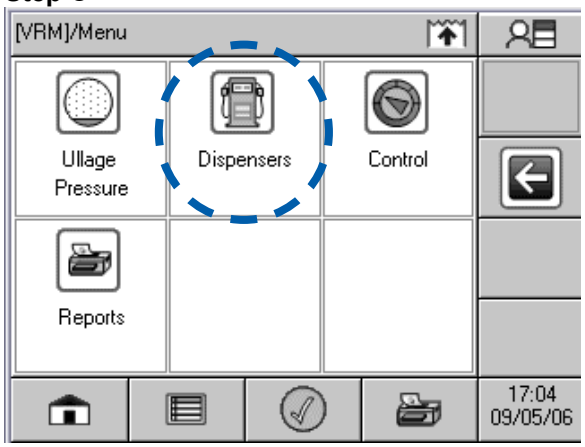

Step D

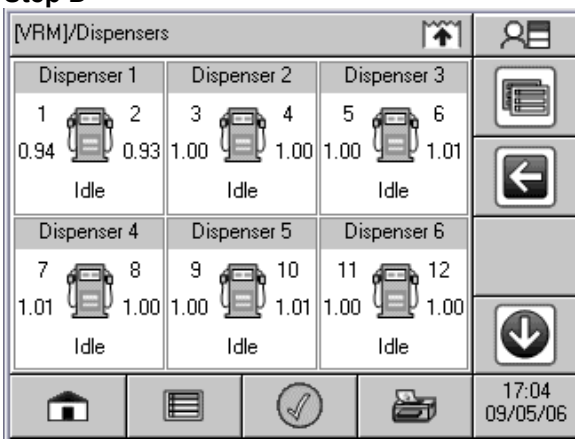

2. Once at the Dispenser Status page, if you touch one of the dispenser icons, a message will ask you if you want to disable that dispenser. If you press the OK button then the dispenser will shutdown.

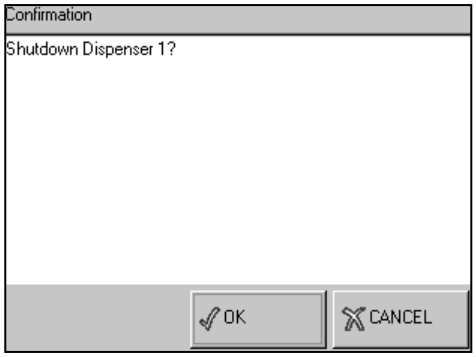

3. Verify the Dispenser under test is disabled and fuel cannot be pumped. From the Dispenser Status page, the dispenser under test should show “Shutdown”. See picture to right.

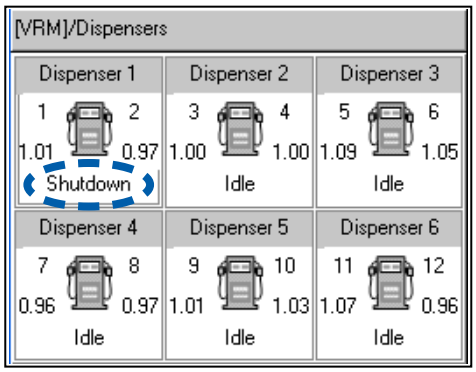

4. Once verified, if you press the same Dispenser again, a message will ask if you want enable Dispenser 1. Select “Yes” and the dispenser should come back to normal operation.

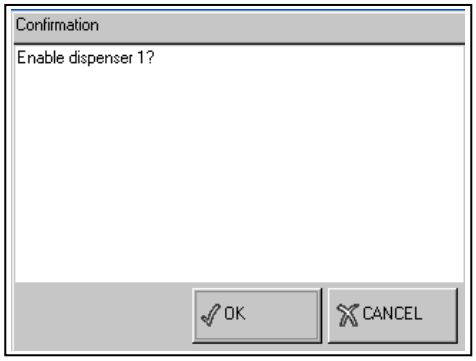

5. If the Dispenser under test did not shutdown or the wrong dispenser shutdown, then the wiring and setup should be checked and Steps 1 - 4 run again.

6. Repeat Steps 1 - 5 for all dispensers and record the results in the Test Form.

Dispenser Shutdown Test via Web Pages

The dispenser shutdown test can alternatively be run through the web pages. The following procedure can be done from either the LCD or the web page.
From the Web Page:

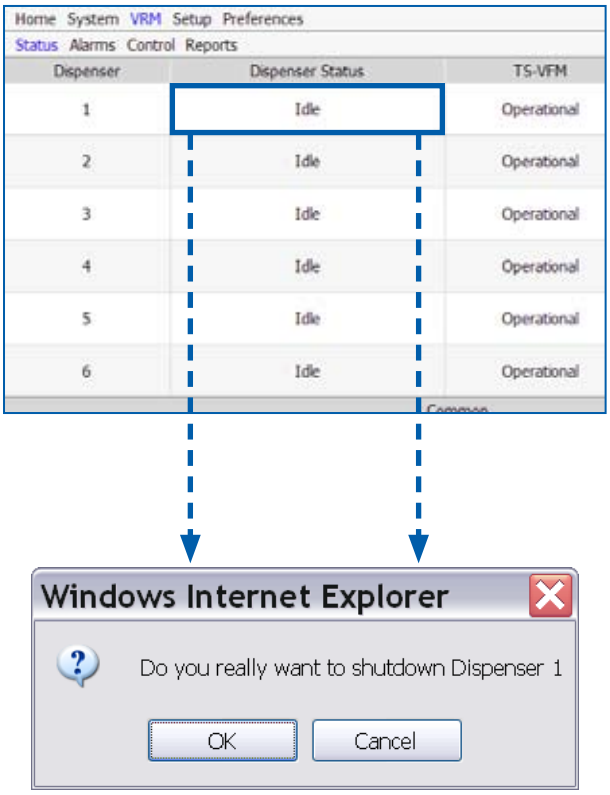

1. This procedure requires administrator privileges.
2. Navigate to the dispenser status page.
   http://Ip_address/vrm_status.html
3. In the **Dispenser Status** column, select the Dispenser under test. A message will appear asking if you want to disable the dispenser, click “OK”.
4. Verify the Dispenser under test is disabled and fuel cannot be pumped. From the Dispenser Status page, the dispenser under test should show “Shutdown”.
5. Once verified, if you press the same Dispenser again, a message will ask if you want enable Dispenser 1. Select “Yes” and the dispenser should come back to normal operation.
6. If the Dispenser under test did not shutdown or the wrong dispenser was shutdown, then the wiring and setup should be checked and Steps 1 - 4 run again.
7. Repeat Steps 1 - 5 for all dispensers and record the results in the Test Form.

Vapor Flow Meter V/L Check (Assist)

To verify the Vapor Flow Meters (VFM) is operating correctly, a technician will need to run the TP-201.5 as listed in the executive order.

Note 1: Only one fueling point is needed to verify each VFM.

Note 2: It is recommended the Healy Dispenser Vapor Line Integrity Test and a Pressure Decay Test per TP-201.3 must have passed prior to running this procedure.

Follow this procedure to validate the INCON VFM is within proper range of a reference measurement. Fill out the INCON VRM Operability Test Form as required. These procedures must be run for each VFM. When generating an V/L on a fueling point, be sure to stop dispensing from the opposite side of the dispenser. Other dispensers may be allowed to run normally.

1. Beginning at the first dispenser, run a V/L per Exhibit 5 of Executive Order VR-202-H.
   a. Record on the Test Form the V/L value from the reference test fixture.
   b. Record on the Test Form the V/L value from the INCON Console.
      This value is located on the Dispenser Status page, refer to Figure 1 to navigate to that screen. This status page will show the last V/L run for each fueling point. Note that the very next fueling transaction on the same fueling point will overwrite the screen V/L value.
   c. Subtract the V/L value from Steps a and b and record the difference on the Test Form.
2. Is the value from Step c less than -0.15 or greater than +0.15? If yes, then proceed to the next step. Otherwise, the test passes.
3. Following Exhibit 5, run an additional two V/Ls.
   d. Record on the Test Form the two V/L values from the reference test fixture.
   e. Calculate the average of the three V/L values from the reference fixture.
   f. Record on the Test Form the two V/L values from the INCON Console.
   g. Calculate the average of the three V/L values from the INCON Console.
   h. Subtract the average V/L value of Step B from Step C.
4. Is the value from Step h less than -0.15 or greater than +0.15? If yes, then refer to the VRM Troubleshooting and Diagnostics Guide for possible causes of bad readings. Otherwise, the test passes.

Vapor Pressure Sensor Offset Check (Ambient Check)

A Vapor Pressure Sensor (VPS) offset check will need to be done to verify the pressure sensor's zero offset. This procedure is to be done after installation. This procedure may be done as part of troubleshooting a failure conditions as directed in the INCON VRM Trouble-shooting and Diagnostics Manual. Use the following instructions to do the offset check.

Tools Needed:

- Adjustable Wrench

1. Turn the pressure sensor valve to the closed position. This isolates the pressure sensor from the ullage space.
2. Remove the calibration port plug with an adjustable wrench and leave the port open to atmosphere. Refer to Figure 2.
3. On the touch-screen display at the console or on the Web page, go to the *VRM»Status* page. See Figure 1, Step A. With the pressure sensor open to atmosphere check to see if the pressure is within ±0.10"wcg, if it is not then the VPS will need to be calibrated. If the pressure sensor needs to be calibrated then go on to the remaining steps.
4. On the LCD of the console, go to the VRM Control page, refer to Figure 3.
   a. Press the CONTROL icon. This allows access to the control menu screen.
   b. Press the CALIBRATE ZERO OFFSET icon. This will zero the pressure reading for atmospheric pressure.
   c. Press anywhere in the upper calibration box. Select "Yes" or "No" to calibrate the sensor.
5. Verify on the VRM Status page that the pressure reading is now showing 0.00"wcg ±0.10.
6. Replace the calibration port plug and turn the ball valve to the open position.

Figure 2 – Vapor Pressure Sensor Test Port

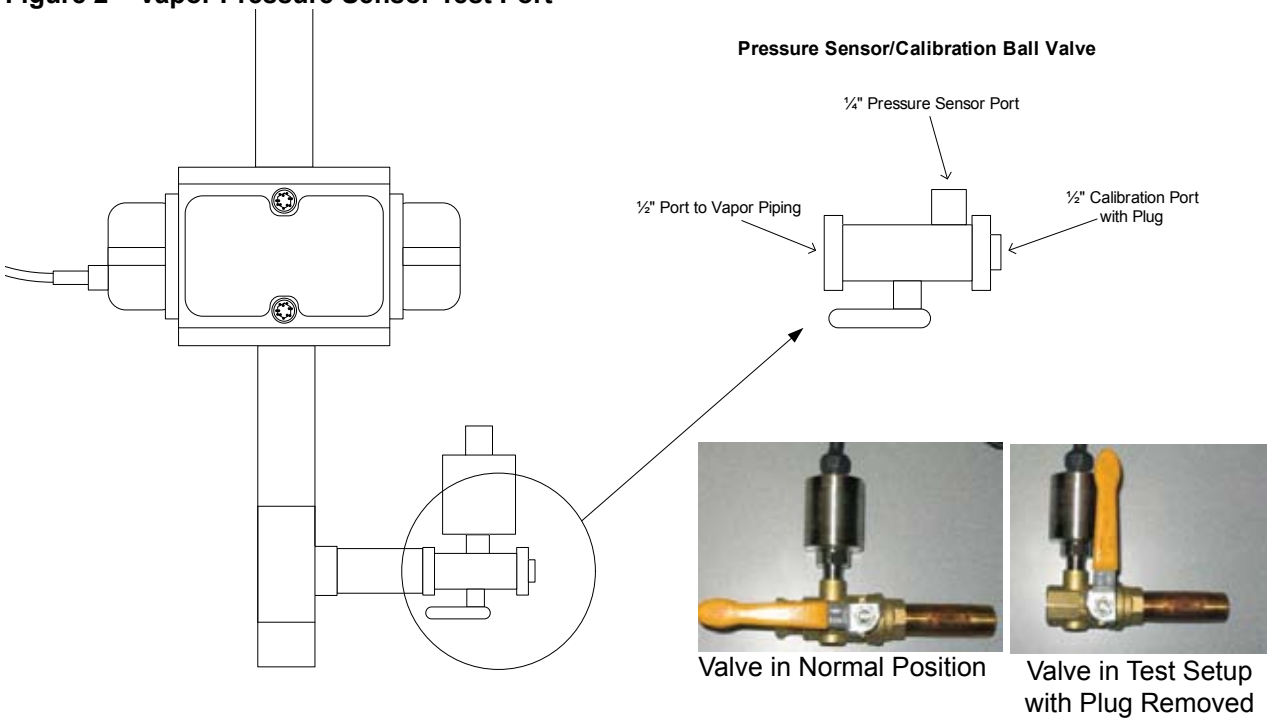

Figure 3 – Steps to Calibrate the Vapor Pressure Sensor

Step A

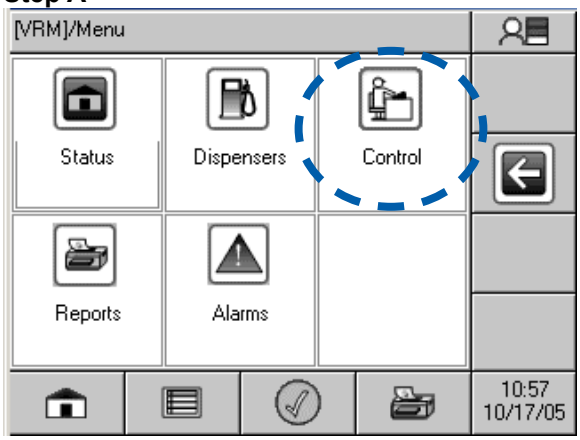

Step B

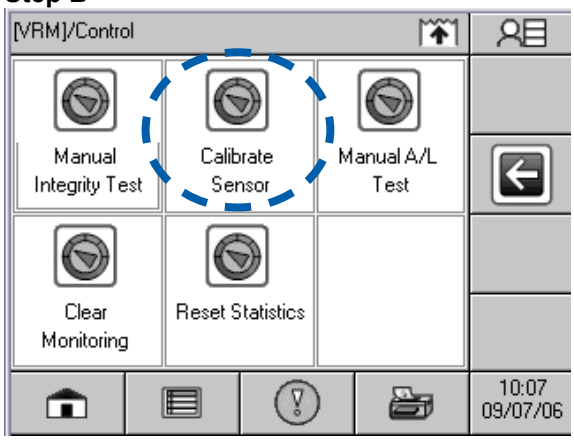

Step C

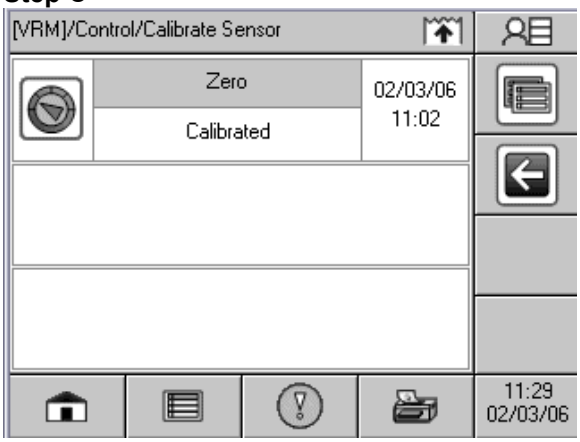

Calibrate Pressure Sensor Web Page View

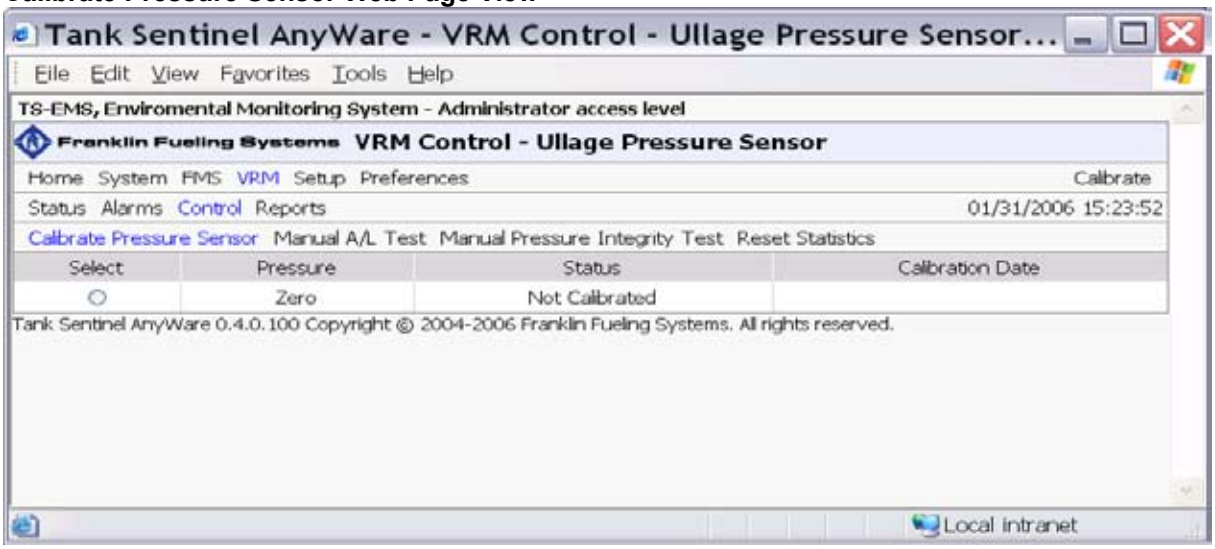

START-UP/NEW INSTALLATION FORM
INCON VAPOR RECOVERY MONITORING SYSTEM

DATE_____

BOTH SIDES OF THIS TEST FORM MUST BE COMPLETED FOR ALL NEW INSTALLATIONS

This form is not intended to be the Operability Test Procedure, rather its use is to provide the technician/installer with a form to record results. Follow the procedure as described in the Healy Phase II EVR System Including In-Station Diagnostics (ISD) System, Exhibit 10.

INCON VRM Startup Test Form – Side A

Service Company Name	Telephone Number
Service Technician	INCON Tech Cert #
Station Address	City
Dispenser Number	Vapor Pressure Sensor Serial #

Vapor Pressure Sensor Zero Offset Check		Check	Initials
A-1	Refer to the Vapor Pressure Sensor Offset Check procedures in this Exhibit.		
	1. Sensor test valve in closed position?		
	2. Calibration port plug was removed from test valve? Refer to Figure 2.		
	3. Record the pressure of the ullage containment area from the **VRM** > **Status** page. Vapor Containment Area Pressure: Is the Vapor Pressure within ±0.10? If YES, then proceed to Step 4, otherwise the sensor needs to be calibrated and proceed to Step 5.	_____ Yes/No	
	4. Calibration port plug is installed and the ball valve is open?		
	5. The pressure offset was cleared though the Control Menu. Refer to Figure 4.		
	6. Is the pressure now within ±0.10? If NO, then refer to the VRM Troubleshooting and Diagnostics Manual.	Yes/No	

External ATG Connection Check		Check	Initials
A-2	Refer to the External ATG Connection Alarm Test procedure in this Exhibit.		
	1. Serial Cable between External ATG and INCON Console was disconnected?		
	2. "External ATG Connection" alarm was generated? Yellow LED Flashing?		
	3. Serial Cable between External ATG and INCON Console was reconnected?.		
	4. "External ATG Connection" alarm has cleared? Yellow LED is OFF?		

START-UP/NEW INSTALLATION FORM
INCON VAPOR RECOVERY MONITORING SYSTEM

DATE_____

BOTH SIDES OF THIS TEST FORM MUST BE COMPLETED FOR ALL NEW INSTALLATIONS
EACH DISPENSER/VFM MUST HAVE A SEPARATE COPY OF THIS SIDE

INCON ISD Operability Test Form – Side B

Service Company Name	Telephone Number
Service Technician	INCON Tech Cert #
Station Address	City
Dispenser Number	Vapor Flow Meter Serial #

Dispenser Mapping Test		Check	Initials
B-1	Refer to the Dispenser Shutdown Mapping Verification section of the ISD Operability Test Procedure.		
	Dispenser was shutdown properly?		
	Fuel was unable to be dispensed from nozzles?		
	Dispenser was re-enabled from console?		
	Fuel is able to be dispensed from nozzles?		

Vapor Flow Meter A/L Check		Yes/No	Initials
B-2	Refer to the Vapor Flow Meter V/L Check section of this ISD Operability Test Procedure. **Note 1**: This procedure is only required to be done on one fueling point per dispenser. **Note 2**: The Healy Dispenser Vapor Line Integrity Test and a TP-201.3 must have passed prior to running this test procedure.		
	1. Record the V/L from the test fixture and from the INCON VRM System. a. V/L Value from Test Fixture: b. V/L Value from ISD VRM: c. Difference between Steps A and B:	 _____ _____ _____	
	2. Is the value of Step C greater than +0.15 or less than -0.15? If YES, then proceed to Step 3, otherwise the check passes.		
	3. Re-run the V/L test with the Air Inlet of the test fixture closed off. d. V/L Value # 2 from Reference: V/L Value # 3 from Reference: e. Average V/L from Reference: f. V/L Value # 2 from VRM Console: V/L Value # 3 from VRM Console: g. Average V/L from VRM Console: h. Difference between Steps E and G:	 _____ _____ _____ _____ _____ _____ _____	
	4. Is the value of Step H greater than +0.15 or less than -0.15? If YES, then refer to the VRM Troubleshooting and Diagnostics Guide for possible causes.		