Healy 900 Series Nozzle

1.0 Field Repair Instructions

NOTE: Only a Healy Certified Technician can service any problems discovered while conducting the Weekly or Quarterly Inspection and Testing. Provided that there are no other local district requirements, a GDF Owner / Operator can remove and install nozzles, curb hoses, breakaways, flow limiters and whip hoses without a manufacturer certification. Additional certifications may be required in accordance with local district requirements.

1.1 Healy Part No. 6395B Mini-Boot Replacement for 900 Series Nozzles

1.1.1 To remove the old Mini-Boot, unscrew the Mini-Boot Clamp (see Sections 1.7 & 1.8, Item 2) and remove.

1.1.2 Grip the Mini-Boot and rotate back and fourth a maximum of 5° degrees in each direction while gently pulling to separate the Mini-Boot from the nozzle.

Installing the new Mini-Boot

NOTE: *Heating the Mini-Boot in water softens the material, making it easier to install.*

1.1.3 Use a push rod checking tool (.050 hex wrench or 1/16” drill bit) to verify that a clear hole condition exists in the push rod hole of the spout body before proceeding.

1.1.4 Align the push rod extending from the nozzle end of the boot with the 1/16” hole in the spout body while also aligning the 3/16” hole in the mini-boot with the 3/16” pin on the spout body (See photos below).

1.1.5 Start the push rod into the 1/16” hole and slide the boot axially into engagement with the spout body and the boot location pin while limiting angular rotation of the boot to 5° degrees in each direction to avoid bending the push rod.

1.1.6 Install the mini-boot clamp and tighten securely. Verify that the “HEALY” logo on the Mini-Boot is aligned with the top center of the nozzle.

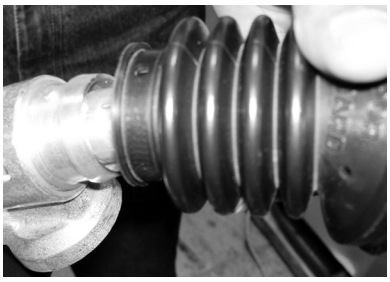

1.1.7 Verify that the nozzle will not dispense fuel when the dispenser is authorized (ready to dispense fuel) and the boot is in a free state by holding the nozzle into an approved container (do not compress the mini-boot in any manner) and actuate the nozzle. No fuel should dispense. If fuel does not dispense, proceed to step 1.1.8. Any nozzle that dispenses fuel with the mini-boot in a free state condition must be repaired or replaced.

1.1.8 Verify that the nozzle will dispense fuel when the dispenser is authorized and the nozzle spout is inserted into a vehicle fill-pipe to a position 1/8” short of locking the spout anchor ring over the rim of the fill-pipe opening or manually held back while dispensing into an approved container. Any nozzle that does not dispense fuel must be repaired or replaced.

1.2 Healy Part No. 8155 Spout Replacement

1.2.1 Remove the Mini-Boot using the procedure from Section 1.1.

1.2.2 Use a Phillips Screwdriver to remove the # 8 pan head Spout Screw & O-ring, (see Sections 1.7 & 1.8, Item 14) holding the spout in place.

1.2.3 With the screw removed, using a maximum twisting motion of 15° degrees in each direction, separate the nozzle body and the spout. Be sure that the 3 O-rings from the discarded spout assembly do not remain in the nozzle body. There is a 4th O-ring, furthest from the opening that remains inside the nozzle. Leave this O-ring in place.

Installing the New Spout Assembly

1.2.4 Install the new (pre-lubed) O-rings that are provided with the Healy Part No. 8155 Replacement Spout on the new spout assembly.

1.2.5 Carefully insert the spout into the nozzle, lightly pushing together until the spout aligns itself and resistance is felt. Using a maximum twisting motion of 15° degrees and light pressure, slide the pieces together, seating the o-rings and aligning the screw threads in the spout housing with the hole in the nozzle casting.

1.2.6 Install the new # 8 Panhead Spout Screw & O-Ring, (provided with the Healy Part No. 8155 Replacement Spout), and tighten securely to 12 inch pounds.

1.2.7 Install the Mini-Boot and test nozzle operation using the procedure from Sections 1.1.3 through 1.1.8.

Testing the New Spout:

All spout replacements must be tested to ensure the installation has been completed correctly.

1.2.8 Dispense product into a container deep enough to cover the small hole near the tip of the spout and verify that the dispensing rate is between 6.0 – 10.0 gpm with the nozzle lever held in the full open (handheld) position. While dispensing, with the nozzle lever held in the full open (handheld) position, immerse the spout until the hole is covered. If shutoff does not occur, turn off the dispenser, remove the spout, and check the o-rings. Replace the o-rings as necessary (Part No. 6206-OR Spout O-Ring Kit) and repeat Sections 1.2.7 through 1.2.8. If shutoff does occur, go to Section 1.2.9.

Note: If repeated attempts to repair nozzle does not result in successful shut off, replace the nozzle.

1.2.9 Repeat Section 1.2.8 two additional times (3 tests total) to ensure that the auto shutoff feature is working properly. There should be no hesitation to the shutoff; it should be quick and positive. If shutoff tests are successful, the nozzle can be put back into service. If either additional shutoff test fails, turn off the dispenser, remove the spout, and check the o-rings. Replace the o-rings as necessary (Part No. 6206-OR Spout O-Ring Kit) and repeat Sections 1.2.7 through 1.2.9.

Note: If repeated attempts to repair nozzle does not result in successful shut off, replace the nozzle.

1.3 **Healy Scuffguard Replacement** (Part No. depends upon scuffguard color - contact Healy distributor for correct part no.)

1.3.1 Remove the Mini-Boot using the procedure from Section 1.1.

1.3.2 Slide a long screwdriver under the Scuffguard (see Sections 1.7 & 1.8, Item 5) in the area of the main valve cap nut on the top of the nozzle.

1.3.3 Pry upward to clear the top of the main valve cap, and then pull steadily toward the spout to remove.

1.3.4 Installation is the reverse of this method. It works best with the butt of the nozzle held in a vise. In cold weather the Scuffguard may not be pliable enough to use the above method, carefully (do not damage the nozzle) cut the old Scuffguard off with a knife and replace it with a new “warmed” Scuffguard by using the reverse of the step above.

1.3.5 Install the Mini-Boot and test nozzle operation using the procedure from Sections 1.1.3 through 1.1.8.

1.4 Healy Part No. 469 Handle Cover Replacement

1.4.1 Grasp the lower edges of the Handle Cover (see Sections 1.7 & 1.8, Item 6) and pull the cover off with an upward motion.

1.4.2 Installation is the reverse of this procedure. Be sure the pointed wings on the front of the cover are slid under the Scuffguard.

1.5 Healy Part No. 6358 Handguard Replacement

1.5.1 This is best done with the nozzle detached from the hose. The front and rear guard pins must be removed. Back up the head side of the pin with a suitable socket and drive out the guard pins using a 3/32” drive pin punch or equivalent. The spring-loaded hold-open clip will pop out when the rear pin is removed. Be sure to observe the orientation of the spring so it can be properly reinstalled.

1.5.2 Remove the Handguard (see Sections 1.7 & 1.8, Item 10) carefully. The lever will drop down and the lever pivot pin will be free and could possibly slide out. Place the new Handguard into position and install a new front guard pin (Figure 1, Item 13) through the Handguard. *Do not peen at this time*.

1.5.3 Position the hold-open clip (see Sections 1.7 & 1.8, Item 7) over the handguard. Insert a new rear guard pin (see Sections 1.7 & 1.8, Item 8) through one ear of the clip, handguard and approximately 1/8” through the casting. Slide the coil spring (see Sections 1.7 & 1.8, Item 9) into position with the “hook” on the hold-open clip. Push in the spring so the pin passes through the coil and into the other ears on the casting, handguard and clip. Be sure the hold-open clip is installed properly before peening-over the free ends of the two pins.

1.6 Healy Part No. 6130-4 Lever Replacement

1.6.1 Remove the Handguard using the instructions in Section 1.5 to expose the Lever. There is a washer around the plunger under the Lever. Observe how these are installed and be sure to re-use them with the new Lever.

1.6.2 With the Lever released, the white plunger will pull back towards the casting and make it difficult to re-install the pin on a new Lever. Use a small screwdriver to reach through one mounting hole in the new Lever and engage the hole in the plunger. Push the blade through the plunger, align the two holes, insert the pin, and remove the screwdriver to retain the Lever.

1.6.3 Replace the Handguard using the instructions in Section 1.5.

1.7 900 Series Nozzle Illustration

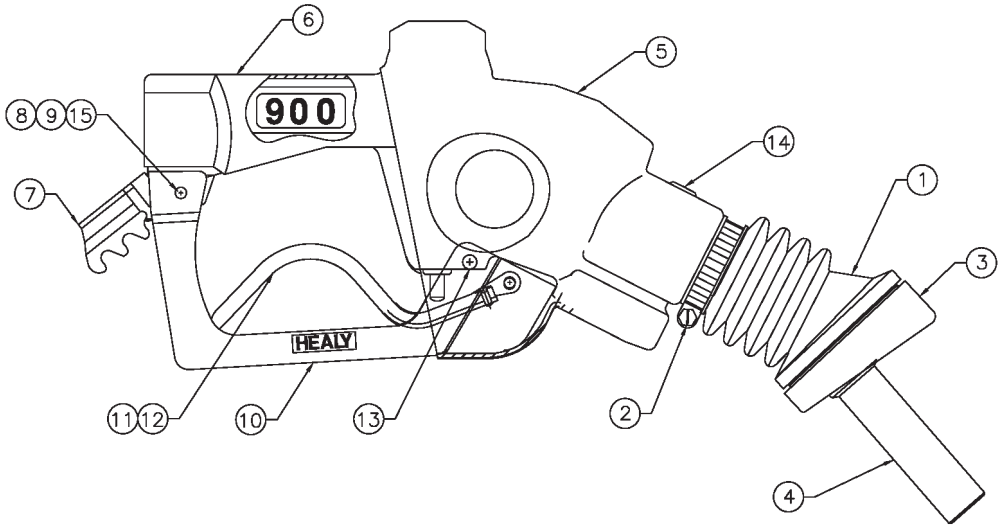

1.8 Field Replaceable Parts – 900 Series Nozzle

Illustration Reference	Part Description	Healy Part Number
1	900 Mini-Boot Assembly	6395B
2	Mini-Boot Clamp	640956
3	Face Seal Assembly with Wire	279A
4	Spout Assembly	8155
5	Scuffguard, Assorted Colors	Contact Healy Distributor
6	Handle Cover	469
7 *	Hold Open Clip	6238 (3 position) or 6238-2 (2 position)
8	Rear Guard Pin	239-L
9 *	Spring	6249
10	Handguard	6358
11	Lever Cover	235-C
12 *	Lever Assembly	6130-4
13 *	Front Guard Rivet	219
14	Spout Screw & O-ring	6102A
15	Pal Nut	240SS
* Order Healy Part No. Z057 or Z058 Hold-Open Clip Kit (Includes Healy Part Numbers: 6238 (Z057) or 6238-2 (Z058) Hold-Open Clip, 239-L Rear Guard Pin, 6249 Spring, 6130-4 Lever Assembly, 240SS Pal Nut, 219 Front Guard Rivet)		

1.9 Healy Part No. 8034-1 V/L Test Sleeve for use with Healy 900 Nozzles

1.9.1 Overview

The 8034-1 Vapor / Liquid Test Sleeve (See Figure 1) is used to determine the Vapor to Liquid Volume Ratio on Healy Systems Model 900 Series Vapor Assist Nozzle. This Test Sleeve is required to perform a V/L ratio test with Exhibit 5 of either Executive Order VR-201-M or VR-202-M. A V/L ratio of between 0.95 and 1.15 is required (at a flow rate of between 6.0 - 10.0 gallons per minute).

The only serviceable part in the 8034-1 Test Sleeve is the Spout Seal O-Ring (Healy Part No. 63034). Inspect the Spout Seal O-ring before performing a test. Any cuts or tears will allow air to be ingested and give an inaccurate reading.

Note: Motor oil (any weight) is acceptable for lubricating the O-Ring. Contact Healy Technical Services with any questions about other lubricants that may be used in conducting this test.

1.9.2 Test Procedure

Note: Conduct all pre-tests and testing in accordance with Exhibit 5 of either Executive Order VR-201-M or VR-202-M.

1.9.2.1 Slide the V/L Adaptor over the spout tip and compress the boot until the spout anchor ring contacts stop in the V/L Adaptor.

1.9.2.2 Hold the V/L Adaptor in contact with the spout anchor ring and hand tighten thumbscrew to secure adaptor. The thumbscrew and Healy logo on top of the nozzle boot face seal must be in vertical alignment to imitate fueling an unleaded vehicle.

1.9.2.3 Insert pins to seal the two bleed holes in the boot (directly behind face seal assembly).

1.9.2.4 Hold magnet assembly against vinyl scuffguard directly below ORVR sensor housing and secure in place with the Velcro strap as shown on Figure 1. A vacuum level of 0.1” wc may activate the ORVR sensor, causing a substantial decrease (error) in the V/L ratio. The magnet locks out the ORVR sensor to avoid false results in V/L testing of the 900 Nozzle.

1.9.2.5 Check the strength of the magnet prior to fastening it to the nozzle. The magnet should be capable of holding about two pounds of weight. Note: A typical gas cylinder safety cap weighs about 2 lbs.

1.9.2.6 Proceed with V/L test. If the grade point tested is not within the limit of the Executive Order, use the procedure outlined in Section 1.10, How to Adjust the V/L (Vapor over Liquid) Ratio on the Healy 900 Model Nozzle, to adjust the V/L.

Note: If more than one nozzle share vacuum plumbing with the nozzle being tested, one troubleshooting method for a low V/L ratio is to seal all nozzles other than the nozzle being tested, using plastic bags and tape or rubber bands. If leaks in the nozzles/check valves served by a common vacuum pump cause the bags to deflate, the low V/L ratio may have been caused by a leak through an idle nozzle during the test. The V/L test to verify compliance, however, shall be conducted without “bagging” any of the nozzles.

1.9.2.7 Remove the seal pins and magnet assembly; loosen thumbscrew and remove V/L adaptor from nozzle.

Figure 1

Healy Systems V/L Test Sleeve
Part No. 8034-1

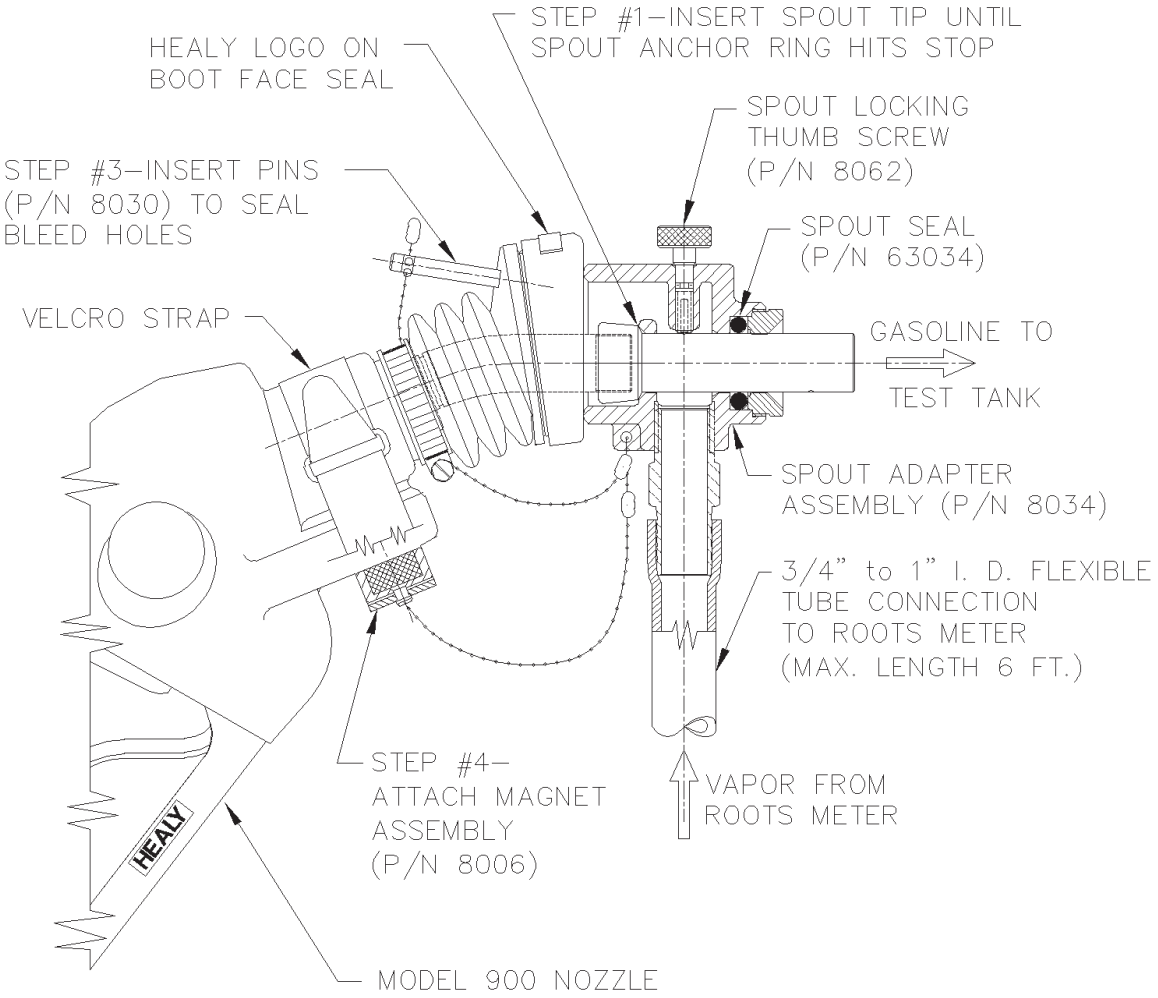

1.10 How to Adjust the V/L (Vapor over Liquid) Ratio on the Healy 900 Series Nozzle

1.10.1 Remove, or pull forward, the Scuffguard from the nozzle body.

1.10.2 With Spout of the Nozzle facing to your left, locate the Vapor Flow Control Valve on the side of the Nozzle Body. *Do not remove cover assembly*.

1.10.3 Locate the opening in the center on the cover of the Vapor Flow Control Valve. Insert a .050 hex-key into the center opening of the Vapor Valve Cover Assembly.

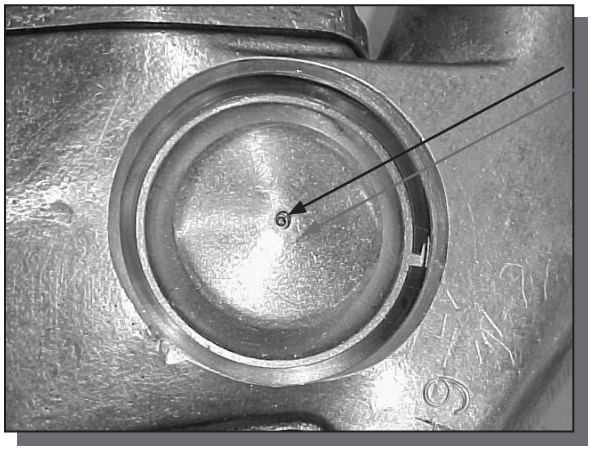

1.10.4 After making any adjustments as show below, the nozzle has to be retested as specified in Exhibit 5, Section 7, of either Executive Order VR-201-M or VR-202-M, for V/L (Vapor over Liquid) readings.

1.10.4.1 Adjust clockwise to increase V/L reading.
1.10.4.2 Adjust counter-clockwise to decrease V/L reading.
1.10.4.3 Repeat Section 1.10.4 until the nozzle V/L is between 0.95 and 1.15.