Console DTU (Data Transfer Unit)

Installation Instructions

Overview

The TS-DTU will be installed in the dispenser when it is used as a Remote DTU or inside the building when used as a Console DTU. These installation instructions are to be used for installing the TS-DTU inside the building.

When used as a Console DTU, data is received from the Remote DTU units via power line communication. The data is then sent to the System Console (TS-550/5000/EMS) for processing. Unlike the Remote DTU units, the Console DTU will have no Intrinsically safe sensors connected to it.

Site Inspection

A licensed electrician should perform a site inspection before installing any equipment. The Console DTU must be connected to all electrical phases that supply power to dispensers containing Remote DTUs.

Check for any electrical isolation. Isolation between the electrical panel and the dispenser can result in poor or no communication with the DTU. Make sure there is not a power conditioner between the Console DTU and dispenser power.

Installation Procedure

Tools and Supplies Needed

• 1/2 " Cord grip/strain relief	• Small slotted screwdriver
• Multimeter	• Mounting screws
• 2-wire shielded cable	• 14 AWG wire (one for each phase and ground)

Step 1 – Remove System Power

Remove power from the TS-5XXX Series System Console and do NOT return power to the System Console or to the Console DTU until instructed to do so.

Electrical Hazard! Always disconnect power supplies before installing or servicing the console TS-DTU. Use proper lock-out and tag-out procedures to ensure no power is accidentally applied to the system. Failure to do so could result in severe injury or death.

Step 2 – Mounting the Console DTU

Mount the Console DTU as close to the circuit breaker panel that is suppling the dispenser(s). Remove the cover and insert a screw (not supplied) into each of the four corners of the enclosure. Mount the unit to the wall. You may optionally use the supplied mounting brackets.

Step 3 – Power Connection

The Console DTU may use the same circuit breaker as the System Console but **DO NOT** connect the power for the Console DTU inside the Console enclosure. Install a junction box or wire the Console directly to the circuit breaker panel.

Ideally, the circuit selected for the console power will be on the same phase as all dispensers and no further power connections will be required. If any dispensers are on a different phase, run wires from the L2 and L3 connections on the Console DTU to the appropriate circuit breakers for the required extra phases. If there is any question about what phase some of the dispensers are on, it is recommended to connect all three phases to the Console DTU.

Connect the neutral for the Console DTU to the same neutral supplying the dispensers. If there is not a clean neutral return for the DTU then poor quality may result.

Warning: Cycling power to the Console DTU without powering off the System Console will cause the System Console to reboot.

Installer must use conduit for connecting the DTU on the power connection side.

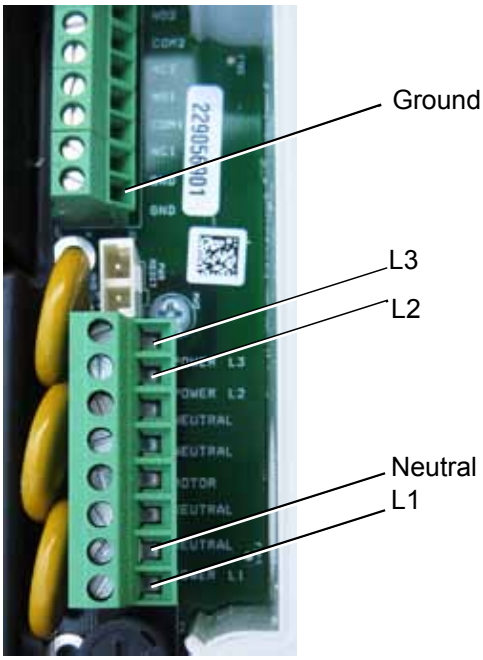

Figure 1: Power Connections to the Console DTU

Step 4 – Bus Termination Jumper Removal
The Console DTU will provide system bus termination when installed and running. Therefore the system bus termination currently provided by the Power Supply Module needs to be removed. Refer to the TS-5XXX Series Installation Guide for instructions on how to remove a module.

Be extremely careful when removing the power supply module so it does not rub against any other part of the system. After it is removed from the system, locate the system bus termination jumper JP1 and remove it (Figure 2).

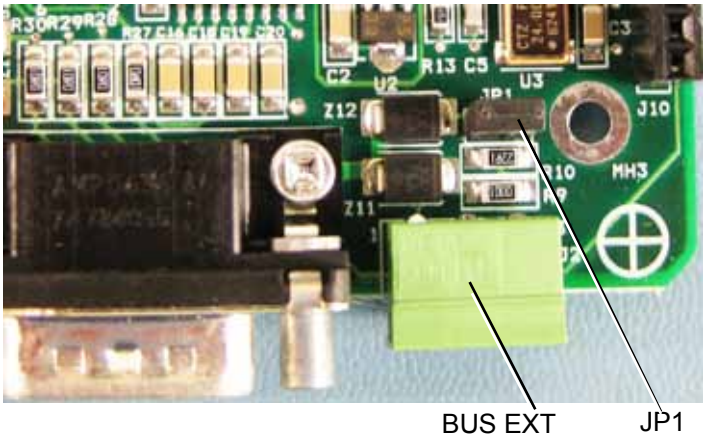

Figure 2: JP1 Location on the Power Supply Module

Re-Install the power supply module, securing it properly in place and replace the communication bracket as required.

Step 5 – Data Connection
The Console DTU acts as an external System Console module and therefore must be connected to the system bus. This is made possible via the external BUS EXT connection, located on the power supply module.

The bus connection requires 2-wire shielded cable and FFS recommends Belden 87761. On the Console DTU, the cable enters through the Intrinsically Safe (I.S.) opening but is connected outside of the I.S. area, which is not used in the Console DTU. Therefore the I.S. shield will need to be removed and discarded. Secure the bus cable on the Console DTU side using a cord grip.

On the System Console communications bracket, locate the BUS EXT connector (Figure 4). The connector is removable for convenient wiring. Refer to the following table and make the proper BUS (HIGH, LOW, GND) connections (Figure 3). To make the necessary connections between the System Console and the DTU, plug the BUS EXT connector back into the System Console. Secure the bus cable so it is not accidentally disconnected.

Belden Cable	BUS EXT	Console DTU Connection
Red Wire	HIGH	HIGH
Black Wire	LOW	LOW
Shield	GND	GND

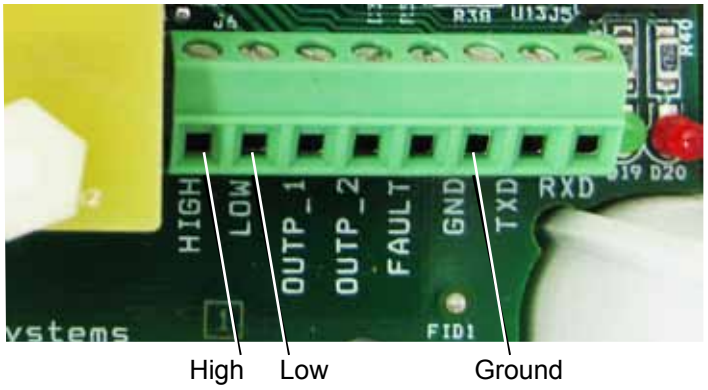

Figure 3: Console DTU BUS EXT Connection

Figure 4: Console Side BUS EXT Connection

Step 6 – Review All Connections
Review power and data connections and make sure the cable is attached securely. Finally replace the Console DTU Cover.

Step 7 – Power Up
Return power to the System Console and the newly installed Console DTU.

Related Documents

000-2146	DTU Dispenser Retrofit Manual
000-2142	T5 Console Programming Manual, rev D or higher
000-2150	T5 Installation Manual
000-2058	VRM IOM manual rev C or higher

NOTES:

1.) THE MODEL TS-DTU/P SHALL NOT BE CONNECTED TO ANY EQUIPMENT WHICH USES OR GENERATES GREATER THAN 250V.

2.) EACH GROUND TERMINAL SHALL BE CONNECTED TO A SUITABLE SYSTEM EARTH GROUND. THE DC RESISTANCE BETWEEN GROUND TERMINALS AND EARTH GROUND SHALL BE LESS THAN 1 OHM.

3.) THE MODEL TS-DTU/P WIRING SHALL BE INSTALLED IN ACCORDANCE WITH THE APPLICABLE NATIONAL OR LOCAL CODES. CONDUCTORS OF DIFFERENT INTRINSICALLY SAFE CIRCUITS RUN IN THE SAME CABLE/CONDUIT MUST HAVE AT LEAST 0.25mm OF INSULATION.

4.) CAPACITANCE AND INDUCTANCE OF THE FIELD WIRING FROM THE INTRINSICALLY SAFE EQUIPMENT TO THE BARRIER SHOULD BE CALCULATED AND SHOULD BE INCLUDED IN THE SYSTEM CALCULATIONS AS SHOWN IN TABLE 1, 1A. CABLE CAPACITANCE (Cc) PLUS INTRINSICALLY SAFE EQUIPMENT CAPACITANCE (Ci) MUST BE LESS THEN THE MARKED CAPACITANCE (Co) SHOWN ON ANY BARRIER USED. THE SAME APPLIES FOR INDUCTANCE (Li AND Lo, RESPECTIVELY) WHERE THE CABLE CAPACITANCE AND INDUCTANCE PER FOOT ARE NOT KNOWN, THE FOLLOWING VALUES SHALL BE USED: Cc=60pF/ft., (200pF/M) Lc=0.2uH/ft (0.7uH/M).

5.) WIRING, CABLING AND SEALS MUST BE INSTALLED IN ACCORDANCE WITH THE NEC, CEC OR OTHER APPLICABLE NATIONAL OR LOCAL CODES.

6.) USE ONLY CABLE THAT IS SPECIFIED IN USER INSTALLATION MANUAL OR LISTED EQUIVALENT FOR THE INSTALLATION OF LIQUID LEVEL PROBES.

7.) USE THE FOLLOWING WIRE TYPES:
FOR I.S. WIRING USE 18AWG MINIMUM OIL AND GASOLINE RESISTANT TYPES, TFFN, THWN, THHN.
FOR POWER AND GROUND WIRING
POWER L1 AND NEUTRAL - USE 14 AWG OR LARGER.
POWER L2 AND L3 - USE 16 AWG OR LARGER.
SAFETY GROUND - USE 12 AWG OR LARGER.
FOR T5-5XXX WIRING SEE NEC ARTICLE 725 FOR CABLE TYPES OR USE AWM STYLE 2464 OR 2576.

8.) ONLY USE CRIMP TYPE CONNECTORS FOR ELECTRICAL CONNECTIONS (DO NOT USE WIRE NUTS OR OTHER TYPE CONNECTORS).

9.) SEAL ALL FIELD WIRING CONNECTIONS FROM MOISTURE WITH EPOXY SEAL - PACKS.

10.) SEE INSTALLATION MANUAL FOR MORE DETAIL.

11.) THE GENERAL CONTRACTOR MUST SUPPLY THE SPECIFIED WIRE, CONDUITS AND ALL ELECTRICAL ACCESSORIES.

12.) THE ENTITY CONCEPT ALLOWS THE USER TO IDENTIFY ACCEPTABLE COMBINATIONS OF INTRINSICALLY SAFE APPARATUS AND ASSOCIATED APPARATUS THAT HAVE NOT BEEN EXAMINED AS A SYSTEM. EACH APPARATUS IS EXAMINED SEPARATELY BY A NATIONALLY RECOGNIZED TEST LABORATORY (NRTL) OR NOTIFIED BODY AND ASSIGNED A SET OF PARAMETERS CALLED ENTITY PARAMETERS. THE ENTITY PARAMETERS TS-DTU/P (ASSOCIATED APPARATUS) CAN BE FOUND IN TABLE 1, 1A. TO DETERMINE THE Vmax (Ui), Imax (Ii), Ci, AND Li VALUES THE CONTROL DRAWING FOR THE INTRINSICALLY SAFE APPARATUS SHALL BE USED. THE COMBINATION OF THE INTRINSICALLY SAFE APPARATUS AND ASSOCIATED APPARTUS MUST COMPLY WITH THE FOLLOWING:
Uo (Voc) <= Ui (Vmax)
Io (Isc) ,<= Ii (Imax)
Po <= Pi (Pmax)
Co (Ca) >= Ci + Ccable
Lo (La) >= Li + Lcable.
(SEE NOTE 4).

13.) USE MOUNTING HOLES TO SECURE TS-DTU/P TO WALL OR MOUNTING BRACKET (SUPPLIED).

REVISIONS

REV	ECO	DESCRIPTION	DATE	APPROVED
B		FOR REVIEW	01/22/01	

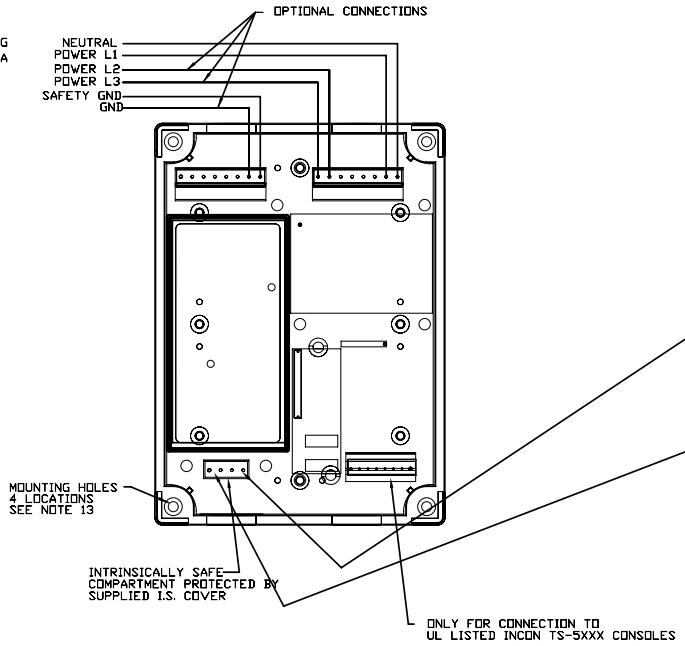

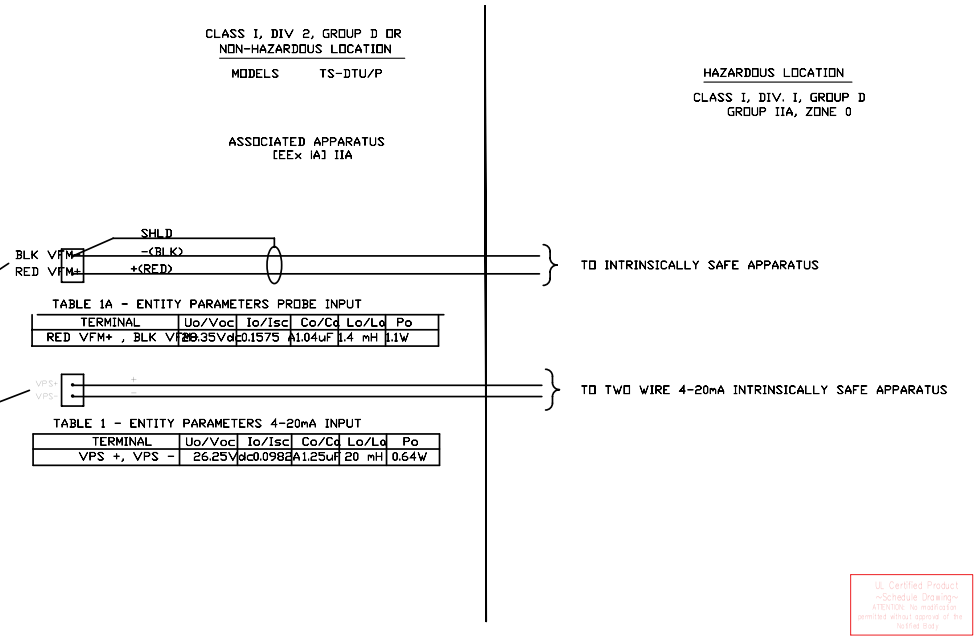

TABLE 1A - ENTITY PARAMETERS PROBE INPUT

TERMINAL	Uo/Voc	Io/Isc	Co/Ca	Lo/La	Po
RED VFM+ , BLK VFM-	20.35Vdc	0.1575 A	1.04uF	1.4 mH	1.1W

TABLE 1 - ENTITY PARAMETERS 4-20mA INPUT

TERMINAL	Uo/Voc	Io/Isc	Co/Ca	Lo/La	Po
VPS +, VPS -	26.25Vdc	0.0982A	1.25uF	20 mH	0.64W

UL Certified Product
~Schedule Drawing~
ATTENTION: No modification permitted without approval of the Notified Body

UNLESS OTHERWISE SPECIFIED
DIMENSIONS ARE IN INCHES
TOLERANCES
DECIMALS.XX ± .01
.XXX ± .005
ANGULAR: ± 0°30'
FRACTIONALS: 1/64
FINISH
DEBURR AND BREAK SHARP EDGES

AUTOCAD FILE NO. 000172 4A.DWG

DRAWN: J. Miller 8/23/01
CHECKED:
ENGR:
MFG:
QUALITY:

THE INFORMATION CONTAINED IS THE PROPRIETARY PROPERTY OF INTELLIGENT CONTROLS INC. AND IS NOT TO BE COPIED, USED OR DISCLOSED WITHOUT THE PERMISSION OF INTELLIGENT CONTROLS INC.

INCON
INTELLIGENT CONTROLS INC.

TITLE: CONTROL DRAWING
TS-DTU/P

SIZE	DO NOT SCALE DRAWING	DWG. NO.	REV
D		000-1724	B

SCALE: NONE SHEET 1 OF 1

INCON®
Franklin Fueling Systems
www.franklinfueling.com

3760 Marsh Road • Madison, WI 53718, U.S.A.
Tel: +1 608 838 8786 • Fax: +1 608 838 6433
Tel: USA & Canada 1 800 225 9787 • Tel: México 001 800 738 7610

Franklin Fueling Systems GmbH
Rudolf-Diesel-Strasse 20 • 54516 Wittlich, GERMANY
Tel: +49-6571-105-380 • Fax: +49-6571-105-510

©2008 FFS 000-0080 Rev B