Exhibit 2
SYSTEM SPECIFICATIONS

SECTION I - Healy EVR System Specifications

This exhibit contains the installation, maintenance and compliance standards and specifications that apply to the Healy Phase II EVR System Including In-Station Diagnostics (ISD) Systems installed in a gasoline dispensing facility. All components must be installed, operated, and maintained in accordance with the specifications in the **ARB Approved Installation, Operation and Maintenance (IOM) Manual**. Installation, maintenance, and repair of system components, including removal and installation of such components in the course of any required tests, shall be performed by technicians certified by the appropriate manufacturer unless otherwise specified in the IOM. Additional certifications may be required in accordance with local district requirements.

Nozzle

1. A vapor collection boot shall be installed on the nozzle at the base of the spout, as shown in **Figure 2-1**.

2. The Healy Model 900 nozzle has an integral vapor valve which prevents the loss of vapor from the underground storage tanks, ensures proper operation of the system and prevents the ingestion of air into the system. Any dispenser that has a nozzle installed that is determined to have a defective vapor valve, as described in items 2.1 or 2.2 below, shall be immediately removed from service (including nozzle(s) on both sides of dispenser) and a call for repair made immediately.

   2.1. The maximum allowable leak rate for the nozzle vapor path, as determined by TP-201.2B, shall not exceed the following:

   0.038 cubic feet per hour (CFH) at a pressure of two inches water column (2.00” wc), and
   0.10 CFH at a vacuum of one hundred inches water column (-100.00” wc)

   2.2. Verification of the integrity of the vapor valve can be performed on installed nozzles using the nozzle bag test procedure in Exhibit 7.

3. Any nozzle that dispenses fuel with the miniboot in a free state condition, as determined by the Healy quarterly inspection procedure, shall be removed from service until repaired or replaced.

Vapor Collection

1. The V/L ratio of the system shall be **1.05 plus or minus 0.10 (0.95 to 1.15)**, measured at a flow rate between six and ten gallons per minute (6.0 – 10.0 gpm). *Any fueling point whose V/L ratio is determined to be at or below 0.80 shall be deemed defective and removed from service.* The V/L ratio shall be determined by using the test procedure in Exhibit 5 with the shut-off port excluded, or with an ARB approved alternate test procedure. See Section 7 of Exhibit 5 for guidance on V/L adjustment.

2. Inoperative vapor pumps, as determined by the ***ARB Approved Installation, Operation and Maintenance Manual***, constitute a defect.

3. For unihose dispensers, any modifications or repairs to the nozzle, hanging hardware or vacuum pump done to bring one fuel grade V/L into compliance at a fueling point invalidates the results of any previous fuel grade(s) tested before the alteration. All fuel grades at that fueling point shall be tested again to verify compliance.

Inverted Coaxial Hoses

1. The maximum length of the hose assembly, including hose adaptor, whip hose, breakaway, flow limiter (optional) and inverted coaxial hose, measured from the base of the nozzle to the end of dispenser adapter or dispenser, as appropriate, shall be no more than twenty (20) feet.

2. Any hose configuration is allowed.

Breakaway Couplings

1. Testing is required after reconnecting the breakaway to ensure proper operation and no observed leaks. The procedure for reconnecting breakaway and fueling point testing after a drive-off, referenced in Section 1.4 of Healy Systems Scheduled Maintenance, shall be conducted to verify that breakaway, hose and nozzle are operating properly after a drive-off.

Flow Limiters

1. Flow limiter is mandatory when the flow rate is greater than 10.0 gallons per minute to comply with U.S. EPA requirement.

Clean Air Separator Pressure Management System

1. The Clean Air Separator is a passive gasoline storage tank ullage pressure management system, with no electrical requirements. The Clean Air Separator vapor integrity shall be evaluated using the test procedure outlined in Exhibit 4 of this Executive Order.

   a. The system shall be removed from service when the Clean Air Separator fails the leak decay test outlined in Exhibit 4.

   b. Unless there is maintenance or testing being conducted on the Clean Air Separator, the system shall be removed from service when the four ball valves are not locked in the positions shown in **Figure 2-2** or **2-2H** for normal Clean Air Separator operation. Figure 2-2 applies to vertical Clean Air Separator installations and Figure 2-2H applies to horizontal Clean Air Separator installations.

2. The Clean Air Separator shall be installed within 100 feet from the vent line(s), and the associated piping shall be sloped 1/8" per foot minimum toward the vent line(s).

Pressure/Vacuum Vent Valves for Gasoline Storage Tank Vents

1. All P/V vent valves shall be an ARB-certified P/V vent valve for a Phase I system.

2. At least one pressure/vacuum (P/V) vent valve shall be installed on each gasoline storage tank vent. The maximum number of P/V vent valves allowed and P/V vent valve performance specifications are listed in the applicable Phase I EVR Executive Order. Vent lines may be manifold to minimize the number of P/V vent valves and potential leak sources, provided the manifold conforms to all applicable fire regulations. At least one P/V vent valve shall be installed on vents if a manifold is incorporated. **Figure 2-3** or **2-3H** shows a typical manifold configuration for a single P/V vent valve with the Clean Air Separator. If two or more P/V vent valves are desired, they shall be installed in parallel, so that each can serve as a backup to the other if one should fail to open properly. **Figure 2-4** or **2-4H** shows a typical manifold configuration for two P/V vent valves installed in parallel with the Clean Air Separator. **Figure 2-5** or **2-5H** shows a typical manifold configuration for three P/V vent valves installed in parallel with the Clean Air Separator. **Figure 2-6** or **2-6H** shows a typical configuration for a P/V vent valve mounted on a single 3" vent line with the Clean Air Separator. Figures 2-3, 2-4, 2-5 and 2-6 apply to vertical Clean Air Separator installations. Figures 2-3H, 2-4H, 2-5H and 2-6H apply to horizontal Clean Air Separator installations.

Warranty

1. Each manufacturer listed in Exhibit 1 shall include a warranty tag with the certified component(s). The manufacturer warranty tag, included with each component, shall be provided to the service station owner/operator at the time of installation.

Vapor Recovery Piping Configurations

NOTE: Vapor return piping shall meet the piping requirements specified in section 4.11 of CP-201.

1. Vapor Return and Vent Lines

   a. For facilities installed on or after April 1, 2003, all vapor return and vent lines shall be a minimum nominal internal diameter of 2 inches from the dispensers or the vent stacks to the first manifold. All lines after the first manifold and back to the underground storage tank shall have a minimum nominal internal diameter of 3 inches.

      Note: Facilities permitted by a local district prior to April 1, 2003 shall be required to meet the three inch diameter standard only upon facility modification which involves the addition, replacement, or removal of 50 percent or more of the buried vapor piping.

      After backfilling the vapor return and vent lines, the maximum pressure drop shall not exceed 0.5 inches WC at 60 cubic feet per hour as determined by TP-201.4, Dynamic Backpressure. The pressure drop shall be measured from the dispenser riser to the UST with pressure/vacuum vent valves installed and with the poppeted Phase I vapor connection open.

   b. For existing installations, the maximum pressure drop through the system shall not exceed 0.5 inches WC at 60 cubic feet per hour as determined by TP-201.4, Dynamic Backpressure. The pressure drop shall be measured from the dispenser riser to the UST with the pressure/vacuum vent valves installed and with the poppeted Phase I vapor connection open.

   Note: The V/L test from Exhibit 5 may be used to verify proper operation of the system, in lieu of measuring the pressure drop through the lines, provided that at least two gallons of product are introduced into the system through each dispenser riser, prior to the test.

2. All vapor return lines shall have a minimum slope of 1/8 inch per foot from the dispenser riser to the riser of the underground storage tank (UST). A slope of 1/4 inch or more per foot is recommended wherever feasible. The vapor return path from any dispenser riser to the UST shall be free of liquid or fixed blockage.

   Exception: When it is not possible to achieve the necessary minimum slope from the dispenser back to the underground storage tanks, a low point Liquid Condensate Trap (i.e. knock out pot, thief port) can be utilized as long as the conditions under **Liquid Condensate Traps** in this Exhibit 2 are met.

3. The dispenser shall be connected to the riser with either flexible or rigid material that is listed for use with gasoline. The dispenser-to-riser connection shall be installed so that any liquid in the lines will drain toward the gasoline storage tank. The internal diameter of the connector, including all fittings, shall not be less than one-half inch (1/2”).

   Note: The dispenser-to-riser connection is defined as the piping connection between the outlet of the vapor flow meter and the inlet of the dispenser riser. A vapor shear valve may also be part of the riser connection.

4. There is no length restriction for the vapor return piping of the system as long as the system complies with the maximum pressure drop requirement of Item 1 (or the V/L option).

5. No product shall be dispensed from any fueling point at a GDF installed with the Healy Phase II EVR System Including In-Station Diagnostics (ISD) Systems if there is a vapor line that is disconnected and open to the atmosphere.

Dispenser Vapor Piping

1. Any dispenser with a dispenser piping test valve in the closed position shall be considered a defect.

2. The ball valve shall be installed between the test port and the vacuum pump. The ball valve and test port shall be located on the inlet side of the vacuum pump.

3. If the vapor flow meter is installed below the vapor shear valve, then a “Y” fitting for introducing liquid shall be installed below the vapor flow meter.

4. The vapor flow meter shall be installed on the down stream side of the vacuum pump.

5. The Vapor Pressure Sensor shall be installed into one of the dispensers at the GDF located closest to the underground storage tanks (If a row of dispensers are equal distance from the gasoline tank pad and within 10’ of each other, any dispenser can be used).

Liquid Condensate Traps

1. There shall be no vapor leaks when tested in accordance with the latest version of TP 201.3, **Determination of 2 Inch WC Static Pressure Performance of Vapor Recovery Systems of Dispensing Facilities**.

2. The Liquid Level Sensor shall alarm within five (5) minutes when tested in accordance with Exhibit 11, **Liquid Condensate Trap Compliance Test**.

3. The Liquid Level Sensor audible alarm shall be installed at a location that is most likely to be heard by the station attendant during normal station operation (e.g.

cash register).

4. The Liquid Evacuation System shall automatically evacuate gasoline when tested in accordance with Exhibit 11, **Liquid Condensate Trap Compliance Test.**

5. A metal tag specifying the capacity of the Liquid Condensate Trap shall be installed and maintained as specified in the Installation, Operation, and Maintenance Manual.

Maintenance Tracker Kit for Veeder Root TLS Console (Optional)

- The Maintenance Tracker kit consists of the following devices:
- Maintenance Tracker Technician Key (Figure 2-7)
- Interface Module RS232/485 Dual Module with DB9 Converter or Single Port Module with DB-25 converter (Figure 2-8)
- Manual

In-Station Diagnostics

Veeder-Root In-Station Diagnostics

1. The gasoline dispensing facility operator/owner and contractor shall comply with local district requirements, if any, following a warning by the Veeder-Root In-Station Diagnostics (ISD) system.

2. Suggested Troubleshooting, found in Table 5-1 of the Veeder-Root In-Station Diagnostics ISD) Install, Setup, and Operation Manual (ARB Approved Installation, Operation, and Maintenance Manual), recommends that certain tests be conducted to verify the cause of the ISD warning or failure alarms. Districts may require that these tests or other tests specified by the districts be conducted in response to the ISD alarms.

INCON Vapor Recovery Monitoring

1. The gasoline dispensing facility operator/owner shall comply with local district requirements, if any, following a warning by the INCON Vapor Recovery Monitoring system and a shut down of individual dispensers for all gasoline products by the vapor recovery.

2. Suggested Troubleshooting, found in Appendix A of the INCON Vapor Recovery Monitoring Install, Setup, and Operation Manual (ARB Approved Installation, Operation, and Maintenance Manual), recommends that certain tests be conducted to verify the cause of the warning or failure alarms. Districts may require that these tests or other tests specified by the districts be conducted in response to the monitoring system alarms.

Phase I System

1. The Phase I system shall be an ARB-certified system that demonstrates compliance with the static pressure decay test criteria contained in the latest version of TP-201.3.

Maintenance and Alarm History Records

1. Each GDF operator/owner shall keep records of maintenance performed at the facility. Such records shall be maintained on site or in accordance with district requirements or policies. The records shall include the maintenance or test date, repair date to correct test failure, maintenance or test performed, affiliation, telephone number, name and Certified Technician Identification Number of individual conducting maintenance or test. Additional information may be required in accordance with local district requirements.

   Each GDF operator/owner shall keep records of all alarms detected by the ISD system. Alarm History records shall be maintained on site or in accordance with district requirements or policies. The records shall include the alarm date, the nature of the alarm, type of test and test date to verify the validity of ISD alarm, maintenance or repair date to correct the cause of the alarm, maintenance or repair performed to correct the cause of the alarm, affiliation, telephone number, name and Certified Technician Identification Number of individual conducting maintenance or test. Additional information may be required in accordance with local district requirements**.**

   An example of a GDF Maintenance and Alarm History Record is shown in **Figure 2-9**.

2. Maintenance shall be conducted in accordance with Healy Systems Scheduled Maintenance document in ***ARB Approval Installation, Operation and Maintenance Manual***.

3. Reconnection of breakaways shall be included in the maintenance records.

FIGURE 2-1
Vapor Boot for Healy 900 Nozzle

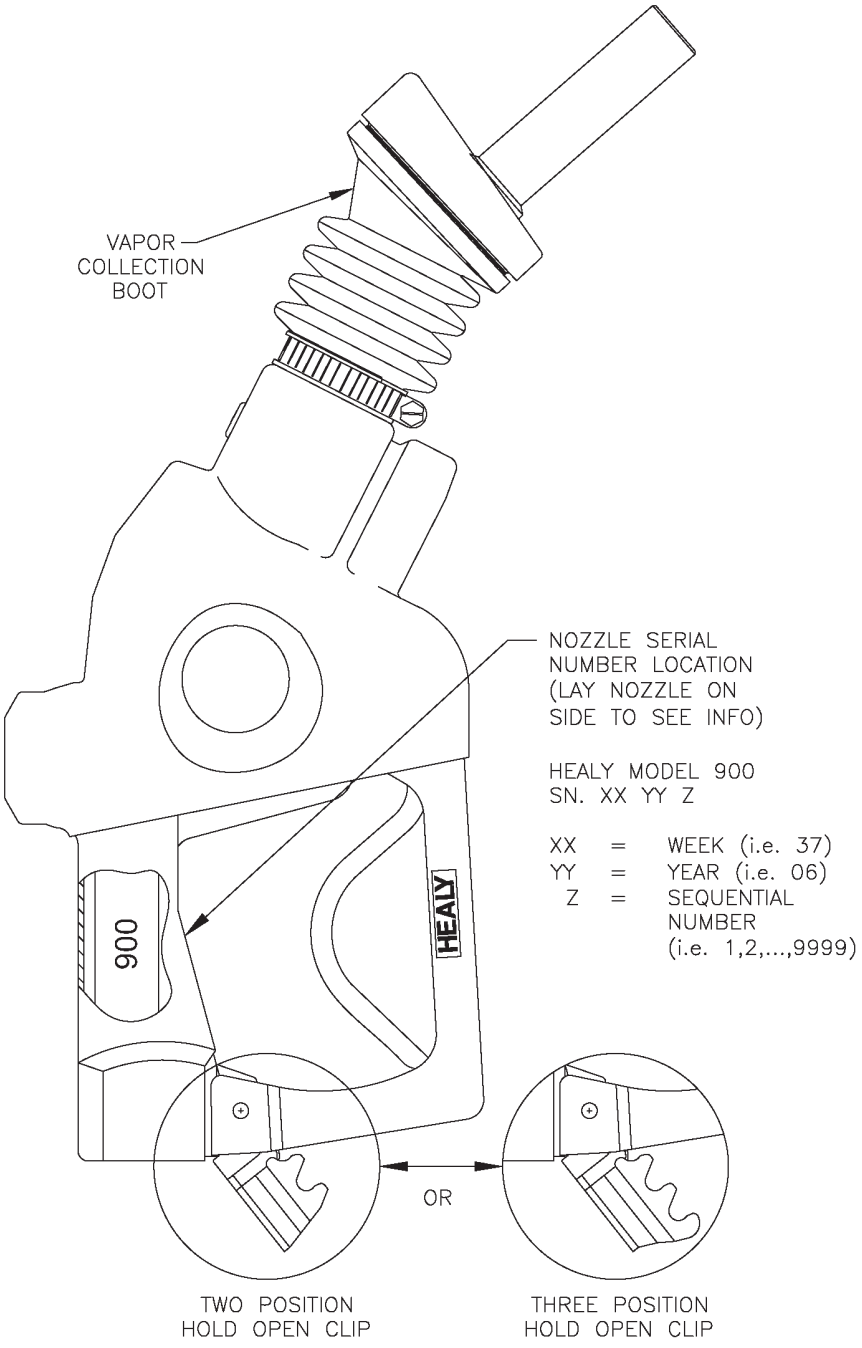

FIGURE 2-2
Clean Air Separator Normal Operation Configuration

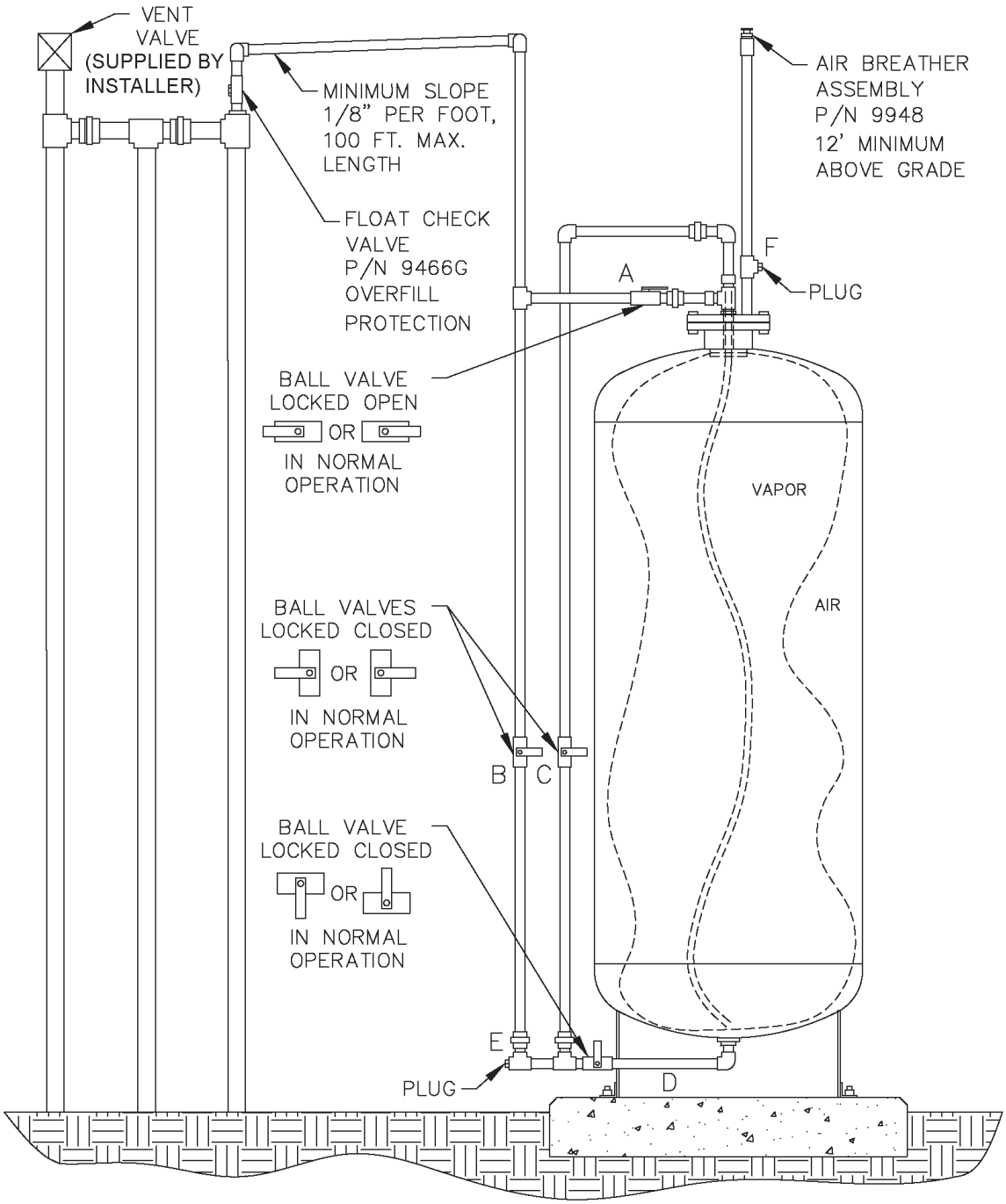

FIGURE 2-2H
Clean Air Separator Normal Operation Configuration

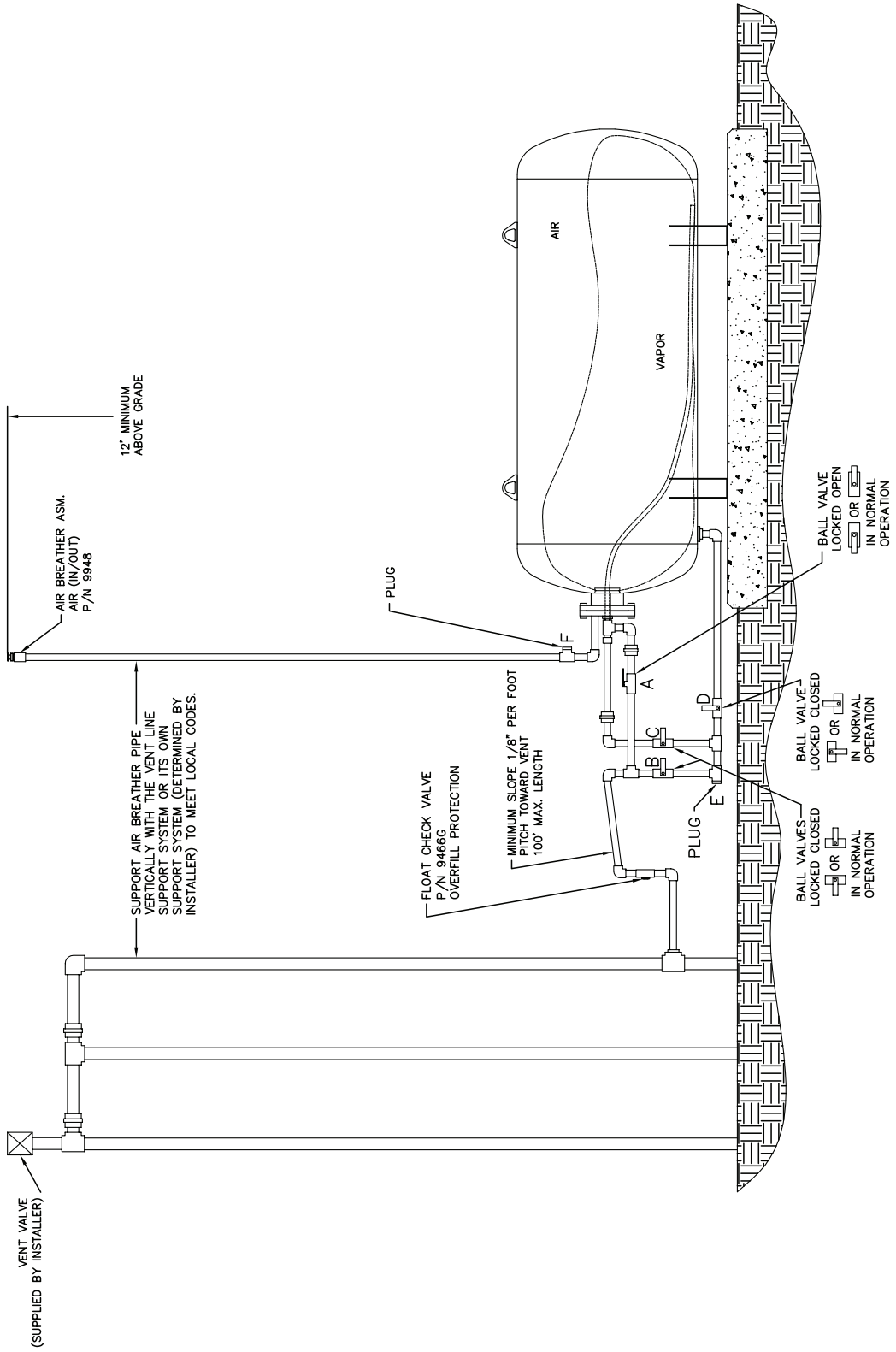

FIGURE 2-3
Typical Installation of a Single P/V Vent Valve Manifold with Healy Clean Air Separator

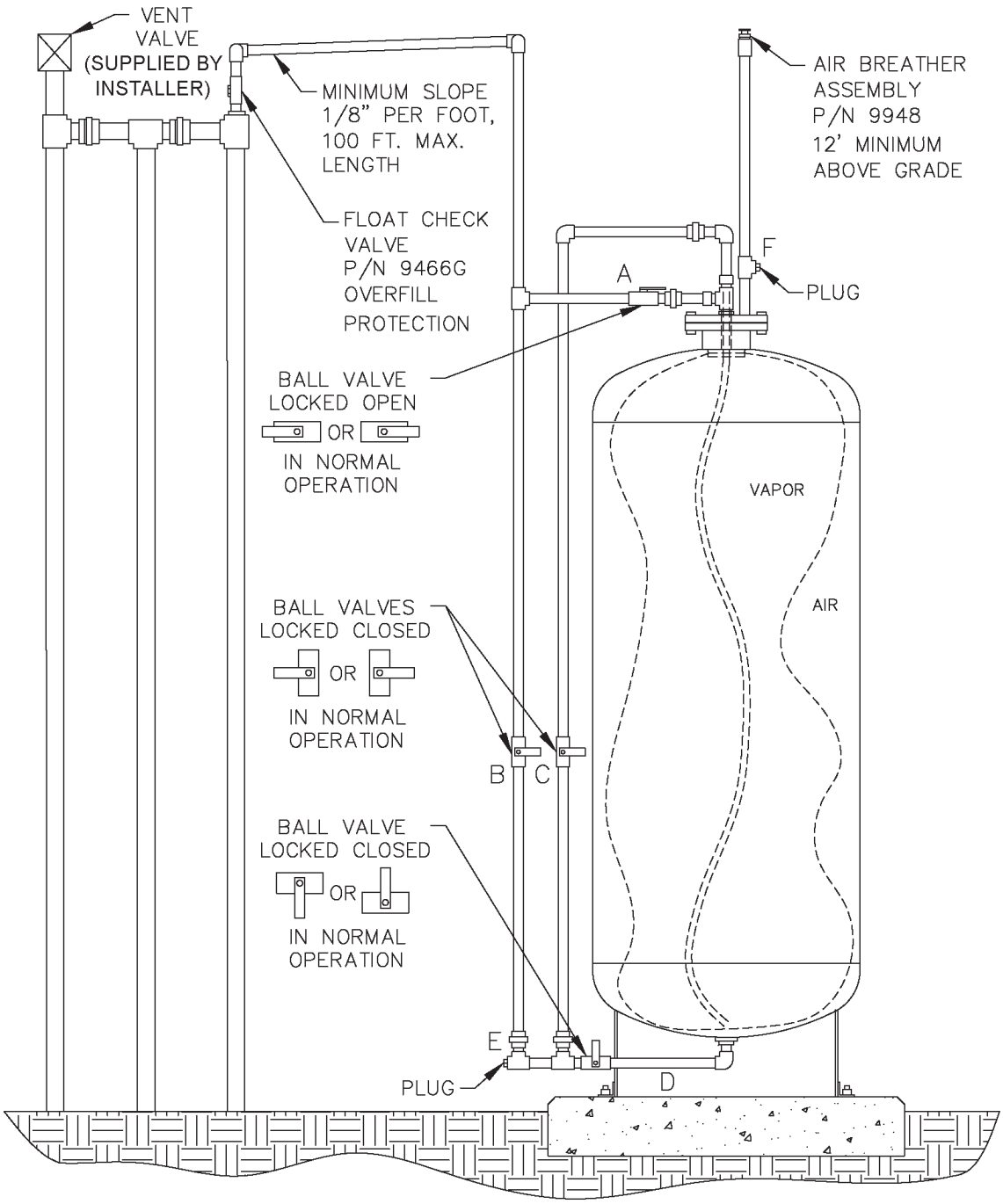

FIGURE 2-3H
Typical Installation of a Single P/V Vent Valve Manifold with Healy Clean Air Separator

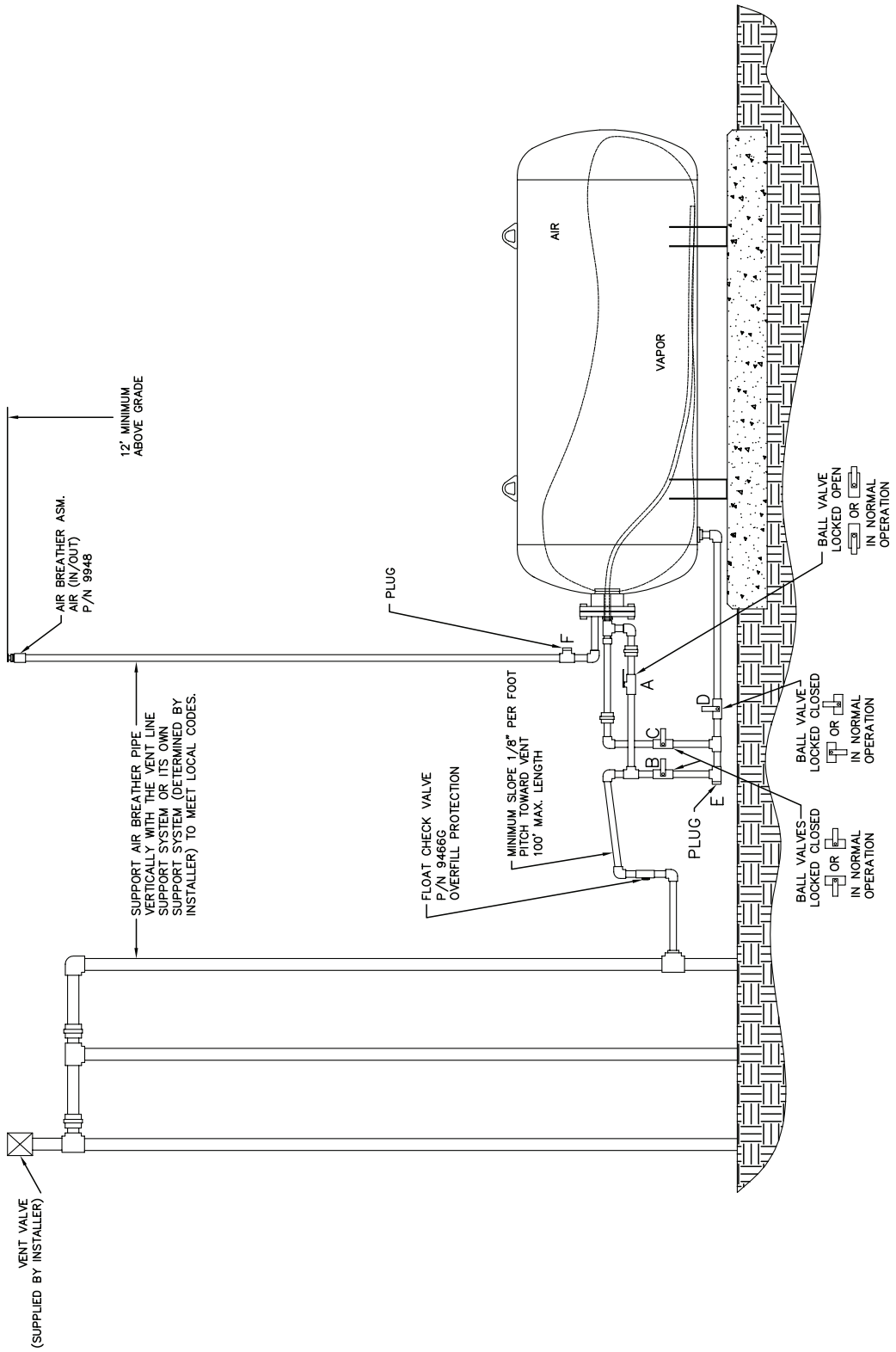

FIGURE 2-4
Typical Installation of a Two P/V Vent Valve Parallel Manifold with Healy Clean Air Separator

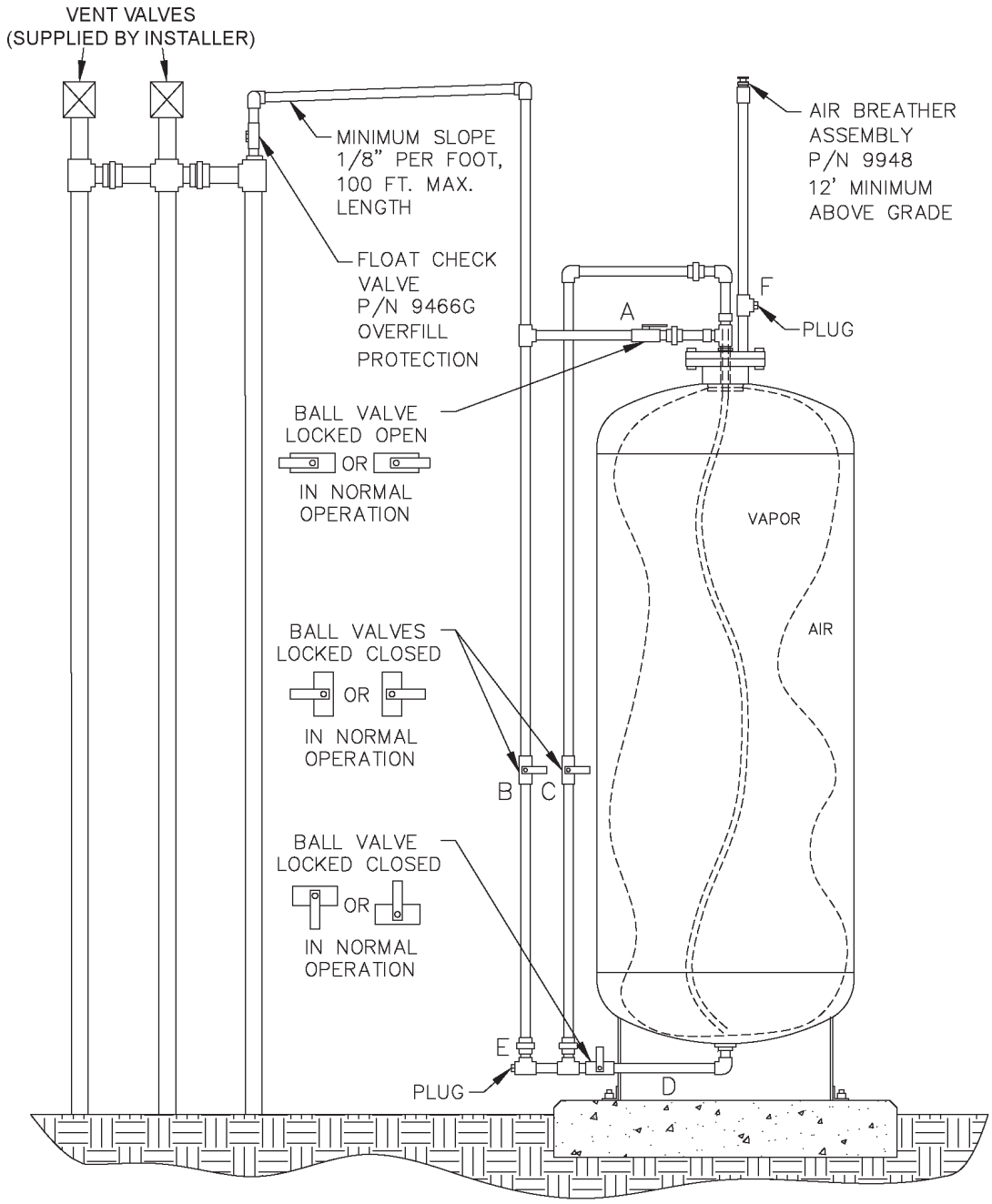

FIGURE 2-4H
Typical Installation of a Two P/V Vent Valve Parallel Manifold with Healy Clean Air Separator

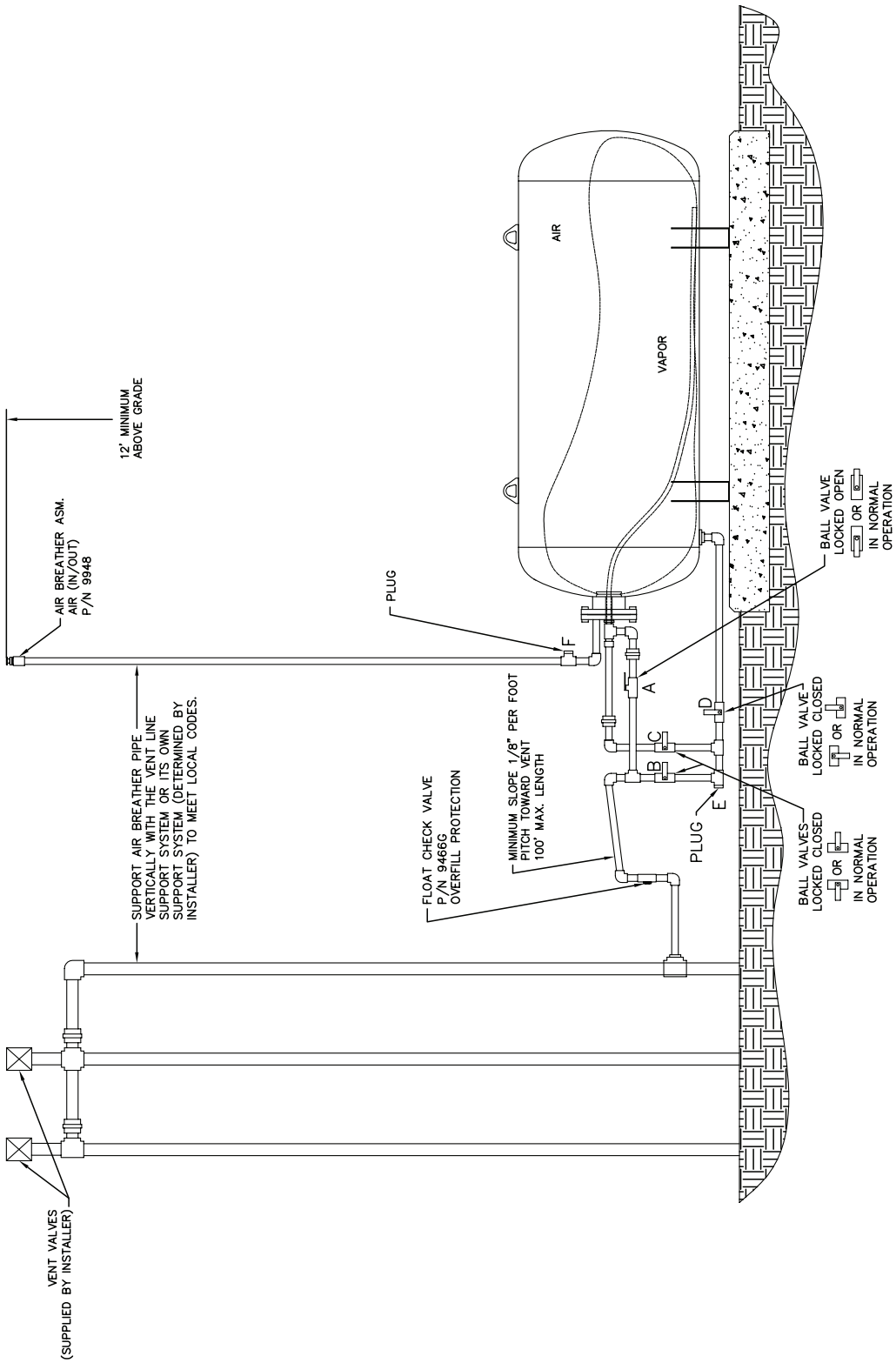

FIGURE 2-5
Typical Installation of a Three P/V Vent Valve Parallel Manifold with Healy Clean Air Separator

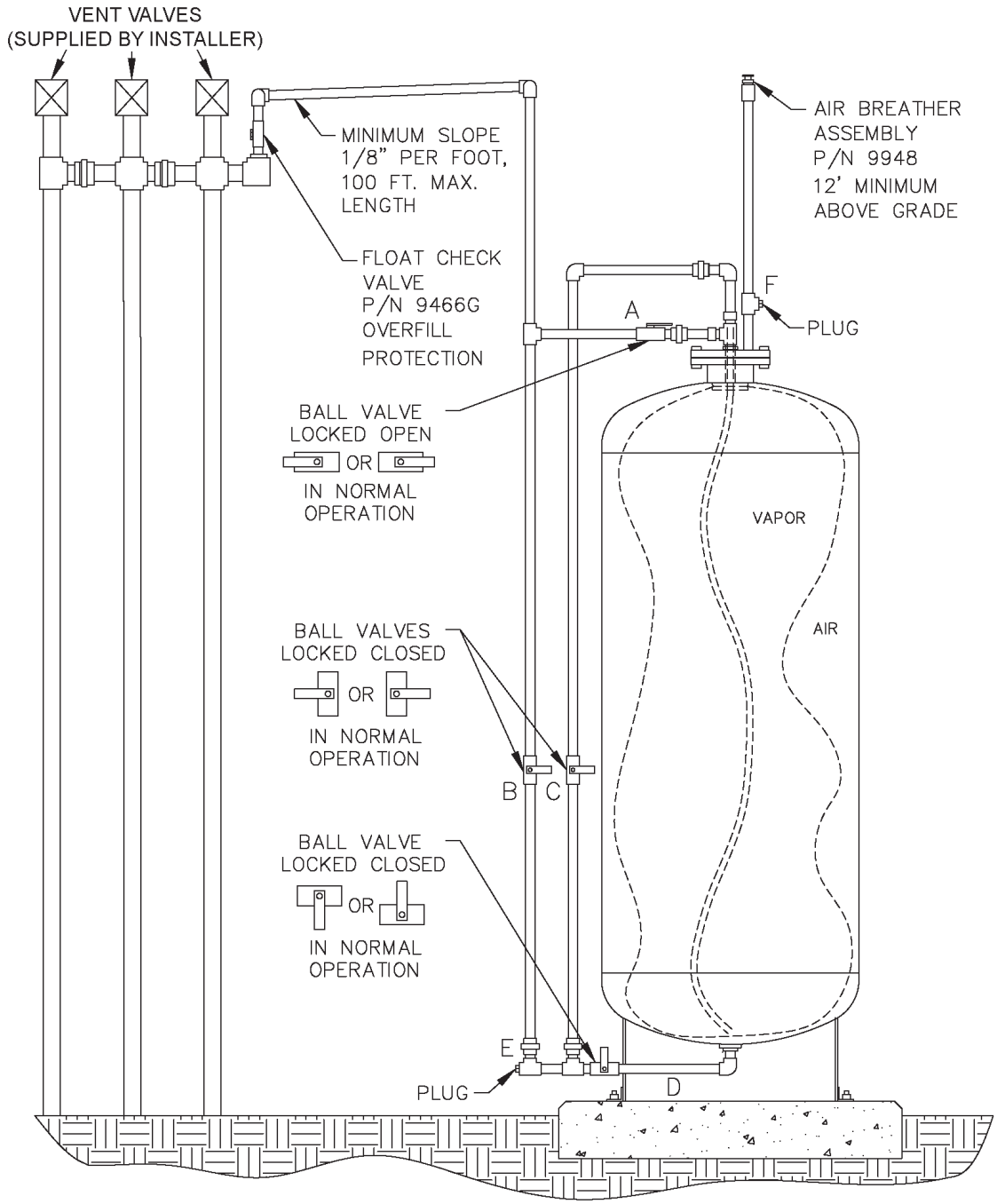

FIGURE 2-5H
Typical Installation of a Three P/V Vent Valve Parallel Manifold with Healy Clean Air Separator

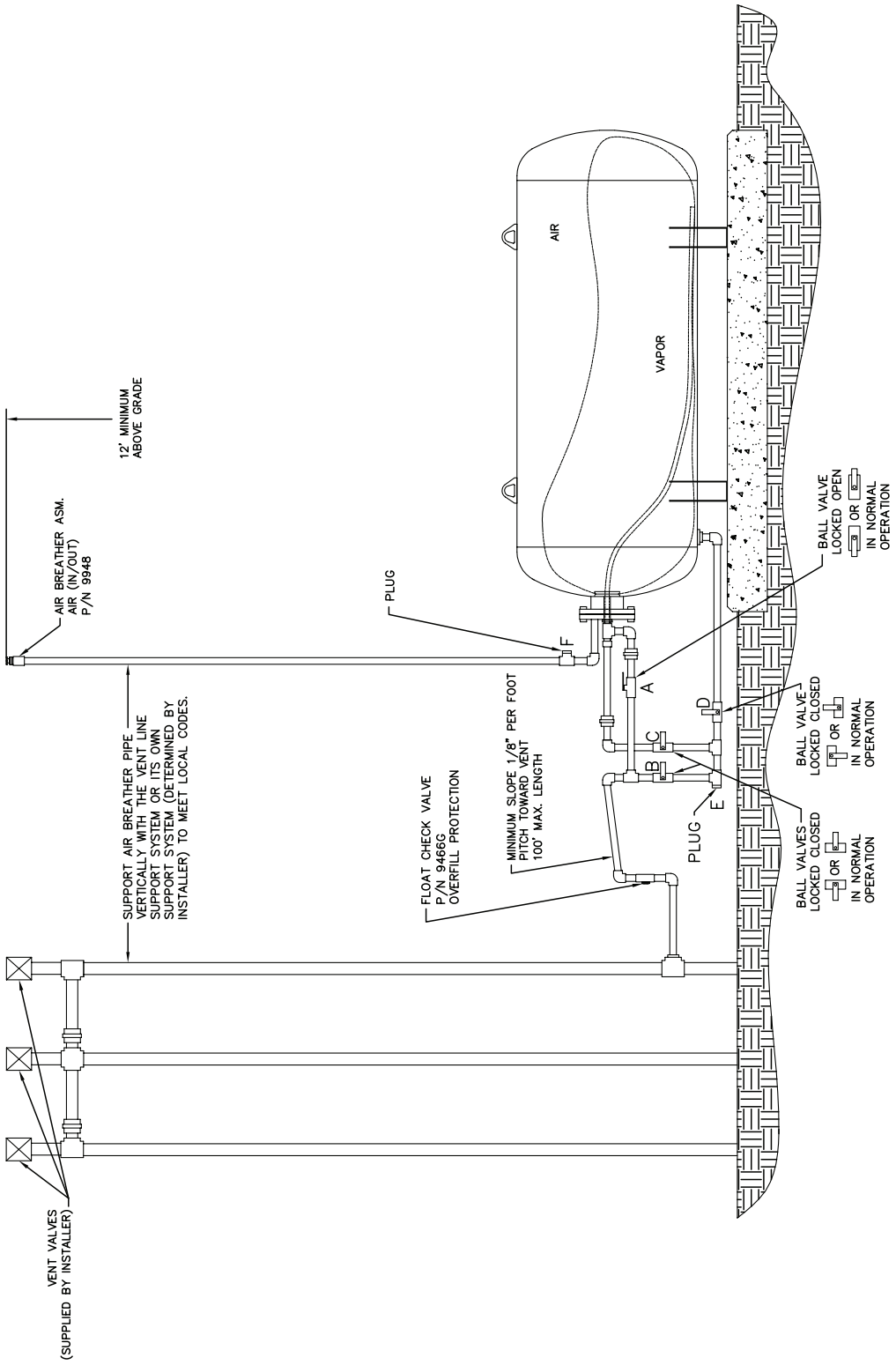

FIGURE 2-6
Typical Configuration of a P/V Vent Valve Mounted on a Single 3" Vent Line with the Clean Air Separator

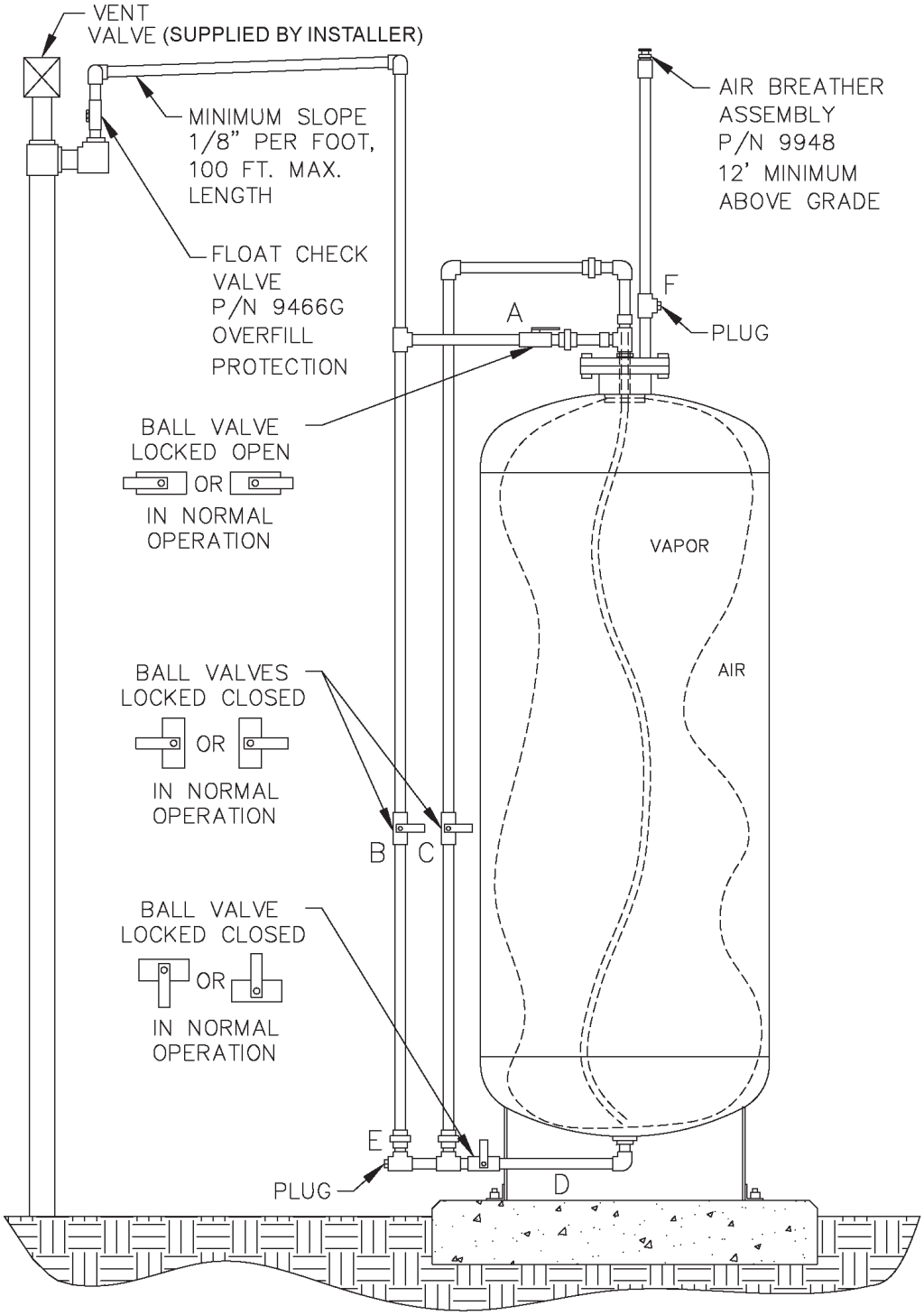

FIGURE 2-6H
Typical Configuration of a P/V Vent Valve Mounted on a Single 3" Vent Line with the Clean Air Separator

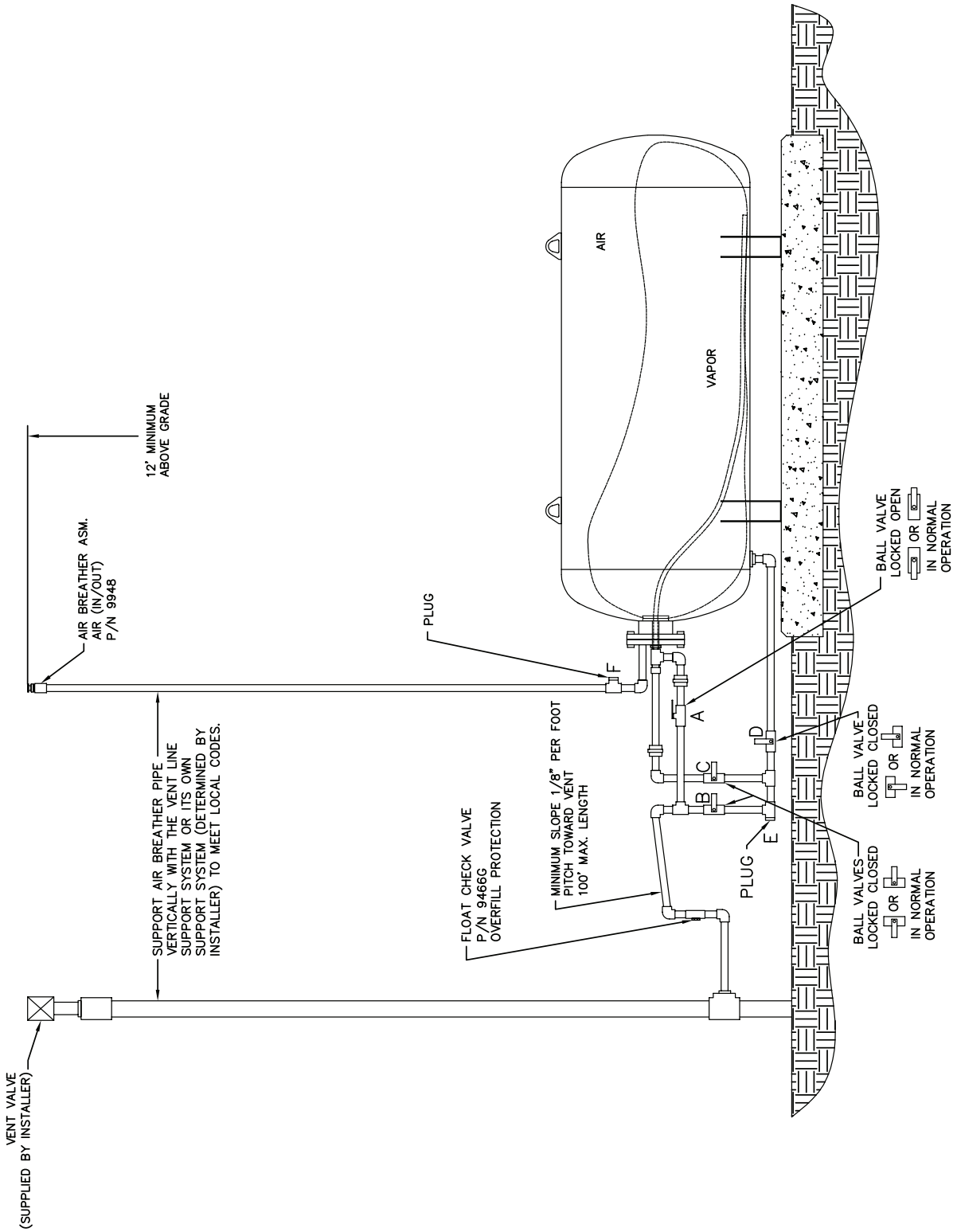

FIGURE 2-7
Maintenance Tracker Technician Key

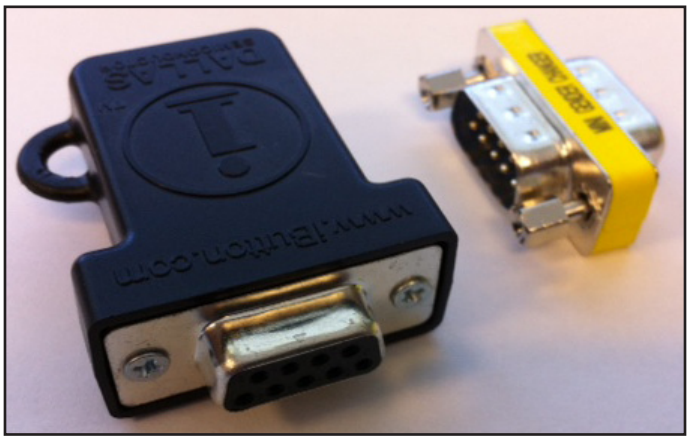

FIGURE 2-8
Interface Module RS232/485
Dual Module with DB9 Converter or
Single Port Module with DB-25 converter

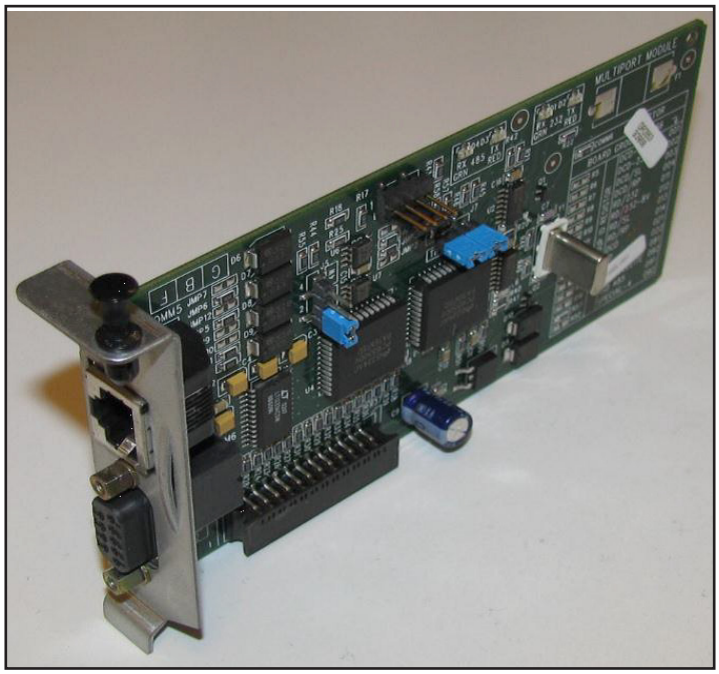

FIGURE 2-9
Example of a GDF Maintenance Record and Alarm HIstory

Date of Maintenance / Test / Inspection/ Failure / Alarm History (including date and time of maintenance call)	Repair Date To Correct Test Failure	Maintenance/Test/Inspection Performed and Outcome	Affiliation	Name and Technician ID number of Individual Conducting Maintenance or Test	Telephone Number

SECTION II - In-Station Diagnostics Systems

Option 1 - Veeder-Root ISD System Specifications

TLS Console & ISD Software Version Number

The ISD audible alarms shall be installed at a location that is most likely to be heard by the station attendant during normal station operation (e.g., cash register). The TLS console shall be installed in a location that allows the RS232 port to be easily accessible, and if applicable, per district requirements, for use at anytime. A vacant RS232 serial port shall always be available to electronically download reports.

The presence of ISD and the ISD software version number can be verified on the TLS Console LCD screen by using the <STEP> key or by using the TLS Console <PRINT> key to print and review the latest ISD Daily Report. **See Figure 2-ISD-VR-1** and **2-ISD-VR-2** for TLS and ISD verification instructions.

The TLS Console must have a printer as well as an RS232 interface port.

If the TLS is equipped with security features which prohibit access to the TLS, instructions to override these security features shall be maintained on site in accordance with air district requirements and shall be available to the air district upon request.

Table 1 provides a list of expiration dates for each ISD Software version.

If Veeder-Root's "Maintenance Tracker" is installed and enabled, access to the "diagnostic mode" and "set-up mode" of the TLS Console is prohibited unless a Maintenance Tracker Technician Key or personal computer equipped with Veeder-Root's ISD Setup Tool Software Version 1.09 or higher is made available. Maintenance Tracker is an optional security device designed to prevent unauthorized tampering and clearing of Veeder-Root tank monitoring and ISD alarms. Maintenance Tracker resides within the TLS console and when enabled, a message will appear on the two line display of the TLS console. For additional instructions on how to access the desired parameters to complete this test procedure, see Exhibit 12 Veeder-Root Maintenance Tracker (Optional).

TABLE 1
Veeder-Root ISD System Software Version Expiration Dates

Phase II EVR System Description	Software Version	Last Date Software May Remain In Use	Notes
Healy (Assist) VR-202 Series	Version 1.00	12/15/2010	Subject GDFs must upgrade to the certified software version (1.01 or later)
	Version 1.01* for Multi-Product (six pack) Dispensers with Fuel Blending	07/01/2012	Only applies to GDFs equipped with multi-product dispensers with fuel blending. Does not apply to GDFs equipped with uni-hose dispensers with fuel blending. Subject GDFs must upgrade to the certified software version (1.02 or later)
	Version 1.02, 1.03, 1.04	N/A	May Remain in Use at Existing Facilities
	Version 1.05	N/A	Required for New Installations and Major Modifications

*Existing sites equipped with Veeder-Root Software Version 1.01 may remain in use only if equipped with uni-hose or muliti-product dispenser without fuel blending.

Operability Test Procedure

The Veeder-Root ISD operability test procedure provided in Exhibit 9, and in section 4 of the ***ARB Approved Installation, Operation and Maintenance Manual***, shall be used at GDF sites to determine the operability of the Veeder-Root ISD system to comply with applicable performance standards and performance specification in CP-201. Testing the ISD equipment in accordance with this procedure will verify the proper selection, setup and operation of the TLS Console sensors and interface modules.

The Vapor Flow Meter

The Veeder-Root ISD system requires one Vapor Flow Meter per dispenser installed via the ***ARB Approved ISD Vapor Flow Meter Manual 577013-796, Rev. E for the Veeder-Root ISD System***. The Vapor Flow Meter shall be installed into dispensers listed in Exhibit 1 of this Executive Order in accordance with the ***ARB Approved Installation, Operation and Maintenance Manual***. The Vapor Flow Meter is an intrinsically safe sensor that is wired to the TLS Console Smart Sensor Module via a conduit dedicated to TLS Console low-voltage sensors. **Figure 2-ISD-VR-3** shows the ISD Vapor Flow Meter. **Figures 2-ISD-VR-7** and **2-ISD-VR-8** show the installation configuration. **Figure 2-ISD-VR-10** shows the wireless components for Veeder-Root ISD. **Figure 2-ISD-VR-11** shows a typical installation of the wireless VFM transmitter in a dispenser.

The Vapor Pressure Sensor

The Veeder-Root ISD system requires one Vapor Pressure Sensor per GDF installed into one of the dispensers located closest to the gasoline tanks (If a row of dispensers are equal distance from the gasoline tank pad and within 10' of each other, any dispenser can be used) in accordance with the ***ARB Approved Installation, Operation and Maintenance Manual***. The Vapor Pressure sensor shall be installed into dispensers listed in Exhibit 1 of this Executive Order. For vapor vent stack installation, install the pressure sensor on the vent stack line closest to the tank being monitored, in accordance with Section 21 of the **ARB Approved IOM Manual**. The Vapor Pressure Sensor is an intrinsically safe sensor that is wired to the TLS Console Smart Sensor Module via a conduit dedicated to TLS Console low-voltage sensors. **Figure 2-ISD-VR-4** shows wired and low voltage wireless ISD Vapor Pressure Sensor drawings, and the optional dryer tube drawing. **Figures 2-ISD-VR-7** and **2-ISD-VR-8** show the installation configuration. **Figure 2-ISD-VR-9** shows the installation configuration of the Veeder-Root vapor pressure sensor on a vapor vent stack. **Figure 2-ISD-VR-10** shows the wireless vapor flow meter components. **Figure 2-ISD-VR-12** shows an Overview of Veeder-Root Wireless Vapor Pressure Sensor Vent Stack Installation.

Dispenser Interface Module (DIM)

Existing Dispenser Interface Modules or DIM communication cards are used to interface to the dispenser Point Of Sale (POS) or controller system to gather fuel transaction data. The ISD Operability Test Procedure provided in Exhibit 9 and in Section 4 of the Veeder-Root ISD Install, Setup and Operation Manual can be used to verify the proper selection and setup of the Dispenser Interface Module. See **Figure 2-ISD-VR-5** for a typical Dispenser Interface Module Illustration.

Tank Inventory Probe Sensor

Existing Tank Inventory Probe sensors (one per gasoline storage tank) are used to measure the amount of vapor space in the Underground Storage Tanks (USTs). The ISD Operability Test Procedure can be used to verify the proper selection and setup of the Tank Inventory Probes. See **Figure 2-ISD-VR-6** for a typical Tank Inventory Probe Sensor.

Shutdown Control

The TLS Console must be wired per the Veeder-Root ISD Install, Setup and Operation Manual 557013-800, Rev. E of the ARB Approved Installation, Operation and Maintenance Manual for the Healy Phase II EVR System Including the Veeder-Root ISD System such that it shall automatically prohibit the dispensing of individual dispensers or through shutdown of all the gasoline turbine pumps during a CP-201 ISD failure alarm. It shall also automatically prohibit the dispensing of all dispensers during TLS Console ISD system power loss.

TLS Console Modules

The ISD Operability Test Procedure in Exhibit 9 and in section 4 of the Veeder-Root ISD Install, Setup, and Operation Manual of the ***ARB Approved Installation, Operation, and Maintenance Manual*** shall be used to verify the proper selection and setup of the TLS Console Modules.

Training Program

All Veeder-Root contractors must successfully complete the applicable Veeder-Root training program before they can install, startup, and service TLS Console equipment as shown in the following table:

TABLE 2
Veeder-Root Contractor Training Certification Requirement

Veeder-Root Contractor Certification Requirements	Installer Certification[6]	ATG Technician Certification[7]	VR Vapor Products Certification[8]
Install[1] ISD	●	●	●
Install PMC	●	●	●
Install CCVP	●	●	●
Install Wireless ISD/PMC	●	●	●
Installation Checkout[2]		●	●
ATG Startup[3] / Training[4] / Service[5]		●	●
ISD Startup / Training / Service			●
PMC Startup / Training / Service			●
CCVP Startup / Training / Service			●
Wireless ISD/PMC Startup / Training / Service			●
Install Pressure Sensor (ATG)	●	●	●
Maintain Pressure Sensor (ATG)		●	●
Calibrate Pressure Sensor (ATG)		●	●
Clear ATG Pressure Sensor Alarm (ATG)		●	●
Clear ISD/ PMC alarms (ISD/PMC)		●	●

NOTE: A current Veeder-Root Installer Certification is a prerequisite for the ATG Technician Certification course.

[1] Perform wiring and conduit routing; equipment mounting
[2] Inspect wiring and conduit routing; equipment mounting
[3] Turn power on, program and test the systems
[4] Provide supervised field experience in service techniques and operations
[5] Troubleshoot and provide routine maintenance as specified in the IOM
[6] UST Monitoring Systems – Installer (Level 1)
[7] Certified UST Monitoring Technician
[8] VR Vapor Products

The schedule, fee and registration information for the Authorized Service Contractor (ASC) training program can be found at http://www.veeder.com. To confirm TLS or ISD training a regulator should send an email to technicaltraining@gilbarco.com with the name (and company) of the ASC to obtain verification of the ASC TLS/ISD training status or call 800-997-7725 and press “4” to get to the Veeder-Root menu and then “*” to speak to a representative or sign on to the Gilbarco Learning Suite at http://wise.gilbarco.com.

Maintenance

The TLS console, including interface modules, do not require scheduled maintenance. ISD System Self-Test Monitoring algorithms are designed to verify proper selection, setup and operation of the TLS console and sensors.

There is no recommended maintenance, inspection nor calibration for the Vapor Flow Meter or the Vapor Pressure Sensor. Servicing should be performed in response to warning or alarm conditions.

RF Wireless Components

The Veeder-Root wireless components must be installed in accordance with I**OM 28: TLS RF Wireless 2 System (W2) Installation and Maintenance Guide of the ARB Approved IOM.** The wireless system consists of the following devices (Figure 2-ISD-VR-10)

a. RF Receiver-2
b. RF Repeater-2
c. RF Transmitter-2
d. RF Battery Pack
e. TLS RF Console-2 Box

These devices convert data in smart-sensor-protocol format to RF format and back to smart-sensor format for TLS such that TLS software assumes it is directly connected to the sensor. The transmitter automatically identifies the Flow Meter connected to it and polls it periodically. The collected data is converted to radio format and transmitted through air to receiver. The receiver collects the radio packet and within 200ms sends the data to the TLS RF on RS485 bus. The TLS RF provides this data to TLS on next poll by TLS. To prevent adjacent GDF with wireless equipment from interfering with each others transmissions, dip switches on the Transmitter and Receiver are used to configure a site ID. The Repeater is not required, but may be installed as needed to provide a second path for the wireless signal traveling from Transmitter to Receiver.

FIGURE 2-ISD-VR-1
Finding The Veeder-Root ISD Version Number

Use the TLS Console <FUNCTION> key to find the ISD Daily Report menu:

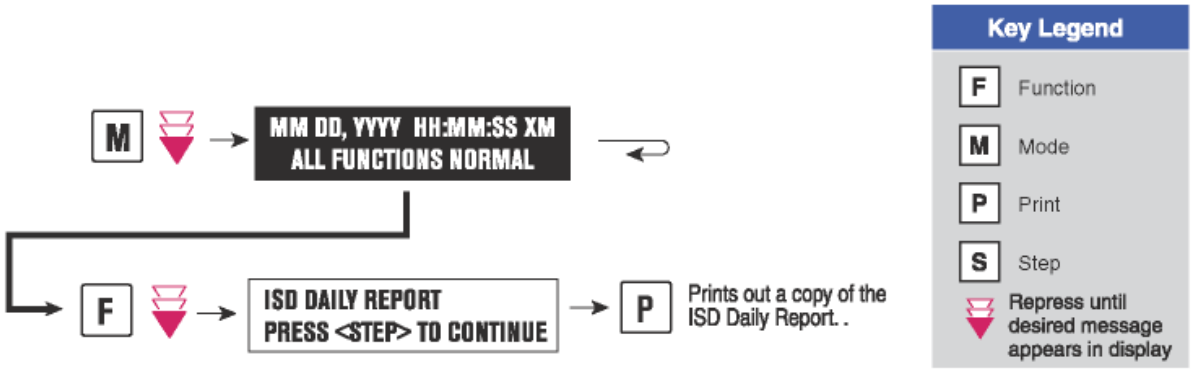

The ISD version number can be verified on the TLS Console LCD screen using the <STEP> key or by using the TLS Console <PRINT> key to print and review the latest ISD Daily Report:

Presence of the ISD Daily Report menu and correct ISD software version number is evidence that ISD is installed and activated in the TLS Console.

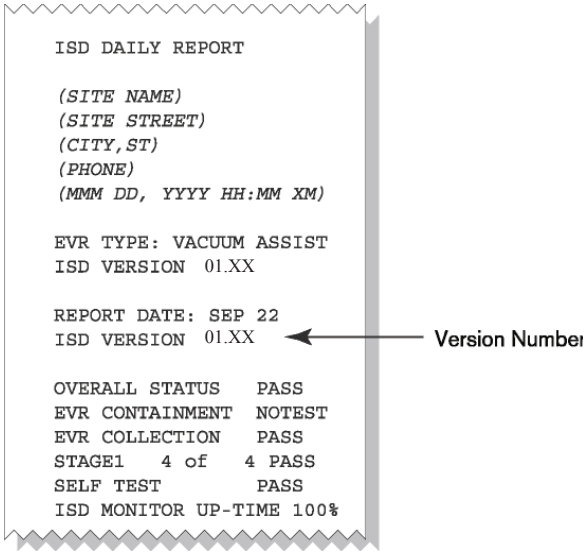

FIGURE 2-ISD-VR-2
Standard TLS Console

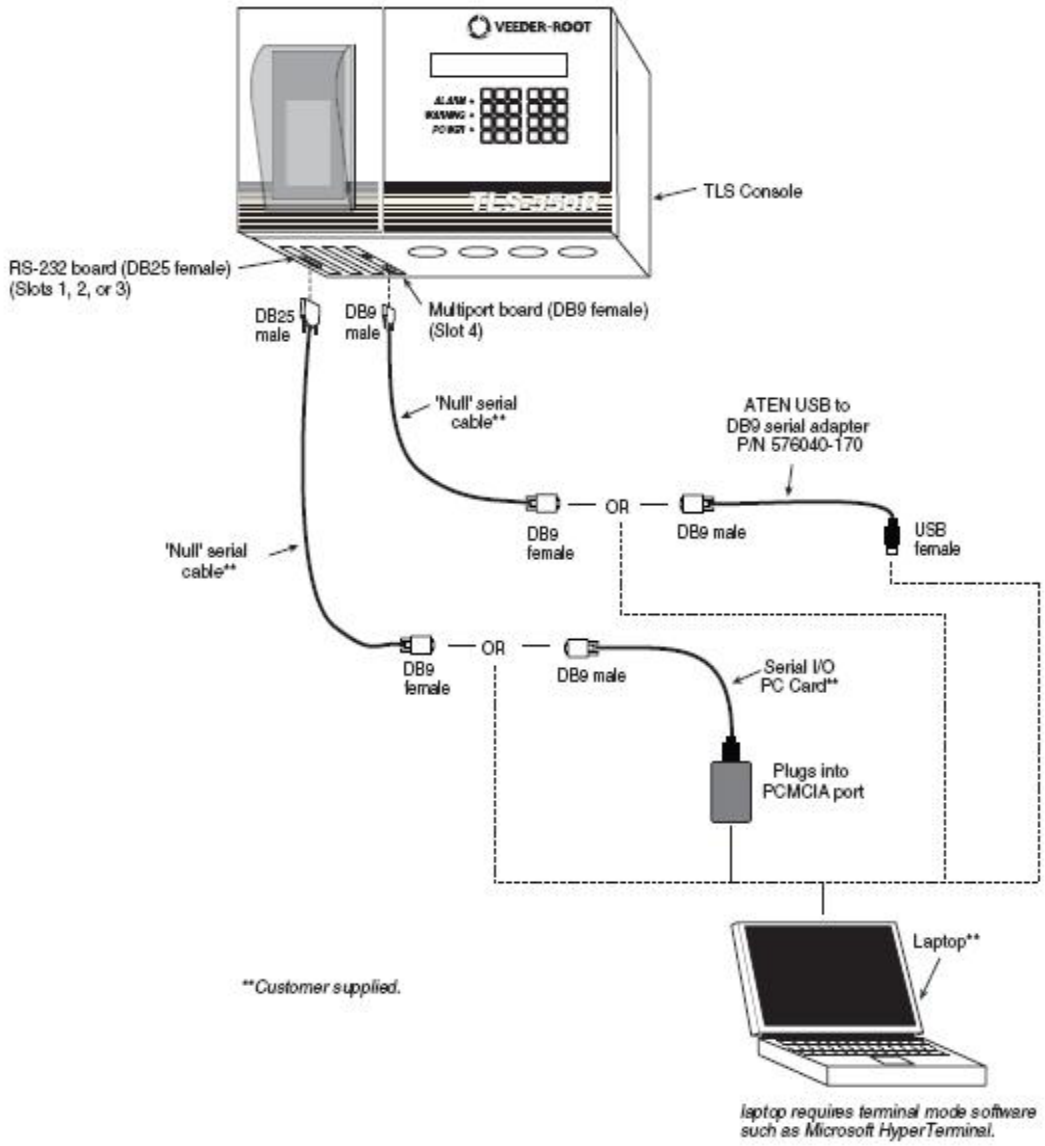

FIGURE 2-ISD-VR-3
Vapor Flow Meter
Veeder-Root 331847-XXX

FIGURE 2-ISD-VR-4
Vapor Pressure Sensor

FIGURE 2-ISD-VR-4a
Wired Vapor Pressure Sensor
Veeder-Root 331946-001

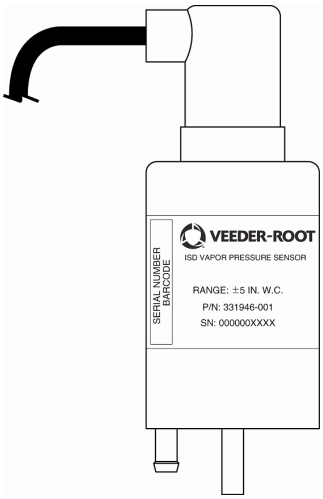

FIGURE 2-ISD-VR-4b
Low Powered Wireless Vapor Pressure Sensor
Veeder-Root 861190-201

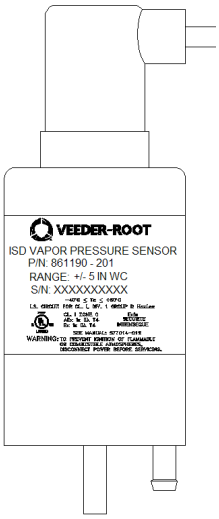

FIGURE 2-ISD-VR-4c
Dryer Tube (Optional)
Veeder-Root 330020-717

FIGURE 2-ISD-VR-5
Veeder-Root
Dispenser Interface Module (DIM)

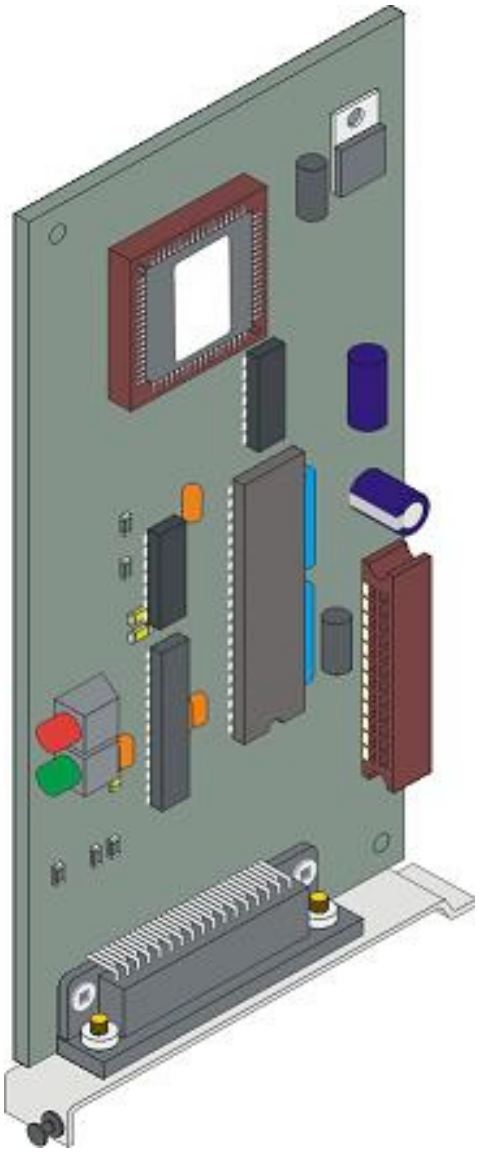

FIGURE 2-ISD-VR-6
Tank Inventory Probe Sensor

FIGURE 2-ISD-VR-7
Typical Installation of the Veeder-Root Vapor Pressure Sensor & Vapor Flow Sensor

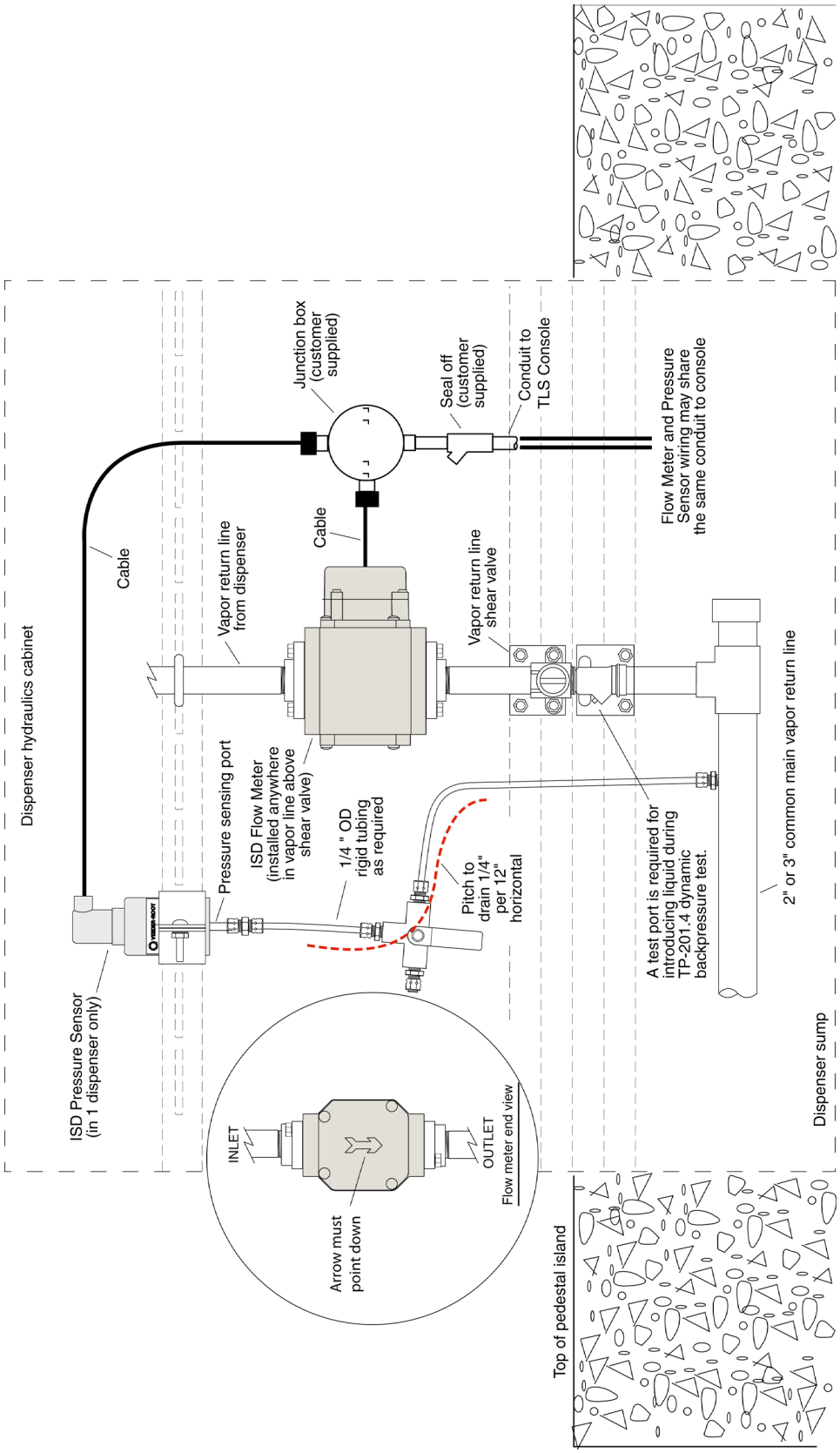

FIGURE 2-ISD-VR-8
Typical Installation of the Veeder-Root Vapor Pressure Sensor and Vapor Flow Sensor

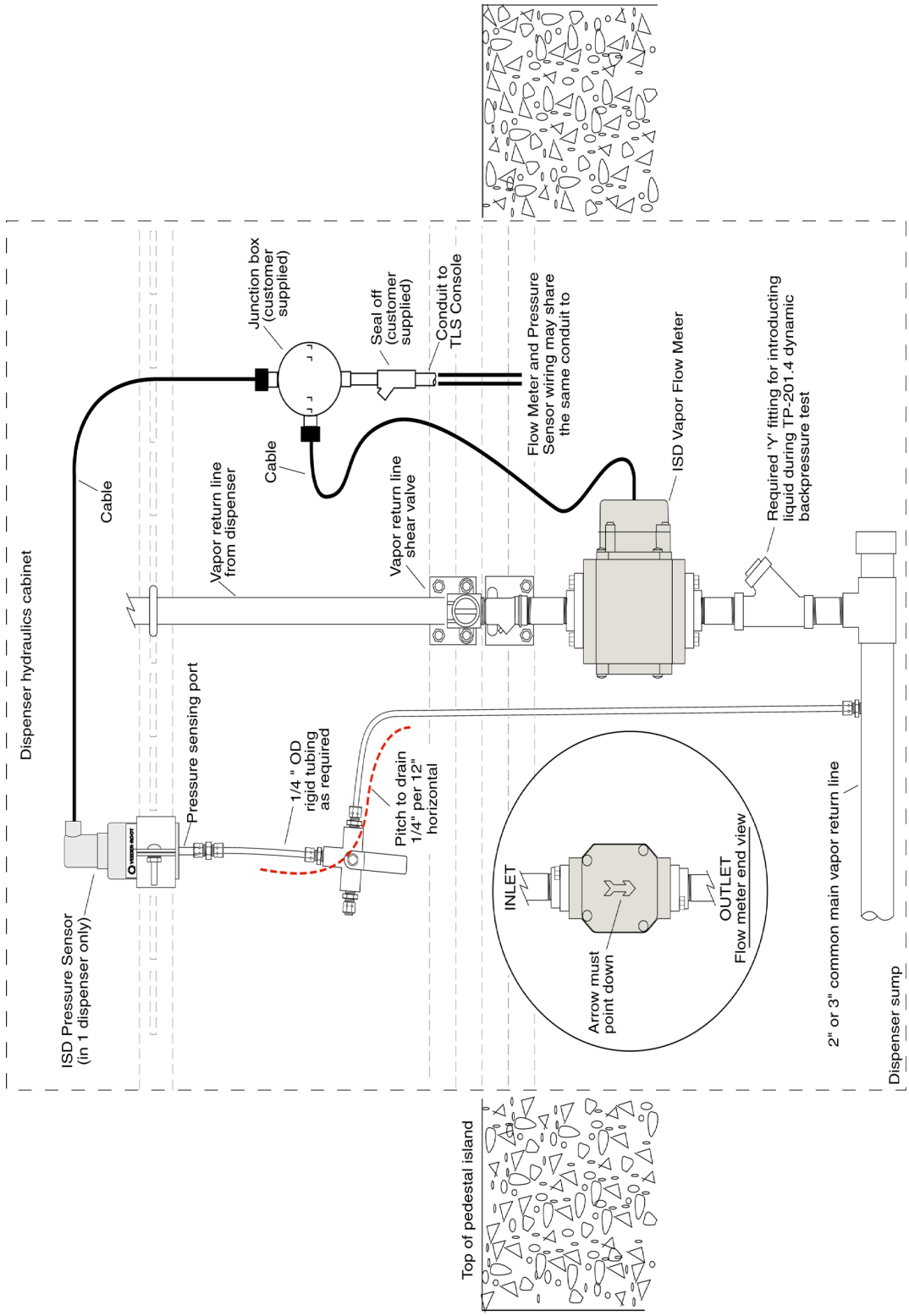

FIGURE 2-ISD-VR-9
Typical Installation of the Veeder-Root Vapor Pressure Sensor on a vapor vent stack

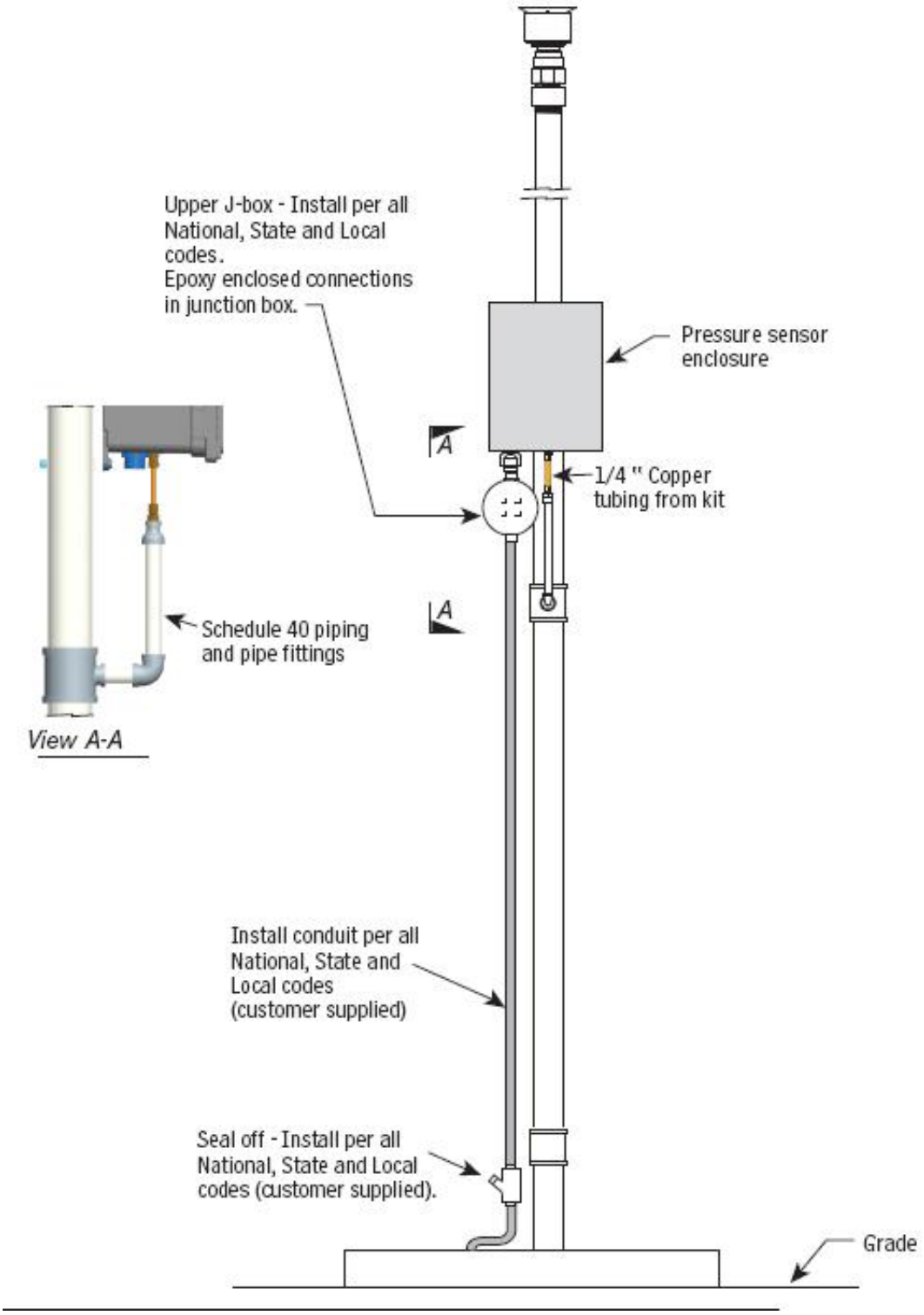

FIGURE 2-ISD-VR-10
Wireless Components for Veeder-Root ISD

RF Receiver-2

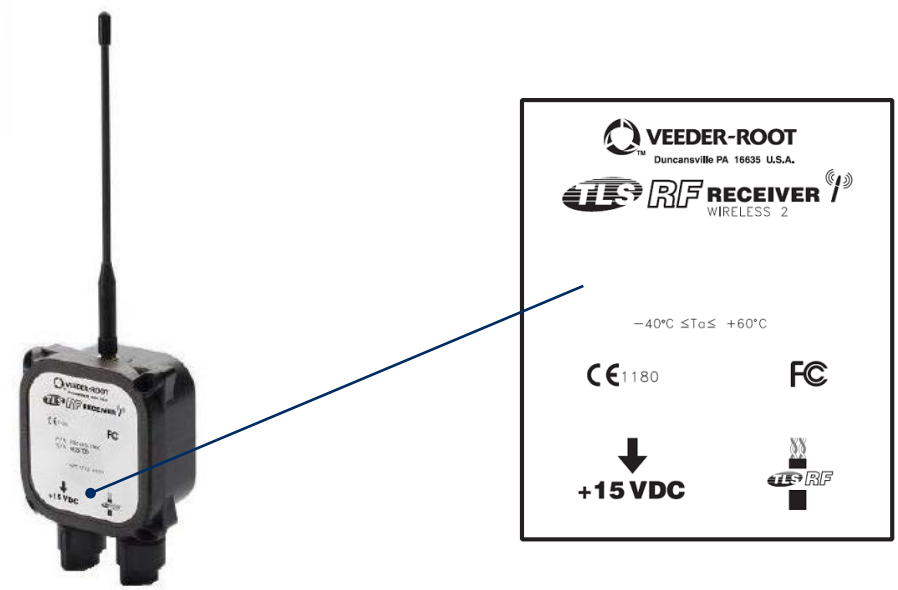

RF Repeater-2

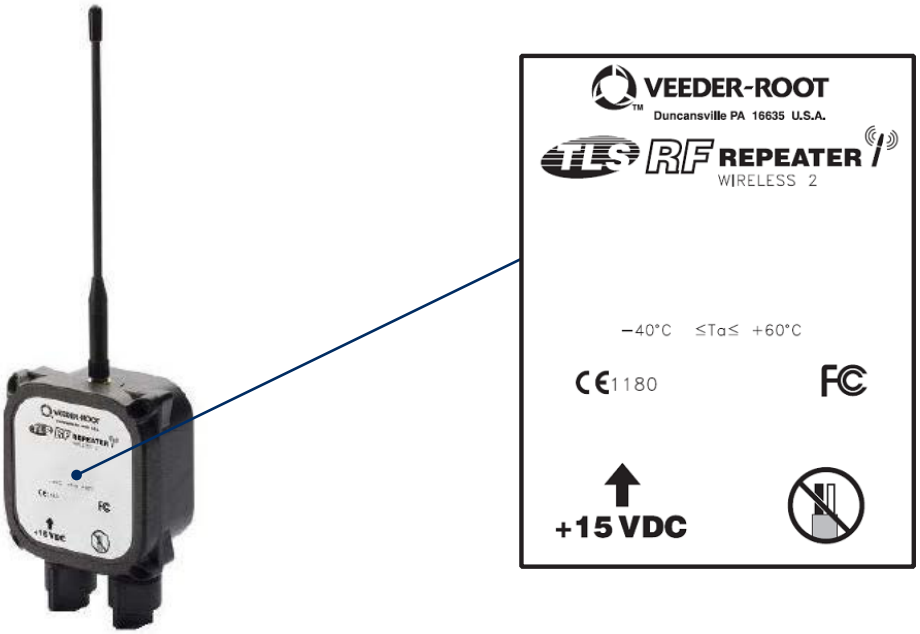

FIGURE 2-ISD-VR-10 (continue)
Wireless Components for Veeder-Root ISD

RF Transmitter-2

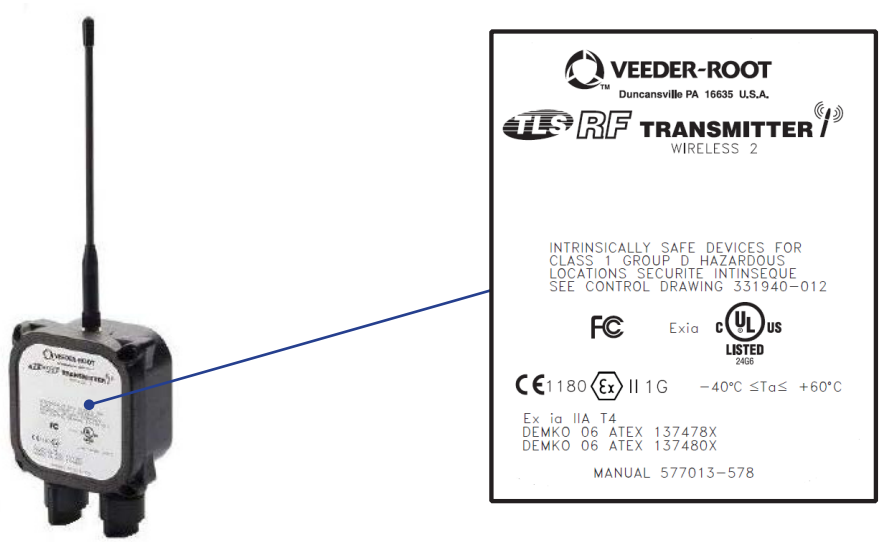

RF Battery Pack

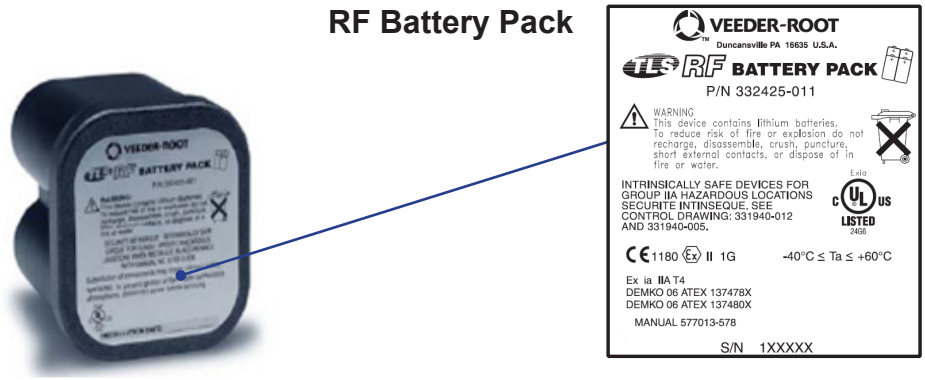

TLS RF Console-2

FIGURE 2-ISD-VR-11
Typical Installation of the Veeder-Root Vapor Flow Meter with VFM Transmitter in Dispenser

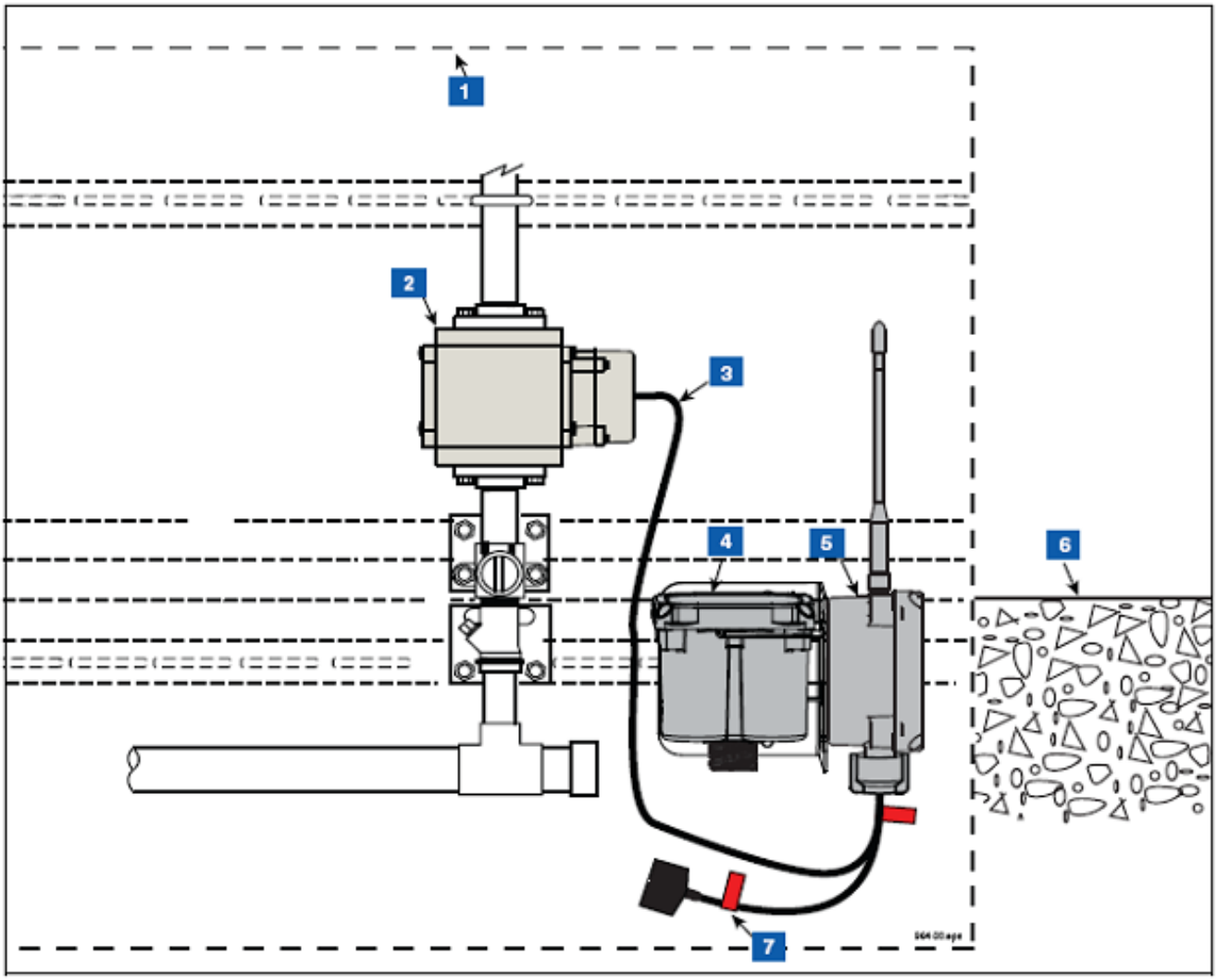

	Legend for Numbers Boxes in Figure 2-ISD-VR-11		
1.	Base of Dispenser cabinet VFM Transmitter	5.	Transmitter
2.	VFM	6.	Top of Dispenser Pedestal
3.	VFM cable	7.	Battery caution label attached to battery cable (2 places)
4.	Battery Pack		

FIGURE 2-ISD-VR-12
Overview of Veeder-Root Wireless Vapor Pressure Sensor Vent Stack Installation

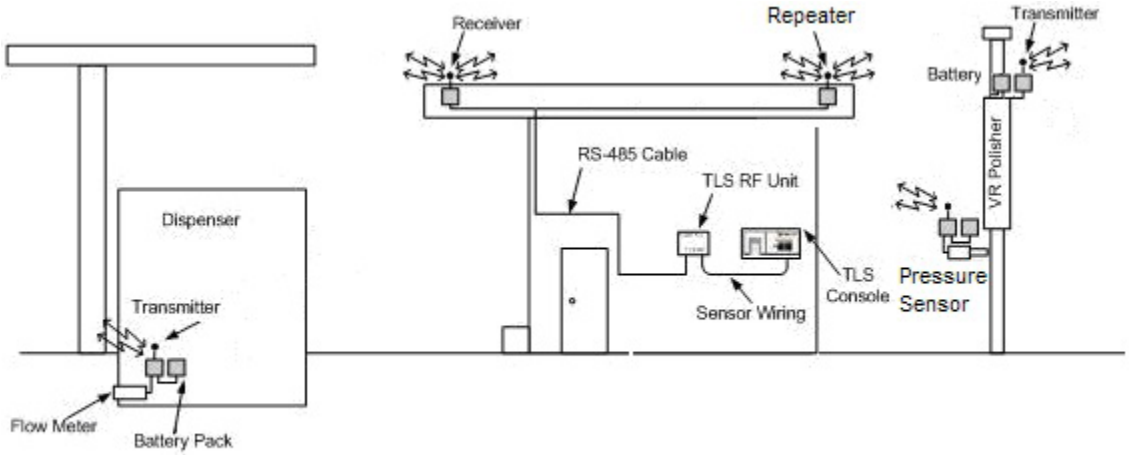

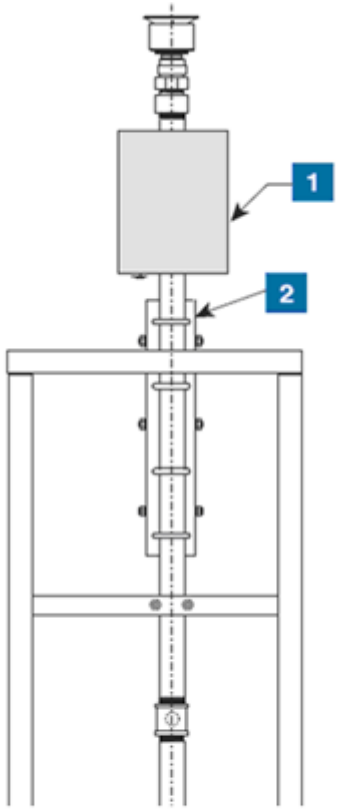

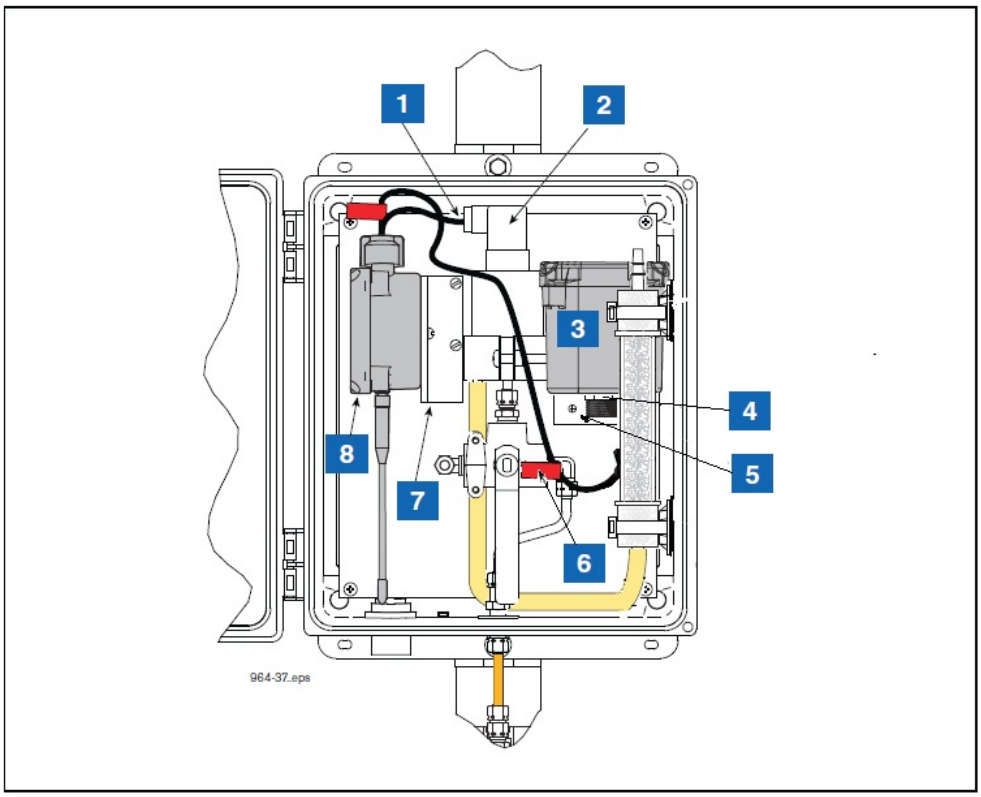

Example VRPS transmitter/battery pack installation in vent stack enclosure

1. CCVP transmitter/battery enclosure on vent stack
2. CCVP support bracket

LEGEND FOR NUMBERED BOXES	
1. VRPS cable	5. Attach Battery L bracket using two #10 taptite screws
2. VRPS	6. Battery caution label attached to battery cable (2 places)
3. Battery pack	7. Attach Transmitter L bracket using two #10 taptite screws
4. Thin hex nut	8. Transmitter

SECTION II - In-Station Diagnostics Systems

Option 2 - INCON Vapor Recovery Monitoring (VRM) System Specifications

Console & VRM Software Version Number

The ISD audible alarms shall be installed at a location that is most likely to be heard by the station attendant during normal station operation (e.g., cash register). The console shall be installed in a location that allows the Ethernet or RS232 port (COMM 1) to be easily accessible, and if applicable, per district requirements, for use at anytime. A vacant RS232 serial port (COMM 1) shall always be available to electronically download reports.

The presence of VRM and the VRM software version number can be verified on the Console touchscreen screen by pressing the VRM Icon key or by printing a VRM Daily or Monthly Report. See **Figure 2-ISD-INCON-1** for the verification instructions.

The Console must have a printer.

The Console is equipped with password security features which prohibit the ability to make changes to the system. Instructions and passwords shall be maintained on site in accordance with air district requirements and shall be available to the air district upon request.

Table 2 below provides a list of expiration dates for each ISD Software version.

TABLE 2
INCON ISD System Software Version Expiration Dates

Phase II EVR System Description	Software Version	Last Date Software May Remain In Use	Notes
Healy (Assist) VR-202 Series	Version 1.0.0 and 1.1.0 for Multi-Product (six pack) Dispensers	01/01/2014	Does not apply to GDFs equipped with unihose dispensers. Subject GDFs must upgrade to the certified software version (1.2.0 or later)
	Version 1.2.0 for Multi-Product (six pack) Dispensers	N/A	May Remain in Use at Existing Facilities Required for New Installations and Major Modifications

Operability Test Procedure

The INCON VRM operability test procedure provided in Exhibit 10, and in the VRM Operability Testing section of the **ARB Approved Installation, Operation and Maintenance Manual**, shall be used at GDF sites to determine the operability of the INCON VRM system to comply with applicable performance standards and performance specification in CP- 201. Testing the VRM equipment in accordance with this procedure will verify the proper selection, setup and operation of the Console sensors and interface modules.

Vapor Flow Meter

The INCON VRM system requires one Vapor Flow Meter per dispenser installed via the ARB Approved Vapor Flow Meter Manual 000-2144, Rev. A. The Vapor Flow Meter shall be installed into dispensers listed in Exhibit 1 of this Executive Order in accordance with the **ARB Approved Installation, Operation and Maintenance Manual**. The Vapor Flow Meter is an intrinsically safe sensor that is wired to the Console Probe Module orTS-DTU Module via a conduit dedicated to low-voltage sensors.
Figure 2-ISD-INCON-3 shows the Vapor Flow Meter. **Figure 2-ISD-INCON-5** shows the installation configuration.

Vapor Pressure Sensor

The INCON VRM system requires one Vapor Pressure Sensor per GDF installed into one of the dispensers located with the shortest run to the underground storage tanks (If a row of dispensers are equal distance from the tank pad, any dispenser can be used) in accordance with the **ARB Approved Installation, Operation and Maintenance Manual**. The Vapor Pressure Sensor shall be installed into dispensers listed in Exhibit 1 of this Executive Order. The Vapor Pressure Sensor is an intrinsically safe sensor that is wired to the Console's 4-20mA Module or a TS-DTU Module via a conduit dedicated to low-voltage sensors. **Figure 2-ISD-INCON-4** shows a Vapor Pressure Sensor illustration. **Figure 2-ISD-INCON-6** shows the installation configuration.

Dispenser Interface Module (DIM)

Existing Dispenser Interface Modules or DIM communication cards are used to interface to the dispenser Point Of Sale (POS) or controller system to gather fuel transaction data. The ISD Operability Test Procedure provided in Exhibit 10 and in the **ARB Approved Install, Operators, and Maintenance Manual** can be used to verify the proper selection and setup of the Dispenser Interface Module.

Data Transfer Unit

The optional Data Transfer Unit can be installed as a replacement for underground wire and conduit for both the Vapor Flow Meter and Vapor Pressure Sensor. The TS-DTU must be wired per the INCON Data Transfer Unit Dispenser Retrofit Manual 000-2146, Rev. B of the **ARB Approved Installation, Operation and Maintenance Manual.** A minimum of two units are required when installing DTUs, one in the GDF and one in a dispenser. A single site can mix and match between dedicated cables and DTU installation methods. See Figure 2-21.

Shutdown Control

The Console must be wired per the INCON VRM Install, Operators, and Maintenance Manual 000-2058, Rev. E of the **ARB Approved Installation, Operation and Maintenance Manual** such that it shall automatically prohibit the dispensing of fuel through shutdown of individual dispensers during a CP-201 ISD failure alarm.

Console Modules

The VRM Operability Test Procedure in Exhibit 10 and in the INCON VRM Install, Operators, and Maintenance Manual 000-2058, Rev E of the **ARB Approved Installation, Operation, and Maintenance Manual** shall be used to verify the proper selection and setup of the Console Modules.

Training Program

All INCON contractors must successfully complete the applicable Franklin Fueling Systems training program before they can install, startup, and service INCON Console equipment. Contractors must have up-to-date Level 1 & 2 certifications to install and startup the TS Console. Contractors must have an up-to-date Level 5 certification to install, startup and service the VRM system. The schedule, fee and registration information for the Authorized Service Contractor (ASC) training program can be found at http://techlab.franklinfueling.com.

A list of certified contractors with current console and VRM training will be available at the Franklin Fueling web page,
http://techlab.franklinfueling.com/mod/resource/view.php?id=64.

Maintenance

The console, including interface modules, do not require scheduled maintenance. The VRM System uses a Self-Test Monitoring feature that is designed to verify proper selection, setup and operation of the console and sensors. There is no recommended maintenance, inspection nor calibration for the Vapor Flow Meter or the Vapor Pressure Sensor. Servicing should be performed in response to warning or alarm conditions.

FIGURE 2-ISD-INCON-1
Finding The INCON VRM Version Number

Version number on the LCD:

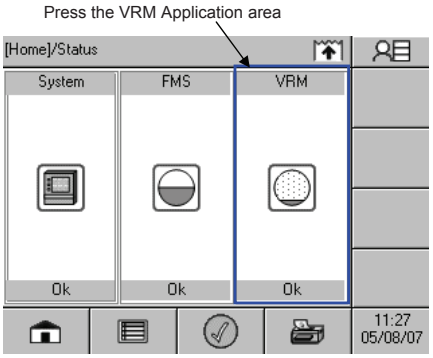

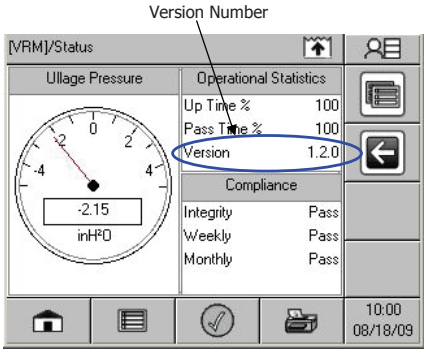

Version number on the VRM Daily Report or Monthly Report:

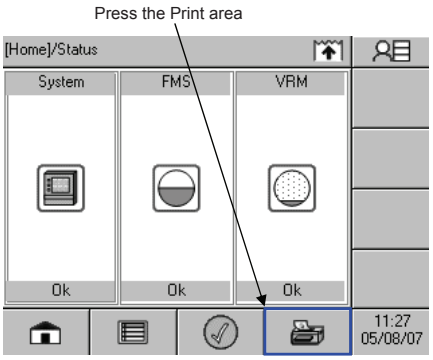

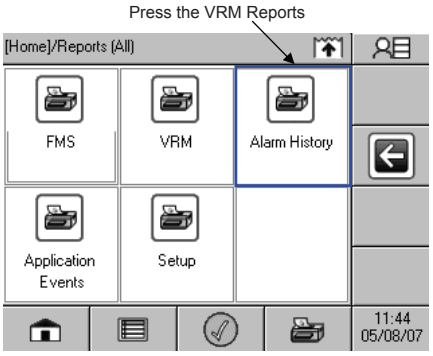

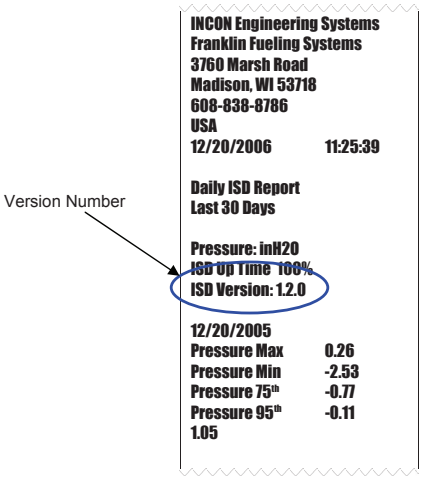

FIGURE 2-ISD-INCON-2
Standard Tank Sentinel Console

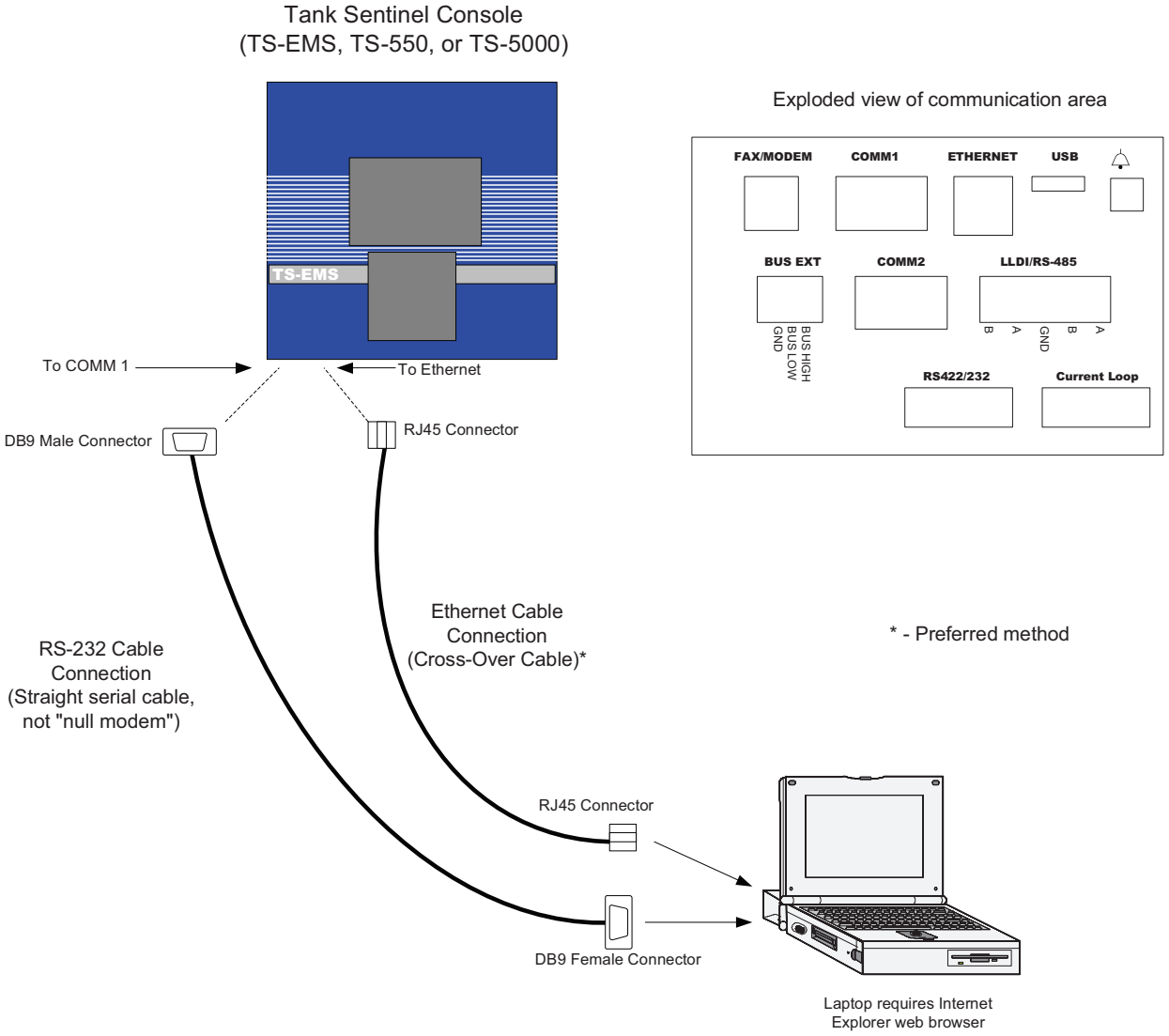

FIGURE 2-ISD-INCON-3
Vapor Flow Meter
INCON TS-VFM

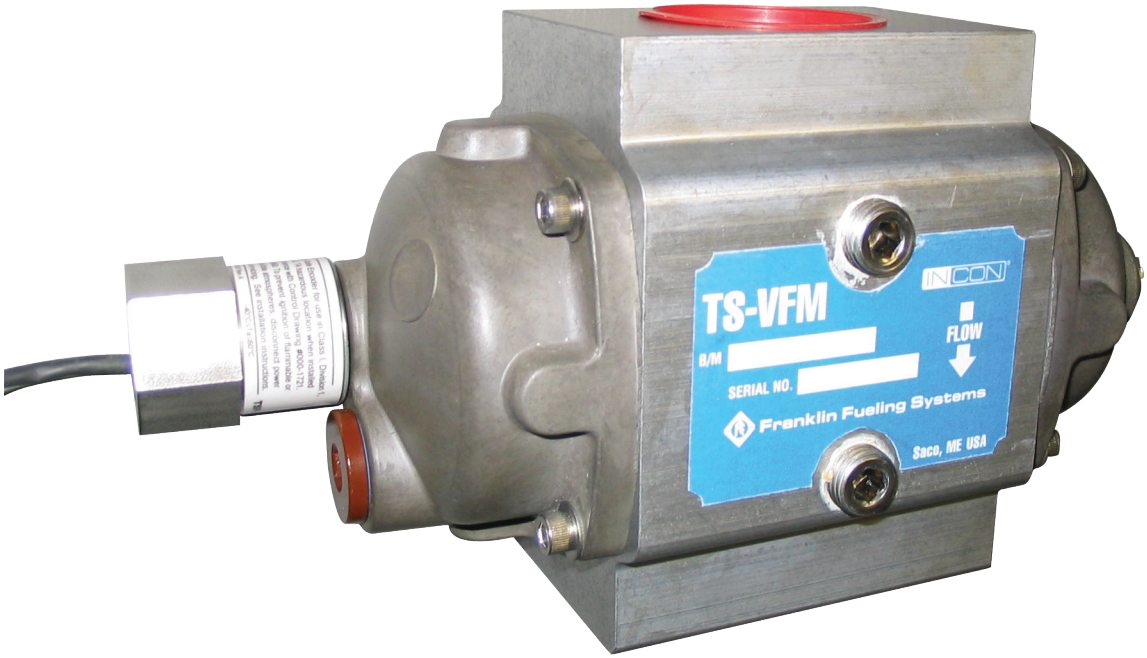

FIGURE 2-ISD-INCON-4
Vapor Pressure Sensor
INCON TS-VPS

FIGURE 2-ISD-INCON-5
Typical Installation of the INCON Vapor Flow Meter

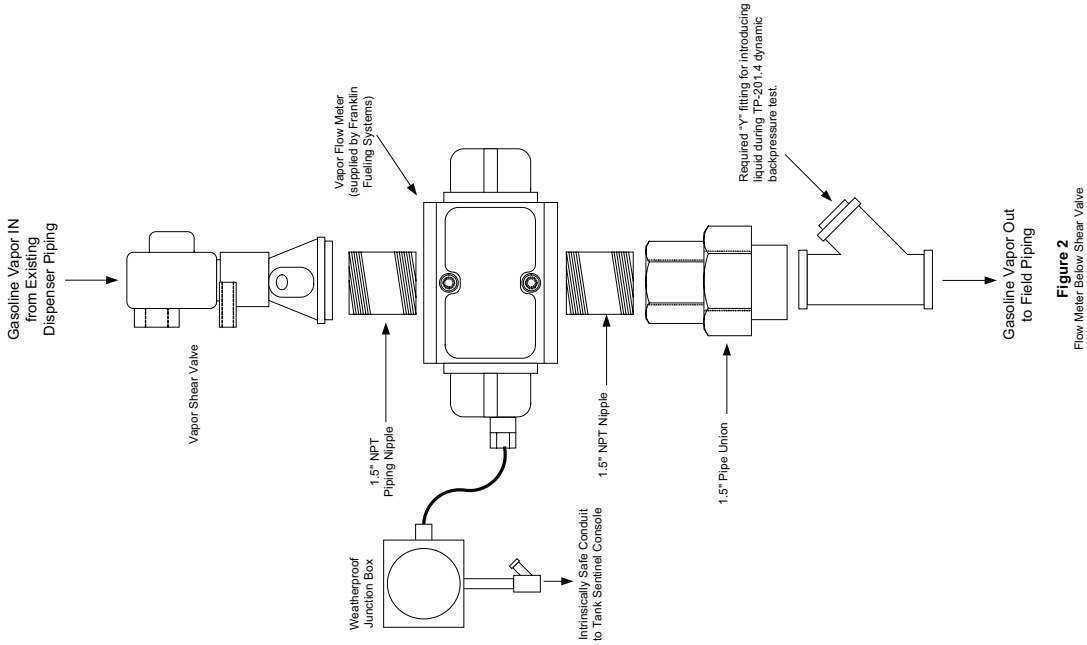

Figure 2
Flow Meter Below Shear Valve

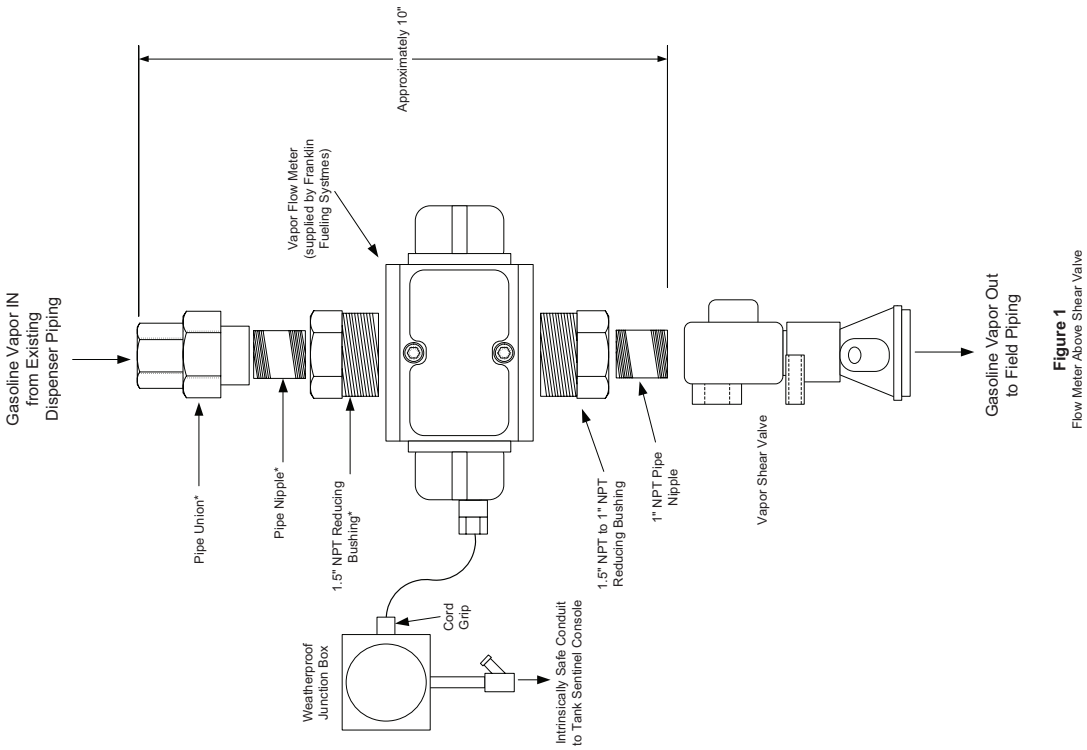

Figure 1
Flow Meter Above Shear Valve

FIGURE 2-ISD-INCON-6
Typical Installation of the INCON Vapor Pressure Sensor

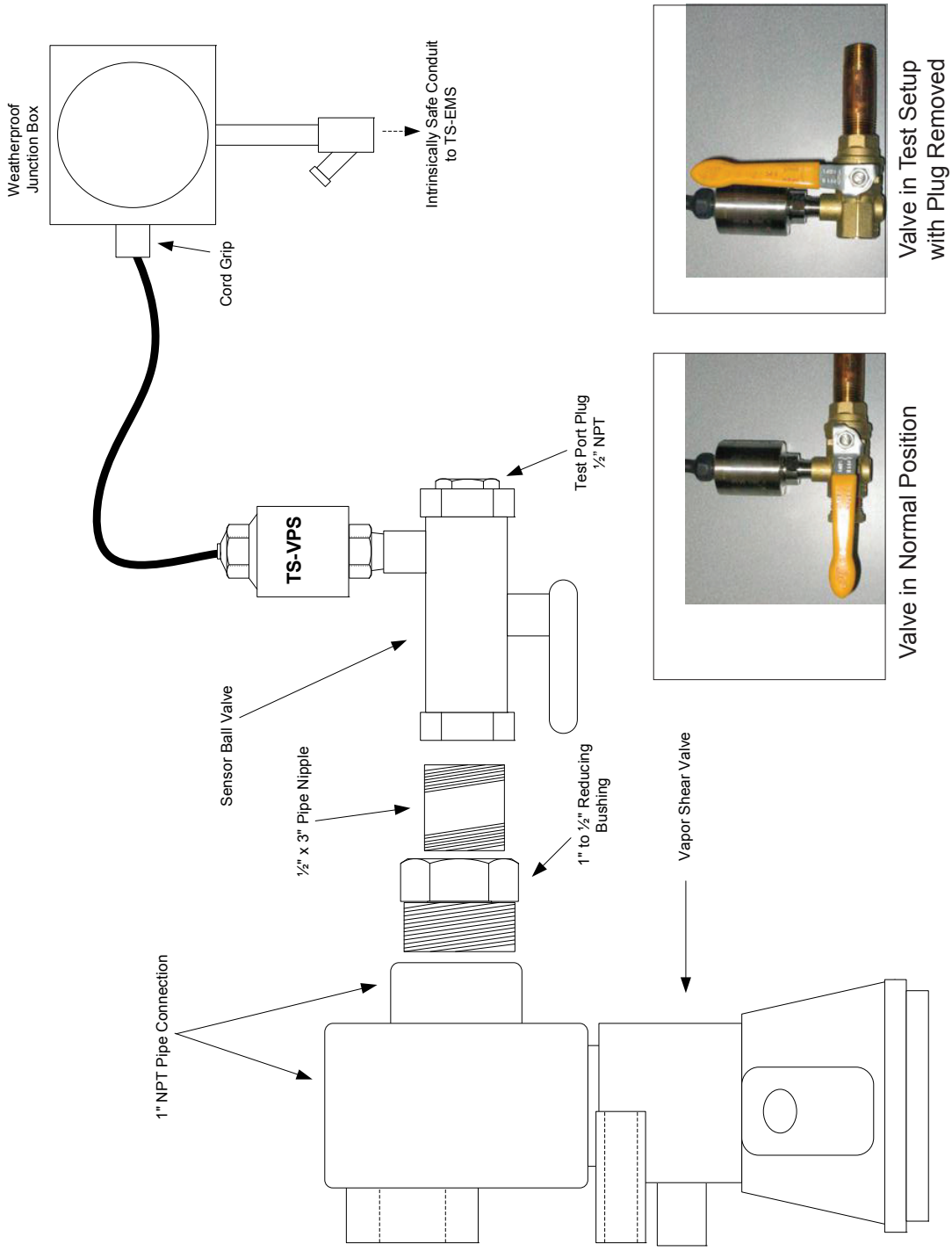

FIGURE 2-ISD-INCON-7
Data transfer Unit