Manual No: **577013-964** ● Revision: **F**

# TLS RF Wireless 2 System (W2)

## Installation and Maintenance Guide

VEEDER-ROOT

# Notice

Veeder-Root makes no warranty of any kind with regard to this publication, including, but not limited to, the implied warranties of merchantability and fitness for a particular purpose.

Veeder-Root shall not be liable for errors contained herein or for incidental or consequential damages in connection with the furnishing, performance, or use of this publication.

Veeder-Root reserves the right to change system options or features, or the information contained in this publication as approved by ARB.

This publication contains proprietary information which is protected by copyright. All rights reserved. No part of this publication may be modified or translated to another language without the prior written consent of Veeder-Root.

Contact TLS Systems Technical Support for additional troubleshooting information at 800-323-1799.

### DAMAGE CLAIMS / LOST EQUIPMENT

Thoroughly examine all components and units as soon as they are received. If any cartons are damaged or missing, write a complete and detailed description of the damage or shortage on the face of the freight bill. The carrier's agent must verify the inspection and sign the description. Refuse only the damaged product, not the entire shipment.

Veeder-Root must be notified of any damages and/or shortages within 30 days of receipt of the shipment, as stated in our Terms and Conditions.

### VEEDER-ROOT'S PREFERRED CARRIER

1. Contact Veeder-Root Customer Service at 800-873-3313 with the specific part numbers and quantities that were missing or received damaged.
2. Fax signed Bill of Lading (BOL) to Veeder-Root Customer Service at 800-234-5350.
3. Veeder-Root will file the claim with the carrier and replace the damaged/missing product at no charge to the customer. Customer Service will work with production facility to have the replacement product shipped as soon as possible.

### CUSTOMER'S PREFERRED CARRIER

1. It is the customer's responsibility to file a claim with their carrier.
2. Customer may submit a replacement purchase order. Customer is responsible for all charges and freight associated with replacement order. Customer Service will work with production facility to have the replacement product shipped as soon as possible.
3. If "lost" equipment is delivered at a later date and is not needed, Veeder-Root will allow a Return to Stock without a restocking fee.
4. Veeder-Root will NOT be responsible for any compensation when a customer chooses their own carrier.

### FCC INFORMATION

This equipment complies with the requirements in Part 15 of the FCC rules for a Class A computing device. Operation of this equipment in a residential area may cause unacceptable interference to radio and TV reception requiring the operator to take whatever steps are necessary to correct the interference.

### RETURN SHIPPING

For the parts return procedure, please follow the appropriate instructions in the "General Returned Goods Policy" pages in the "Policies and Literature" section of the Veeder-Root **North American Environmental Products** price list. Veeder-Root will not accept any return product without a Return Goods Authorization (RGA) number clearly printed on the outside of the package.

### FOR INSTALLATIONS IN THE STATE OF CALIFORNIA

Please refer to the California Air Resources Board Vapor Recovery Certification Phase II EVR Executive Order web site (www.arb.ca.gov/vapor/eo-evrphaseII.htm) for the latest manual revisions pertaining to Executive Order VR202 (Healy Phase II EVR System Including ISD System), VR 203 (VST Phase II EVR System) and VR 204 (VST Phase II EVR System Including ISD System).

©Veeder-Root 2013. All rights reserved.

*Table of Contents*


## Introduction
Procedures Contained Within This Manual ....2
Contractor Certification Requirements ....2
RF Transmitter Considerations ....2
Related Documents ....3
Product Marking Information ....3
Related Documents ....3
Safety Warnings ....5
Safety Symbols ....5
General Precautions ....6
General Precautions ....6
Special Tools Required ....6
National Electrical Code Compliance ....6
TLS RF-To-TLS Console Wiring ....6
TLS RF AC Power Wiring ....7
TLS RF Wireless System Site Layout ....8

## Equipment Dimensions ....9

## Pre-Installation Component Setup and Functional Check ....11

## TLS RF Installation
Selecting A Location ....14
Mounting the TLS RF ....14
Wiring the TLS RF ....14

## ISD Component Installation
Vapor Flow Meter Installation - Dispenser ....22
Vapor Return Pressure Sensor Installation ....24
Vent Stack Installation Example ....24
Connecting Cables To The Transmitter ....27
Receiver Installation ....29
Repeater Installation ....32

## Network Setup
Hardware Overview ....34
Identifying Devices in the TLS RF Wireless Site Network ....35
Entering Device Numbers for the Site Network ....35
Transmitter Device Number ....35
TLS RF Device Number ....36
Entering the Site ID Number ....36
Site Startup Procedure ....37
Initial TLS Console Setup Procedure ....37

## Diagnostics
Alarms ....38
Battery Diagnostics ....38
Wireless Sensor Diagnostic Menu (TLS-350 Consoles) ....38

## Appendix A: Regulatory Information
Federal Communications Commission Notice ....1
MODIFICATIONS ....1
CABLES ....1
Canadian Notice ....2

AVIS CANADIEN ..... 2
Battery Warning ..... 2
Wireless Notices ..... 2
U.S. Regulatory Wireless Notice ..... 2
Canadian Regulatory Wireless Notice ..... 2
System Specifications ..... 2

**Appendix B: Device DIP Switch Settings**

TLS RF Number Settings ..... 1
Transmitter/Receiver/Repeater DIP Switch Settings ..... 2

**Appendix C: Lithium Battery Safety Data**

Lithium Battery Disposal Considerations ..... 1

# Figures

Figure 1. Example TLS RF Wireless System Site Layout ..... 8
Figure 2. TLS RF Dimensions And Designated Conduit Knockouts ..... 9
Figure 3. Wireless Component Dimensions ..... 10
Figure 4. Connecting Wiring To Device Terminal Blocks ..... 11
Figure 5. Wiring The Battery Cable To The Transmitter ..... 12
Figure 6. Wiring AC Power To The TLS RF ..... 15
Figure 7. Wiring Receiver To The TLS RF ..... 16
Figure 8. Connecting RS-485 Wiring ..... 17
Figure 9. Power Connections To A Daisy Chained TLS RFs ..... 18
Figure 10. RS-485 Cable Connections When Daisy Chaining Two TLS RFs ..... 19
Figure 11. Wiring Data Outputs from TLS RF to TLS Console ..... 20
Figure 12. TLS RF Diagnostic LEDs And Switch Locations ..... 21
Figure 13. Attaching Transmitter To Battery Support Bracket ..... 22
Figure 14. Example VFM Transmitter Installation In Dispenser ..... 23
Figure 15. VRPS Mounted In Universal Enclosure On The Vent Stack ..... 25
Figure 16. Example VRPS Transmitter/battery Pack Installation In The Universal Enclosure ..... 26
Figure 17. Connecting Input Wiring To Transmitter Terminal Blocks ..... 27
Figure 18. Wiring The Transmitter ..... 28
Figure 19. Attaching Mounting Bracket To Receiver Or Repeater ..... 30
Figure 20. Wiring The Receiver ..... 31
Figure 21. Wiring The Repeater ..... 33
Figure 22. Example Site Network Diagram ..... 34
Figure 23. Device Battery Status In TLS-350 SmartSensor Diagnostic Menu ..... 39
Figure B-1. TLS-RF switch settings ..... 1
Figure B-2. DIP switch settings ..... 2
Figure B-3. S1: DIP switch positions 1-3 — (W2) All Devices ..... 3
Figure B-4. S1: DIP switch positions 4-8 — (W2) All Devices ..... 3
Figure B-5. S2: DIP switch positions 1-4 — (W2) Vapor Flow Meter ..... 4
Figure B-6. S2: DIP switch positions 5-8 — (W2) All Devices ..... 4

# Tables

Table 1. Wireless 2 Devices Per TLS Console ..... 1
Table 2. Wireless Component Kit Numbers ..... 1

# Introduction

This manual describes site preparation and installation procedures for the Veeder-Root TLS RF Wireless 2 System (W2) for Vapor Recovery monitoring. The TLS RF Wireless 2 System (W2) features two-way communication utilizing a client/server architecture resulting in improved data collection.

Veeder-Root strongly recommends the use of hard wiring for connecting Veeder-Root sensors to the TLS Console. Wired connections provide a robust communication link that is far superior to wireless networks.

A wide variety of devices can be integrated into the TLS RF Wireless 2 System (W2) network depending on the console(s) installed as shown in Table 1. Wireless component kit part numbers are shown in Table 2.

**Table 1. Wireless 2 Devices Per TLS Console**

| Consoles | Wireless Device<br>Vapor Flow Meter | Total Number of Wireless Devices per TLS console |
|---|---|---|
| 8470 TLS-350 Console | | 32 |
| 8482 TLS-350R Console | Up to 32 | 32 |

**Table 2. Wireless Component Kit Numbers**

| V-R Kit Order Number | V-R Component Number | | | | | |
|---|---|---|---|---|---|---|
| | RF Console 332242-002 | Transmitter 332235-016 | Repeater 332440-030 | Receiver 332440-029 | Battery Pack 332425-011 | Enclosure 330020-716 |
| 858090-203 | X | | X | X | | |
| 858090-204 | X | | X | X | | |
| 858090-205 | | X | | | X | |
| 330020-716 | | | | | | X |
| 330020-668 | X | | | | | |
| 330020-674 | | X | | | | |
| 330020-670 | | | X | | | |
| 330020-669 | | | | X | | |
| 330020-718 | | | | | X | |

## Procedures Contained Within This Manual

- Mounting the TLS RF and connecting power wiring.
- Installing Receiver, Repeater and Transmitters.
- Connecting the TLS RF to the TLS console.

After installing the TLS RF Wireless System devices, you must configure the sensors in the console following instructions contained in the TLS Console's System Setup Manual.

## Contractor Certification Requirements

| Veeder-Root Contractor Certification Requirements | Installer Certification[6] | ATG Technician Certification[7] | VR Vapor Products Certification[8] |
|---|---|---|---|
| Install[1] ISD | X | X | X |
| Install PMC | X | X | X |
| Install CCVP | X | X | X |
| Install Wireless ISD/PMC | X | X | X |
| Installation Checkout[2] | | X | X |
| ATG Startup[3] / Training[4] / Service[5] | | X | X |
| ISD Startup / Training / Service | | | X |
| PMC Startup / Training / Service | | | X |
| CCVP Startup / Training / Service | | | X |
| Wireless ISD/PMC Startup / Training / Service | | | X |
| Install Pressure Sensor (ATG) | X | X | X |
| Maintain Pressure Sensor (ATG) | | X | X |
| Calibrate Pressure Sensor (ATG) | | X | X |
| Clear ATG Pressure Sensor Alarm (ATG) | | X | X |
| Clear ISD/PMC Alarms (ISD/PMC) | | | X |

[1]Perform wiring and conduit touting; equipment mounting
[2]Inspect wiring and conduit routing; equipment mounting
[3]Turn power on, program and test the systems
[4]Provide supervised field experience in service techniques and operations
[5]Troubleshoot and provide routing maintenance
[6]UST Monitoring Systems – Installer (Level 1)
[7]Certified UST Monitoring Technician
[8]VR Vapor Products

**Warranty Registrations** may only be submitted by selected Distributors. Certified installers are required to provide the GDF operator with the completed Equipment Warranty Notice, form 577013-868, for their records.

## RF Transmitter Considerations

Installation of this equipment in wet or below grade locations requires that the installer take steps to ensure that the equipment is mounted above the maximum water level.

**CAUTION! – The Transmitter will not function properly in water. Also, submersion of the Transmitter in water can cause permanent damage to the internal electronics.**

**Wireless 2 devices will not function properly if certain conditions arise such as, but not limited to, the following:**

- **Ambient Interference – Due to site layout or vehicles parked in the RF transmission path. For example, CSLD will not function if the transmission path is blocked for more than a few minutes.**
- **Improper equipment installation – Keep objects from improperly coming in contact with the antenna. Follow these installation instructions and mount the transmitter in a fixed position to**

**ensure maximum RF connectivity. Antenna orientation is significant in achieving an optimal transmission path.**

- **Equipment Sump Parameters – Sumps intended for use with RF equipment must accommodate the worst case rainfall condition that could reasonably occur. The RF Transmitter and antenna are weatherproof but will not function properly underwater.**

TLS System performance will be degraded should any of the above conditions occur and is not covered under the Veeder-Root Product Warranty. Corrective actions to such conditions are the responsibility of the station-site owner. Veeder-Root is not liable for any event that is a result of an improper installation or use of this equipment.

It is important that installers have knowledge of all relevant procedures before installing a wireless system. Read and understand all manuals thoroughly. If you do not understand a procedure, contact a certified contractor or contact Veeder-Root. Each TLS Console has its own setup and installation manuals.

## Related Documents

| | |
|---|---|
| IOM 13 VR-203 and VR-204 or IOM 18 VR-202 | Vapor Pressure Sensor Installation Guide |
| IOM 15 VR-204 | ISD Balance Flow Meter Installation Guide |
| 576013-623 | TLS-3XX System Setup Manual |
| 331940-012 | TLS RF System Control Drawing |

## Product Marking Information

### RELATED DOCUMENTS

#### *Documents Required to Install Equipment*

This intrinsically safe apparatus is only for use as part of a Veeder-Root Automatic Tank Gauging System (ATG Console with probes and sensors). To install intrinsically safe apparatus, use the specific control drawing that appears on the nameplate of the applicable associated apparatus (ATG Console):

| Equipment | UL/cUL Control Drawing Document No. |
|---|---|
| **Associated Apparatus** | |
| TLS-450/8600 | 331940-008 |
| TLS-350, TLS-350R | 331940-011 |
| TLS-300 | 331940-013 |
| TLS-50 or TLS2 or TLS-IB | 331940-014 |
| TLS4/8601 | 331940-018 |
| TLS-XB/8603 | 331940-019 |
| **Intrinsically Safe Apparatus for Wireless Applications** | |
| Tank Gauge Accessories | 331940-012 |

The control drawings contain information related to the correct installation of the overall intrinsically Safe System. This includes information such as maximum number of apparatus, specific apparatus allowed in the system,

maximum cable lengths, references to codes, proper grounding and so on. Control drawings can be found on the accompanying Compact Disk (TECH DOCS CD) or on the internet at veeder.com under SUPPORT; VR TECHNICAL DOCUMENTS; DRAWINGS.

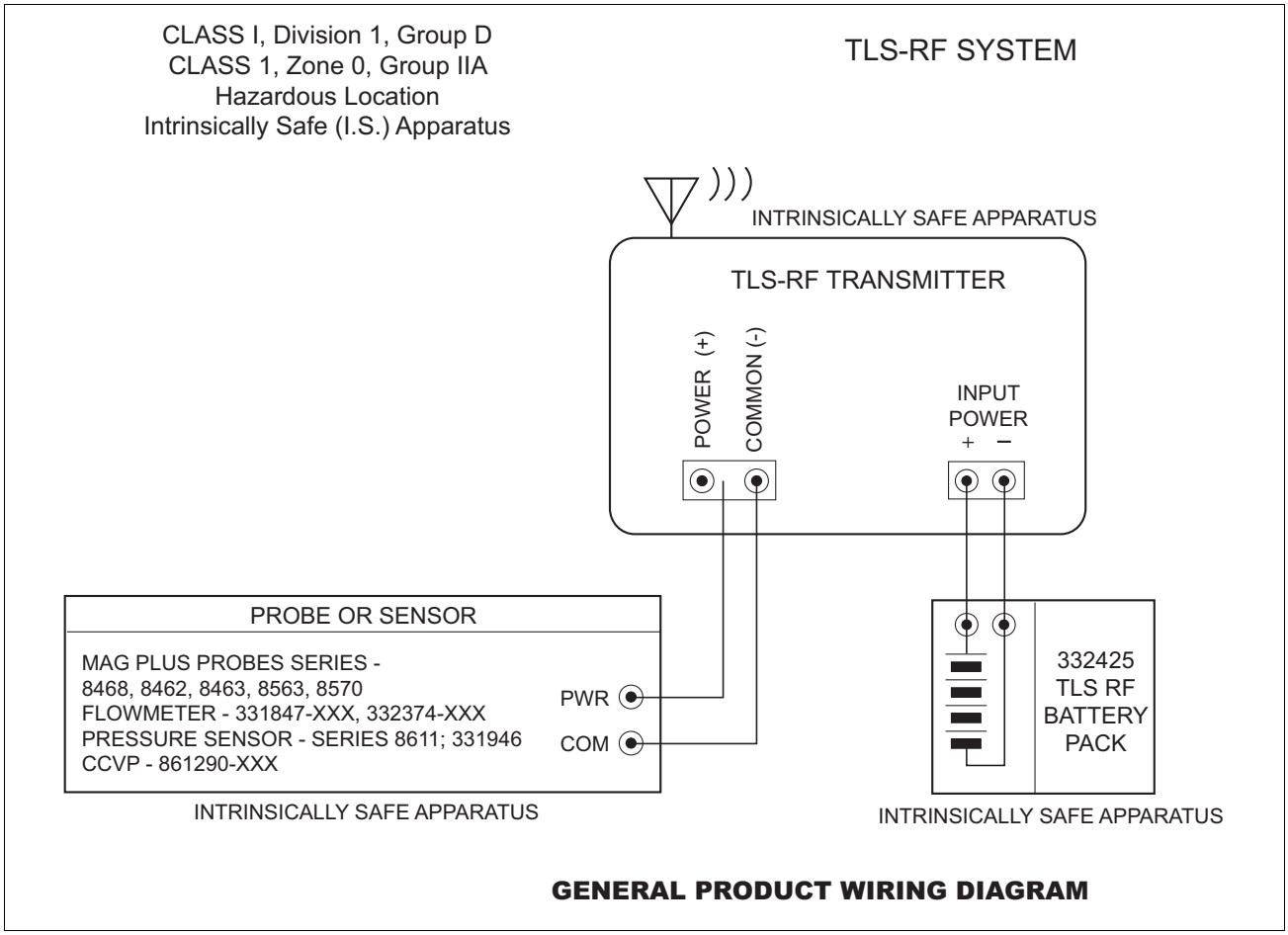


### *Product Label Contents*

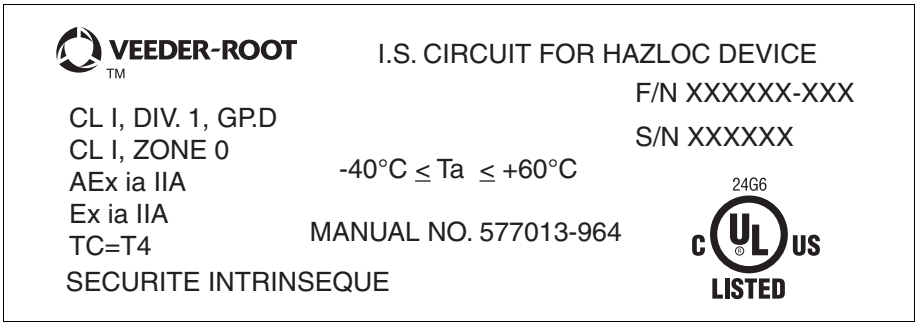

## Safety Warnings

To protect yourself and your equipment, observe the following warnings and important information:

**⚠ WARNING**

**This product is to be installed in systems operating near locations where highly combustible fuels or vapors may be present.**

**FAILURE TO COMPLY WITH THE FOLLOWING WARNINGS AND SAFETY PRECAUTIONS COULD CAUSE DAMAGE TO PROPERTY, ENVIRONMENT, RESULTING IN SERIOUS INJURY OR DEATH.**

1. **Read and follow all instructions in this manual, including all safety warnings to protect yourself and others from serious injury, explosion, or electrical shock.**
2. **Comply with all applicable codes including: the National Electrical Code; federal, state, and local codes; and other applicable safety codes.**
3. **To protect yourself and others from being struck by vehicles, block off your work area during installation or service.**
4. **Do not alter or modify any component or substitute components in this kit.**
5. **Warning! Substitution of components may impair intrinsic safety.**
6. **Field wiring to the Probe must not share a conduit with any non-intrinsically safe device's wiring.**
7. **Warning! To prevent ignition of flammable or combustible atmospheres, disconnect battery before servicing.**
8. **Materials used in the construction of this device contain aluminum. Care must be taken to avoid ignition hazards due to impact or friction.**
9. **Before installing or taking the unit into a hazardous area, earth the unit in a safe area to remove any static charge. Then immediately transport the unit to the installation site. Do not rub or clean the unit prior to installation. Cleaning is not required under normal service conditions. Do not rub or clean the unit after installation. If the unit is not fixed to a known earth point when installed, ensure that a separate earth connection is made to prevent the potential of a static discharge. When fitting or removing the unit, use of anti-static footwear or clothing is required.**

**NOTE** ***Failure to install this product in accordance with its instructions and warnings will result in voiding of all warranties with this product.***

## Safety Symbols

The following safety symbols may be used throughout this manual to alert you to important safety hazards and precautions.

| | | | |
|---|---|---|---|
| | **EXPLOSIVE**<br>Fuels and their vapors are extremely explosive if ignited. | | **FLAMMABLE**<br>Fuels and their vapors are extremely flammable. |
| | **ELECTRICITY**<br>High voltage exists in, and is supplied to, the device. A potential shock hazard exists. | | **TURN POWER OFF**<br>Live power to a device creates a potential shock hazard. Turn Off power to the device and associated accessories when servicing the unit. |

| | |
|---|---|
| **WARNING**<br>Heed the adjacent instructions to avoid damage to equipment, property, environment or personal injury. | **READ ALL RELATED MANUALS**<br>Knowledge of all related procedures before you begin work is important. Read and understand all manuals thoroughly. If you do not understand a procedure, ask someone who does. |
| **SAFETY BARRICADES**<br>Unauthorized people or vehicles in the work area are dangerous. Always use safety cones or barricades, safety tape, and your vehicle to block the work area. | |

## General Precautions

Retain and follow all product safety and operating instructions. Observe all warnings on the product and in the operating instructions. To reduce the risk of bodily injury, electric shock, fire, or damage to the equipment, observe the following precautions.

**FAILURE TO COMPLY WITH THE FOLLOWING WARNINGS AND SAFETY PRECAUTIONS COULD CAUSE DAMAGE TO PROPERTY, ENVIRONMENT, RESULTING IN SERIOUS INJURY OR DEATH.**

### GENERAL PRECAUTIONS

Heed service markings: Opening or removing the console cover may expose you to electric shock. Servicing of Veeder-Root equipment must be done by Veeder-Root authorized service contractors.

Use product with approved equipment: This product should be used only with Veeder-Root components identified as suitable for use with the TLS RF Wireless System.

Use the correct external power sources: This product should be operated only from the type of power sources indicated on the electrical ratings labels affixed to the components. If you are not sure of the type of power source required, consult your Veeder-Root authorized service contractor.

When not in use, a longer battery life can be achieved by keeping the battery pack in a cool, dry location where the temperature never exceeds 30°C or 86°F and does not go below 10° C or 50° F.

### SPECIAL TOOLS REQUIRED

- #15 Torx screwdriver
- Small blade screwdriver (maximum blade width 3/32”)
- Wire strippers

## National Electrical Code Compliance

The following information is for general reference and is not intended to replace recommended National Electric Code (NEC) procedures. It is important for the installer to understand that electrical equipment and wiring located in Class I, Division 1 and 2 installations shall comply with the latest appropriate articles found in the National Electric Code (NFPA 70) and the Code for Motor Fuel Dispensing Facilities and Repair Garages (NFPA 30A), or other local code such as the CEC, Canadian Electrical Code.

### TLS RF-TO-TLS CONSOLE WIRING

**Wire Type**
To ensure the best operating systems available, Veeder-Root REQUIRES the use of shielded cable.

**Wire Length**
Improper system operation could result in undetected potential environmental and health hazards if the TLS RF-to-TLS Console wire runs exceed 1000 feet. Wire runs must be less than 1000 feet to meet intrinsic safety requirements.

**Splices**
Veeder-Root recommends that a minimum number of splices are used in the wire run between the TLS RF and the TLS Console. Each splice degrades signal strength and could result in poor system performance.

**Wire Gauges - Color coded**
Shielded cable must be used in all installations. TLS RF-to-TLS Console wires must be #14 to #18 AWG stranded copper wire and installed as a Class 1 circuit.

**Alternate Method**
When approved by the local authority having jurisdiction, 22 AWG wire such as Belden 88761 may be suitable in installations with the following provisions:

- Wire run is less than 750 feet
- Capacitance does not exceed 100 pF/foot
- Inductance does not exceed 0.2 µH/foot

## TLS RF AC POWER WIRING

Wires carrying 120 or 240 Vac from the power panel to the TLS RF must be at least#14 AWG copper wire for line, neutral and chassis ground (3); and #12 AWG copper wire for barrier ground (1).

NOTE: Note: See page 32 for details of Repeater Power Wiring.

## TLS RF Wireless System Site Layout

Figure 1 illustrates an example TLS RF Wireless System installation. The Repeater component may be required if the system Receiver, mounted on building's outside wall, has difficulty receiving signals from any of the Transmitters. See page 32 for Repeater installation.

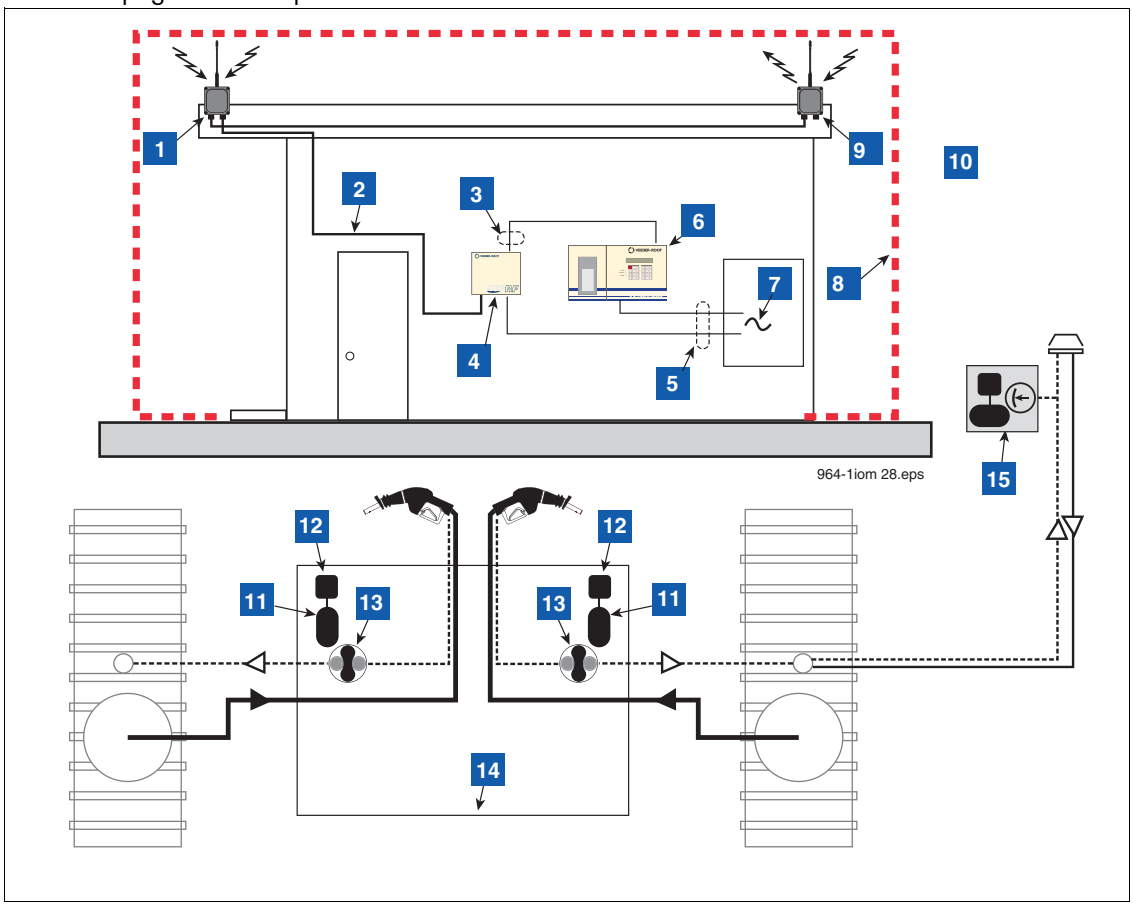


**Figure 1. Example TLS RF Wireless System Site Layout**

**LEGEND FOR NUMBERED BOXES IN Figure 1**

To be installed in accordance with the National Electrical Code, NFPA 70 and the Code for Motor Fuel Dispensing Facilities and Repair Garages (NFPA 30A), or other local codes such as the CEC, Canadian Electrical Code.

**WARNING! Substitution of components may impair intrinsic safety.**

Circuitry within the console barrier forms an intrinsically safe, energy-limited system. This system is intrinsically safe for use in a Class I, Group D hazardous location.

1. Receiver (1 per RF System)
2. RS-485 Cable (Belden #3107A or equiv.)
3. NOTE: Intrinsically safe wiring shall be installed in accordance with Article 504-20 of the NEC, ANSI/ NFPA 70. Max cable length 1000 ft. (304 m).W2 Receiver (1 per RF System)
4. TLS-RF
5. Conduit that enters power wiring knockout.
6. TLS console (Vm = 250 V)
7. 120 or 230 Vac from power panel
8. Non-hazardous area
9. Repeater (1 per RF System)
10. Hazardous area (Class I, Div. 1, Group D)
11. Transmitter
12. Battery pack
13. Vapor Flow meter
14. Dispenser sump
15. VPRS sensor (w/transmitter/battery in enclosure)

# Equipment Dimensions

Dimensions of the TLS RF are shown in Figure 2.

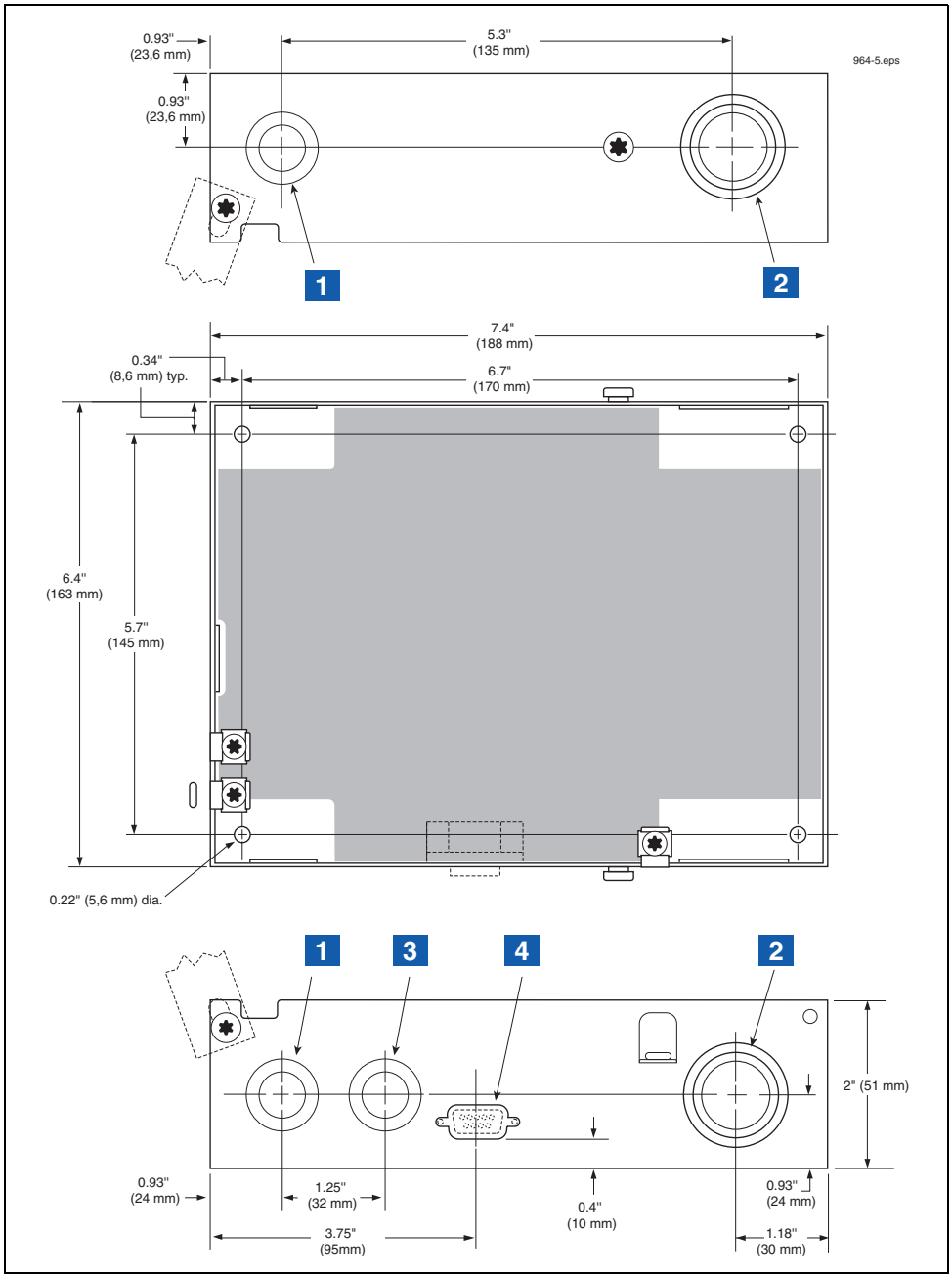


**Figure 2. TLS RF Dimensions And Designated Conduit Knockouts**

| LEGEND FOR NUMBERED BOXES IN Figure 2 | |
|---|---|
| 1. Designated power wiring knockouts | 3. RS-485 knockout |
| 2. Designated intrinsically-safe wiring knockouts | 4. RS-232 knockout |

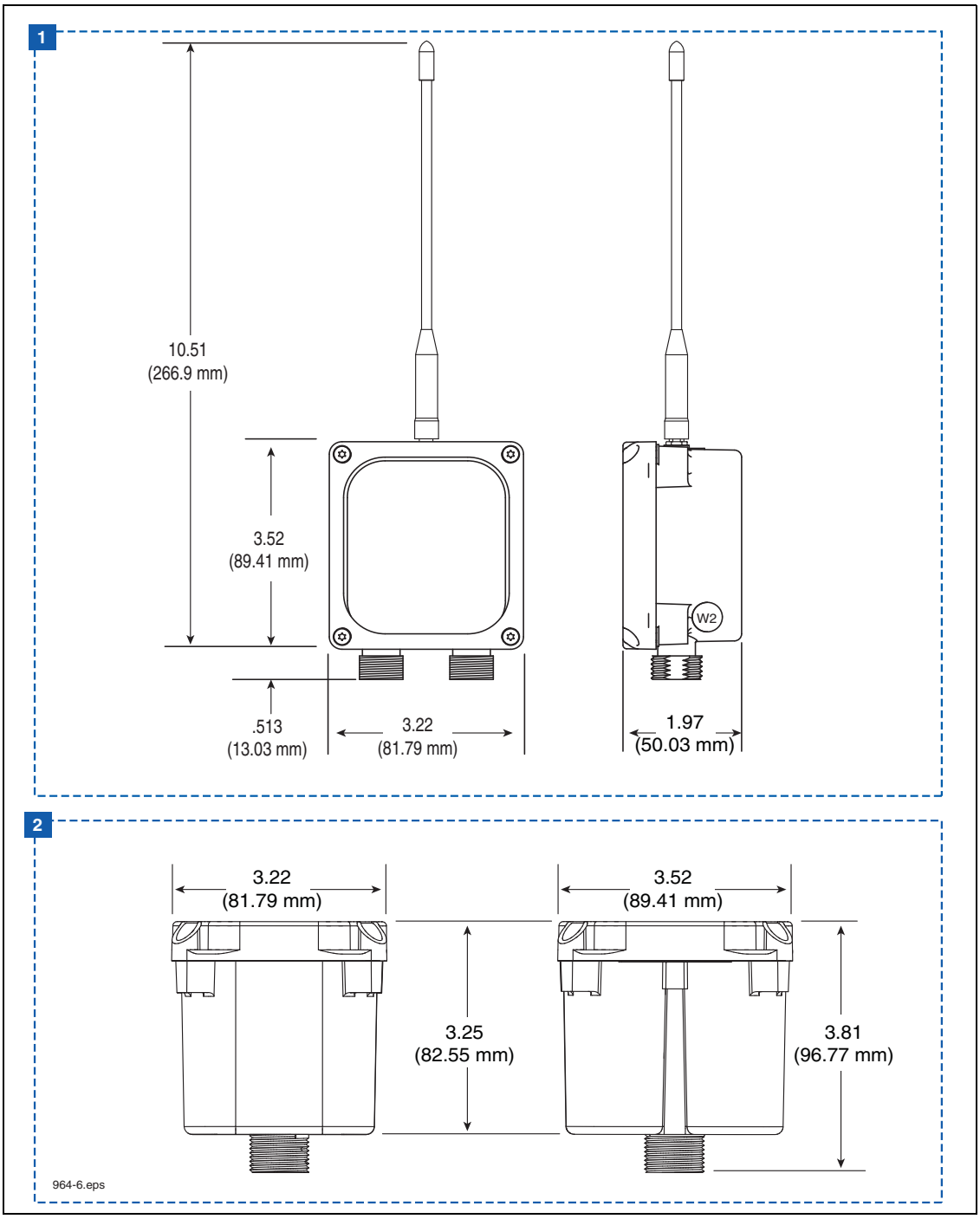


**Figure 3. Wireless Component Dimensions**

| LEGEND FOR NUMBERED BOXES IN Figure 3 | |
|---|---|
| 1. W2 Receiver, W2 Transmitter, and W2 Repeater dimensions | 2. Battery housing dimensions |

# Pre-Installation Component Setup and Functional Check

The steps below describe the process of verifying the Wireless System component functionality; listed steps are only for one TLS RF. If there are more than 8 Sensors installed at the site, refer to Appendix B on how to setup the DIP Switches for auxiliary TLS RF(s).

1. Remove all the hardware from their boxes; lay the TLS RF, Receiver, Repeater, and all the Transmitters on a table.
2. Set Site ID for the Receiver, Repeater, and all the Transmitters (refer toAppendix B on how to set up the Site ID). Typically the Site ID is set to 0 (default). **If there is a nearby wireless site, the Site IDs must be different.**
3. Set all Transmitter's Device Numbers and connect the battery cables to all the Transmitters. Label each Transmitter with its site ID.
   a. Using a #15 torx driver, remove the cover of the Transmitter.
   b. Remove the nut from the battery cable cord grip (right side cord grip) and slide it over the non-connector end of the battery cable.
   c. Make sure the battery/dc power cable is not connected to the battery pack or dc power source at this time. Push the battery cable through the battery cable cord grip bushing and into the Transmitter.
   d. Strip back the cable jacket and wires as shown in Figure 4.
   e. Connect the battery pack/dc power cable to the BATTERY terminal block (white to +IN and black to -IN) as shown in Figure 5.
   f. **Hand tighten both cable entry cord grip nuts to prevent water entry!**
   g. Replace the cover of the Transmitter, but do not tighten down cover screws at this time.

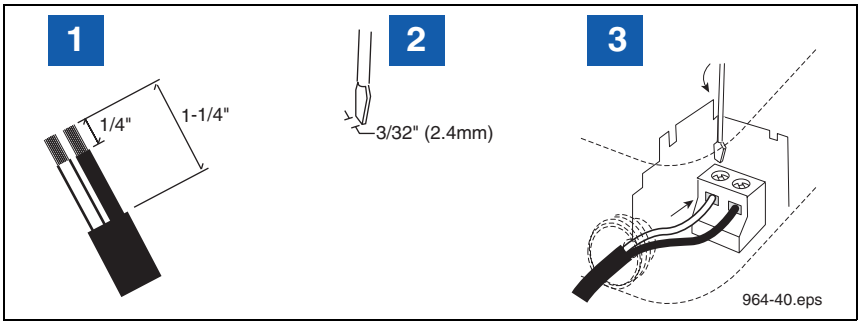


**Figure 4. Connecting Wiring To Device Terminal Blocks**

| LEGEND FOR NUMBERED BOXES IN Figure 4 | |
|---|---|
| 1. Strip back cable and wire jackets the amount shown. | 3. Both wires must be tight in terminals! |
| 2. Use a screwdriver with the proper blade width. | |

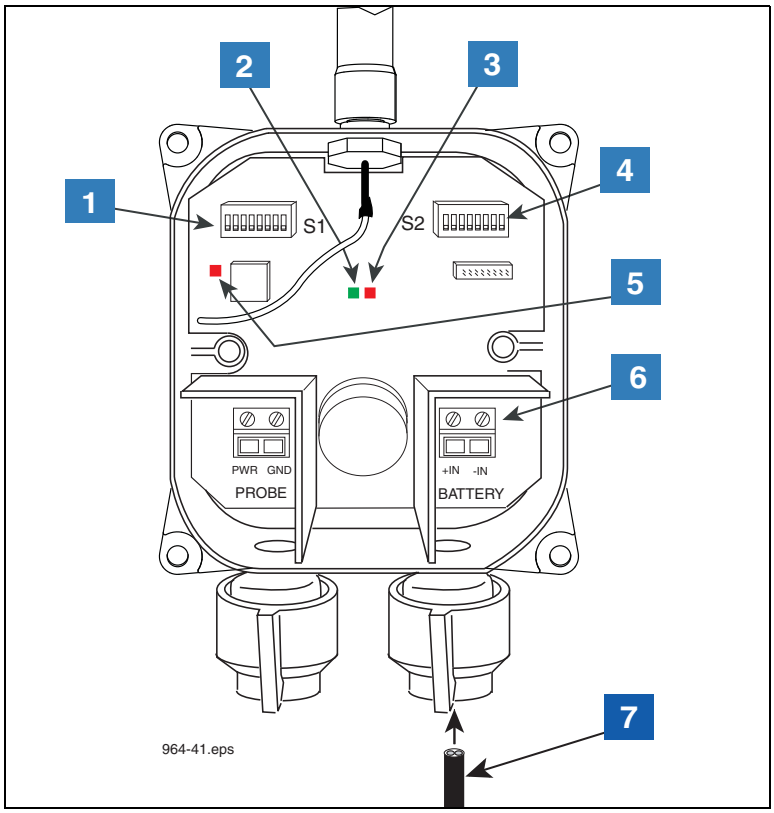


**Figure 5. Wiring The Battery Cable To The Transmitter**

| LEGEND FOR NUMBERED BOXES IN Figure 5 | |
|---|---|
| 1. S1 DIP switch | 6. Battery power-in terminals (+IN and –IN). Observe polarity! |
| 2. Green LED – Unit status. | **Pay close attention to the polarity of the +15 Vdc. Reversing the connections can cause damage to the TLS RF.** |
| 3. Red LED – Radio status. | 7. Cable from battery pack |
| 4. S2 DIP switch | |
| 5. Red LED – Flashes only when radio is powered on in Diagnostic Mode. | |

4. Using a #15 torx driver, open the covers of the TLS RF, Repeater and Receiver. Make a temporary ac power cord with a grounded plug on one end. Connect the ac power cord to the TLS RF's input power terminals and ground terminal (refer to Figure 6 and Figure 7). Connect a necessary length of RS-485 cable from the TLS RF's RS-485 terminals to the Receiver's RS-485 terminals (refer to Figure 20). Connect a necessary length of 2-conductor cable from the Receiver's Repeater terminals to the Repeater's Repeater terminals (refer to Figure 21).

5. The steps below are to verify the communication between the TLS RF Unit and the Receiver.

   a. Plug the TLS RF's ac power cord into a 120/240 Vac outlet. Confirm the Green /Red LEDs (refer to item 2 in Figure 12), are flashing rapidly. This is an indication there is RS-485 network activity between the TLS RF and the Receiver.

   b. If it is, continue to Step 6.

   c. If it is not, check PWR LED (refer to item 3 in Figure 12), if not lit; check power wiring. If the wiring is correct, measure the voltage across the twisted pair power wires, it should read +15Vdc. If it is not, the TLS RF is bad.

d. If the Red LED (refer to item 2 in Figure 12) is not flashing, confirm the TLS RF address is set to Master (refer to Appendix B, Figure B-1on how to set the TLS RF Device Number). If it is, the TLS RF has failed.

e. If the Red LED is flashing and the Green LED is not flashing, the TLS RF is not receiving a response from the Receiver.

f. Confirm the Receiver PWR LED is lit (refer to item 1 in Figure 20). If not check the power wiring.

- If the power wiring is correct, measure across the +15V and GND (refer to item 4 in Figure 20), it should be +15Vdc. If it is not, measure the voltage across the +15V and GND terminals in the TLS RF, it should read +15Vdc. If it does, replace the twisted pair power wires. If it does not, the Receiver is bad.
- Check the RS-485 Green LED (refer to item 1 (PWR LED) in Figure 20), if it is flashing; it is receiving Data from the TLS RF. If it is not flashing, check the RS-485 cabling between the TLS RF and the Receiver.
- Check the Red LED (XMIT LED, [item 1 in Figure 20]), if it is flashing; check the cabling. If it is not flashing, the Receiver is at fault; replace the Receiver.

6. This step is to verify to make sure Data from the Transmitter is being received by the TLS RF. Make sure the power to the Repeater is off.

a. Connect the first Transmitter's battery cable to a battery pack; noting the Red LED should be flashing momentarily then followed by the Green LED (refer to item 2 and 3 in Figure 5). Since there is no Sensor connected, the two LEDs should be flashing. This is an indication a Sensor communication error and is acceptable at this step.
**TIP - Normal flashing is when an LED turns On for over 1 second and turns Off for over 1 second. Error flashing is when an LED turns On and Off every 1/2 second or less.**

b. Go to the TLS RF, open its cover. One of the 8 Red received LEDs should be flashing (refer to item 5 in Figure 12). Observe which LED is lit and compare it against the Transmitter Device Number; they should match. For example, if the Transmitter ID is set to 1, the LED number 1 in the TLS RF should be flashing.

c. If the Transmitter Device Number and the LED in the TLS RF do not match, disconnect the Transmitter's battery cable from the battery pack. Move this DIP switches back and forth a few times to make sure they are set properly. Reset this DIP Switch to the correct setting; reconnect the battery cable; confirm that the correct LED is flashing.

d. If they still do not match, disconnect the Transmitter's battery cable from the battery pack; change the Transmitter Device Number to different setting and repeat Step 6.

e. If resetting the Transmitter to a different Device Number and the LED position in the TLS RF matches; that DIP Switch position is bad, the Transmitter is at fault.

f. If resetting the Transmitter to a different Device Number and the LEDs in the TLS RF and the Transmitter are not matched; remove the power from the Transmitter and put it aside.

g. Repeat Step 6 with the next Transmitter.

h. If both Transmitters have the same problems, it could be the Receiver or the TLS RF.

i. In the case where the LED in the TLS RF is not flashing, check the Site ID in the Receiver and the Transmitter to make sure they are correct. If the Site IDs are correct, the Transmitter or the Receiver is at fault. NOTE: Sometimes it is necessary to disconnect the battery cable from the battery pack and wait for 2 minutes and retry again to make sure the connection is established properly.

7. If all the Transmitters have been verified to be working properly, they are now ready to be installed.

8. Unplug the TLS RF, disconnect the temporary power cable and RS-485 cable to the Receiver and close the cover of the TLS RF, but do not tighten the cover screws at this time.

9. Disconnect the temporary RS-485 and 2-conductor cables from the Receiver and replace its cover, but do tighten at this time. Disconnect the temporary 2-conductor cable from the Repeater and replace its cover, but do not tighten at this time.

# TLS RF Installation

## Selecting A Location

**⚠ WARNING**

**Explosive vapors or flammable liquids could be present near locations where fuels are stored or being dispensed. The TLS RF is not explosion proof.**

**An explosion or fire resulting in serious injury or death, property loss and equipment damage could occur if the console is installed in a volatile, combustible or explosive atmosphere (Class I, Division 1 or 2).**

**Do not install this unit in a volatile, combustible, or explosive atmosphere.**

The TLS RF must be mounted indoors, protected from severe vibration, extremes in temperature and humidity, and other conditions that could harm computerized electronic equipment.

Ensure that the TLS RF is located where neither it nor its associated cabling will be damaged by doors, furniture, etc. Consider the ease of routing wiring, and ducting to the TLS console. Check that the mounting surface is strong enough to support the unit's weight of about 4 pounds.

## Mounting the TLS RF

Install the unit's fastening devices to the mounting surface using the hole pattern (6.7" x 5.7") shown in Figure 2. Mounting screws up to 3/16" diameter may be used.

Install metal conduit (1/2-inch I.P.S.) between the upper power side knockout on the unit and the power panel. Figure 2 shows the two designated knockouts (one each on top and bottom) through which power wiring can safely enter the unit.

Also install metal conduit (1/2-inch I.P.S.) between the lower intrinsically-safe wiring knockout on the TLS RF and an intrinsically-safe wiring knockout on the TLS console for device data wiring.

## Wiring the TLS RF

**⚠ WARNING**

**The unit contains voltages which can be lethal.**

**Connecting power wires to a live circuit can cause electrical shock that may result in serious injury or death.**

**Turn power off at the circuit breaker before connecting wiring to the TLS RF.**

**Attach conduit from the power panel to the unit's power wiring knockouts only (1 on top and 1 on bottom, ref. Figure 2)**

To connect power wiring see Figure 6. To connect Receiver wiring see Figure 7. To daisy chain two TLS RFs, see Figure 9 and Figure 10. To connect TLS RF data output wiring to the TLS console see Figure 6.

**WARNING! Do not apply power to the TLS RF Console until all device wiring is complete. This includes the wiring for the Receiver, Repeater, the probes and additional TLS RF Consoles.**

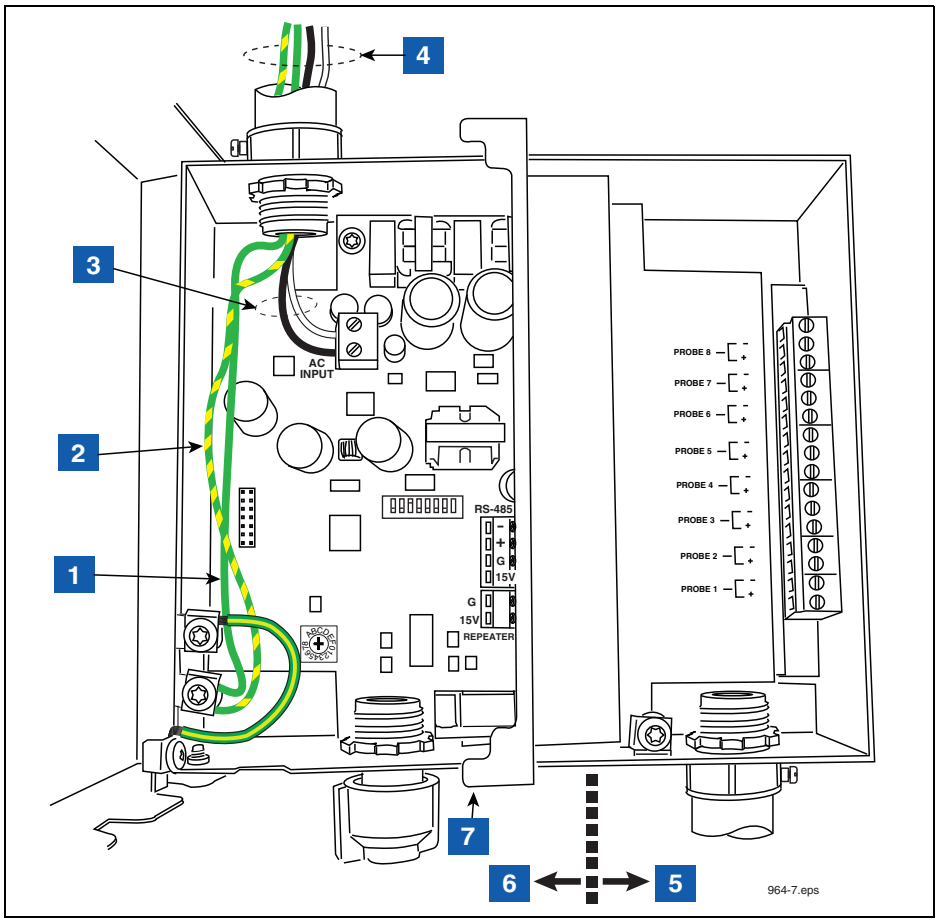


**Figure 6. Wiring AC Power To The TLS RF**

| LEGEND FOR NUMBERED BOXES IN Figure 6 | |
|---|---|
| 1. Attach chassis ground wire (#14 AWG) to ground lug. | 5. Intrinsically-safe side |
| 2. Protective earthing conductor (green and yellow). Attach #12AWG barrier ground wire to ground lug. Ground must be the same as the supply and less than 1.0 ohms to ground. | 6. Power side |
| 3. AC power input wires (#14 AWG) to AC INPUT terminals. | 7. RS-232 diagnostic port:<br>• Baud rate - 9600<br>• Data length - 8<br>• Parity - None<br>• Stop bits - 1 |
| 4. POWER WIRING NOTES:<br>• Barrier ground must be #12 AWG or larger diameter.<br>• Check to be sure that the electrical resistance between the unit ground lug and a known good earth ground is less than 1 ohm.<br>• Connect the power supply wires in the power panel to a separate dedicated circuit.<br>• Electrical rating power input - 120 Vac or 240 Vac, 50/60 Hz, 2 A max.<br>• See Figure 2 for actual locations of power conduit knockouts into the unit. Power wiring must enter only in one of these knockouts. | |

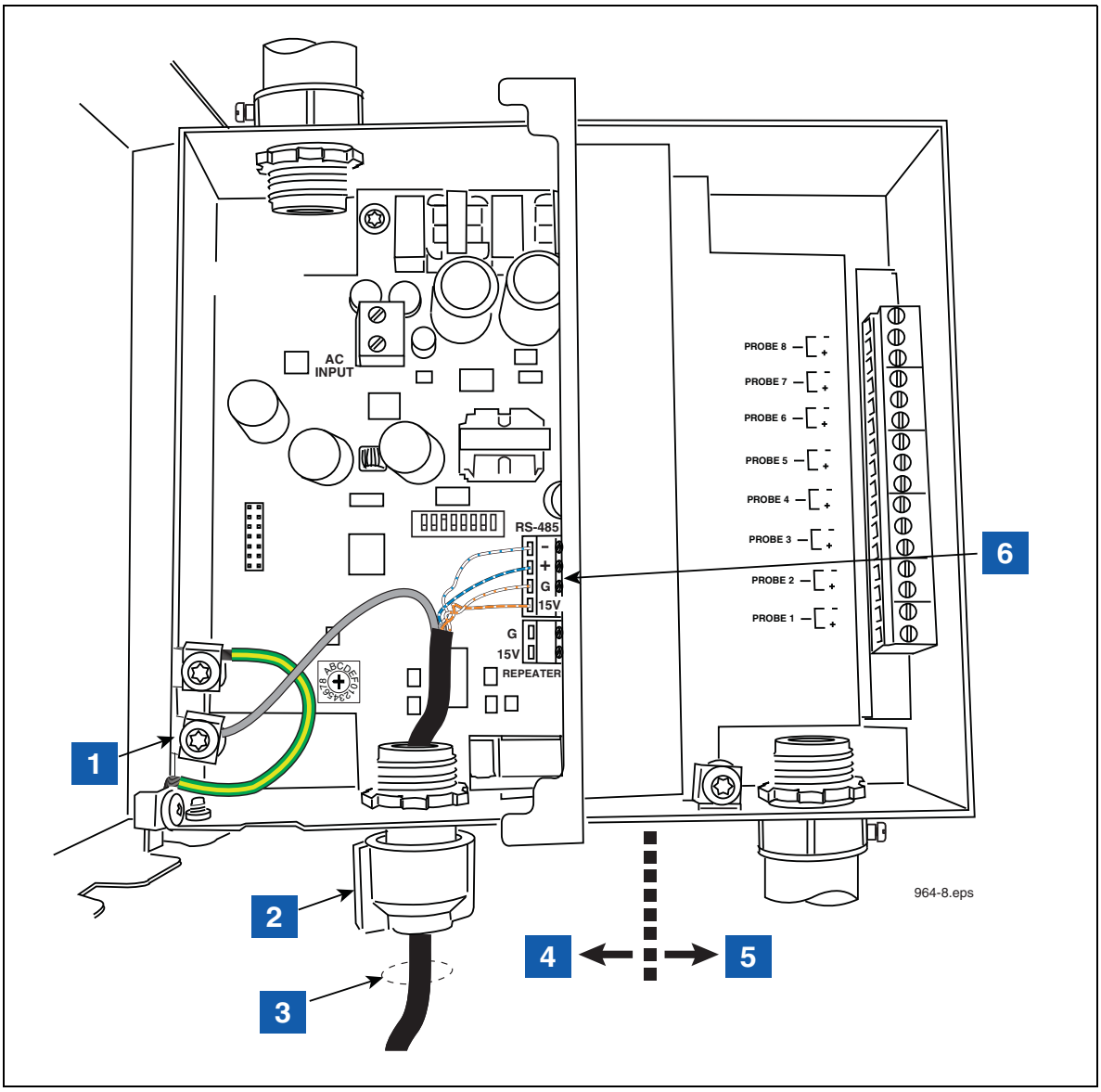


**Figure 7. Wiring Receiver To The TLS RF**

| LEGEND FOR NUMBERED BOXES IN Figure 7 | |
|---|---|
| 1. Connect the shield of the RS-485 cable to the ground lug.<br>2. Cord grip<br>3. RS-485 cable to Receiver<br>4. Power side<br>5. Intrinsically-safe side<br>6. NOTE: Attach one end of RS-485 cable to the RS-485 terminals in the TLS RF and other end to the RS-485 terminals in the Receiver. One twisted pair connects to terminals - and + (RS-485 signals) and the second twisted pair connects to terminals +15 and G (Receiver power). | 6 (Cont'd.).<br>Connect each of the four wires to the same terminals in the Receiver (ref. Figure 20).<br><br>NOTE: see Figure 4 for wire connection tips.NOTE: In sites with more than one TLS RF, the Receiver is only connected to the master TLS RF. |

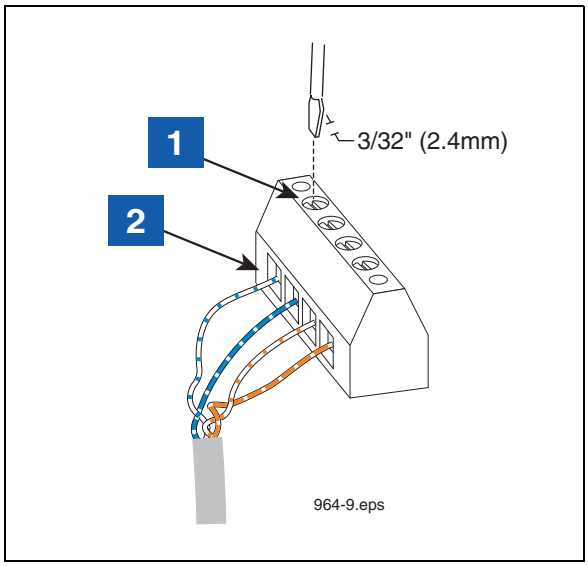


**Figure 8. Connecting RS-485 Wiring**

| LEGEND FOR NUMBERED BOXES IN Figure 8 | |
|---|---|
| 1. Use small blade screwdriver and loosen terminal by turning top screw over desired terminal counter clockwise. DO NOT raise screw head above top of hole or it may disengage from clamp. | 2. Insert 1/4” stripped wire into terminal clamp’s side opening and tighten screw clockwise until wire cannot be moved in or out. |

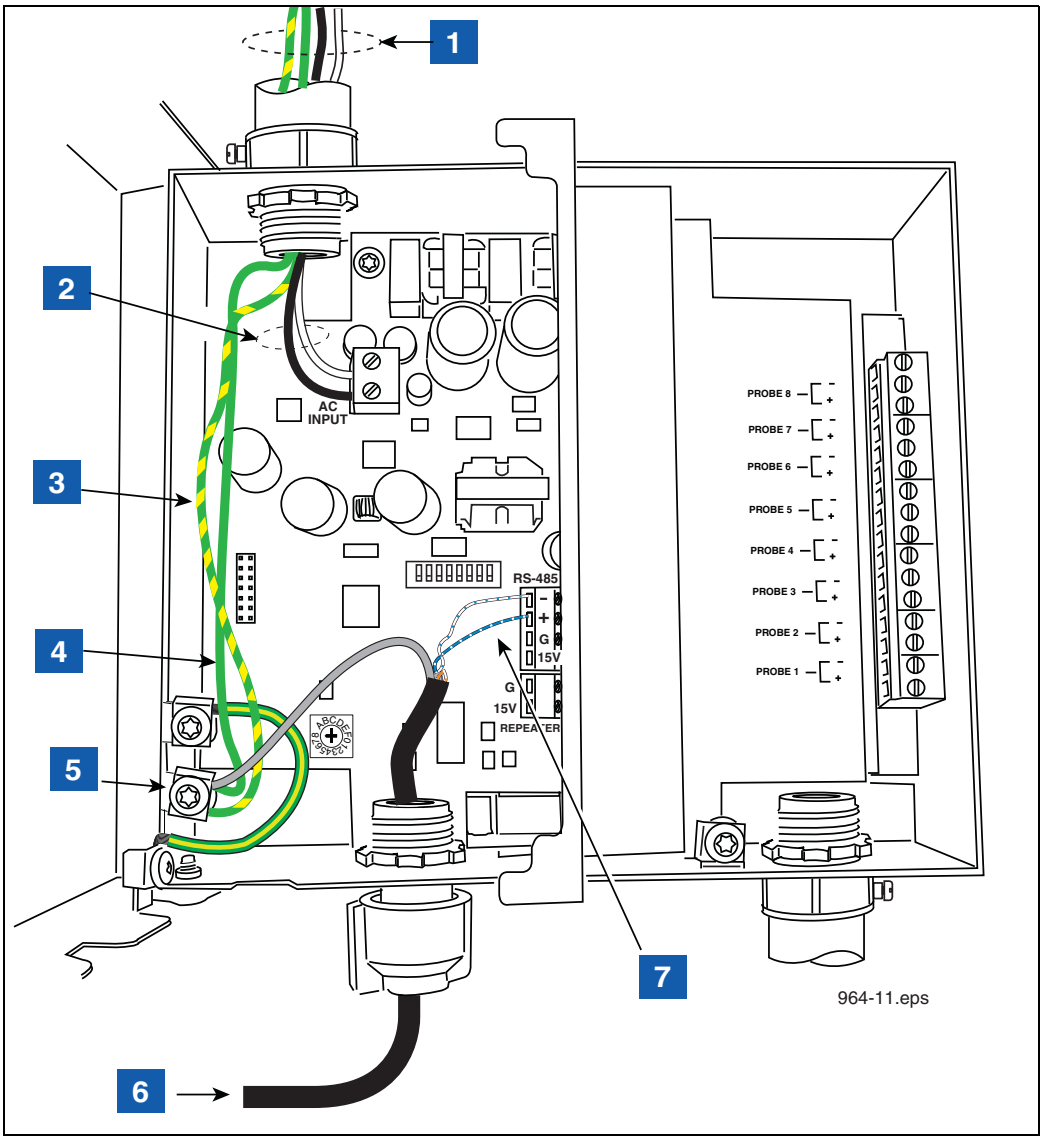


**Figure 9. Power Connections To A Daisy Chained TLS RFs**

| LEGEND FOR NUMBERED BOXES IN Figure 9 | |
|---|---|
| 1. POWER WIRING NOTES:<br>• Barrier ground must be #12 AWG or larger diameter.<br>• Check to be sure that the electrical resistance - between the unit ground lug and a known good earth ground is less than 1 ohm.<br>• Connect the power supply wires in the power panel to a separate dedicated circuit.<br>• Electrical rating power input - 120 Vac or 240 Vac, 50/60 Hz, 2 A max.<br>• See Figure 2 for actual locations of power conduit knockouts into the unit. Power wiring must enter only in one of these knockouts.<br>2. AC power input wires (#14 AWG) to AC input terminals. | 3. Protective earthing conductor (green and yellow). Attach #12AWG barrier ground wire to ground lug. Ground must be the same as the supply and less than 1.0 ohms to ground.<br>4. Attach chassis ground wire (#14 AWG) to ground lug.<br>5. Connect the shield of the RS-485 cable to the ground lug.<br>6. RS-485 cable from master TLS RF.<br>7. See Figure 10 for connections. |

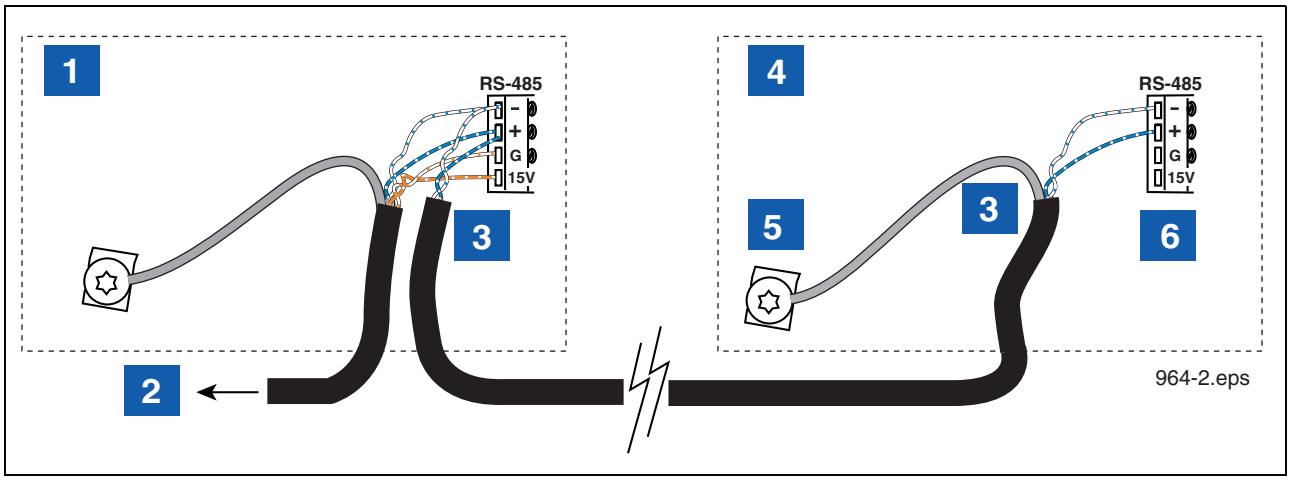


**Figure 10. RS-485 Cable Connections When Daisy Chaining Two TLS RFs**

| LEGEND FOR NUMBERED BOXES IN Figure 10 | |
|---|---|
| 1. Master TLS RF | 5. Connect the shield of the RS-485 cable to the ground lug. |
| 2. RS-485 cable to Receiver. | 6. Connect like colored wires of the twisted pair to like terminals in the auxiliary TLS RF. Each additional TLS RF connects in the same way. |
| 3. RS-485 cable to auxiliary TLS RF. Cut the unused twisted pair back to the cable's jacket at each end of the cable. Maximum cable length is 500 feet if a communication grade cable is used. | |
| 4. Auxiliary TLS RF | |

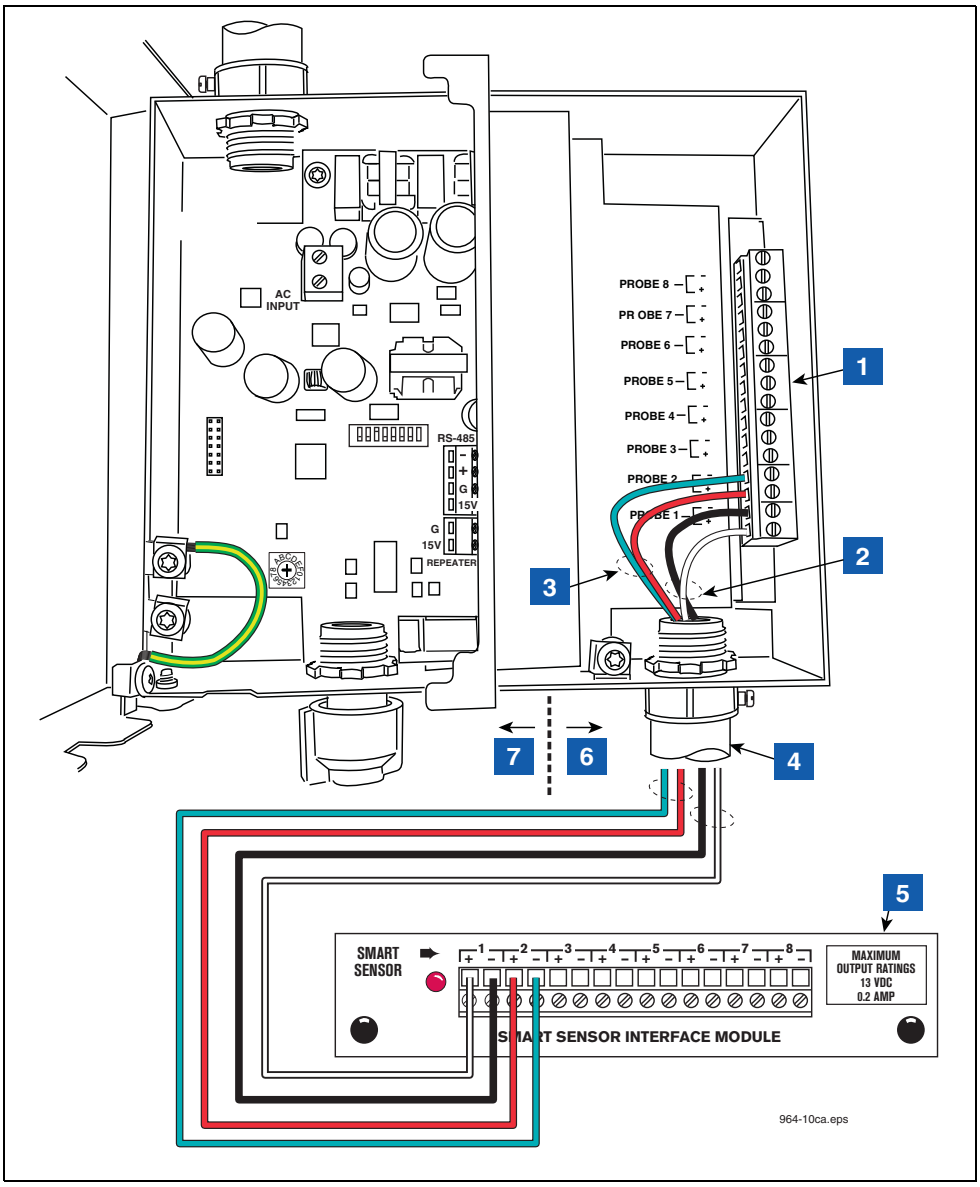


**Figure 11. Wiring Data Outputs from TLS RF to TLS Console**

**LEGEND FOR NUMBERED BOXES IN Figure 11**

Note: Output wiring from the TLS RF to the TLS console is an intrinsically safe circuit.

NOTE: Intrinsically safe wiring shall be installed in accordance with Article 504-20 of the NEC, ANSI/NFPA 70.

1. Received Transmitter data output terminals (1-8).
2. In this example, device output 1 is a Flow Meter - Observe polarity. Note: each time a transmission is received from this device, LED 1 (see item 5 in Figure 12) will flash.
3. In this example, device output 2 is a Flow Meter - Observe polarity. Note: each time a transmission is received from this device, LED 2 (see item 5 in Figure 12) will flash.
4. 1/2” i.p.s. conduit to TLS console
5. SmartSensor interface module in TLS console
6. Intrinsically-safe side
7. Power side

Figure 12 locates the diagnostic lights and setup switches in the TLS RF.

Each TLS RF in the site network must have a unique device set number (0,1,2 or 3). The factory default setting is ‘0’. You must select ‘0’ for the master TLS RF. The site’s Receiver must also be connected to the master TLS RF.

If a second TLS RF is required, enter ‘1’ in the auxiliary TLS RF. For additional TLS RFs, enter ‘2’ for the third and ‘3’ for the fourth.

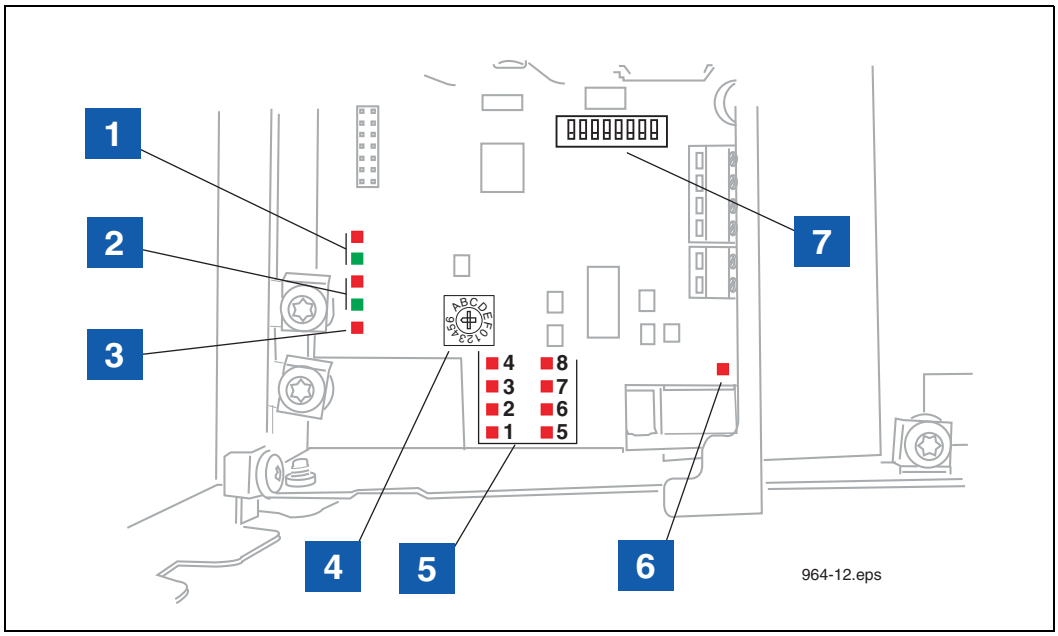


**Figure 12. TLS RF Diagnostic LEDs And Switch Locations**

| LEGEND FOR NUMBERED BOXES IN Figure 12 | |
|---|---|
| 1. These LEDs flash when there is comm activity on RS-232 port (Red = TX, Green = RX). | 5. These red LEDs flash when a message is received from a Transmitter in the monitored device set. LED 1 is the device wired to I.S. output terminal 1. LED 2 is the device wired to output terminal 2, etc. |
| 2. These LEDs flash when there is comm activity on the RS-485 network (between TLS RF and Receiver). | 6. Red LED flashes when TLS console is polling for device data. |
| 3. Red LED is lit when TLS RF is powered on. | 7. S2 DIP switches 1–2 enter device set address (see Appendix B). |
| 4. Device time out rotary switch selects the maximum allowed time to wait for communication from Transmitter before a Comm alarm is posted by TLS console (see Appendix B for selections). Position 1 (10 minutes) is the factory default setting. | |

# ISD Component Installation

## Vapor Flow Meter Installation - Dispenser

1. A Transmitter/battery pack pair must be installed with the Veeder-Root Vapor Flow Meter (VFM) in the dispenser cabinet.
2. Install the VFM in the dispenser following instructions accompanying the VFM.
3. Using two taptite screws from the kit, attach the Transmitter housing to the side of the battery support bracket that has the two circular slots (see Figure 13). Do not tighten screws at this time.
4. Remove the cover from the transmitter. Attach the non-connector end of the cable from the VFM to the transmitter as described in the section below entitled “Connecting Cables To The Transmitter” on page 27, then attach the transmitter/L bracket assembly to the back mounting surface using two #10 taptite screws from the kit.
5. Determine a support location within the dispenser cabinet that will allow you room for the transmitter/battery support bracket. Clamp the bracket to an available support structure (see Figure 14).
6. Rotate the Transmitter antenna as close as possible to a horizontal position then tighten two mounting screws in housing.
7. Insert the battery pack into its support bracket - do not connect the battery cable to the battery pack at this time.
8. Do not replace dispenser sheet metal cover until completing the “Site Startup Procedure”.

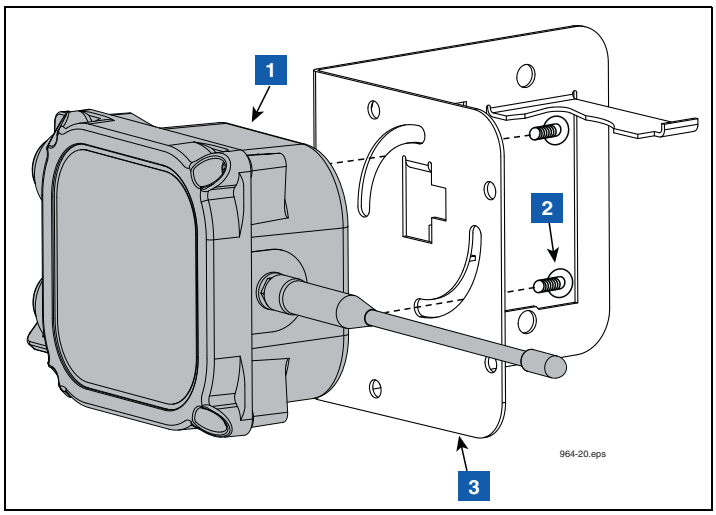


**Figure 13. Attaching Transmitter To Battery Support Bracket**

| LEGEND FOR NUMBERED BOXES IN Figure 13 |
|---|
| 1. Transmitter |
| 2. #10 x 1/2” taptite screws (2) |
| 3. Battery support bracket |

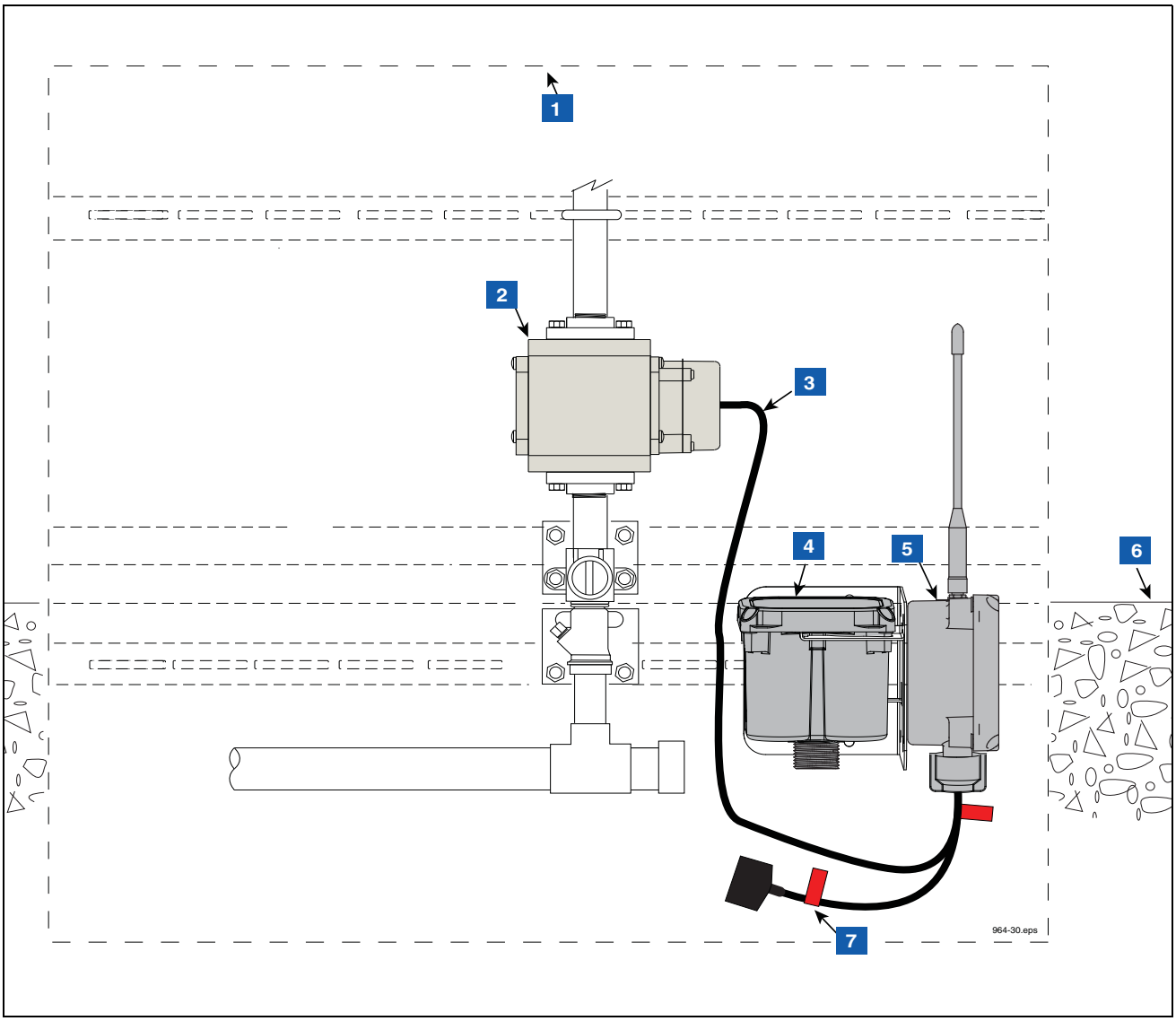


**Figure 14. Example VFM Transmitter Installation In Dispenser**

| LEGEND FOR NUMBERED BOXES IN Figure 14 | |
|---|---|
| 1. Base of dispenser cabinet | 5. Transmitter |
| 2. VFM | 6. top of dispenser pedestal |
| 3. VFM cable | 7. Battery caution label attached to battery cable (2 places) |
| 4. Battery pack | |

# Vapor Return Pressure Sensor Installation

## VENT STACK INSTALLATION EXAMPLE

1. A Transmitter/battery pack pair must be installed with the Veeder-Root Vapor Return Pressure Sensor (VRPS) in the Universal Enclosure and mounted on the vent stack (see Figure 15).
2. Install the VRPS sensor in the Universal Enclosure following instructions accompanying the sensor. During the installation, all required National, State and local safety codes must be followed.
3. Using two #10 taptite screws from the Universal Enclosure kit, attach the Transmitter housing to the side of the L bracket from the Universal Enclosure kit - do not attach L bracket/transmitter assembly to the back mounting surface at this time.
4. Get the battery pack mounting bracket from the Universal Enclosure kit and put the threaded connector fitting of the battery housing through the large hole in the bracket.
5. Get the thin hex nut from the kit and screw it onto the battery housing cable connector threaded fitting until snug (see item 4 in Figure 16).
6. Attach the battery housing/bracket assembly to the back mounting surface of the Universal Enclosure using two #10 taptite screws from the kit (see item 5 in Figure 16).
7. Connect the VRPS and battery cables to the VRPS transmitter as described in the section below entitled “Connecting Cables To The Transmitter” on page 27, then attach the transmitter/L bracket assembly to the back mounting surface using two #10 taptite screws from the kit.

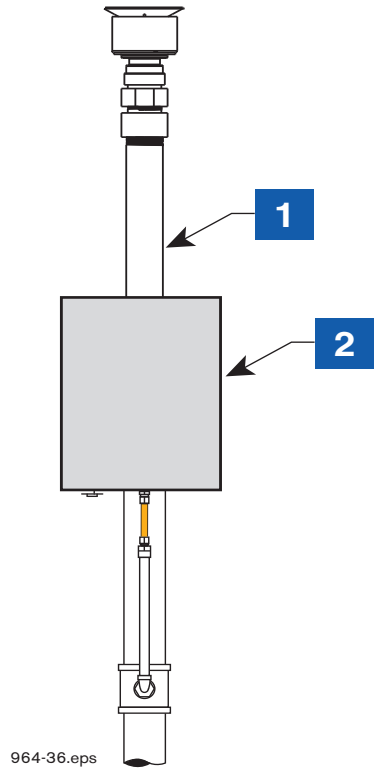


**Figure 15. VRPS Mounted In Universal Enclosure On The Vent Stack**

| LEGEND FOR NUMBERED BOXES IN Figure 15 | |
|---|---|
| 1. Vent stack | 2. VRPS sensor, wireless transmitter/battery in Universal Enclosure |

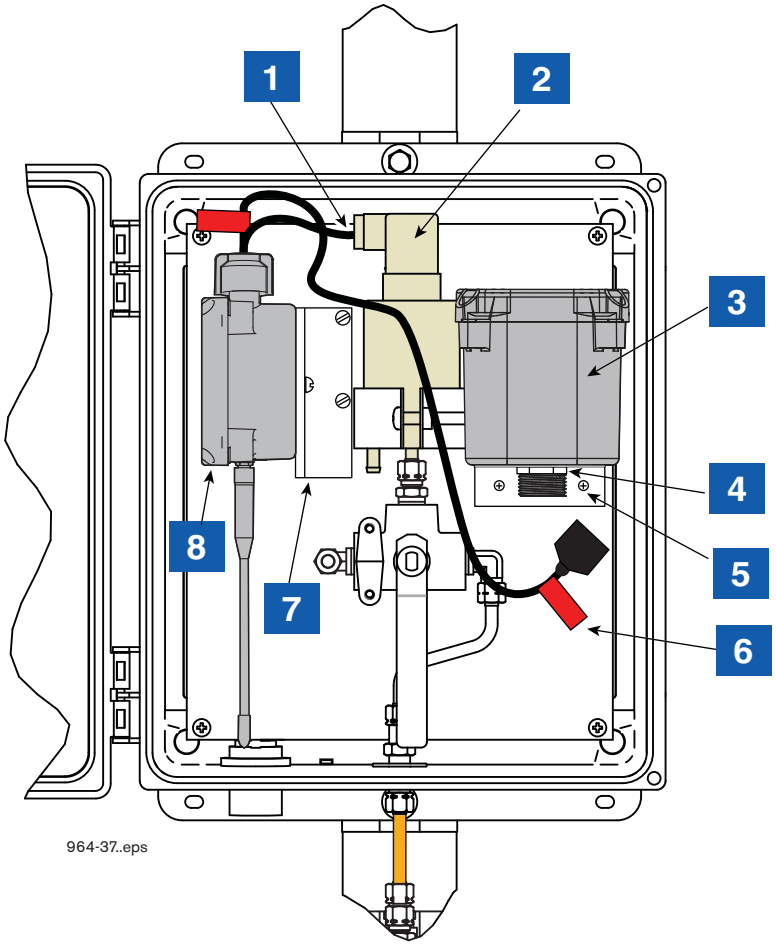


**Figure 16. Example VRPS Transmitter/battery Pack Installation In The Universal Enclosure**

| LEGEND FOR NUMBERED BOXES IN Figure 16 | |
|---|---|
| 1. VRPS cable | 5. Attach Battery L bracket using two #10 taptite screws |
| 2. VRPS | 6. Battery caution label attached to battery cable (2 places) |
| 3. Battery pack | 7. Attach Transmitter L bracket using two #10 taptite screws |
| 4. Thin hex nut | 8. Transmitter |

## Connecting Cables To The Transmitter

Note: The dip switches in each transmitter must be set to the proper dip switch settings listed in Appendix B. If the dip switches are set incorrectly, this device will fail to operate properly.

1. Using a #15 torx driver, remove the cover of the Transmitter.
2. Make sure the battery/DC power cable is not connected to the battery pack (item 7 in Figure 14) or dc power source at this time.

**WARNING! To prevent ignition of flammable or combustible atmosphere disconnect power before servicing.**

3. Remove the nut from the probe/sensor cable cord grip (left side cord grip) and slide it over the non-connector end of the probe/sensor cable. Push the end of the cable into the Transmitter.
4. Strip back cable jacket and wires as shown in Figure 17.
5. All probe/sensor cables connect to the PROBE terminal block the SAME WAY - the white wire to the PWR terminal and the black wire to the GND terminal as shown in Figure 18.

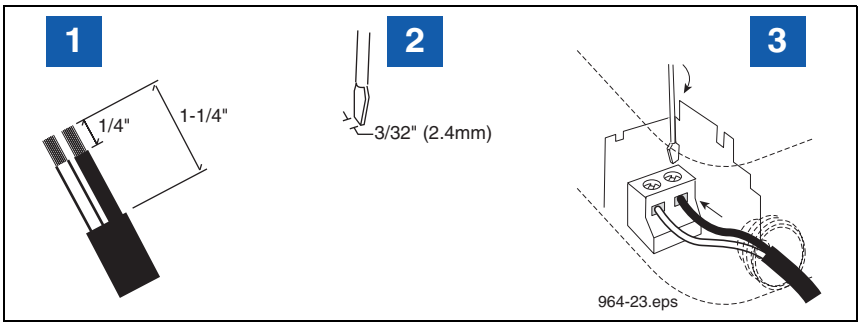


**Figure 17. Connecting Input Wiring To Transmitter Terminal Blocks**

| LEGEND FOR NUMBERED BOXES IN Figure 17 | |
|---|---|
| 1. Strip back cable and wire jackets the amount shown. | 3. Both wires must be tight in terminals! |
| 2. Use a screwdriver with the proper blade width. | |

6. Remove the nut from the power cable cord grip (right side cord grip) and slide it over the non-connector end of the power cable. Push the end of the cable into the Transmitter.
7. Strip back cable jacket and wires as shown in Figure 17.
8. Connect power cable wires to the BATTERY terminal block placing the white wire in the +IN terminal and the black wire in the –IN terminal as shown in Figure 18.
9. **Hand tighten both cable entry cord grip nuts to prevent water entry!**

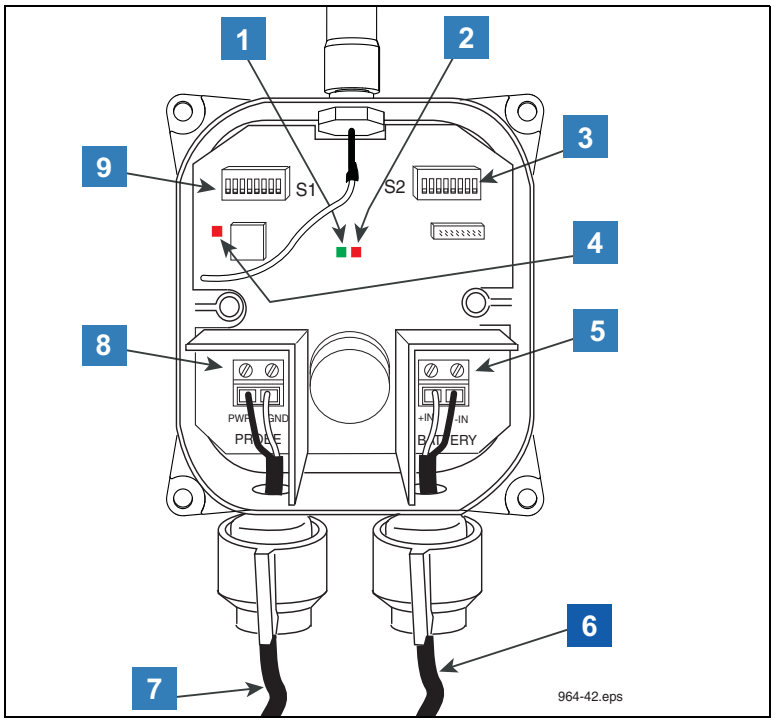


**Figure 18. Wiring The Transmitter**

**LEGEND FOR NUMBERED BOXES IN Figure 18**

1. Green LED – Unit status.
2. Red LED – Radio status.
3. S2 DIP switch.
4. Red LED – Flashes only when radio is powered on in Diagnostic Mode.
5. BATTERY power-in terminals (+IN and –IN). Observe polarity!
6. Cable from battery or DC power source.
7. Cable from probe/sensor.
8. PROBE input terminals (PWR and GND). OBSERVE POLARITY!
9. S1 DIP switch.

**Pay close attention to the polarity of the battery input connections. Reversing the connections can cause damage to the TLS RF.**

10. To assure a water-tight seal between the cover and the enclosure, follow these steps:
    a. Insert the four cover screws through the cover and then press on the retaining washers to hold the screws in place.
    b. Make sure that the cover gasket is free of dirt and debris on both sides of the gasket and that the inside of the cover is clean in the gasket area.
    c. Position the gasket into the cover groove, assuring that it is pressed fully into the groove and sitting completely flat.
    d. Assemble the cover onto the enclosure, tightening the screws in a couple of turns each. Using an alternating ‘X’ pattern, continue to tighten the screws until they are all tight.
11. If you haven’t done so already, attach the red battery labels from the installation kit onto the power cable below the power cord grip and at the battery pack connector or DC power source.
12. Do not attach the power cable at the battery pack or dc power source until ready to begin the “Site Startup Procedure”.

## Receiver Installation

1. One Receiver is required per site and it is mounted in the vertical position (antenna up) on the outer wall of the same building housing the TLS RF. The Receiver is attached to its mounting bracket with #10 x 1/2" taptite screws from its install kit (see Figure 19). The L-bracket is then mounted on the outer wall of the building using appropriate fasteners (customer supplied). If the Receiver will be exposed to the weather, attach the L-bracket to the mounting surface inside a weatherproof enclosure. This enclosure is not required when mounting the Receiver under a roof overhang and shielded from the weather.

   NOTE: When locating the mounting position, keep in mind that the RS-485 cable connecting the Receiver to the TLS RF must be less than 250 feet in length. Avoid placing the Receiver near motors (e.g., power roof vents), fluorescent lighting (min. 1 foot separation), pumps, welders.

   Locate the Receiver on the same side of the building as the transmitters. If additional transmitters are either too far away or on the opposite side of the building, the Repeater can be located either on a structure near the remote transmitter(s) or on the opposite side of the building facing those transmitter(s) - see Repeater installation.

**The Receiver is only suitable for use in a non-hazardous location.**

2. Run the RS-485 cable (Belden #3107A or equiv.) from the TLS RF through the building's wall to the Receiver. Caulk the cable where it passes through wall openings. Use cable clamps at appropriate intervals to secure the cable to the walls.
3. Note that the Receiver cover label indicates the cord grip to be used for the RS-485 cable from the TLS RF and the cable to the Repeater (if used). Remove the cover of the Receiver and set it aside.
4. Set S1 and S2 DIP settings as desired (ref. Appendix B, Figure B-2). NOTE: set all dip switches prior to attaching the TLS RF RS-485 cable as the dip switches are only read during power up.
5. Slide the nut over the cable. Choose the correct size bushing and slide it over the cable. Dress the cable jacket according to the dimensions in Figure 17. Insert the cable into the appropriate opening at the bottom of the housing. Insert each wire into the appropriate terminal and tighten. Leave a small amount of slack in each wire. Slide the bushing into the bottom of the housing. Hand tighten the nut.
6. Note that there are two twisted pair color-coded wires in the cable (e.g., a white with blue stripe and blue with white stripe pair and a white with orange strip and orange with white stripe pair). One of the pairs is for RS-485 communication (- & + terminals) and the other pair is for Receiver power (+15 Vdc & Gnd). Using Figure 20 as a guide, attach the wires of the two twisted pairs to the RS-485 terminals.

   Record which wire attaches to each terminal to help you attach the other end of that wire to the identically marked terminal in the TLS RF.

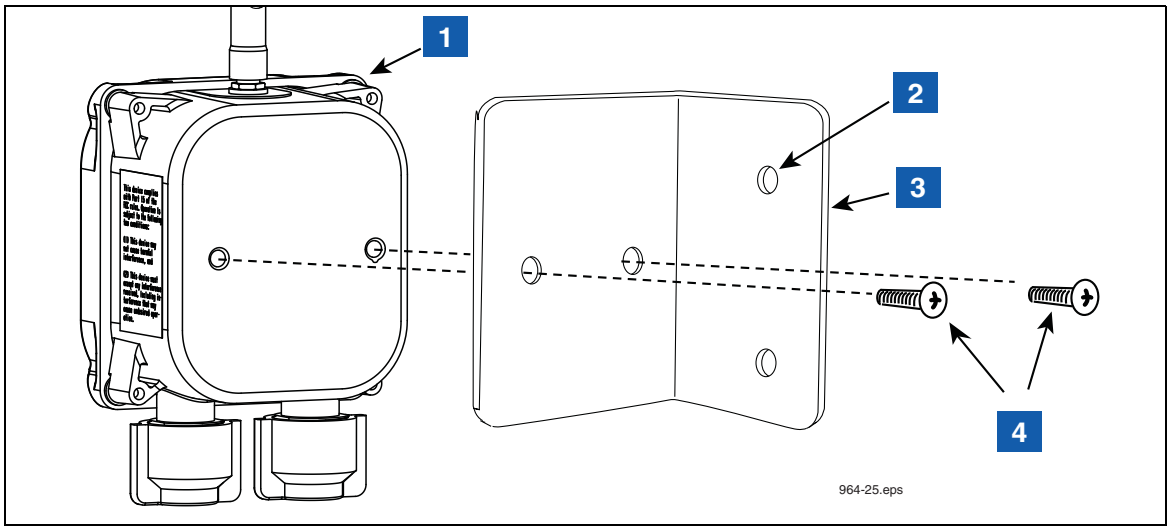


**Figure 19. Attaching Mounting Bracket To Receiver Or Repeater**

| LEGEND FOR NUMBERED BOXES IN Figure 19 | |
|---|---|
| 1. Receiver or Repeater | 4. #10 x 1/2" taptite screws |
| 2. 0.280" diameter hole (2) – mount this narrow side of bracket to wall or post | |
| 3. Mounting bracket. | |

7. Referring to your connection notes in step 5 above, connect the other end of the RS-485 cable to the RS-485 terminal block in the TLS RF (ref. Figure 7 on page 16).
8. If a Repeater is used and powered by the Receiver, push the two wire power cable (to Repeater) through the +15 Vdc cord grip of the Receiver (item 7 in Figure 20).
9. Slide the nut over the cable. Choose the correct size bushing and slide it over the cable. Dress the cable jacket according to the dimensions in Figure 17. Insert the cable into the appropriate opening at the bottom of the housing. Insert each wire into the appropriate terminal and tighten. Leave a small amount of slack in each wire. Slide the bushing into the bottom of the housing. Hand tighten the nut.
10. Attach the dc power cable (white to +15 Vdc and black to GND) to the Repeater terminal block (item 9 in Figure 20).
11. **Hand tighten both cable entry cord grip nuts to prevent water entry!**
12. To assure a water-tight seal between the cover and the enclosure, follow these steps:
    a. Insert the four cover screws through the cover and then press on the retaining washers to hold the screws in place.
    b. Make sure that the cover gasket is free of dirt and debris on both sides of the gasket and that the inside of the cover is clean in the gasket area.
    c. Position the gasket into the cover groove, assuring that it is pressed fully into the groove and sitting completely flat.
    d. Assemble the cover onto the enclosure, tightening the screws in a couple of turns each. Using an alternating 'X' pattern, continue to tighten the screws until they are all tight.

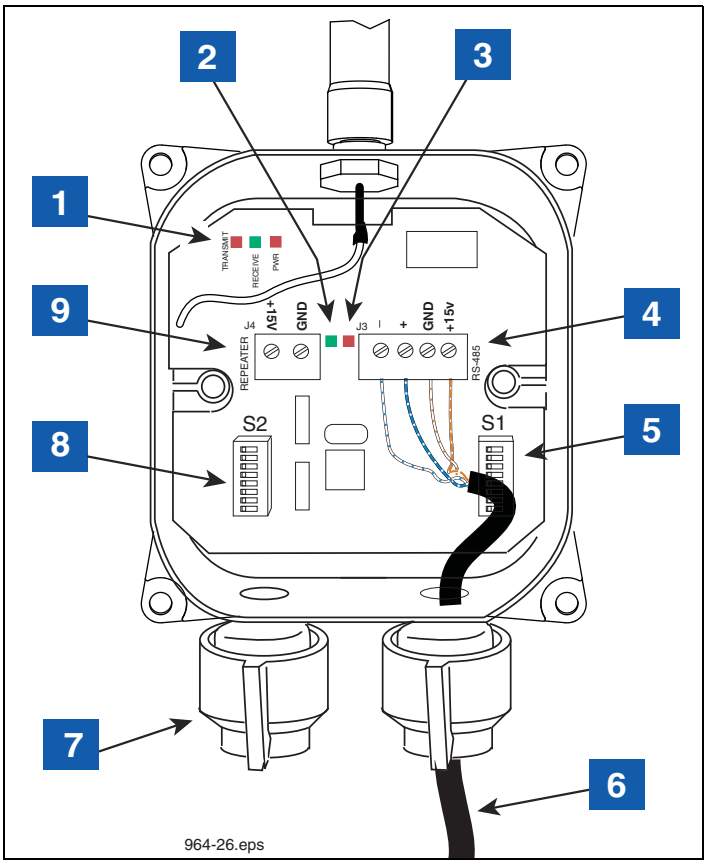


**Figure 20. Wiring The Receiver**

**LEGEND FOR NUMBERED BOXES IN Figure 20**

1. RS-485 Comm Activity:
   - XMIT (Red) LED – flashes when message transmitted to TLS-RF
   - RCV (Green) LED – flashes when message received from TLS-RF
   - PWR (Red) LED – Receiver power on indicator
2. Green LED – Unit status
3. Red LED – Radio status
4. Connect the color pairs of the RS-485/power cable to the same RS-485 terminals in both the Receiver and the master TLS RF (ref. "Connecting RS-485 Wiring" on page 17).
5. S1 DIP switch
6. RS-485 cable - Maximum cable length is 500 feet if a communication grade cable is used.
7. A solid bushing must be installed to seal the Receiver when this cord grip is unused. In sites where a Repeater is powered from the Receiver, the Repeater's power cable enters through this cord grip and attaches to the Repeater terminal block (item 9).

**HAND TIGHTEN BOTH CABLE ENTRY CORD GRIP NUTS TO PREVENT WATER ENTRY!**

8. S2 DIP switch
9. +15 Vdc power source for the Repeater. If used, connect two wires from item 9 connector in Receiver to item 7 connector in Repeater, see Figure 21.

**Pay close attention to the polarity of the +15 Vdc and GND wires used as Repeater power source. Reversing these connections can cause damage to the TLS RF.**

## Repeater Installation

1. Use of a single repeater is optional but may improve system performance when installed correctly. The Repeater should be located closer to the device transmitters to rebroadcast messages to the Receiver. Use the 15 Vdc power source provided in the Receiver to power the Repeater, or use a customer supplied non-interruptible, Class 2, 15 Vdc power source. The most common method of powering the Repeater power is to use the Repeater power terminal block J4 in the Receiver (see item 9 in Figure 20).

   When device transmitters are on the opposite side of the building from the Receiver, the Repeater should be mounted on the side of the building facing those transmitters. Mount the Repeater with its transmitter antenna in the up or vertical orientation.

2. The Repeater is attached to its mounting bracket with #10 x 1/2" taptite screws from its install kit (ref. Figure 19 on page 30). The L-bracket is then attached to the outer wall of the building using appropriate fasteners (customer supplied). If the Repeater will be exposed to the weather, attach the L-bracket to the mounting surface inside a weatherproof enclosure. This enclosure is not required when mounting the Repeater under a roof overhang and shielded from the weather.

**The Repeater is only suitable for use in a non-hazardous location.**

3. Set S1 and S2 as desired (refer to Appendix B). NOTE: set all dip switches prior to connecting the +15 Vdc power cable as the dip switches are only read during power up.

4. Note the cover of the Repeater indicates the cord grip to be used for the cable connecting the Repeater to its dc power source (item 5 in Figure 21). Remove the cover of the Repeater and set it aside.

5. Slide the nut over the cable. Choose the correct size bushing and slide it over the cable. Dress the cable jacket according to the dimensions in Figure 17. Insert the cable into the appropriate opening at the bottom of the housing. Insert each wire into the appropriate terminal and tighten. Leave a small amount of slack in each wire. Slide the bushing into the bottom of the housing. Hand tighten the nut.

6. Connect the 2-wire dc power cable to the Repeater terminal block, white to +15 Vdc and black to GND (see item 7 in Figure 21).

7. **Hand tighten both cable entry cord grip nuts to prevent water entry!**

8. To assure a water-tight seal between the cover and the enclosure, follow these steps:

   a. Insert the four cover screws through the cover and then press on the retaining washers to hold the screws in place.

   b. Make sure that the cover gasket is free of dirt and debris on both sides of the gasket and that the inside of the cover is clean in the gasket area.

   c. Position the gasket into the cover groove, assuring that it is pressed fully into the groove and sitting completely flat.

   d. Assemble the cover onto the enclosure, tightening the screws in a couple of turns each. Using an alternating 'X' pattern, continue to tighten the screws until they are all tight.

9. The other end of the Repeater's dc power cable connects to the Receiver's +15 Vdc output terminal (ref. item 9 in Figure 20), or to a non-interruptible, Class 2, 15 Vdc power source.

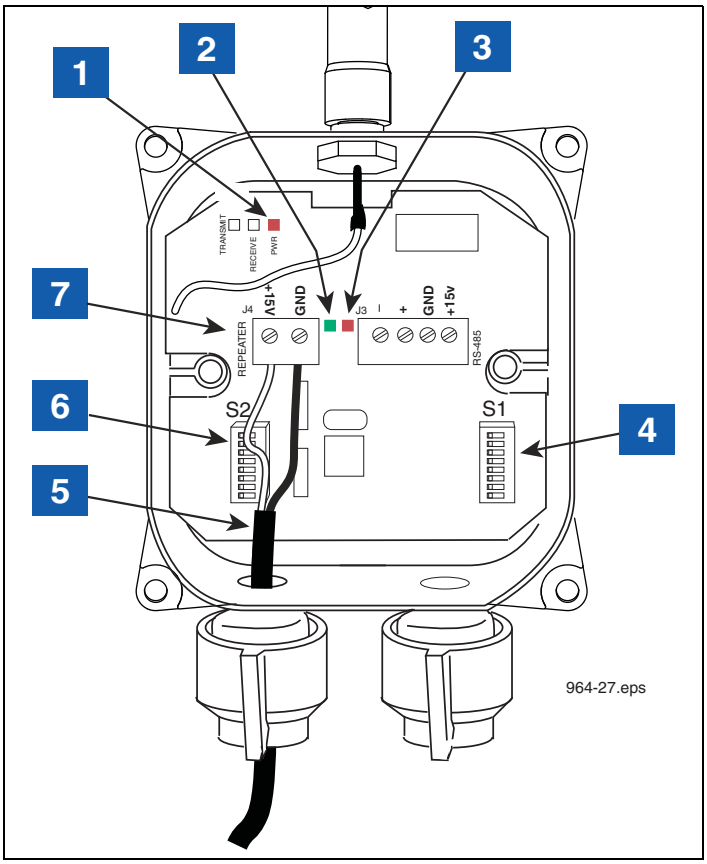


**Figure 21. Wiring The Repeater**

| LEGEND FOR NUMBERED BOXES IN Figure 21 | |
|---|---|
| 1. Red LED – on when power is applied. | 6. S2 DIP switch |
| 2. Green LED – Unit status | 7. DC power input terminals - +15 Vdc and ground |
| 3. Red LED – Radio status | **Pay close attention to the polarity of the +15 Vdc and GND wires from the Receiver or DC power source. Reversing these connections can cause damage to the TLS RF.** |
| 4. S1 DIP switch | |
| 5. DC Power input cable (from Receiver [item 9 connector - see Figure 20], or dc power source) | |

# Network Setup

## Hardware Overview

An example TLS RF Wireless System site network illustrating a 32 Transmitter configuration is shown in Figure 22. The maximum number of Transmitters permissible in a site is 32 (requires 4 TLS RFs).

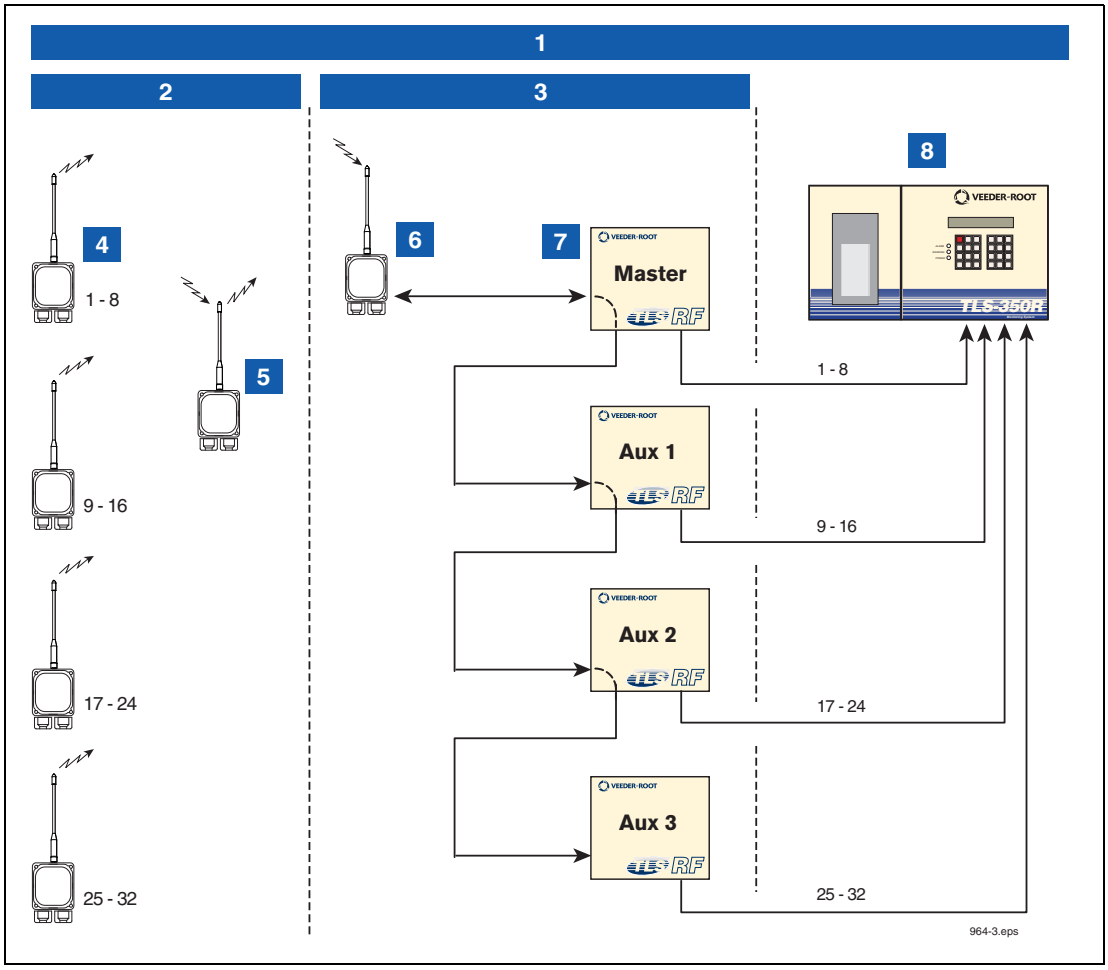


**Figure 22. Example Site Network Diagram**

**LEGEND FOR NUMBERED BOXES IN Figure 22**

1. Site Network
2. Wireless network
3. VR bus
4. Transmitters
5. Repeater
6. Receiver
7. TLS RF, one required per 8 Transmitters
8. TLS console

## Identifying Devices in the TLS RF Wireless Site Network

The Site ID must be identical for all Transmitters, the Repeater, and the Receiver in the site's wireless network. Each Transmitter in the site's wireless network must have a unique Device Number (from 1 – 32). Each TLS RF in the site's network must have a unique Device Number (Master at 0 and Auxiliaries at1, 2, and/or 3).

All Device Numbers are entered using DIP switches located in each device and are entered in each device before it is installed.

Making up a site network worksheet before actually setting device DIP switches or connecting signal wires will help prevent mistakes when entering Site IDs/Device Numbers or making wiring connections between the TLS RF(s) and the TLS console.

## Entering Device Numbers for the Site Network

### TRANSMITTER DEVICE NUMBER

Each of the transmitters must have a unique Device Number (1 – 32). Enter this number by setting DIP switches 4 – 8 on S1 (see Figure 18 on page 28) in the 'off' position or 'on' position as shown below.

| Device Number | S1 DIP Switch Settings | | | | | Device Number | S1 DIP Switch Settings | | | | |
|---|---|---|---|---|---|---|---|---|---|---|---|
| | 4 | 5 | 6 | 7 | 8 | | 4 | 5 | 6 | 7 | 8 |
| **1** | off | off | off | off | on | **17** | on | off | off | off | on |
| **2** | off | off | off | on | off | **18** | on | off | off | on | off |
| **3** | off | off | off | on | on | **19** | on | off | off | on | on |
| **4** | off | off | on | off | off | **20** | on | off | on | off | off |
| **5** | off | off | on | off | on | **21** | on | off | on | off | on |
| **6** | off | off | on | on | off | **22** | on | off | on | on | off |
| **7** | off | off | on | on | on | **23** | on | off | on | on | on |
| **8** | off | on | off | off | off | **24** | on | on | off | off | off |
| **9** | off | on | off | off | on | **25** | on | on | off | off | on |
| **10** | off | on | off | on | off | **26** | on | on | off | on | off |
| **11** | off | on | off | on | on | **27** | on | on | off | on | on |
| **12** | off | on | on | off | off | **28** | on | on | on | off | off |
| **13** | off | on | on | off | on | **29** | on | on | on | off | on |
| **14** | off | on | on | on | off | **30** | on | on | on | on | off |
| **15** | off | on | on | on | on | **31** | on | on | on | on | on |
| **16** | on | off | off | off | off | **32** | off | off | off | off | off |

964-43.eps

### TLS RF DEVICE NUMBER

Each TLS RF in the site network must have a unique Device Number (0 – 3). You must select 0 if it is the only TLS RF in the site, or if it is the TLS RF in a site with multiple TLS RFs that is monitoring the first Device Set (transmitters 1 – 8). You would enter a 1 for the TLS RF monitoring the second Device Number (transmitters 9 – 16), etc. The site's receiver must also be connected to the TLS RF having Device Number '0'. The factory default setting is '0'.

Enter this number by setting DIP switches 1 and 2 on S2 (see Figure 12 on page 21) in the 'off' position or 'on' position as shown below.

| Transmitter Device Number | TLS RF Device Number | S2 DIP switch Settings | | TLS RF |
|---|---|---|---|---|
| | | 1 | 2 | |
| **1-8** | **0** | off | off | Master |
| **9-16** | **1** | off | on | AUX 1 |
| **17-24** | **2** | on | off | AUX 2 |
| **25-32** | **3** | on | on | AUX 3 |

964-48.eps

## Entering the Site ID Number

All of the site's Transmitters, Repeater and Receiver must have the same Site ID number (0 – 15) entered in S2 DIP switches 5 - 8 (see settings below). The TLS RF does not require a Site ID. The factory default Site ID number for all components is set to 0.

NOTE: You must change the factory set Site ID when another site is nearby. Adjoining sites will experience data reception 'crosstalk' if both are left at the same number.

| Site ID Number | S2 DIP switch Settings | | | | Site ID Number | S2 DIP switch Settings | | | |
|---|---|---|---|---|---|---|---|---|---|
| | 5 | 6 | 7 | 8 | | 5 | 6 | 7 | 8 |
| **0** | off | off | off | off | **8** | on | off | off | off |
| **1** | off | off | off | on | **9** | on | off | off | on |
| **2** | off | off | on | off | **10** | on | off | on | off |
| **3** | off | off | on | on | **11** | on | off | on | on |
| **4** | off | on | off | off | **12** | on | on | off | off |
| **5** | off | on | off | on | **13** | on | on | off | on |
| **6** | off | on | on | off | **14** | on | on | on | off |
| **7** | off | on | on | on | **15** | on | on | on | on |

964-49.eps

## Site Startup Procedure

Depending on the site layout, it is permissible to install RF devices in a variety of locations including dispensers and containment sumps. After all the wireless equipment has been installed, follow the steps below to verify the final setup. For transmitters installed in Dispensers, do not close the dispenser's cover after installing the Transmitter in case signal strength is a problem. Close the dispenser's cover only after the Transmitter passes a second verification process.

1. Turn on power to the TLS RF(s) and leave the covers open.
2. Go to the first Transmitter and connect the power cable to its power source.
3. At the TLS RF you should see one of the 8 red LEDs flashing (item 5 in Figure 12). This is an indication the transmission from the Transmitter is being received. If it is, go to Step 2a. If one of the 8 LEDs is not flashing go to Step 2b.
   a. Go back to the Transmitter, and if applicable, replace the dispenser's cover. Return to the TLS RF and verify that the same LED is still flashing.
      i. If it is, disconnect the battery cable from the battery pack and repeat Step 1 on the next Transmitter.
      ii. If it is not, the Receiver is not picking up the Transmitter's signal. Go back to the Transmitter; remove the dispenser's cover, reorient the antenna or lower the Transmitter, then go back to the TLS RF to verify that the same LED is flashing.
      iii. If reorienting the antenna or moving the Transmitter doesn't help, disconnect the battery cable from the battery pack and make a note that the signal is not being received at this particular dispenser.
      iv. Repeat Step 1 with the next Transmitter.
   b. If applicable, go back to the dispenser, remove the Transmitter's cover; the green LED (item 2 in Figure 5) should be flashing indicating that the sensor is being read. If the green LED is not flashing, check the sensor cable's wiring connections. If the wiring is correct, check Site ID. If it is correct, it means either the Transmitter is bad or there is a problem with the sensor, disconnect the battery cable from the battery pack and continue to Step 1 with the next Transmitter.
4. After verifying that each Transmitter is being received at the TLS RF(s), go around to each Transmitter; reconnect the Transmitters' battery cable to the battery pack. Replace dispenser's cover as appropriate. Go to the TLS console and configure all site sensors. Check for any comm alarms. If none are observed, the startup is complete.

NOTE: If some Transmitters are not being received at the TLS RF, relocating the Receiver and/or the Repeater may improve reception.

## Initial TLS Console Setup Procedure

**CAUTION! Failure to follow your applicable startup procedure will result in the probes/sensors not being recognized.**

- **Sites with a New TLS-450/, TLS4 or TLS-XB Only**
  1. Power up all wireless devices.
  2. Power up the TLS RF console and wait about 5 minutes.
  3. Power up the TLS-450 console and wait 5 minutes until the device 'Discover Mode' is Complete.
- **Sites with all Other TLS Consoles**
  1. Power up all wireless devices
  2. Power up both the TLS and TLS RF consoles.

# Diagnostics

## Alarms

During normal operation when the TLS Console and monitored PMC and ISD System are functioning properly and no warning or alarm conditions exist, the “ALL FUNCTIONS NORMAL” message will appear in the system status area of the console display. Regardless of the TLS Console in use at this site, record the software part number as well as the software revision.

There is an additional alarm, Battery Status (TLS-350 only), when wireless equipment is used in place of wires. ISD, PMC and Smart Sensor warnings and alarm are the same. If a warning or alarm condition occurs as a result of a failure in the wireless communication hardware the system displays the communication failure for the effected Smart Sensor. If more than one condition exists, the display will alternately flash the appropriate messages. The system automatically prints an alarm report showing the warning or alarm type, its location and the date and time the warning or alarm condition occurred.

Any break in link between transmitter and sensor, or between TLS and TLS RF results in Communication Alarm. All other alarms related to individual sensor types, such as sensor fault alarm, are supported as they are with a wired system. When the Sensor Transmitter has determined the communication with the RF box has failed it will command the Vapor Valve to close. The valve will remain closed until an open command is sent (from the TLS) after communication is reestablished.

## Battery Diagnostics

You can get the battery status from the TLS-350 (with software Version 30A or higher). The battery status is displayed for the wireless sensors, from the Smart Sensor Diagnostics (see Figure 23). The wireless sensors’s battery status can also be printed from that screen.

The battery status for the wireless sensors is reported as Full, Medium, Low or Replace.

- Full: greater than or equal to 3.4 Volts
- Medium Range: 3.2V to 3.4 Volts
- Low range: 3.0V to 3.2V
- Replace: Below 3.0V

When the Smart Sensor battery reports a status ‘Replace’ continuously for 24 hours, a Smart Sensor warning will be posted on the TLS to alert the operator that the battery requires replacement. The warning will persist in the TLS until the battery reports ‘Medium’ or ‘Full’. The alarm will clear at that time. This is a low priority TLS warning which will sound the beeper, flash the yellow warning light, post on the two line display, print on the printer and be recorded in the non-priority alarm history. The warning can be accessed remotely and be reported remotely similar to all TLS warnings and alarms. This warning will not appear in the ISD or PMC reports (only sensor failures are recorded in the ISD and PMC reports).

### WIRELESS SENSOR DIAGNOSTIC MENU (TLS-350 CONSOLES)

The Battery Status for all wireless Smart Sensors will be displayed in the menu after the Serial Number (see Figure 23).

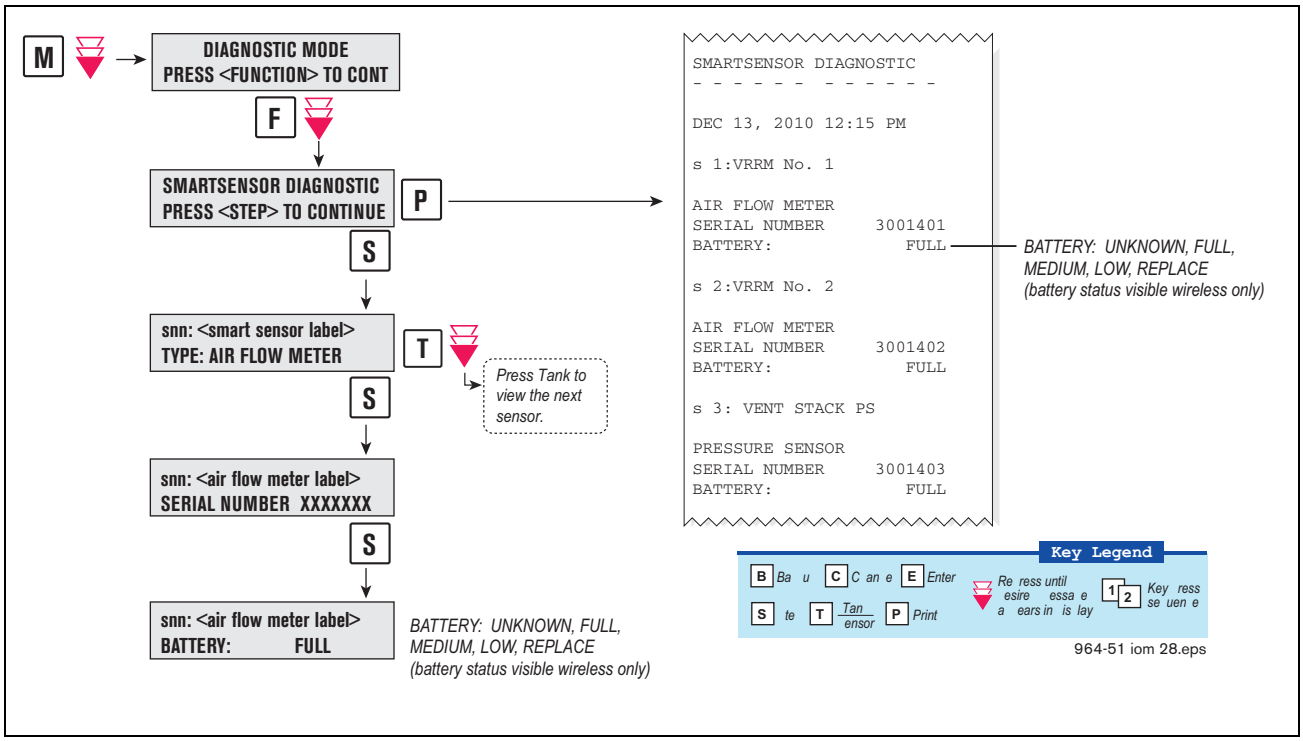


**Figure 23. Device Battery Status In TLS-350 SmartSensor Diagnostic Menu**

# Appendix A: Regulatory Information

## Federal Communications Commission Notice

This equipment has been tested and found to comply with the limits for a Class B digital device, pursuant to Part 15 of the FCC Rules. These limits are designed to provide reasonable protection against harmful interference in a residential installation. This equipment generates, uses, and can radiate radio frequency energy and, if not installed and used in accordance with the instructions, may cause harmful interference to radio communications. However, there is no guarantee that interference will not occur in a particular installation. If this equipment does cause harmful interference to radio or television reception, which can be determined by turning the equipment off and on, the user is encouraged to try to correct the interference by one or more of the following measures:

- Reorient or relocate the receiving antenna
- Increase the separation between the equipment and receiver
- Connect the equipment into an outlet on a circuit different from that to which the receiver is connected
- Consult the dealer or an experienced radio or television technician for help.

### MODIFICATIONS

The FCC requires the user to be notified that any changes or modifications made to this device that are not expressly approved by Veeder-Root Company may void the authority to operate the equipment.

### CABLES

Connections to this device must be made with shielded cables with metallic RFI/EMI connector hoods in order to maintain compliance with FCC Rules and Regulations.

DECLARATION OF CONFORMITY FOR PRODUCTS MARKED WITH THE FCC LOGO–UNITED STATES ONLY

This device complies with Part 15 of the FCC Rules. Operation is subject to the following two conditions: (1) this device may not cause harmful interference, and (2) this device must accept any interference received, including interference that may cause undesired operation.

For questions regarding your product, contact:

Veeder-Root Company

125 Powder Forest Drive

Simsbury, CT 06070

Or, call 1-800-323-1799

For questions regarding this FCC declaration, contact:

Veeder-Root Company

125 Powder Forest Drive

Simsbury, CT 06070

Or, call 1-800-323-1799

To identify this product, refer to the Part, Series, or Model number found on the product.

## Canadian Notice

This Class B digital apparatus meets all requirements of the Canadian Interference-Causing Equipment Regulations.

### AVIS CANADIEN

Cet appareil numérique de la classe B respecte toutes les exigences du Règlement sur le matériel brouilleur du Canada.

## Battery Warning

**WARNING: The TLS RF Wireless System Battery Pack contains lithium batteries. To reduce the risk of fire or burns, do not disassemble, crush, puncture, short external contacts, or dispose of in fire or water.**

Because of the type of batteries used in TLS RF Wireless System, follow local regulations regarding the safe disposal of the battery. Consult Appendix D of this manual for more information on battery disposal.

## Wireless Notices

In some environments, the use of wireless devices may be restricted. Such restrictions may apply aboard airplanes, in hospitals, near explosives, in hazardous locations, etc. If you are uncertain of the policy that applies to the use of this device, please ask for authorization to use it prior to turning it on.

## U.S. Regulatory Wireless Notice

**WARNING: Exposure to Radio Frequency Radiation. The radiated output power of this device is below the FCC radio frequency exposure limits. Nevertheless, the device should be used in such a manner that the potential for human contact during normal operation is minimized. To avoid the possibility of exceeding the FCC radio frequency exposure limits, human proximity to the antenna should be minimized.**

## Canadian Regulatory Wireless Notice

Operation is subject to the following two conditions: (1) this device may not cause interference, and (2) this device must accept any interference, including interference that may cause undesired operation of the device. The term “IC:” before the certification/registration number only signifies that the Industry Canada technical specifications were met.

## System Specifications

Note: Not all models described are available in all regions.

# Appendix B: Device DIP Switch Settings

## TLS RF Number Settings

The Dip Switch Locations to set the unique Device number for the TLS RF(s) are shown in the Figure B-1. The TLS RF that monitors the Receiver and Transmitter IDs 1 - 8 is considered the site's master TLS RF and must have its Device ID set to 0 (default).

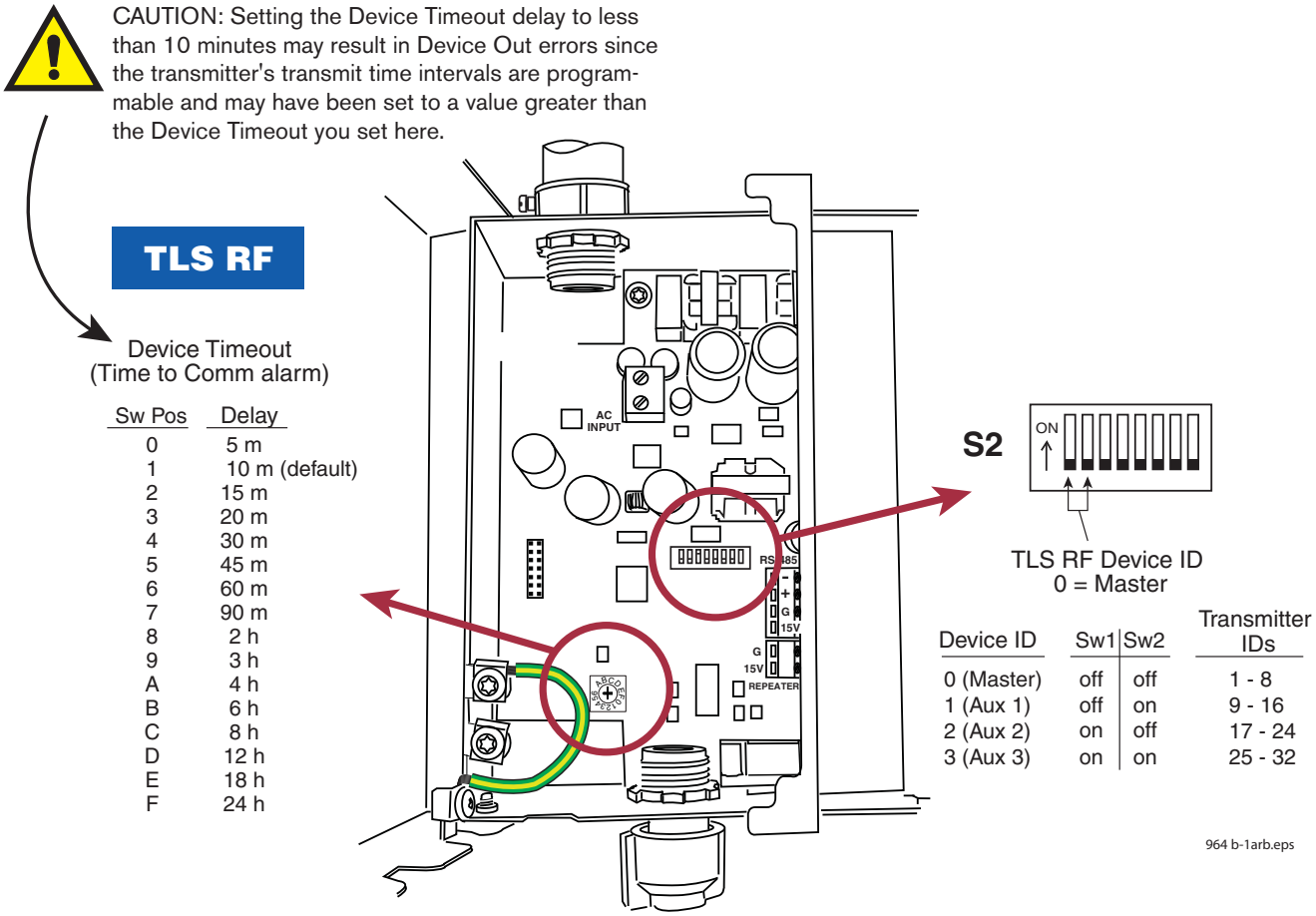


**Figure B-1. TLS-RF switch settings**

## Transmitter/Receiver/Repeater DIP Switch Settings

DIP switch locations for the Transmitter, Receiver and Repeater are shown in Figure B-2. Device DIP switch settings for these devices are listed in Figure B-3 through Figure B-6 (use the appropriate settings for your software version 1 or 3).

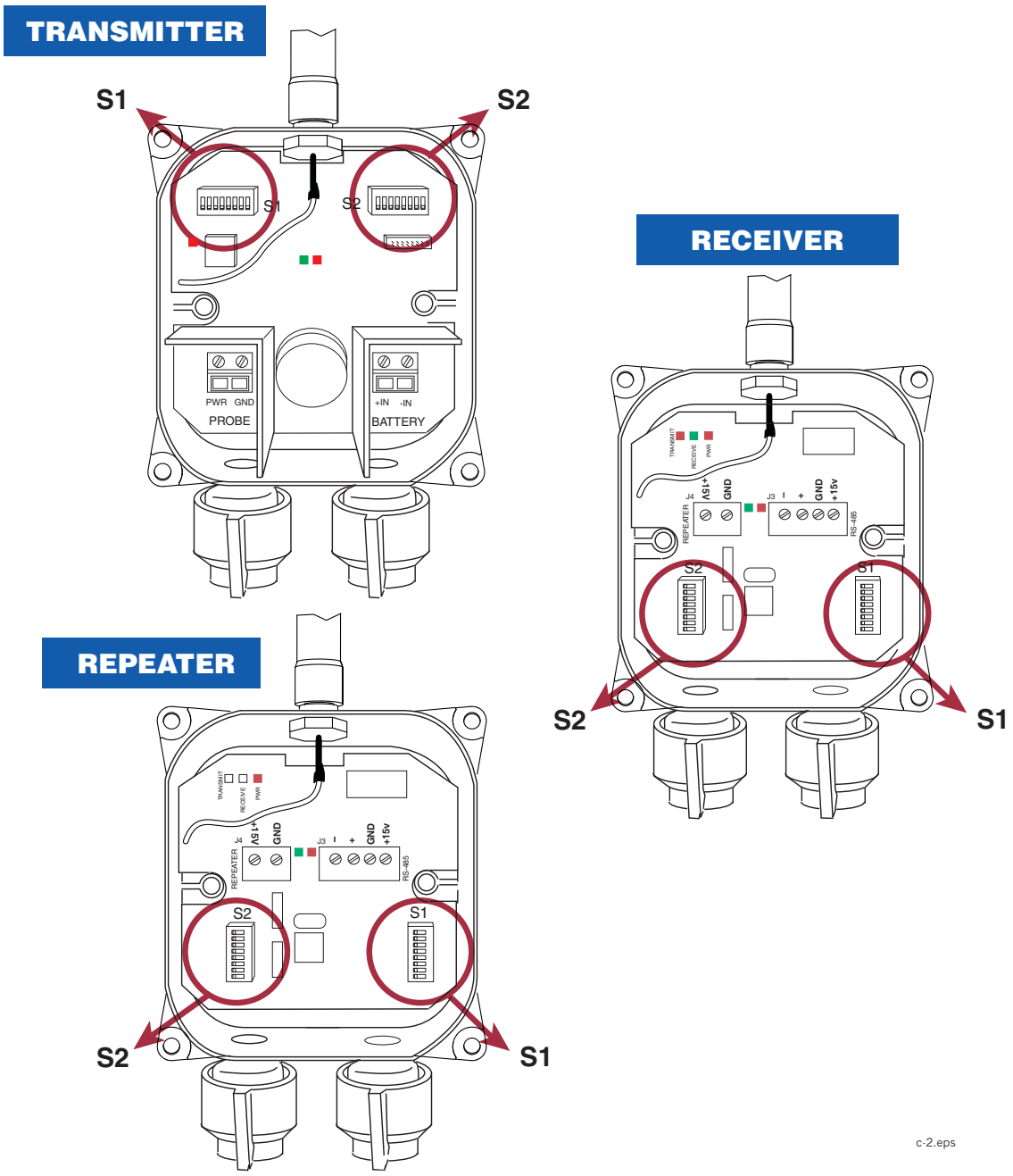


**Figure B-2. DIP switch settings**

| All Wireless 2 (W2) Transmitters | | | |
|---|---|---|---|
| S1: Positions | | | Function |
| 1 | 2 | 3 | |
| OFF | OFF | OFF | Enable Transmitter |

c-3.eps

**Figure B-3. S1: DIP switch positions 1-3 – (W2) All Devices**

| All Wireless 2 (W2) Transmitters | | | | | | | |
|---|---|---|---|---|---|---|---|
| S1: Positions | | | | | TRANSMITTER | | |
| 4 | 5 | 6 | 7 | 8 | Device Number | | |
| OFF | OFF | OFF | OFF | ON | 1 (Master TLS-RF Device 1) | Master TLS RF | |
| OFF | OFF | OFF | ON | OFF | 2 (Master TLS-RF Device 2) | Connects to | |
| OFF | OFF | OFF | ON | ON | 3 (Master TLS-RF Device 3) | Receiver | |
| OFF | OFF | ON | OFF | OFF | 4 (Master TLS-RF Device 4) | | |
| OFF | OFF | ON | OFF | ON | 5 (Master TLS-RF Device 5) | | |
| OFF | OFF | ON | ON | OFF | 6 (Master TLS-RF Device 6) | | |
| OFF | OFF | ON | ON | ON | 7 (Master TLS-RF Device 7) | | |
| OFF | ON | OFF | OFF | OFF | 8 (Master TLS-RF Device 8) | | |
| OFF | ON | OFF | OFF | ON | 9 (Aux 1 TLS-RF Device 1) | Aux 1 is the second | |
| OFF | ON | OFF | ON | OFF | 10 (Aux 1 TLS-RF Device 2) | TLS RF Console | |
| OFF | ON | OFF | ON | ON | 11 (Aux 1 TLS-RF Device 3) | | |
| OFF | ON | ON | OFF | OFF | 12 (Aux 1 TLS-RF Device 4) | | |
| OFF | ON | ON | OFF | ON | 13 (Aux 1 TLS-RF Device 5) | | |
| OFF | ON | ON | ON | OFF | 14 (Aux 1 TLS-RF Device 6) | | |
| OFF | ON | ON | ON | ON | 15 (Aux 1 TLS-RF Device 7) | | |
| ON | OFF | OFF | OFF | OFF | 16 (Aux 1 TLS-RF Device 8) | | |
| ON | OFF | OFF | OFF | ON | 17 (Aux 2 TLS-RF Device 1) | Aux 2 is the third | |
| ON | OFF | OFF | ON | OFF | 18 (Aux 2 TLS-RF Device 2) | TLS RF Console | |
| ON | OFF | OFF | ON | ON | 19 (Aux 2 TLS-RF Device 3) | | |
| ON | OFF | ON | OFF | OFF | 20 (Aux 2 TLS-RF Device 4) | | |
| ON | OFF | ON | OFF | ON | 21 (Aux 2 TLS-RF Device 5) | | |
| ON | OFF | ON | ON | OFF | 22 (Aux 2 TLS-RF Device 6) | | |
| ON | OFF | ON | ON | ON | 23 (Aux 2 TLS-RF Device 7) | | |
| ON | ON | OFF | OFF | OFF | 24 (Aux 2 TLS-RF Device 8) | | |
| ON | ON | OFF | OFF | ON | 25 (Aux 3 TLS-RF Device 1) | Aux 3 is the fourth | |
| ON | ON | OFF | ON | OFF | 26 (Aux 3 TLS-RF Device 2) | TLS RF Console | |
| ON | ON | OFF | ON | ON | 27 (Aux 3 TLS-RF Device 3) | | |
| ON | ON | ON | OFF | OFF | 28 (Aux 3 TLS-RF Device 4) | | |
| ON | ON | ON | OFF | ON | 29 (Aux 3 TLS-RF Device 5) | | |
| ON | ON | ON | ON | OFF | 30 (Aux 3 TLS-RF Device 6) | | |
| ON | ON | ON | ON | ON | 31 (Aux 3 TLS-RF Device 7) | | |
| OFF | OFF | OFF | OFF | OFF | 32 (Aux 3 TLS-RF Device 8) | | |

c-4.eps

**Figure B-4. S1: DIP switch positions 4-8 – (W2) All Devices**

| Wireless 2 (W2) Vapor Flowmeter | | | | | |
|---|---|---|---|---|---|
| S2: Positions | | | | Transmitter Interval in Seconds | |
| 1 | 2 | 3 | 4 | Read | TX |
| * → OFF | ON | OFF | OFF | 32 | 32 |

c-9.eps

* = Required settings

**Figure B-5. S2: DIP switch positions 1-4 – (W2) Vapor Flow Meter**

| Wireless 2 (W2) Transmitters, Receiver and Repeater (All Site ID settings must be the same) | | | | | | |
|---|---|---|---|---|---|---|
| S2: Positions | | | | TRANSMITTER | REPEATER[1] | RECEIVER[1] |
| 5 | 6 | 7 | 8 | Site ID | Site ID | Site ID |
| OFF | OFF | OFF | OFF | 0 | 0 | 0 |
| OFF | OFF | OFF | ON | 1 | 1 | 1 |
| OFF | OFF | ON | OFF | 2 | 2 | 2 |
| OFF | OFF | ON | ON | 3 | 3 | 3 |
| OFF | ON | OFF | OFF | 4 | 4 | 4 |
| OFF | ON | OFF | ON | 5 | 5 | 5 |
| OFF | ON | ON | OFF | 6 | 6 | 6 |
| OFF | ON | ON | ON | 7 | 7 | 7 |
| ON | OFF | OFF | OFF | 8 | 8 | 8 |
| ON | OFF | OFF | ON | 9 | 9 | 9 |
| ON | OFF | ON | OFF | 10 | 10 | 10 |
| ON | OFF | ON | ON | 11 | 11 | 11 |
| ON | ON | OFF | OFF | 12 | 12 | 12 |
| ON | ON | OFF | ON | 13 | 13 | 13 |
| ON | ON | ON | OFF | 14 | 14 | 14 |
| ON | ON | ON | ON | 15 | 15 | 15 |

c-10.eps

[1] Set all remaining dip switches (S2 1-4 and S1 1-8) to OFF for both the Repeater and Receiver.

**Figure B-6. S2: DIP switch positions 5-8 – (W2) All Devices**

# Appendix C: Lithium Battery Safety Data

This appendix contains the manufacturer supplied Transportation Certificate and Material Safety Data Sheet for the lithium batteries used in the TLS RF Wireless 2 (W2) System.

## Lithium Battery Disposal Considerations

1. Waste disposal must be in accordance with the applicable regulations.
2. Disposal of the Lithium batteries should be performed by permitted, professional disposal firms knowledgeable in Federal, State or Local requirements of hazardous waste treatment and hazardous waste transportation.
3. Incineration should never be performed by battery users, but by trained professionals in an authorized facility with proper gas and fume containment.
4. Recycling of battery can be done in authorized facility, through licensed waste carrier.

# TRANSPORTATION CERTIFICATE

**Ref. TC-LS 33600 11/2008- 87**

This is to certify that the Saft cell type, **LS 33600,** has been subjected and has met the requirements of the UN Recommendations on the Transport of Dangerous Goods, Part III, sub-section 38.3, Manual of Tests and Criteria, 4th Revised edition - 2003 - Ref. ST/SG/AC.10/11/Rev. 4), as detailed in Saft-Poitiers internal reports P 0256/03, dated 06/2003.

**Concerned Part Numbers**

All the part numbers relative to single LS 33600 cells, whatever their finish mode (with and without end-tabs or wiring and connector assemblies, etc.)

**Product Description**

Primary (non-rechargeable), Lithium-Thionyl Chloride ($Li\text{-}SOCl_2$) D-sized single cell

| | |
|---|---|
| Nominal Voltage | 3.6 Volts |
| Nominal Capacity | 17.0 Ah |
| Lithium metal content | 4.5 grams |
| Nominal energy | 17.0 x 3.6 = 61.2 Wh |
| Maximum recommended continuous discharge current | 250 mA |

**Product Classification**

**Worldwide, besides the United States of America**
Since it passes the UN-defined transport tests but because its lithium content is above the 1 gram limit, **the LS 33600 individual cell, in all of its finish versions, according to the current UN Recommendations on the Transport of Dangerous Goods - Model regulations, is declared non-exempt from the Dangerous Goods Regulations. It is restricted to transport/ assigned to Class 9**, and must be packed in accordance with the relevant packing instructions of the applicable Handbooks and Codes issued by the bodies (IATA-ICAO, IMO, ADR, US-DOT, etc.) in charge of regulating the transportation of dangerous goods.

**Within the United States of America**
The U.S. DOT CFR 49 Regulations, Parts 171, 172, 173 and 175, are governing the transportation of lithium cells and batteries. Special Provision 188 (in Part 172.102) **defines the LS 33600 single lithium metal cell, in all of its finished versions, as belonging to the *"medium primary lithium cell"* category,** and details the requirements to be met for the different transportation conditions.

**Signed on Behalf of Saft, Specialty Battery Group**

| | | | |
|---|---|---|---|
| Pascal Hans | SBG Quality Manager | dated | 23/11/08 |
| Alain Kerouanton | SBG Lithium Product Manager | dated | 23/11/2008 |

**Specialty Battery Group – Rue Georges Leclanché BP 1039 – 86060 Poitiers Cedex 09 – France**

# Material/Product Safety Data Sheet
# (MSDS-PSDS)

| LS/LSG/LSH/LST/LSX products | Lithium/Thionyl chloride single cells and multi-cell battery packs |
|---|---|
| Revision 8 Date 10/2008 | |

## 1. Identification of the Substance or Preparation and Company

| Product | Primary Lithium/Thionyl chloride unit cells and multi-cell battery packs ($Li\text{-}SOCl_2$) | | | |
|---|---|---|---|---|
| Production sites | Saft Ltd.<br>River Drive<br>Tyne & Wear<br>South Shields<br>NE33 2TR – UK<br><br>Ph. :+44 191 456 1451<br>Fax :+44 191 456 6383 | Saft<br>Rue Georges Leclanché<br>BP 1039<br>86060 Poitiers cedex 9<br>France<br><br>Ph. :+33 (0)5 49 55 48 48<br>Fax :+33 (0)5 49 55 48 50 | Saft America Inc<br>313 Crescent Street<br>Valdese<br>NC 28690 – USA<br><br>Ph. :+1 828 874 4111<br>Fax :+1 828 874 2431 | Saft Batteries Co., Ltd<br>Zhuhai Free Trade Zone<br>Lianfeng Road<br>Zhuhai 519030<br>Guangdong Province<br>China<br>Ph. : +86 756 881 9318<br>Fax : +86 756 881 9328 |
| www.saftbatteries.com (section « Contact ») | | | | |
| **Emergency contact**<br>Within the USA | +1 (703) 527 3887<br>+1 (800) 494 9300 | (CHEMTREC US Service Center) | | |

## 2. Hazards Identification

Do not short circuit, recharge puncture, incinerate, crush, immerse, force discharge or expose to temperatures above the declared operating temperature range of product. Risk of fire or explosion.

The Lithium-Thionyl chloride batteries described in this Safety Data Sheet are sealed units which are not hazardous when used according to the recommendations of the manufacturer.

Under normal conditions of use, the electrode materials and liquid electrolyte they contain are not exposed to the outside, provided the battery integrity is maintained and seals remain intact. Risk of exposure only in case of abuse (mechanical, thermal, electrical) which leads to the activation of safety valves and/or the rupture of the battery container. Electrolyte leakage, electrode materials reaction with moisture/water or battery vent/explosion/fire may follow, depending upon the circumstances.

## 3. Composition & Information on Ingredients

| Ingredient | Content | CAS No. | CHIP Classification | | |
|---|---|---|---|---|---|
| Lithium<br>*(Li)* | 3,5-5% | 7439-93-2 | | | **F**; R14/15<br>**C**; R34<br>R14/15, R21,R22, R35, R41, R43<br>S2, S8, S45 |
| Thionyl chloride<br>*($SOCl_2$)* | 40-46% | 7719-09-7 | <br> | | **C;** R14, R21, R22, R35, R37, R41,R42/43<br>S2, S8, S24, S26, S36, S37, S45 |

**MSDS $Li\text{-}SOCl_2$**
**Rev. 8 October 2008**

| | | | | | |
|---|---|---|---|---|---|
| Aluminum chloride anhydrous *($AlCl_3$)* | 1-5% | 7446-70-0 | | | R14, R22, R37, R41, R43. S2, S8, S22, S24, S26, S36, S45 |
| Carbon *($C_n$)* | 3-4% | 1333-86-4 | | | NONE KNOWN |
| *Amount varies depending on cell size.* | | | | | |

| **4. First Aid Measures** | |
|---|---|
| **Inhalation** | Remove from exposure, rest and keep warm.<br>In severe cases obtain medical attention. |
| **Skin contact** | Wash off skin thoroughly with water. Remove contaminated clothing and wash before reuse. In severe cases obtain medical attention. |
| **Eye contact** | Irrigate thoroughly with water for at least 15 minutes.<br>Obtain medical attention. |
| **Ingestion** | Wash out mouth thoroughly with water and give plenty of water to drink.<br>Obtain medical attention. |
| **Further treatment** | All cases of eye contamination, persistent skin irritation and casualties who have swallowed this substance or been affected by breathing its vapours should be seen by a doctor. |

| **5. Fire Fighting Measures** | |
|---|---|
| $CO_2$ extinguishers or, even preferably, copious quantities of water or water-based foam, can be used to cool down burning Li-$SOCl_2$ cells and batteries, as long as the extent of the fire has not progressed to the point that the lithium metal they contain is exposed (marked by deep red flames).<br>Do not use for this purpose sand, dry powder or soda ash , graphite powder or fire blankets.<br>**Use only metal (Class D) extinguishers on raw lithium.** | |
| **Extinguishing media** | Use water or $CO_2$ on burning Li-$SOCl_2$ cells or batteries<br>and class D fire extinguishing agent only on raw lithium. |

| **6. Accidental Release Measures** |
|---|
| Remove personnel from area until fumes dissipate. Do not breathe vapours or touch liquid with bare hands.<br>If the skin has come into contact with the electrolyte, it should be washed thoroughly with water.<br>Sand or earth should be used to absorb any exuded material. Seal leaking battery and contaminated absorbent material in plastic bag and dispose of as Special Waste in accordance with local regulations. |

**MSDS Li-$SOCl_2$**
**Rev. 8 October 2008**

| 7. Handling and Storage | |
|---|---|
| **Handling** | Do not crush, pierce, short (+) and (-) battery terminals with conductive (i.e. metal) goods. Do not directly heat or solder. Do not throw into fire.<br>Do not mix batteries of different types and brands. Do not mix new and used batteries. Keep batteries in non conductive (i.e. plastic) trays. |
| **Storage** | Store in a cool (preferably below 30°C) and ventilated area, away from moisture, sources of heat, open flames, food and drink.<br>Keep adequate clearance between walls and batteries.<br>Temperature above 100°C may result in battery leakage and rupture.<br>Since short circuit can cause burn, leakage and rupture hazard, keep batteries in original packaging until use and do not jumble them. |
| **Other** | Lithium-Thionyl chloride batteries are not rechargeable and should not be tentatively charged.<br>Follow Manufacturers recommendations regarding maximum recommended currents and operating temperature range.<br>Applying pressure on deforming the battery may lead to disassembly followed by eye, skin and throat irritation. |

| 8. Exposure Controls & Personal Protection | | | | | |
|---|---|---|---|---|---|
| **Occupational exposure standard** | | Compound | 8hr TWA | 15min TWA | SK |
| | | Sulfur dioxide | 1 ppm | 1 ppm | - |
| | | Hydrogen chloride | 1 ppm | 5 ppm | - |
| 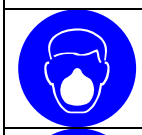 | **Respiratory protection** | In all fire situations, use self-contained breathing apparatus. | | | |
| 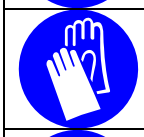 | **Hand protection** | In the event of leakage wear gloves. | | | |
| | **Eye protection** | Safety glasses are recommended during handling. | | | |
| 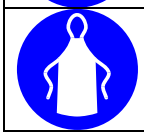 | **Other** | In the event of leakage, wear chemical apron. | | | |

| 9. Physical and Chemical Properties | |
|---|---|
| **Appearance** | Cylindrical or prismatic shape |
| **Odour** | If leaking, gives off a pungent corrosive odour. |
| **pH** | Not Applicable |
| **Flash point** | Not applicable unless individual components exposed |
| **Flammability** | Not applicable unless individual components exposed |
| **Relative density** | Not applicable unless individual components exposed |
| **Solubility (water)** | Not applicable unless individual components exposed |
| **Solubility (other)** | Not applicable unless individual components exposed |

**MSDS Li-SOCl$_2$**
**Rev. 8 October 2008**

| 10. Stability and Reactivity | |
|---|---|
| Product is stable under conditions described in Section 7. | |
| **Conditions to avoid**. | Heat above 100°C (150°C for the LSH 20-150 cells and the battery packs assembled from them) or incinerate. Deform. Mutilate. Crush. Pierce. Disassemble Recharge. Short circuit. Expose over a long period to humid conditions. |
| **Materials to avoid** | Oxidising agents, alkalis, water. Avoid electrolyte contact with aluminum or zinc. |
| **Hazardous decomposition Products** | Hydrogen ($H_2$) as well as Lithium oxide ($Li_2O$) and Lithium hydroxide (LiOH) dust is produced in case of reaction of *lithium metal* with water.<br>Chlorine ($Cl_2$), Sulfur dioxide ($SO_2$) and Disulfur dichloride ($S_2Cl_2$) are produced in case of thermal decomposition of *thionyl chloride* above 140°C.<br>Hydrochloric acid (HCl) and Sulfur dioxide ($SO_2$) are produced in case of reaction of *Thionyl chloride* with water at room temperature.<br>Hydrochloric acid (HCl) fumes, Lithium oxide, ($Li_2O$), Lithium hydroxide (LiOH) and Aluminum hydroxide ($Al(OH)_3$) dust are produced in case of reaction of *Lithium tetrachloroaluminate ($LiAlCl_4$)* with water. |

| 11. Toxicological Information | |
|---|---|
| **Signs & symptoms** | None, unless battery ruptures. In the event of exposure to internal contents, corrosive fumes will be very irritating to skin, eyes and mucous membranes. Overexposure can cause symptoms of non-fibrotic lung injury and membrane irritation. |
| **Inhalation** | Lung irritant. |
| **Skin contact** | Skin irritant |
| **Eye contact** | Eye irritant. |
| **Ingestion** | Tissue damage to throat and gastro-respiratory tract if swallowed. |
| **Medical conditions generally aggravated by exposure** | In the event of exposure to internal contents, eczema, skin allergies, lung injuries, asthma and other respiratory disorders may occur. |

| 12. Ecological Information | |
|---|---|
| **Mammalian effects** | None known if used/disposed of correctly. |
| **Eco-toxicity** | None known if used/disposed of correctly. |
| **Bioaccumulation potential** | None known if used/disposed of correctly. |
| **Environmental fate** | None known if used/disposed of correctly. |

| 13. Disposal Considerations |
|---|
| Do not incinerate, or subject cells to temperatures in excess of 100°C. Such abuse can result in loss of seal, leakage, and/or cell explosion. Dispose of in accordance with appropriate local regulations. |

**MSDS Li-$SOCl_2$**
**Rev. 8 October 2008**

| 14. Transport Information | |
|---|---|
| **Label for conveyance** | For the single cell batteries and multi-cell battery packs that are non-restricted to transport (non-assigned to the Miscellaneous Class 9), use lithium batteries inside label.<br>For the single cell batteries and multi-cell battery packs which are restricted to transport (assigned to Class 9), use Class 9 Miscellaneous Dangerous Goods and UN Identification Number labels.<br>In all cases, refer to the product transport certificate issued by the Manufacturer. |
| **UN numbers** | UN3090 (shipment of cells and batteries *in bulk*)<br>UN 3091 (cells and batteries *contained in equipment* or *packed with it*) |
| **Shipping names** | Lithium Metal Batteries |
| **Hazard classification** | Depending on their lithium metal content, some single cells and small multi-cell battery packs may be non- assigned to Class 9 (Refer to Transport Certificate) |
| **Packing group** | II |
| **Specific dispositions** | IATA: A45, A88, A99, P968, P969, P970<br>IMDG: 188, 230, 310, P903<br>ADR/RID: 188, 230, 310, 636, P903, P903a |
| **IMDG Code** | 3090 (Li Batteries) 3091 (Li Batteries contained in equipment or packed with it) |
| **CAS** | |
| **EmS No.** | F-A, S-I |
| **Marine pollutant** | No |
| **ADR Class** | Class9 |

| 15. Regulatory Information | | | |
|---|---|---|---|
| **Risk phrases** | Lithium<br>*(Li)* | R14/15<br><br>R21<br>R22<br>R35<br>R41<br>R42/43 | Reacts violently with water, liberating extremely flammable gases.<br>Harmful in contact with skin.<br>Harmful if swallowed.<br>Causes burns.<br>Risk of serious damage to eye.<br>May cause sensitization by inhalation and skin contact. |
| | Thionyl chloride<br>*($SOCl_2$)* | R14<br>R22<br>R35<br>R37<br>R41<br>R42/43 | Reacts with water.<br>Harmful if swallowed.<br>Causes burns.<br>Irritating to respiratory system.<br>Risk of serious damage to eye.<br>May cause sensitization by inhalation and skin contact. |
| | Aluminum chloride anhydrous<br>*($AlCl_3$)* | R14<br>R22<br>R37<br>R41<br>R43 | Reacts with water.<br>Harmful if swallowed.<br>Irritating to respiratory system.<br>Risk of serious damage to eye.<br>May cause sensitization by skin contact. |
| **Safety phrases** | Lithium<br>*(Li)* | S2<br>S8<br>S45 | Keep out of reach of children<br>Keep away from moisture<br>In case of incident, seek medical attention. |
| | Thionyl chloride<br>*($SOCl_2$)* | S2<br>S8<br>S24<br>S26<br><br>S36<br>S37<br>S45 | Keep out of reach of children.<br>Keep away from moisture.<br>Avoid contact with skin.<br>In case of contact with eyes, rinse immediately with plenty of water.<br>Wear suitable protective clothing.<br>Wear suitable gloves.<br>In case of incident, seek medical attention. |

**MSDS Li-$SOCl_2$**
**Rev. 8 October 2008**

| | | | |
|---|---|---|---|
| | Aluminum chloride anhydrous *($AlCl_3$)* | S2<br>S8 S22<br>S24 S26<br><br>S36 | Keep out of reach of children.<br>Keep away from moisture.<br>Do not breathe dust.<br>Avoid contact with skin.<br>In case of contact with eyes, rinse immediately with plenty of water.<br>Wear suitable protective clothing. |
| **UK regulatory references** | Classified under CHIP | | |

| **16. Other Information** |
|---|
| This information has been compiled from sources considered to be dependable and is, to the best of our knowledge and belief, accurate and reliable as of the date compiled. However, no representation, warranty (either expressed or implied ) or guarantee is made to the accuracy, reliability or completeness of the information contained herein.<br><br>This information relates to the specific materials designated and may not be valid for such material used in combination with any other materials or in any process. It is the user's responsibility to satisfy himself as to the suitability and completeness of this information for his particular use.<br><br>Saft does not accept liability for any loss or damage that may occur, whether direct, indirect, incidental or consequential, from the use of this information. Saft does not offer warranty against patent infringement. |

Signature

Alain Kerouanton
Lithium Product Manager

**MSDS Li-$SOCl_2$**
**Rev. 8 October 2008**

VEEDER-ROOT

For technical support, sales or other assistance, please visit: www.veeder.com