State of California
AIR RESOURCES BOARD

EXECUTIVE ORDER VR-202-R

Relating to Certification of Vapor Recovery Systems

Assist Phase II Enhanced Vapor Recovery (EVR) System including In-Station Diagnostics (ISD)

WHEREAS, the California Air Resources Board (ARB) has established, pursuant to California Health and Safety Code Sections 25290.1.2, 39600, 39601, and 41954, certification procedures for systems designed for the control of gasoline vapor emissions during motor vehicle fueling operations (Phase II EVR system) in its Certification Procedure for Vapor Recovery Systems at Gasoline Dispensing Facilities (CP-201) as last amended January 9, 2013, incorporated by reference in Title 17, California Code of Regulations, Section 94011;

WHEREAS, ARB has established, pursuant to California Health and Safety Code Sections 39600, 39601, 39607, and 41954, test procedures for determining the compliance of Phase II vapor recovery systems with emission standards;

WHEREAS, Franklin Fueling Systems, Inc. (FFS) requested and was granted certification of the Healy Phase II EVR System including ISD pursuant to the CP-201 on August 31, 2005, by Executive Order VR-202-A, and last modified on September 24, 2014, by Executive Order VR-202-Q;

WHEREAS, FFS requested an amendment of the Assist Phase II EVR System Executive Order VR-201 to include the Healy Model 75 Series low permeation hose assembly as an alternate component;

WHEREAS, Veyance Technologies, Inc. requested an amendment of the Assist Phase II EVR System Executive Order VR-201 to use the Veyance Technologies name and trademark in lieu of the Goodyear name and trademark for branding of its low permeation hose assembly;

WHEREAS, CP-201 provides that the ARB Executive Officer shall issue an Executive Order if he or she determines that the vapor recovery system conforms to all of the applicable requirements set forth in CP-201;

WHEREAS, Executive Order G-01-032 delegates to the Chief of the Monitoring and Laboratory Division the authority to certify or approve modifications to certified Phase I and Phase II vapor recovery systems for gasoline dispensing facilities (GDF); and

WHEREAS, I, Michael T. Benjamin, Chief of the Monitoring and Laboratory Division find that the Assist Phase II EVR System including ISD conforms with all requirements set forth in

CP-201, including compatibility when fueling vehicles equipped with onboard refueling vapor recovery systems, and results in a vapor recovery system which is at least 95 percent efficient and does not exceed 0.38 pounds of hydrocarbons per 1,000 gallons of gasoline transferred when tested pursuant to TP-201.2, Efficiency and Emission Factor for Phase II Systems (July 26, 2012).

NOW, THEREFORE, IT IS HEREBY ORDERED that the Assist Phase II EVR System including ISD is certified to be at least 95 percent efficient and does not exceed 0.38 pounds of hydrocarbon per 1,000 gallons of gasoline transferred in attended and/or self-service mode when used with an ARB-certified Phase I vapor recovery system and installed, operated, and maintained as specified herein and in the following exhibits. Exhibit 1 contains a list of the equipment certified for use with the Assist Phase II EVR System including ISD. Exhibit 2 contains the performance standards, specifications, typical installation drawings, and maintenance intervals applicable to the Assist Phase II EVR System including ISD as installed in a GDF. Exhibit 3 contains the manufacturing specifications. Exhibit 4 is the test procedure for verifying performance of the Healy Clean Air Separator. Exhibit 5 is the vapor to liquid ratio test procedure for verifying performance of the Healy 900 Nozzle. Exhibit 6 is the manufacturer warranties. Exhibit 7 is the nozzle bag test procedure. Exhibit 8 provides Required Items in conducting TP-201.3. Exhibit 9 is the Veeder-Root ISD Operability Test Procedure. Exhibit 10 is the INCON ISD Operability Test Procedure. Exhibit 11 is the procedure for verifying performance of the Liquid Condensate Trap. Exhibit 12 is the Veeder-Root Maintenance Tracker (optional). Exhibit 13 is the below-grade vaulted tank configuration.

IT IS FURTHER ORDERED that compliance with the applicable certification requirements, rules and regulations of the Division of Measurement Standards of the Department of Food and Agriculture, the Office of the State Fire Marshal of the Department of Forestry and Fire Protection, the Division of Occupational Safety and Health of the Department of Industrial Relations, and the Division of Water Quality of the State Water Resources Control Board are made conditions of this certification.

IT IS FURTHER ORDERED that each component manufacturer listed in Exhibit 1 shall provide a warranty for the vapor recovery components to the initial purchaser. The warranty shall be passed on to each subsequent purchaser within the warranty period. The warranty shall include the ongoing compliance with all applicable performance standards and specifications and shall comply with all warranty requirements in Section 16.5 of CP-201. Manufacturers may specify that the warranty is contingent upon the use of trained installers. The manufacturer warranty tag, included with each component, shall be provided to the service station owner/operator at the time of installation.

IT IS FURTHER ORDERED that every certified component manufactured by FFS, Veyance Technologies, Veeder-Root, and VST shall meet the manufacturing performance specifications as provided in Exhibit 3.

IT IS FURTHER ORDERED that the certified Assist Phase II EVR System including ISD shall be installed, operated, and maintained in accordance with the ARB Approved Installation, Operation, and Maintenance Manual. Equipment shall be inspected weekly, quarterly, and

annually per the procedures identified in the ARB Approved Installation, Operation, and Maintenance Manual. These inspections shall also apply to systems certified by Executive Orders VR-202-A through Q. A copy of this Executive Order and the ARB Approved Installation, Operation and Maintenance Manual shall be maintained at each GDF where an Assist Phase II EVR System including ISD is installed.

IT IS FURTHER ORDERED that equipment listed in Exhibit 1, unless exempted, shall be clearly identified by permanent identification number showing the manufacturer's name and model number.

IT IS FURTHER ORDERED that any alteration in the equipment parts, design, installation, or operation of the system provided in the manufacturers' certification application or documents and certified hereby is prohibited and deemed inconsistent with this certification, unless the alteration has been submitted in writing and approved in writing by the ARB Executive Officer or his delegate.

IT IS FURTHER ORDERED that the following requirements are made a condition of certification. The owner or operator of the Assist Phase II EVR System including ISD shall conduct and pass the following tests no later than 60 days after startup and at least once in each 12 month period, using the following test procedures. Shorter time periods may be specified by the District.

- TP-201.3, Determination of 2 Inch WC Static Pressure Performance of Vapor Recovery Systems of Dispensing Facilities (July 26, 2012);
- Exhibit 8, Required Items in Conducting TP-201.3;
- Exhibit 4, Determination of Static Pressure Performance of the Healy Clean Air Separator;
- Exhibit 5, Vapor to Liquid Volume Ratio;
- Exhibit 9 or Exhibit 10, Veeder-Root or INCON ISD Operability Test Procedures;
- Exhibit 11, Liquid Condensate Trap Compliance Test Procedure (if applicable).

Districts may specify the sequencing of the above tests. Notification of testing, and submittal of test results, shall be done in accordance with District requirements and pursuant to policies established by that District. Districts may require the use of alternate test form(s), provided they include the same minimum parameters identified in the datasheet referenced in the test procedure(s). Alternative test procedures, including most recent versions of the test procedures listed above, may be used if determined by the ARB Executive Officer or his delegate, in writing, to yield equivalent results.

IT IS FURTHER ORDERED that the following requirements are made a condition of certification. The owner or operator of the Assist Phase II EVR System including ISD shall conduct, and pass, the following tests no later than 60 days after startup using Exhibit 7, Nozzle Bag Test Procedure. TP-201.4, Dynamic Back Pressure (July 3, 2002), shall be conducted in accordance with the conditions listed in item 1 of the Vapor Recovery Piping Configurations Section of Exhibit 2. Districts have the authority to require conducting of Exhibit 5, Vapor to Liquid Volume Ratio, in lieu of TP-201.4, Dynamic Back Pressure (July 3, 2002), provided that at least two gallons of product are introduced into the system

through each dispenser riser prior to conducting the test. Notification of testing, and submittal of test results, shall be done in accordance with District requirements and pursuant to the policies established by that District. Districts may require the use of alternate test form(s), provided they include the same minimum parameters identified in the datasheet referenced in the test procedure(s). Alternative test procedures, including most recent versions of the test procedures listed above, may be used if determined by the ARB Executive Officer or his delegate, in writing, to yield equivalent results.

IT IS FURTHER ORDERED that, except as provided above, Districts at their discretion will specify the testing, related sequencing, and testing frequency of the nozzle vapor valves. If nozzle vapor valve tests are required by the District, the test shall be conducted in accordance with Exhibit 7, Nozzle Bag Test Procedure.

IT IS FURTHER ORDERED that the Assist Phase II EVR System including ISD shall be compatible with gasoline in common use in California at the time of certification. The Assist Phase II EVR System including ISD is not compatible with gasoline containing more than 15 percent methanol, 15 percent ethanol, or 15 percent methyl tertiary butyl ether. Any modifications to comply with future California gasoline requirements shall be approved in writing by the ARB Executive Officer or his delegate.

IT IS FURTHER ORDERED that the certification of the Assist Phase II EVR System including ISD is valid through September 1, 2015.

IT IS FURTHER ORDERED that Executive Order VR-202-Q issued on September 24, 2014, is hereby superseded by this Executive Order. Healy Phase II EVR Systems including ISD certified under Executive Order VR-202-A through Q may remain in use at existing installations up to four years after the expiration date of this Executive Order when the certification is not renewed. Veeder-Root ISD version 1.01 shall not remain in use after July 1, 2012, for multi-product dispensers with fuel blending, and INCON ISD versions 1.0.0 and 1.1.0 shall not remain in use after January 1, 2014, for multi-hose dispensers.

IT IS FURTHER ORDERED that this Executive Order shall apply to new installations or major modifications of Phase II Systems with a throughput of more than 600,000 gallons per year and replacements of Veeder-Root or INCON ISD at existing gasoline dispensing facilities. The installation of the ISD System is not authorized on a GDF with a throughput of less than or equal to 600,000 gallons per year.

Executed at Sacramento, California this 8th day of December 2014.

Michael T. Benjamin, Chief
Monitoring and Laboratory Division

Attachments: Next Page

Attachments:

Exhibit 1	Equipment List
Exhibit 2	System Specifications
Exhibit 3	Manufacturing Performance Standards and Specifications
Exhibit 4	Determination of Static Pressure Performance of the Healy Clean Air Separator
Exhibit 5	Vapor to Liquid Volume Ratio
Exhibit 6	Manufacturer Warranties
Exhibit 7	Nozzle Bag Test Procedure
Exhibit 8	Required Items in Conducting TP-201.3
Exhibit 9	Veeder-Root ISD Operability Test Procedure
Exhibit 10	INCON VRM Operability Test Procedure
Exhibit 11	Liquid Condensate Trap Compliance Test Procedure
Exhibit 12	Veeder-Root Maintenance Tracker (Optional)
Exhibit 13	Below-Grade Vaulted Tank Configuration

Executive Order VR-202-R
Assist Phase II EVR System
Including In-Station Diagnostic (ISD) Systems

Exhibit 1
EQUIPMENT LIST

SECTION I
Part 1 - Equipment List

Component	Manufacturer/Model
Nozzle	Healy Model 900 (Figures 1-1 and 1-2) Note: Nozzle can have either a two position or three position hold open clip (see Figure 1-1)
Clean Air Separator	Healy Model 9961 Clean Air Separator (Figures 1-3 and 1-4) Healy Model 9961H Clean Air Separator (Figures 1-3H and 1-4H)
Inverted Coaxial[1] Hoses	Healy Model 75 Series (3/4" I.D.) Low Permeation Hose (Figure 1-5a) 75W-XXX-YZYZ-LP Where: W represents color of hose (varies) Note: Product label will have an "X" in this position for all hose colors XXX represents hose length First two digits for length in feet Last digit - length in tenths of foot Note: Product label will have "XXX" in this position for hose length Y represents hose end type S = Swivel End F = Fixed End Z represents thread type 2 = Healy Straight Thread 3 = Metric Thread 4 = Balance-Type Thread

[1] Facilities operating under Executive Order VR-202 revisions A thru P may continue to use hoses listed in those Executive Orders until ARB has determined that low permeation hoses are commercially available for use at these facilities.

Component	Manufacturer/Model
	Veyance Futura HVR Low Perm Series Hose (3/4" I.D) (Figure 1-5b) 532-33W-X24-0YYZZ Where: W = specifies hose color (varies) X = specifies fitting combination 2 = S2S2 3 = S3F2 4 = S4F2 5 = F2F2 6 = F3F2 7 = S2F2 8 = S4S2 Y = specifies hose length in feet Z = specifies hose length in tenths of feet
Dispenser Conversion Adaptors (Optional)[2]	Healy Model CX6-A (Required on Gasboy, Global Century, Reliance and Select Dispensers) Healy Model CX6-VV1A* Healy Model CX6-VV2A* Healy Model CX6-VV3A EBW Model 303-301-01 (Figures 1-8 and 1-9) Note: Items marked with asterisk (*) are no longer manufactured, but may be used for dispenser retrofit.
Reconnectable Breakaway Coupling	Healy Model 8701VV (Figure 1-10a) Healy Model 807 Swivel (Figure 1-10b) Catlow Model CTMCA (grey cover) (Figure 1-10c) VST Model VST-HEVR-SBK (Figure 1-10d)
Flow Limiter[3]	Healy Model 1301 (Figures 1-11 and 1-12) Healy Model 1302 (Figures 1-13 and 1-14)

[2] If optional components are installed or required by regulations of other agencies, the components and model numbers manufactured by Franklin Fueling Systems may be used to facilitate installation. The use of dispenser conversion adaptors not listed above may be used to facilitate installation provided that all applicable performance standards are met.

[3] Flow limiter is mandatory when the flow rate is greater than 10.0 gallons per minute to comply with US EPA requirement. 1301 is used with 8701VV breakaway. 1302 is used with 807 swivel breakaway.

Component	Manufacturer / Model

Dispenser Vacuum Pump

Healy Model VP1000 Vacuum Pump
Healy/Franklin Electric Model VP1000 Vacuum Pump
(Figure 1-15)

Control Module

Healy Model MC 100
(Figure 1-16)

Dispensers

Note: Unihose dispensers shall be required unless as provided by Section 4.10 of CP-201.

Gilbarco Encore Series[4]

Healy Kit VP1000R[5] or VP1000S[6]

Model#'s	Description:
NAO	Encore 1 Grade Multi-hose
NA1	Encore 2 Grade Multi-hose
NA2	Encore 3 Grade Multi-hose
NA3	Encore 4 Grade Multi-hose
NG0	Encore 3 Grade Single-Hose
NG1	Encore 4 Grade Single-Hose plus 1
NG4	Encore 2 Grade Single-Hose
NJ0	Multi-hose Blender
NJ2	Multi-hose Blender plus
NL0 NL1 NL2 NL3	Encore X+1 Blender
NN0 NN1 NN2 NN3	Encore X+0 Blender

GasBoy 9800 Series (Gilbarco)

Healy Kit VP1000M[7]

Model#'sDescription:
9852 – Suffix1 Suffix2
9853 – Suffix1 Suffix2
Where:
Suffix1 can be:
A = Factory fabrication and assembly modifications to chassis

[4] Encore Dispensers factory equipped with Healy VP1000 will now have an angled (~13°) outlet casting.
[5] Kit used to install Healy components in Encore Balance series dispenser. VP1000R previously sold as equivalent to VP1000L.
[6] Kit used to install Healy components in Encore Assist series dispenser. VP1000S previously sold as equivalent to VP1000K.
[7] Kit used to install Healy components in GasBoy 9800 series dispenser

Component **Manufacturer / Model**

HC = High capacity model
M = Manifold supply inlet at the pumping unit inlet
TW1 = Manifold supply inlet
TW2 = Two individual supply inlets
X = Dispenser supplied by a submersible pump
Q = Utilizes an alternate meter and Pump

Suffix2 can be:

B = Battery back-up for electronics
C = Pump Interface
D = DC conduit and junction box
F = Fuel filter
G = Imperial gallons registration
H = High hose retriever
I = Internal hose retriever
L = Lighted panel
N = Equipped to handle a long spout nozzle
P = Satellite dispenser as part of the unit (for connection to a master pump)
PP = Solenoid valves (optional only on pumps)
R = Liters registration
S = Piping for connection to satellite
SS = Stainless steel panels
SSA = Equipped with stainless steel doors
SSTS = Stainless steel tops and doors
T = Mechanical totalizer
U = Submersible drive relays
W = Heater
Y = Vapor recovery ready
Z = Front Load Nozzle
2 = 230 VAC/60hz operation
3 = 230 VAC/60hz operation with 380VAC/60hz motor (available on all models except 9852Q)
25 = 230VAC/50hz operation
35 = 230VAC/50hz operation with 380VAC/50hz motor
4 = RS-485 interface
5 = 50hz operation
7 = Electronic totalizer activator on

Component **Manufacturer / Model**

both sides
9 = Provided with 900-R Series TopKat

Wayne Harmony Series

Healy Kit VP1000N[8] or VP1000Q[9]

Model#'s Description:
prefix/VXXXYZ/suffix
Where:
prefix = Any number or letter (with a possible "H" for Harmony)
V = Vista
X = Any digit
Y = D or P
D = remote dispenser type for delivering fuel
P = suction pump for delivering fuel
Z = 1, 3, 4, 5, 6, 7 or 8
suffix = D1 or D2, and any combination of number(s) or letter(s)

Wayne Ovation Series

Healy Kit VP1000P[10]

Model#'s Description:
XYZ/ABC
Where:
X = B or R
B = Blended Dispenser
R = Regular Dispenser
Y = Number of hoses per side
1 = one hose per side
2 = two hoses per side
Z = Number of inlets per side
1 = one inlet
2 = two inlets
3 = three inlets
A = Number of grades
1 = one grade
2 = two grades

[8] Kit used to install Healy components to Harmony Balance series dispenser
[9] Kit used to install Healy components to Harmony Assist series dispenser
[10] Kit used to install Healy components to Ovation Balance or Assist series dispenser. VP1000P previously sold as equivalent to VP1000C.

Component **Manufacturer / Model**

3 = three grades
4 = four grades
5 = five grades
B = Number of sides
1 = one side
2 = two sides
C = Number of columns
1 = one column
2 = two columns

Wayne Vista Series

Healy Kit VP1000T[11] & VP1000V[12]

Model#'s Description:
prefix/VXXXYZ/suffix
Where:
Prefix= Any number or letter
V = Vista
X = Any digit
Y = D or P
D = remote dispenser type for delivering fuel
P = suction pump for delivering fuel
Z = 1, 3, 4, 5, 6, 7 or 8
Suffix= D1 or D2, and any combination of number(s) or letter(s)

Wayne Global Century & Select Series[13]

Model#'s Description
3/GABCDE/Suffix
Where:
A = Model Series
2 = Global Century
7 = Select
B = Cabinet Style
2 = Column Style
C = Flow Rate Capacity
0 = Standard Flow
4 = Twin I, Dual Filters

[11] Kit used to install Healy components to 3V and 4V Vista series dispenser. VP1000T previously sold as equivalent to VP1000C.
[12] Kit used to install Healy components to 1V and 2V Vista series dispenser. VP1000V previously sold as equivalent to VP1000F.
[13] Dispenser configuration only available for purchase from Dresser Wayne. There is no Kit for retrofit of these dispenser types.

Component	Manufacturer / Model

D = Number of Hoses & Orientation
- 1 = Single, Island-Oriented
- 2 = Twin I, Island-Oriented
- 3 = Twin II, Island-Oriented
- 7 = Twin I, Lane-Oriented OR Single Side, Lane-Oriented w/ "R" Suffix
- 8 = Twin II, Lane-Oriented

E = Dispenser Type
- D = Dispenser-Remote

Suffix = Any combination of letters or numbers

Wayne Reliance Series[14]

Model#'s /GABCDE/Suffix	Description

Where:

A = Model Series
- 5 = Reliance Mechanical Fleet – Pricing
- 6 = Reliance Mechanical Fleet – Volume Only

B = Cabinet Style
- 2 = Column Style

C = Flow Rate Capacity
- 0 = Standard Flow

D = Number of Hoses & Orientation
- 1 = Single, Island-Oriented
- 2 = Twin I, Island-Oriented
- 3 = Twin II, Island-Oriented

E = Dispenser Type
- D = Dispenser-Remote

Suffix = Any combination of letters or numbers

[14] Dispenser configuration only available for purchase from Dresser Wayne. There is no Kit for retrofit of this dispenser type.

Component	Manufacturer / Model	
	FFS/Healy Universal Retrofit Manual[15]	
	Healy Kits	VP1000A[16] VP1000D[17] VP1000G[18] VP1000H[19] VP1000J[20] Z071V[21] Z070E[22] Z008[23] Z009[24]

TABLE 1
Components Exempt from Identification Requirements

Component Name	Manufacturer	Model Number
Dispenser Kit	Healy	VP1000A & VP1000B VP1000D VP1000G VP1000H VP1000J VP1000M VP1000N VP1000P VP1000Q VP1000R VP1000S VP1000T VP1000V Z008 Z009 Z070E Z071V

[15] Any dispenser not currently listed in Exhibit 1 can be upgraded to Healy EVR using one of the kits listed in this section.
[16] Kit contains Universal Wire Harness for use in any dispenser make or model. For use with any VAC or VDC solenoid valves. VP1000A previously sold as equivalent to VP1000B.
[17] Early Gilbarco Encore 300 Blender Dispensers – 120 VAC valves (mfg. before 04/2003).
[18] Wayne DL Non-Blender Dispensers – 120 VAC valves.
[19] Tokheim Premier C Blender Dispensers – 24 VDC valves.
[20] Early Tokheim Blender Dispensers – Combination 120 VAC & 24 VDC valves.
[21] Universal Vapor Kit.
[22] Universal Electrical Kit.
[23] Standard Low Profile Single Hose Dispenser Retrofit Kit.
[24] Standard Low Profile Dual Hose Dispenser Retrofit Kit.

Maintenance Tracker Kit (Optional)

Veeder-Root 330020-546

Consists of the following:

- Maintenance Tracker Technician Key (Figure 1-17)
- Interface Module RS232/485 Dual Module with DB9 Converter or Single Port Module with DB-25 converter (Figure 1-18)
- Manual

Healy Model 900 EVR Nozzle

FIGURE 1-1
Healy Model 900 EVR Nozzle
(Drawing)

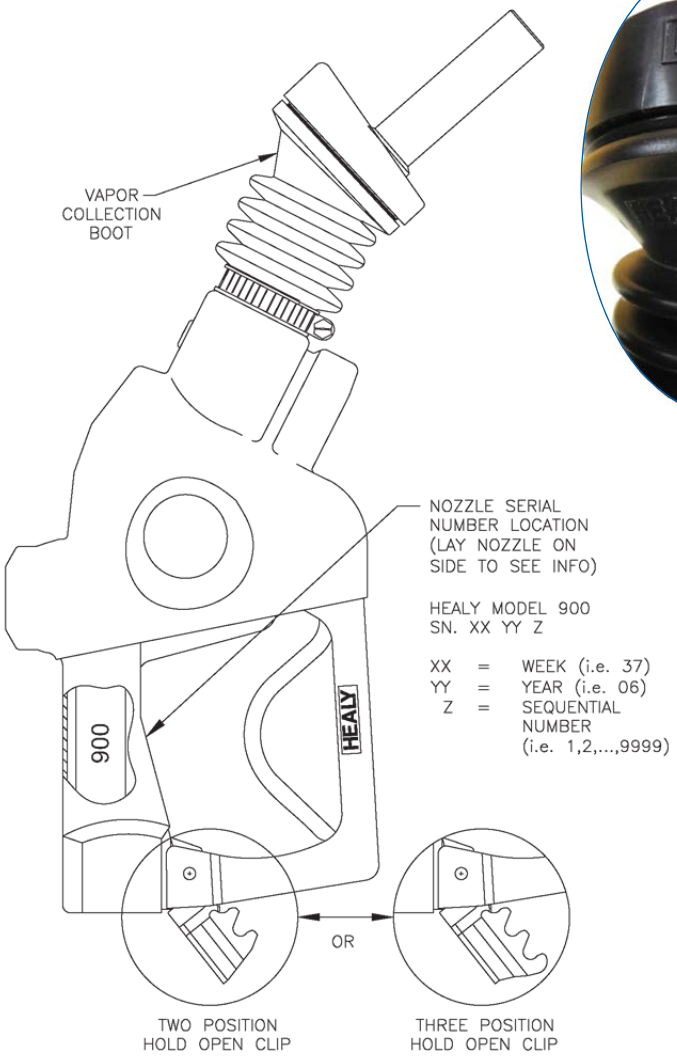

FIGURE 1-2
Healy Model 900 EVR Nozzle
(Image)

FIGURE 1-3
Healy Model 9961 Clean Air Separator

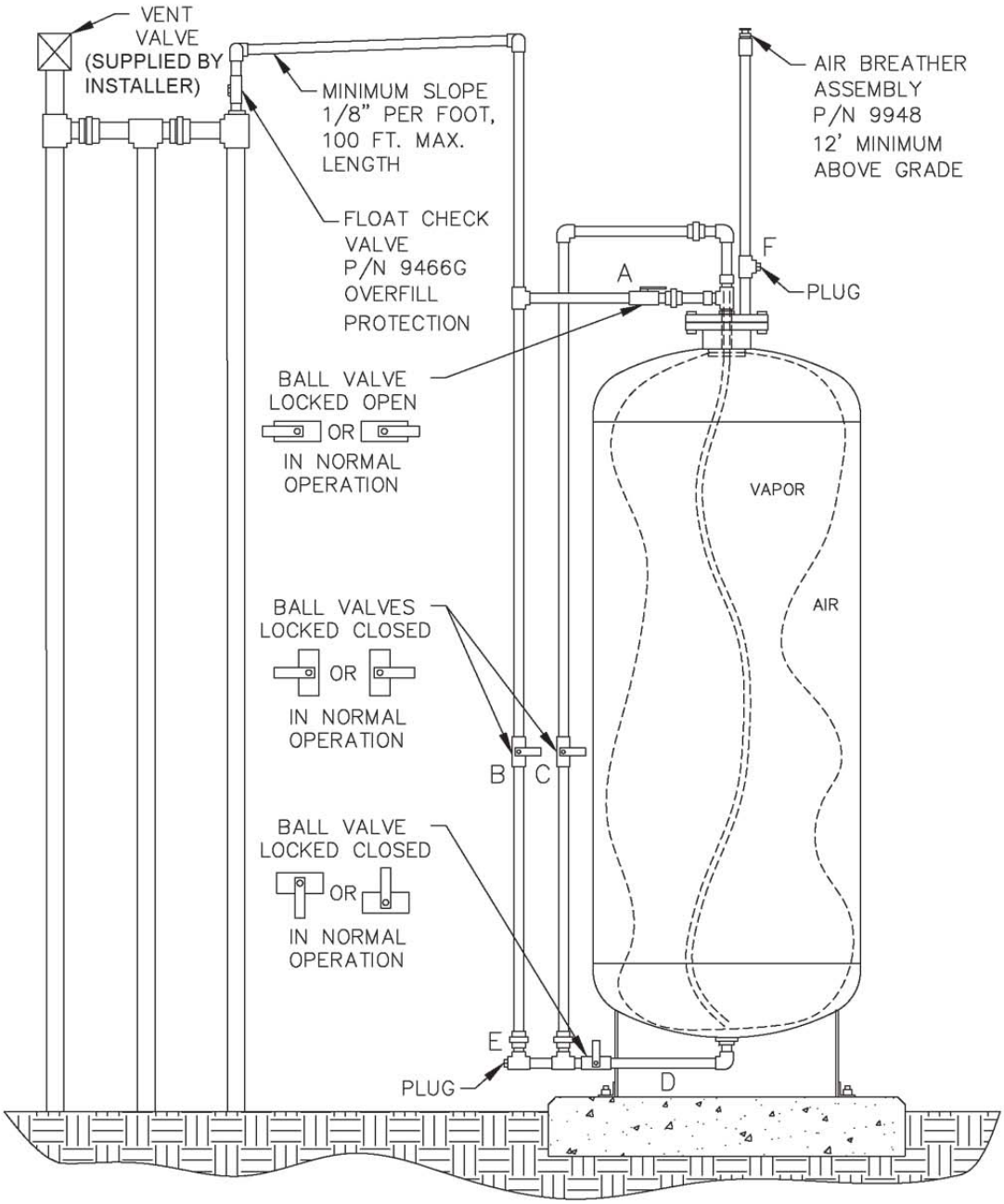

FIGURE 1-3H
Healy Model 9961H Clean Air Separator

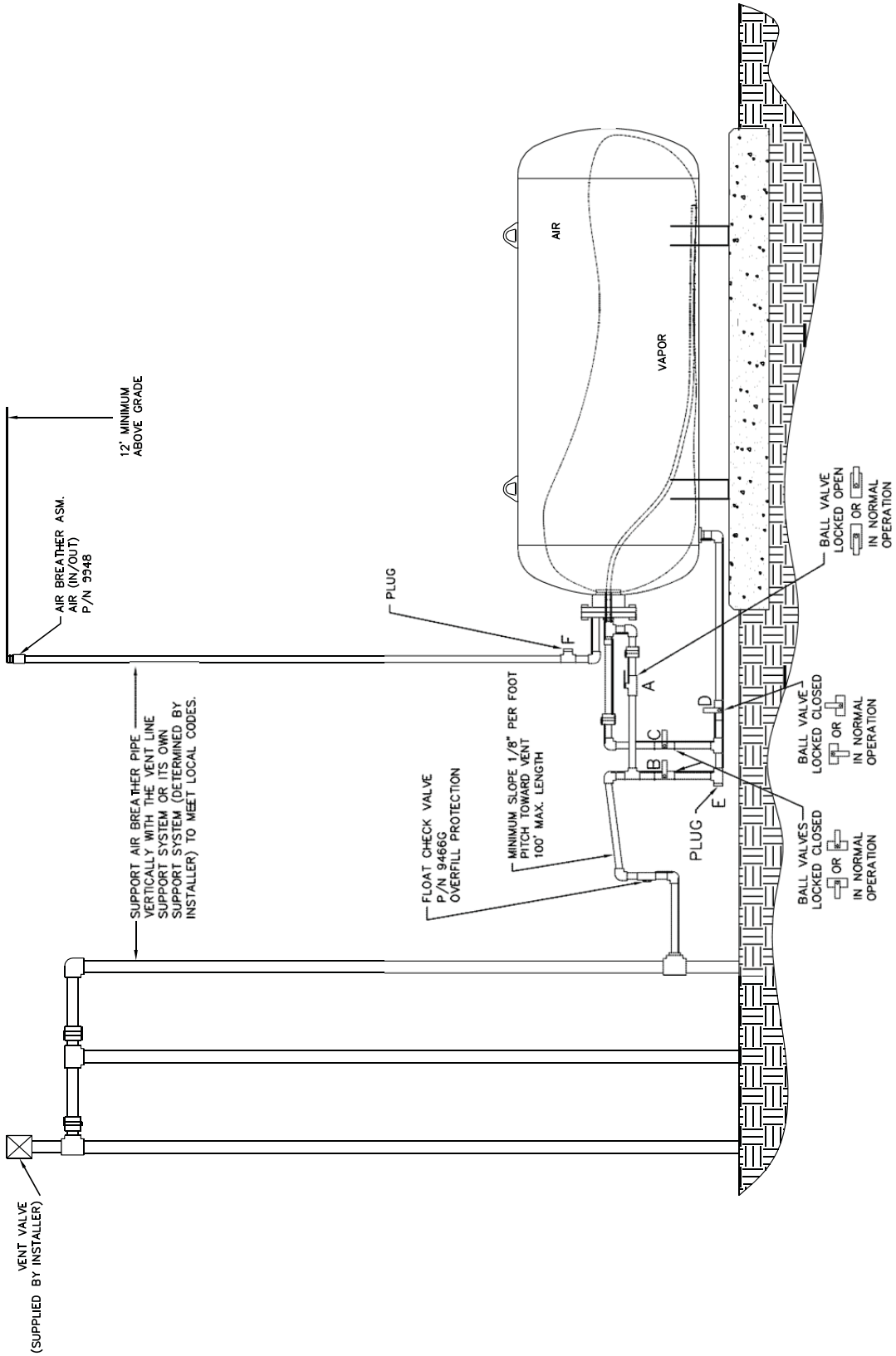

FIGURE 1-4
Healy Model 9961 Clean Air Separator

FIGURE 1-4H
Healy Model 9961-H Clean Air Separator

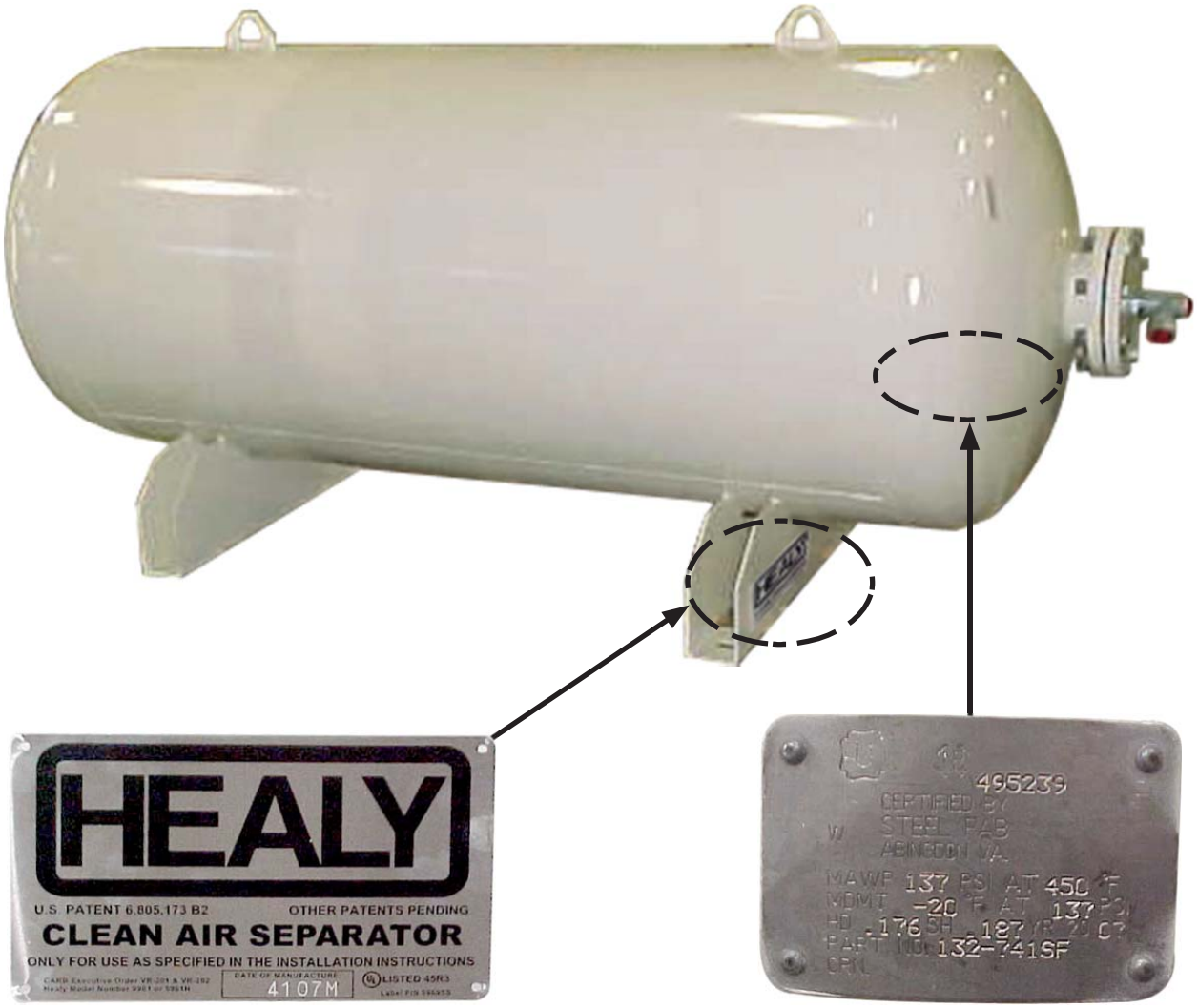

Clean Air Separator Name Plate

Clean Air Separator Data Plate
(not pictured on far side of base)

Figure 1-5a
Healy Model 75 Series Low Permeation Hose Assembly

Figure 1-5b
Veyance Futura HVR Low Perm Series Hose

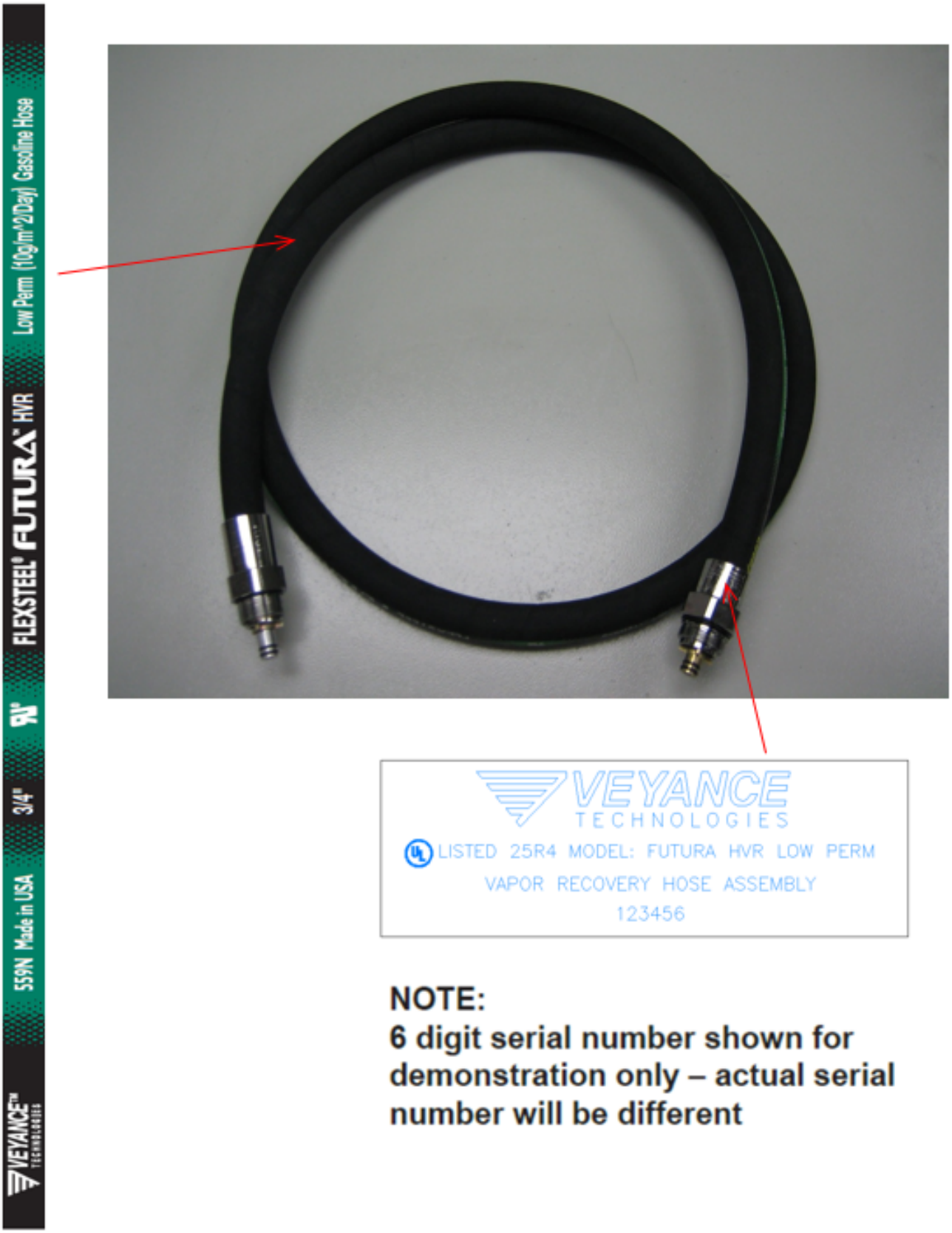

NOTE:
6 digit serial number shown for demonstration only – actual serial number will be different

FIGURE 1-6
Hanging Hardware Selection Options
Breakaway and 1301 Flow Limiter

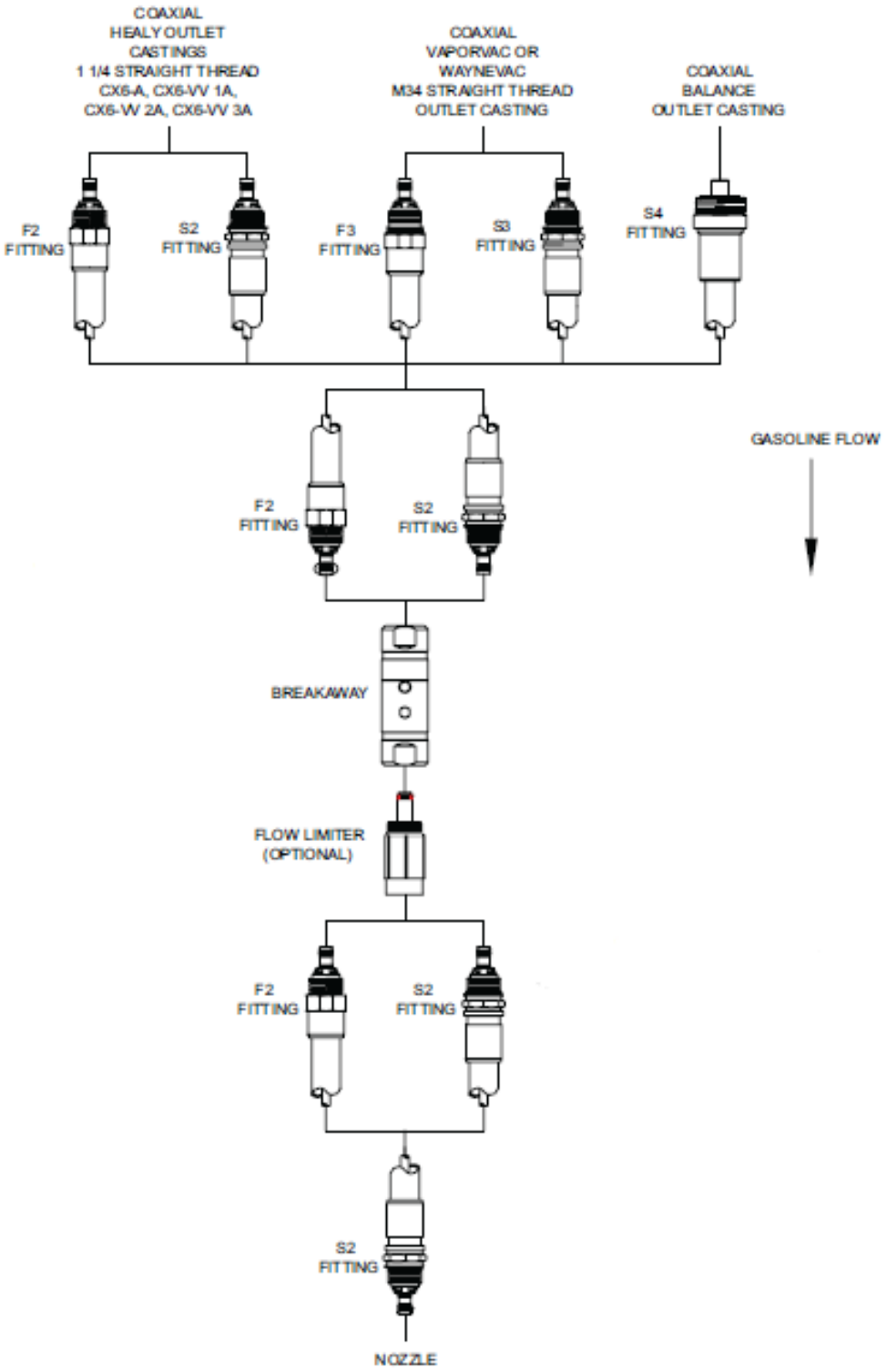

FIGURE 1-7
Hanging Hardware Selection Options
Model 807 Swivel Breakaway and 1302 Flow Limiter

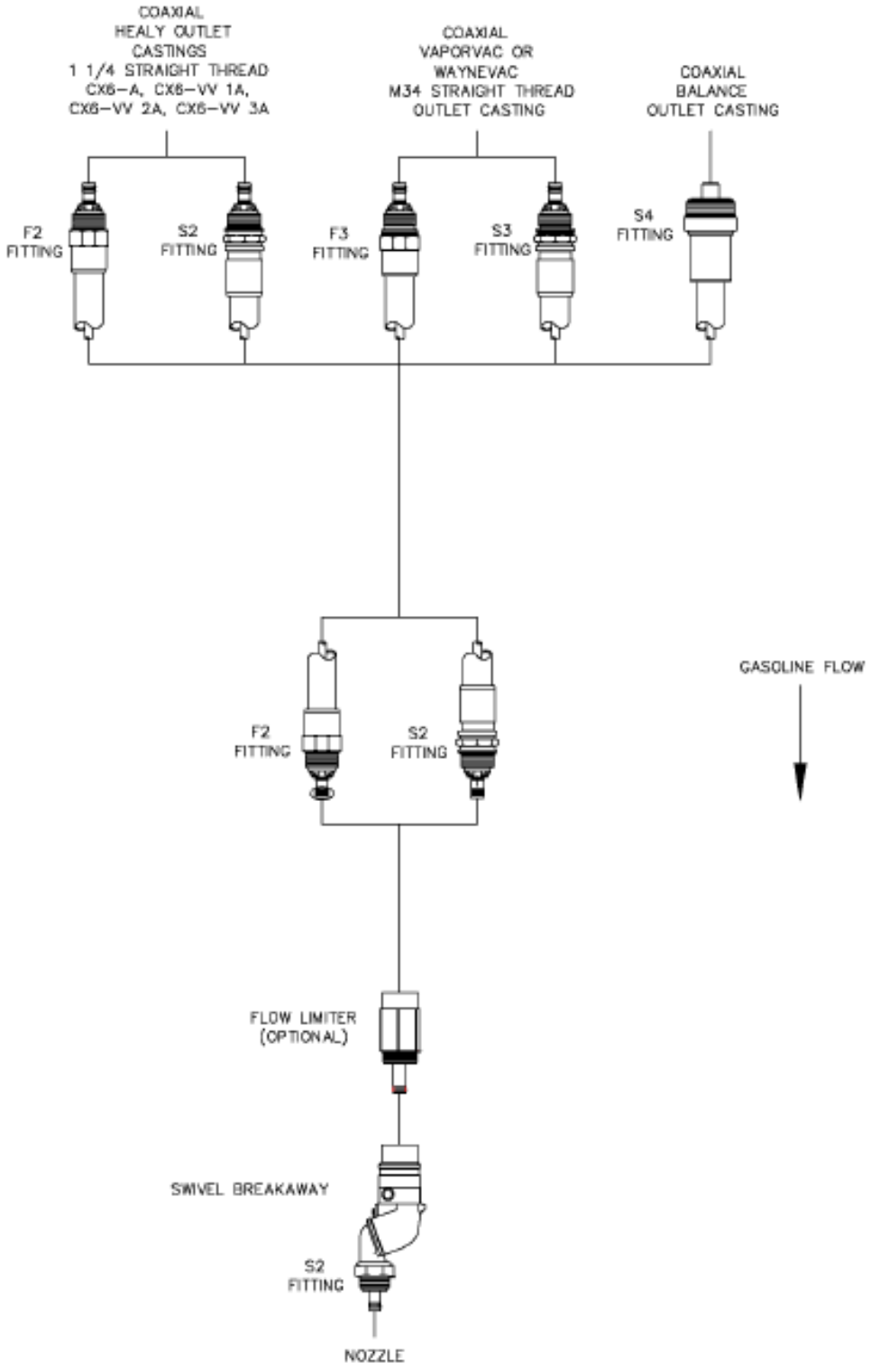

Dispenser Conversion Adaptors

FIGURE 1-8
Healy Model CX6-A

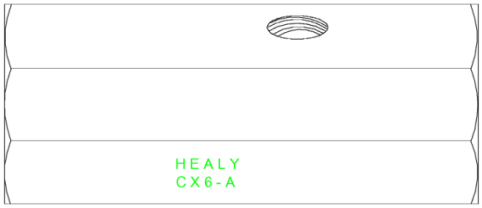

FIGURE 1-8
Healy Model CX6-A

FIGURE 1-8
Healy Model CX6-VV1A

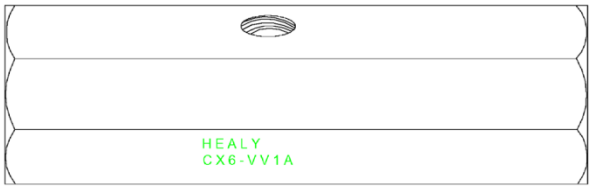

FIGURE 1-8
Healy Model CX6-VV2A

Dispenser Conversion Adaptors

FIGURE 1-9
Healy Model CX6-VV3A

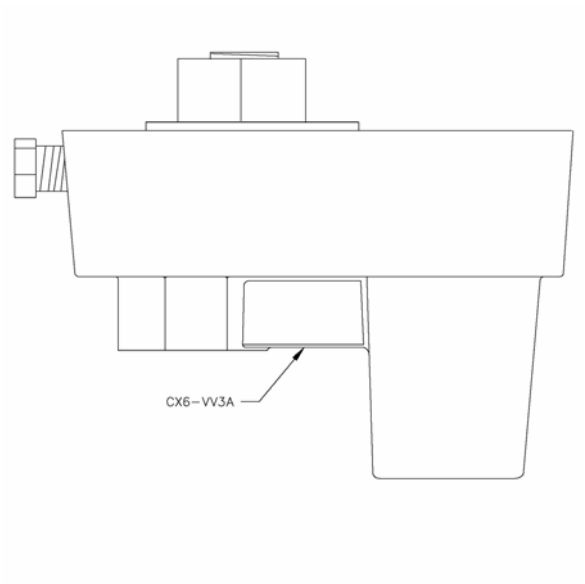

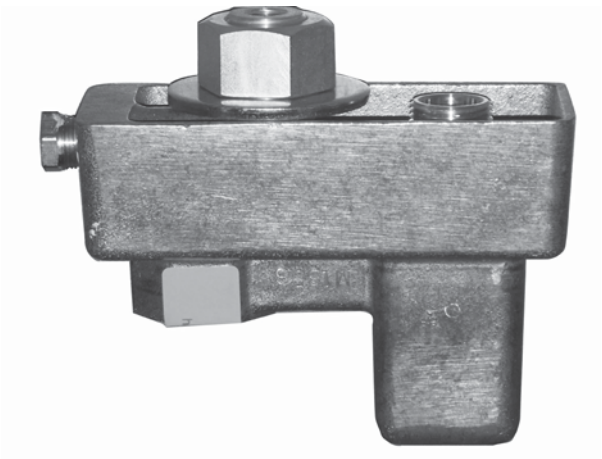

FIGURE 1-9
EBW Model 303-301-01

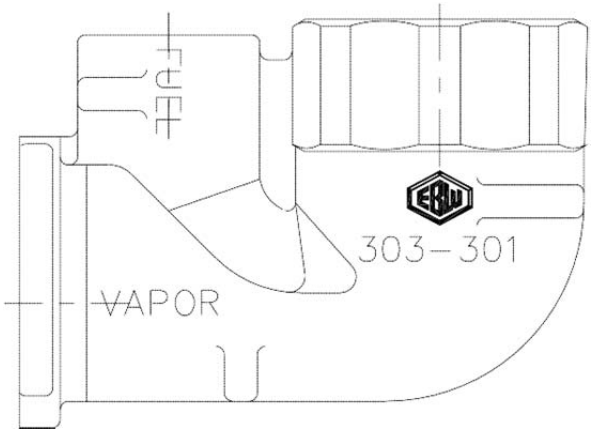

Healy Model 8701VV Breakaway

FIGURE 1-10a

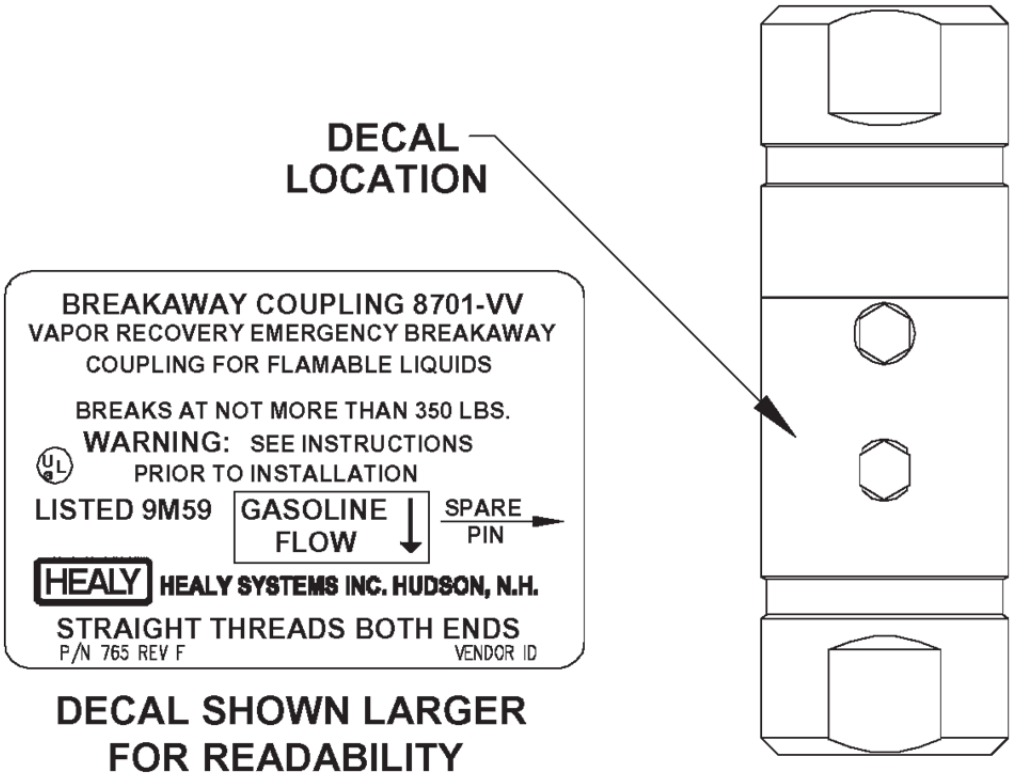

Healy Model 807 Swivel Breakaway

FIGURE 1-10b

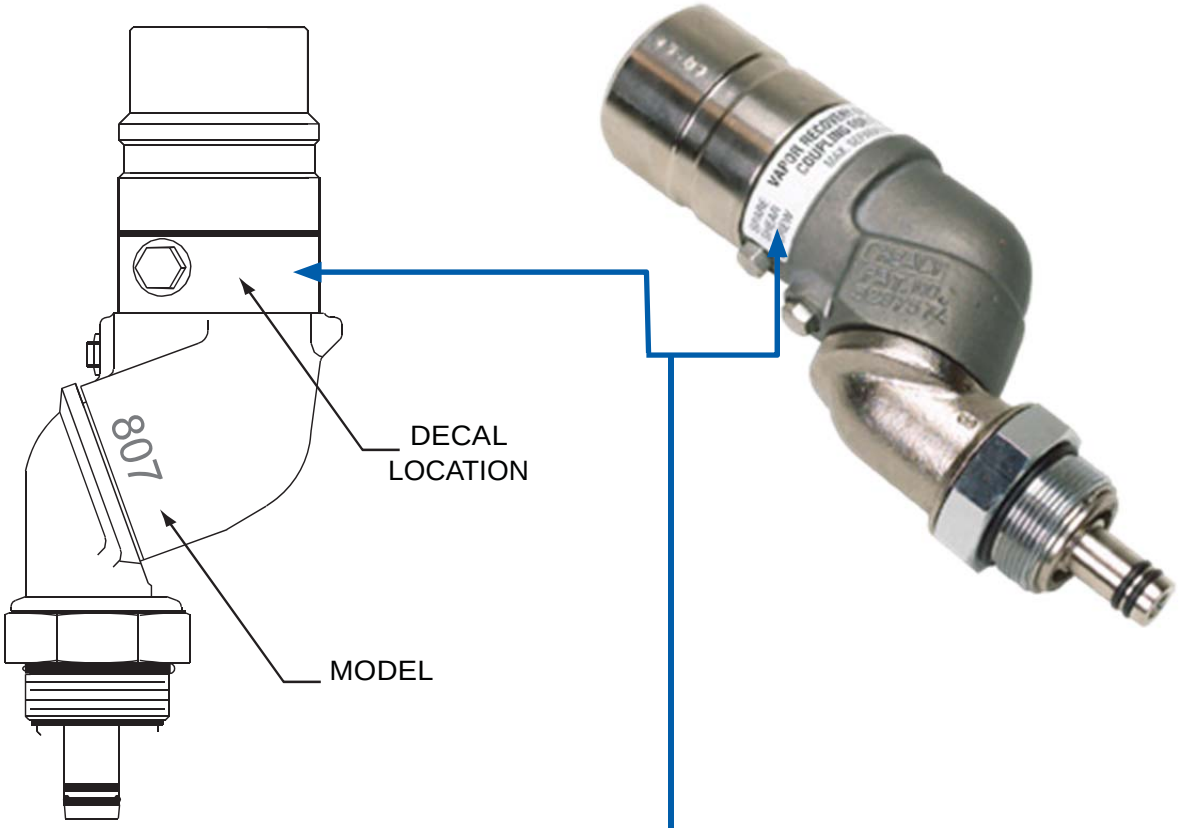

FLOW
STRAIGHT THDS.
BOTH ENDS
VAPOR RECOVERY EMERGENCY BREAKAWAY
COUPLING FOR FLAMMABLE LIQUIDS
MAX. SEPARATION FORCE 350#
FRANKLIN FUELING SYSTEMS MADISON WI
LISTED 9M59
MODEL
807
SPARE
SHEAR
SCREW
LBL P/N 893

FLOW
STRAIGHT THDS.
BOTH ENDS
VAPOR RECOVERY EMERGENCY BREAKAWAY
COUPLING FOR FLAMMABLE LIQUIDS
MAX. SEPARATION FORCE 350#
LISTED 9M59
MODEL
807
Healy Systems Inc. Hudson, N.H. 03051
SPARE
SHEAR
SCREW
LBL P/N 893

DECALS SHOWN LARGER FOR READABILITY

EITHER LABEL MAY APPLY

Catlow Model CTMCA Breakaway

FIGURE 1-10c

VST Model VST-HEVR-SBK Breakaway

FIGURE 1-10d

FIGURE 1-11
Healy Model 1301 Flow Limiter

FIGURE 1-12
Healy Model 1301 Flow Limiter

FIGURE 1-13
Healy Model 1302 Flow Limiter

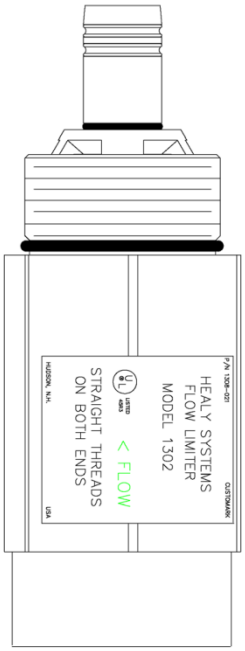

FIGURE 1-14
Healy Model 1302 Flow Limiter

FIGURE 1-15
Healy Model VP1000 Vacuum Pump

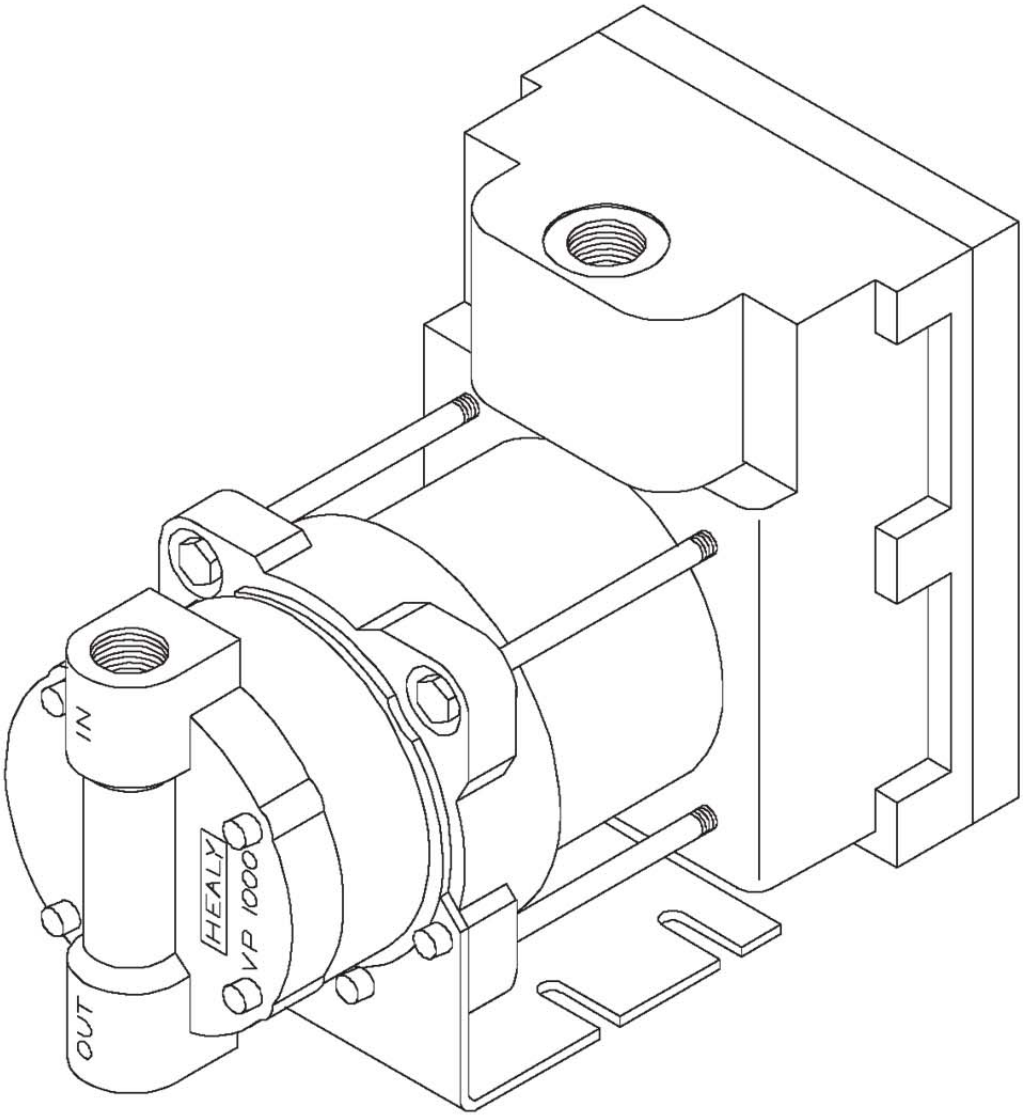

FIGURE 1-16
MC 100 Control Module

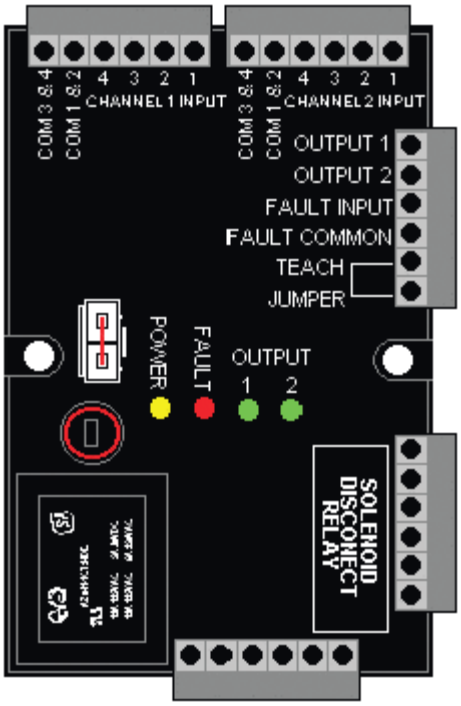

FIGURE 1-17
Maintenance Tracker Technician Key

FIGURE 1-18
Interface Module RS232/485
Dual Module with DB9 Converter or
Single Port Module with DB-25 converter

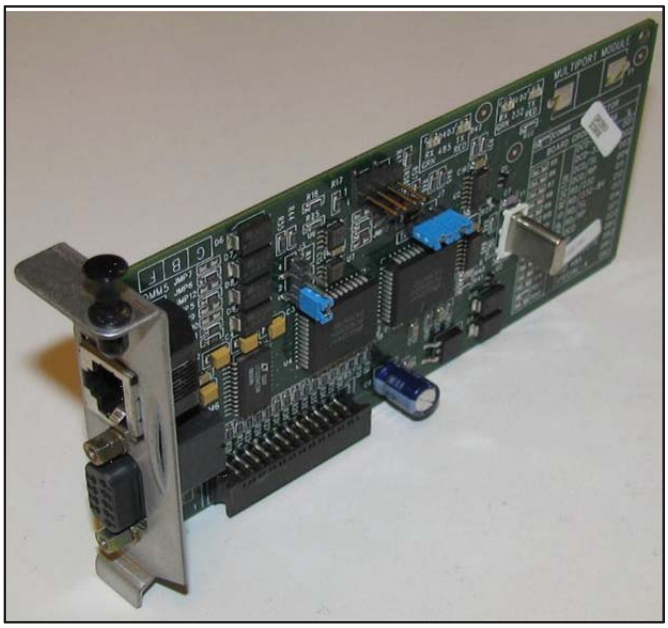

Part 2 - Vapor Equipment List for Liquid Condensate Trap
Figures 1A-LCT-1 and 1A-LCT-2

Component	Manufacturer/Model
Riser Adapter	INCON model TSP-K2A
In-Line Filter	140 micron, Swagelok B-4F2-140 or SS-4F2-140, or equivalent
Screen	Aluminum Insect screen (18X14 mesh), or Stainless Steel Insect screen (18X18 mesh).
Stainless Steel Hose Clamp	Sized to secure screen to suction tube.
Liquid Sensor [1]	Must have an audible and visual alarm
Liquid Condensate Trap[1]	Any capacity, manufacturer, make and model

[1] Must meet applicable State Water Resources Control Board requirements (*e.g.* LG-113, LG-167 and LG-169) and any local authority having jurisdiction which includes the Certified Unified Program Agency (CUPA).

FIGURE 1A-LCT-1
Typical Liquid Condensate Trap Installed Below the Transition Sump

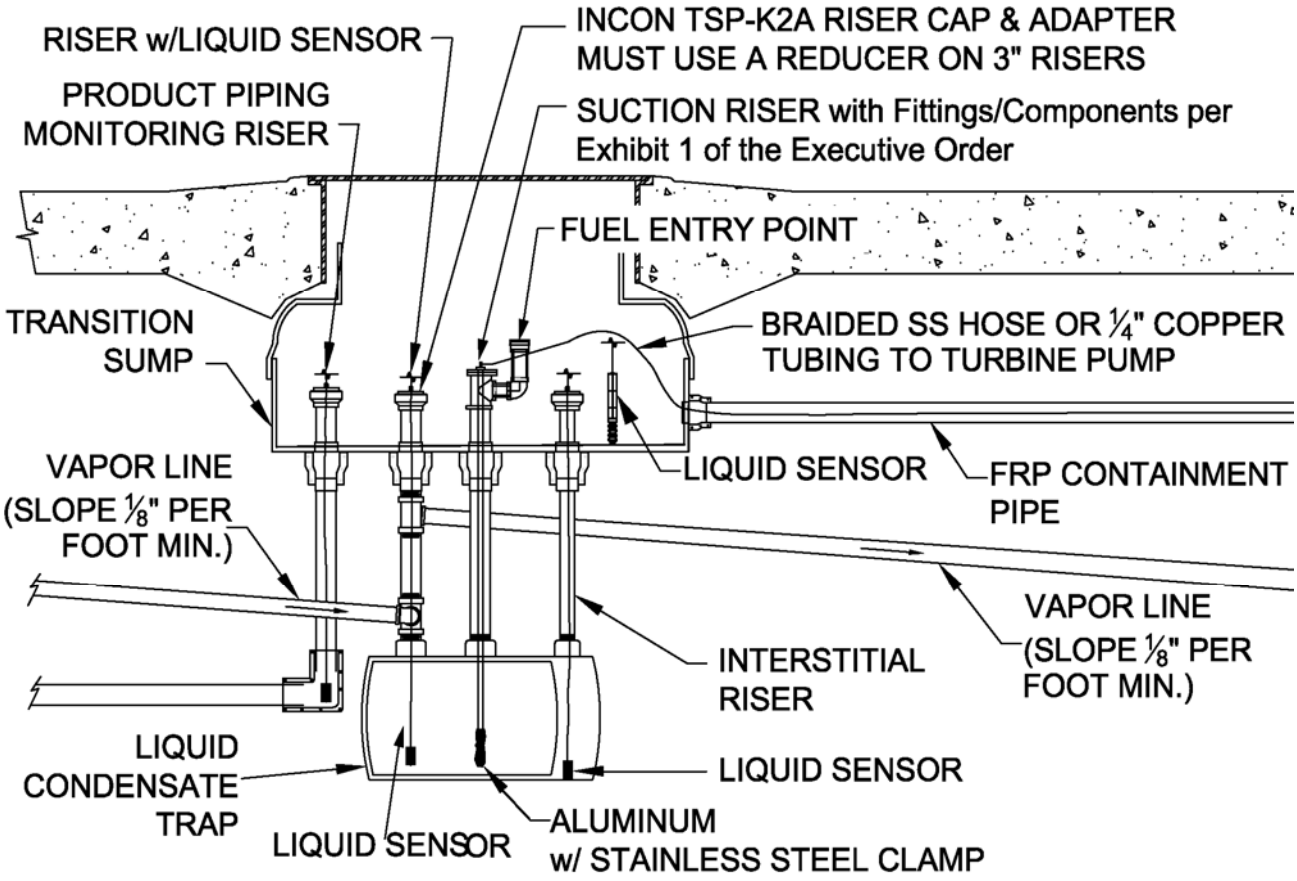

FIGURE 1A-LCT-2
Typical Liquid Condensate Trap Installed Inside the Transition Sump

Note: A Liquid Condensate Trap installed inside a liquid AND vapor tight transition sump that is monitored with a liquid sensor can be single walled (if installed before July 1, 2004).

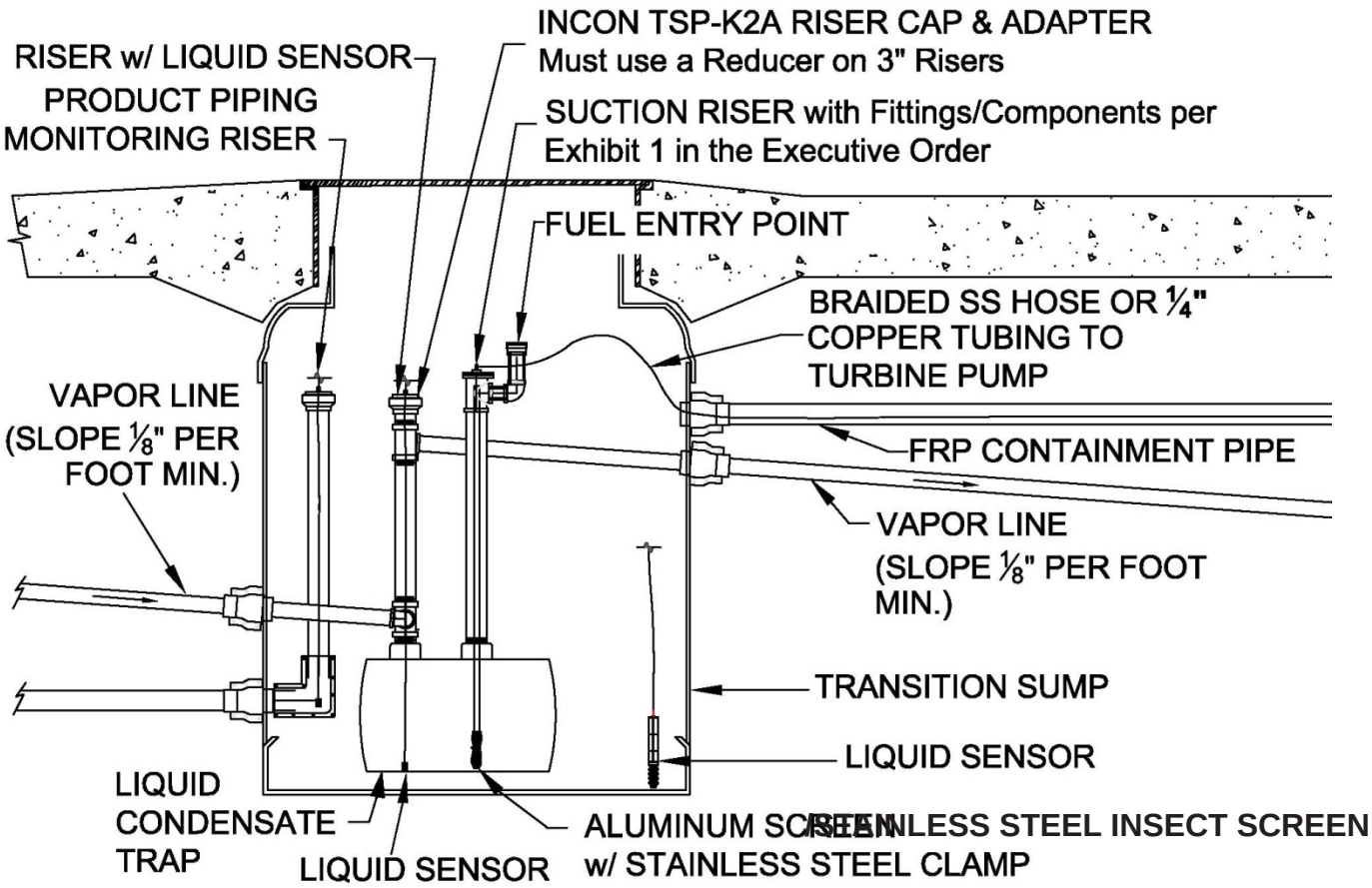

SECTION II - In-Station Diagnostics

Option 1 - Veeder-Root Equipment (VR)

Component	Manufacturer/Model
TLS Console	
	TLS-350 TLS-350 Plus TLS-350R Red Jacket ProMax Gilbarco EMC Simplicity
	Veeder-Root 8482XX-XXX Veeder-Root 8470XX-XXX X = Any digit (Figure 1-ISD-VR-1)
ISD Software Version	
	Veeder-Root ISD 1.05 (Required for new installations and facilities undergoing major modification)
	Refer to Table 1-ISD –VR-1, Veeder-Root ISD Software Version Compatibility Matrix
Vapor Flow Meter (1 per Dispenser)	
	Veeder-Root 331847-XXX X = Any digit (Figure 1-ISD-VR-2)
Vapor Pressure Sensor (1 per GDF)	
	Veeder-Root 331946-001 Wired, approved for installation in the dispenser or on the vent stack (Figure 1-ISD-VR-3a)
	OR
	Veeder-Root 861190-201 Low Powered Wireless, approved for installation on the vent stack **ONLY** (Figure 1-ISD-VR-3b)

Component	Manufacturer / Model
Vapor Pressure Sensor Desiccant Tube (optional) (1 per GDF)	Veeder-Root 330020 – Dryer Tube Figure (1-ISD-VR-3c)
Dispenser Interface Module (DIM)	Veeder-Root DIM Series (Figure 1-ISD-VR-4)
RS232 Interface Module	Veeder-Root RS232 Interface Module Series (Figure 1-ISD-VR-5)
RF Receiver-2 (optional)[1] (1 per GDF)	Veeder-Root 332440-029 (Figure 1-ISD-VR-6 and Figure 1-ISD-VR-7)
RF Repeater-2 (optional)[1] (1 per GDF)	Veeder-Root 332440-030 (Figure 1-ISD-VR-6 and Figure 1-ISD-VR-7)
RF Transmitter-2 (optional)[1] (1 per Dispenser)	Veeder-Root 332235-016 (Figure 1-ISD-VR-6 and Figure 1-ISD-VR-7)
RF Battery Pack (optional)[1] (1 per Transmitter)	Veeder-Root 332425-011 (Figure 1-ISD-VR-6 and Figure 1-ISD-VR-7)
TLS RF Console-2 (optional)[1] (1 per GDF)	Veeder-Root 332242-002 (Figure 1-ISD-VR-6 and Figure 1-ISD-VR-7)

[1] Optional wireless components for Veeder-Root Vapor Flow Meter

TABLE 1-ISD-VR-1
Veeder-Root ISD
Software Version Compatibility Matrix

Software Version*	Option		
	Dispenser Shutdown*** and Collection Monitroing Update	Wireless Components	Maintenance Tracker
1.01			●
1.02			●
1.03	●		●
1.04	●	●	●
1.05**	●	●	●

* Software Version 1.01 has been revoked for GDF's equipped with multiproduct (six pack) dispensers with fuel blending. Subject GDFs must upgrade to higher version software (1.02, 1.03, 1.04, or 1.05) by 07/01/2012.

** For new installations ISD software version 1.05 is compatible with all processors listed in this EO. For existing installations, refer to the above software compatibility matrix. With the exception of multiproduct (six pack) dispensers with fuel blending, software Versions 1.01, 1.02, 1.03, and 1.04 may remain in use at existing GDFs.
Software Version 1.05 must be installed at new GDFs or those undergoing a major modification as determined by date when the district issues the permit to construct.

*** Dispenser shutdown can be achieved by alternate means for GDFs equipped with Software Version 1.01 and 1.02 as indicated in the ARB approved IOM for the Veeder-Root ISD System.

FIGURE 1-ISD-VR-1
Veeder-Root 8482XX-XXX Veeder-Root 7470XX-XXX

Standard TLS Console

FIGURE 1-ISD-VR-2
Vapor Flow Meter
Veeder-Root 331847-XXX

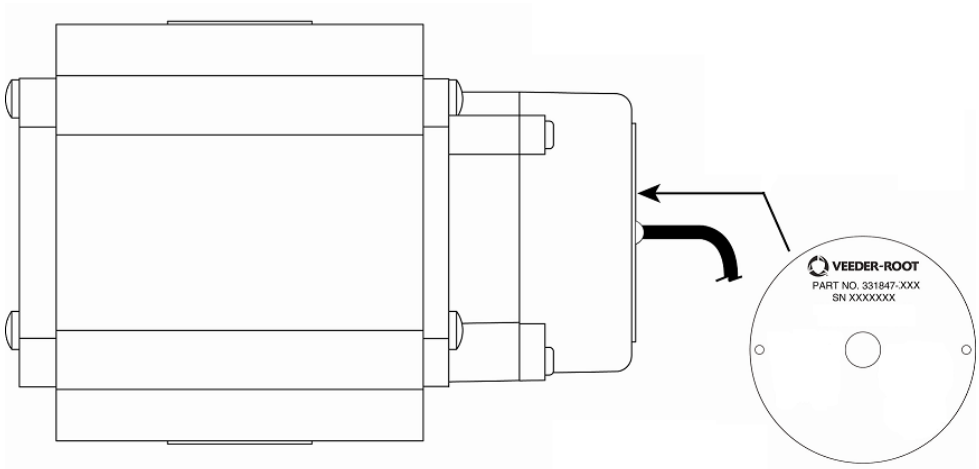

FIGURE 1-ISD-VR-3
Vapor Pressure Sensor

FIGURE 1-ISD-VR-3a
Veeder-Root 331946-001
Wired Vapor Pressure Sensor

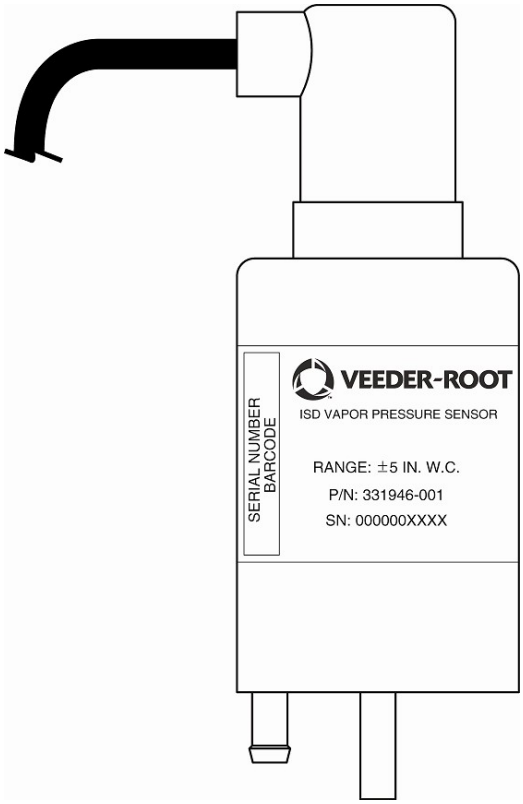

FIGURE 1-ISD-VR-3b
Veeder-Root 861190-201
Low Powered Wireless Vapor Pressure Sensor

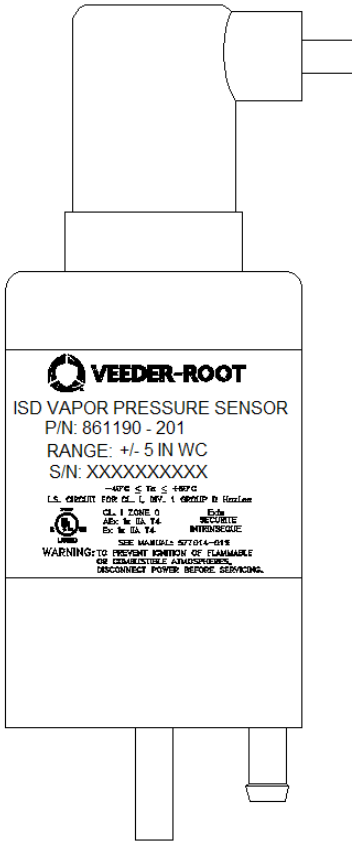

FIGURE 1-ISD-VR-3c
Veeder-Root 330020-717
Dryer Tube (Optional)

FIGURE 1-ISD-VR-4
Dispenser Interface Module (DIM)

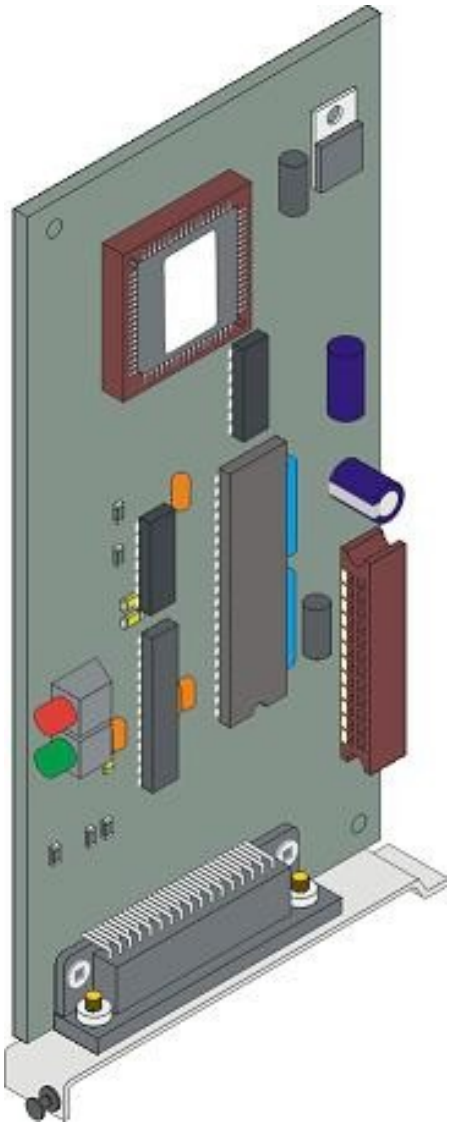

FIGURE 1-ISD-VR-5
RS232 Interface Modules

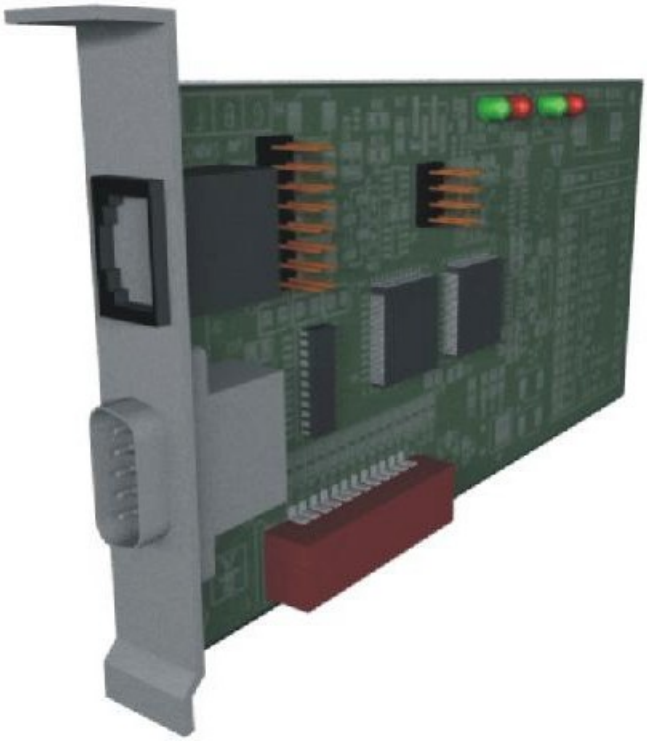

FIGURE 1-ISD-VR-6
Veeder Root Optional Wireless Components

RF Receiver-2

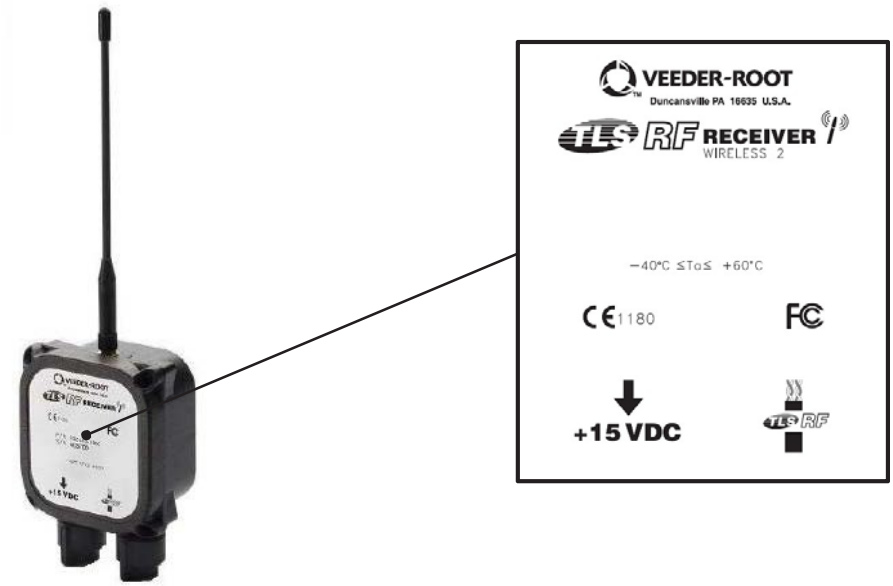

RF Repeater-2

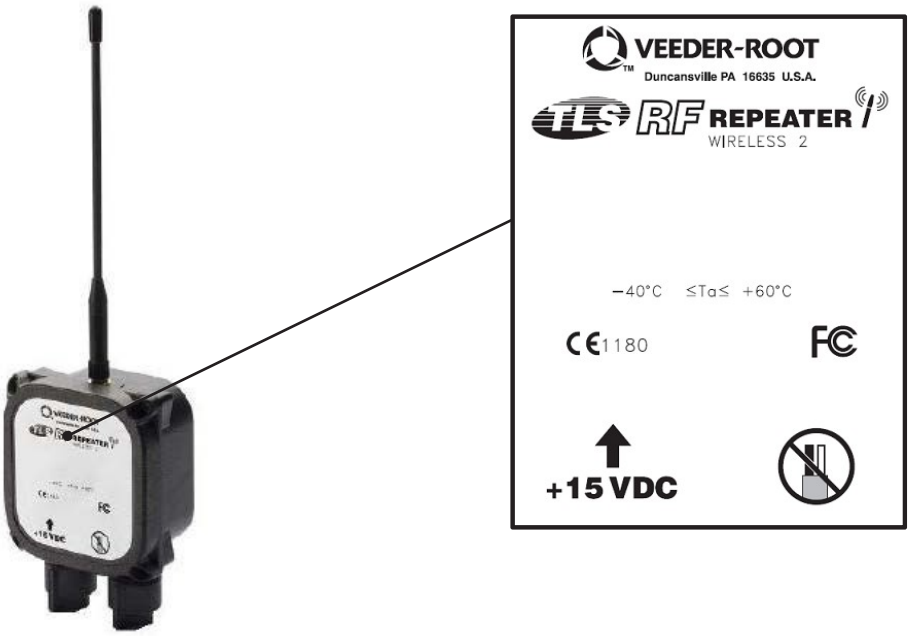

FIGURE 1-ISD-VR-6 (continue)
Veeder Root Optional Wireless Components

RF Transmitter-2

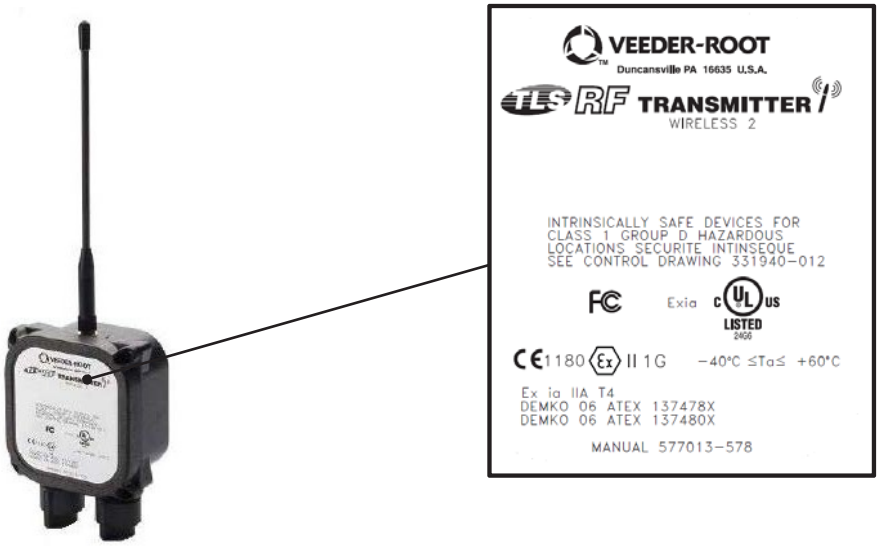

RF Battery Pack

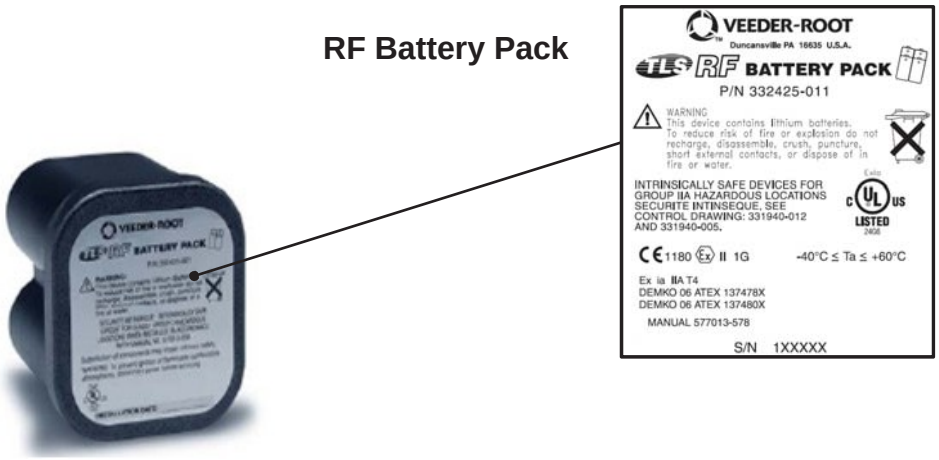

TLS RF Console-2

FIGURE 1-ISD-VR-7
TLS RF Wireless System Layout

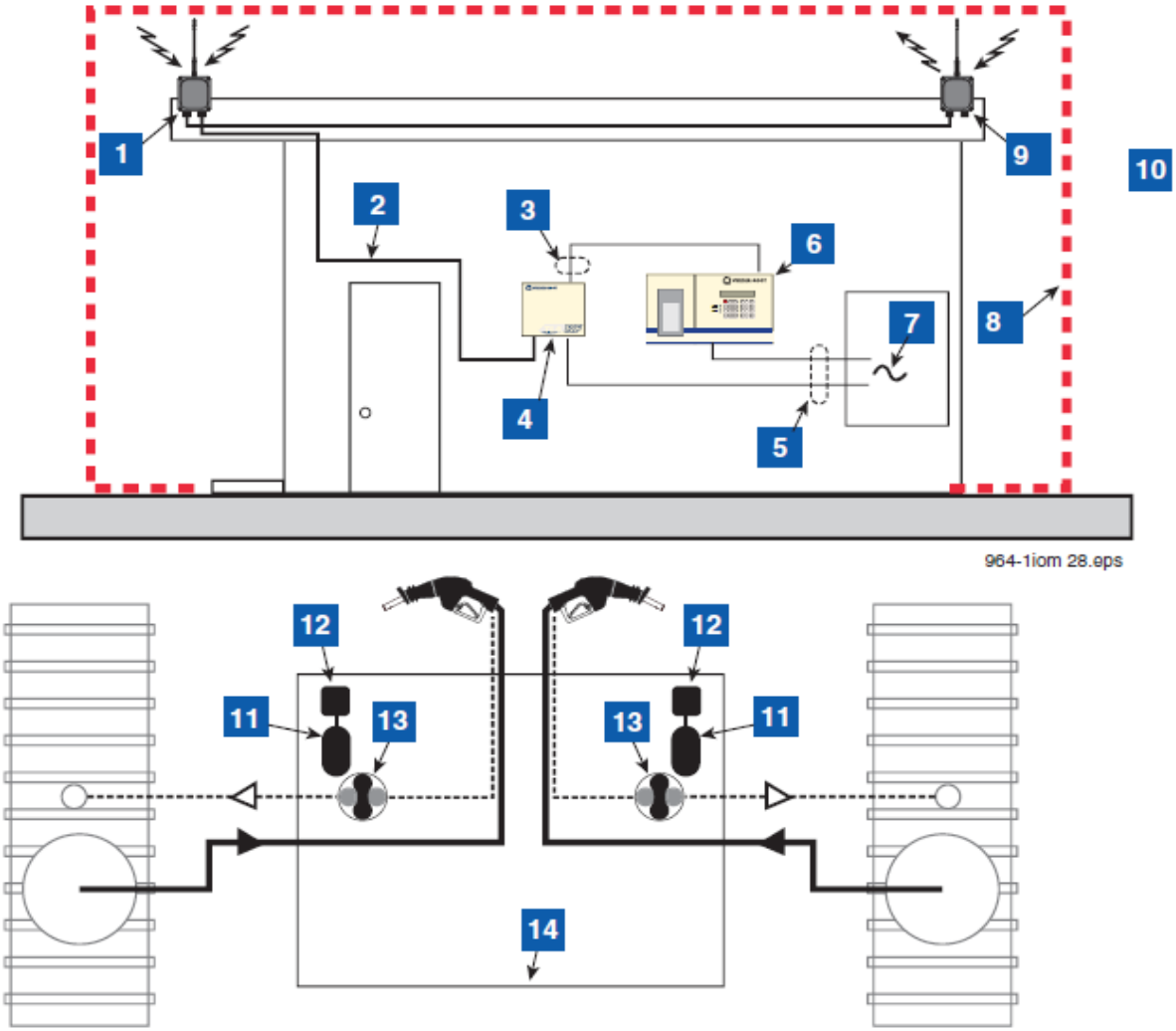

LEGEND FOR NUMBERED BOXES IN Figure 1

To be installed in accordance with the National Electrical Code, NFPA 70 and the Code for Motor Fuel Dispensing Facilities and Repair Garages (NFPA 30A), or other local codes such as the CEC, Canadian Electrical Code.

WARNING! Substitution of components may impair intrinsic safety.

Circuitry within the console barrier forms an intrinsically safe, energy-limited system. This system is intrinsically safe for use in a Class I, Group D hazardous location.

1. Receiver (1 per RF System)
2. RS-485 Cable (Belden #3107A or equiv.)
3. NOTE: Intrinsically safe wiring shall be installed in accordance with Article 504-20 of the NEC, ANSI/ NFPA 70. Max cable length 1000 ft. (304 m).W2 Receiver (1 per RF System)
4. TLS-RF
5. Conduit that enters power wiring knockout.
6. TLS console (Vm = 250 V)
7. 120 or 230 Vac from power panel
8. Non-hazardous area
9. Repeater (1 per RF System)
10. Hazardous area (Class I, Div. 1, Group D)
11. Transmitter
12. Battery pack
13. Vapor Flow meter
14. Dispenser sump

Section II - In-Station Diagnostics

Option 2- INCON Equipment List

Component	Manufacturer/Model
Console	
TS-EMS	INCON / TEMSXXXX/YV Where: X represents hardware option (Example: X can be: 'D' for Display, 'P' for Printer) Y represents software option (Example: Y can be: 'S' for Secondary Containment Monitoring) V represents Vapor Recovery Monitoring Application
TS-550	INCON / T550XXXX/YYYYV
TS-5000	INCON / T5000XXXX/YYYYV Where: X represents hardware option (Example: X can be: 'D' for Display.'P' for Printer) Y represents software option (Example: Y can be: 'T' for Tank Testing) V represents Vapor Recovery Monitoring Application
	(Figure 1-ISD-INCON-1)

Note: All consoles come standard with RS-232 (COMM 1) and Ethernet ports for data access.

Vapor Recovery Monitoring (VRM) Software
INCON / TS-VRM Version 1.2.0

Vapor Flow Meter
(1 per Dispenser) INCON TS-VFM
(Figure 1-ISD-INCON-2)

Vapor Pressure Sensor
(1 per GDF) INCON TS-VPS
(Figure 1-ISD-INCON-3)

Component	Manufacturer / Model
Data Transfer Unit (Optional)[3]	
(1 per dispenser and 1 per GDF)	INCON TS-DTU/P (Figure 1-ISD-INCON-4)
Dispenser Retrofit Kit (Optional)[2]	
(1 per dispenser with DTU)	INCON TS-DRK/x

where x represents Type of Installation Kit

W, Wayne Installation Kit

E, Gilbarco Encore Installation Kit

A, Gilbarco Advantage Installation Kit

T, Tokheim Installation Kit

Thermal Printer Retrofit for TS-EMS and TS-550 with VRM Consoles (Optional)

A. Order Model Number TSSP-TMPTR;

B. ISD Software must be version 1.2.0 or higher; and

C. The Console Firmware must be 1.5.x.xxxx or higher.

[3] Optional installation method for the replacement of dedicated wires to VFM and VPS. Refer to the IOM for more information

FIGURE 1-ISD-INCON-1
INCON TEMSXXXX/YV
INCON T550XXXX/YYYYV
INCON T5000XXXX/YYYYV

FIGURE 1-ISD-INCON-2
INCON TS-VFM
Vapor Flow Meter

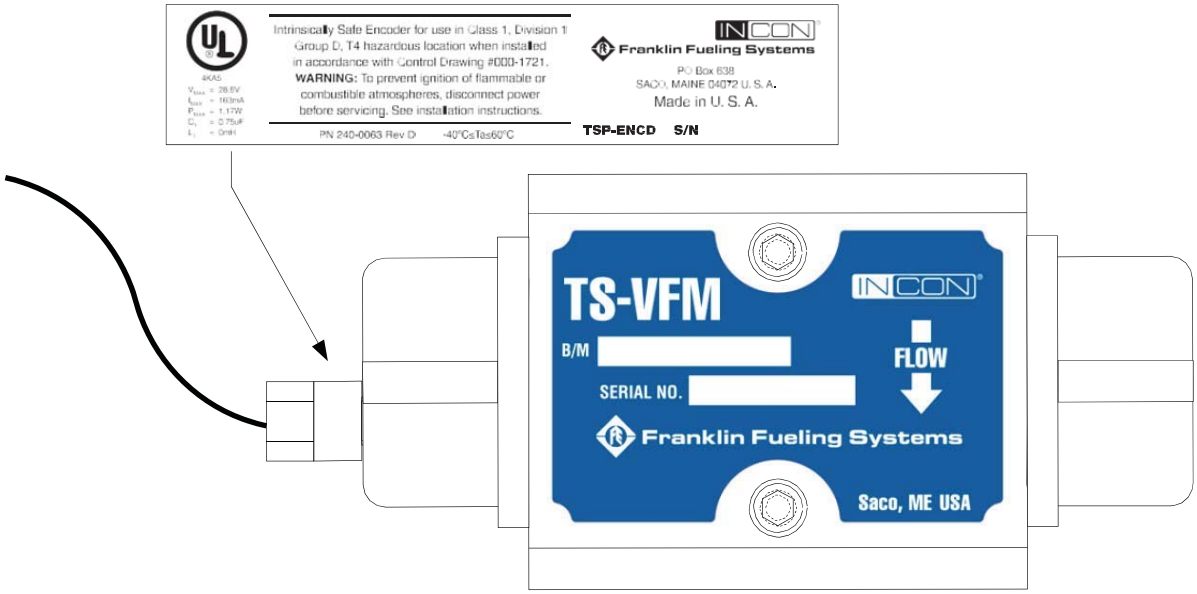

FIGURE 1-ISD-INCON-3
INCON TS-VPS
Vapor Pressure Sensor

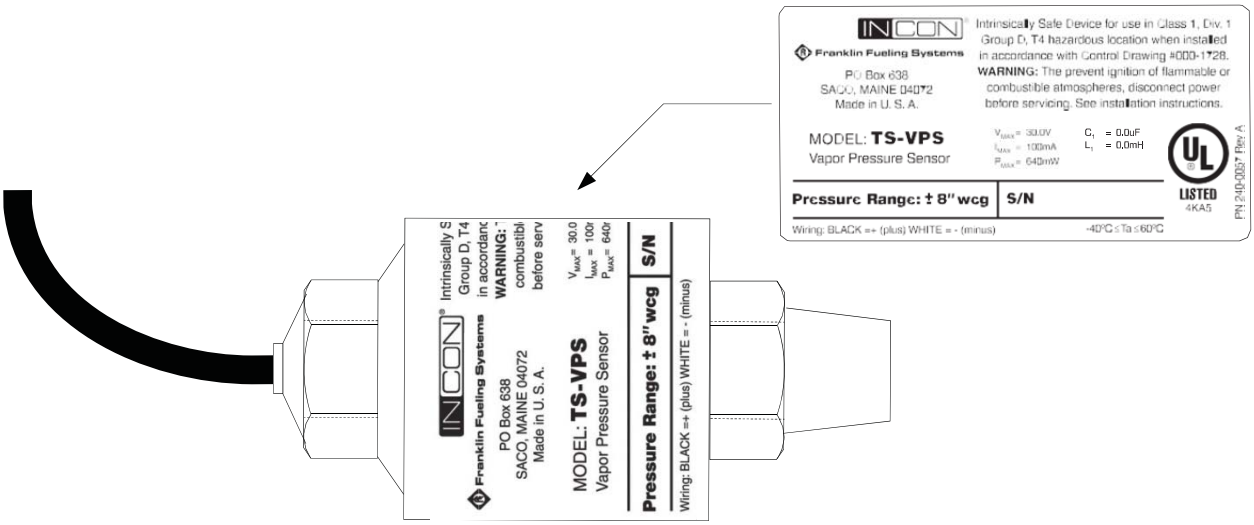

FIGURE 1-ISD-INCON-4
INCON TS-DTU/P
Data Transfer Unit

Label with DTU Serial Number and ID Number

Exhibit 2
SYSTEM SPECIFICATIONS

SECTION I - EVR System Specifications

This exhibit contains the installation, maintenance and compliance standards and specifications that apply to the Assist Phase II EVR System Including In-Station Diagnostics (ISD) Systems installed in a gasoline dispensing facility. All components must be installed, operated, and maintained in accordance with the specifications in the **ARB Approved Installation, Operation and Maintenance (IOM) Manual**. Installation, maintenance, and repair of system components, including removal and installation of such components in the course of any required tests, shall be performed by technicians certified by the appropriate manufacturer unless otherwise specified in the IOM. Additional certifications may be required in accordance with local district requirements.

Nozzle

1. A vapor collection boot shall be installed on the nozzle at the base of the spout, as shown in **Figure 2-1**.

2. The Healy Model 900 nozzle has an integral vapor valve which prevents the loss of vapor from the underground storage tanks, ensures proper operation of the system and prevents the ingestion of air into the system. Any dispenser that has a nozzle installed that is determined to have a defective vapor valve, as described in items 2.1 or 2.2 below, shall be immediately removed from service (including nozzle(s) on both sides of dispenser) and a call for repair made immediately.

   2.1. The maximum allowable leak rate for the nozzle vapor path, as determined by TP-201.2B, shall not exceed the following:

   0.038 cubic feet per hour (CFH) at a pressure of two inches water column (2.00” wc), and
   0.10 CFH at a vacuum of one hundred inches water column (-100.00” wc)

   2.2. Verification of the integrity of the vapor valve can be performed on installed nozzles using the nozzle bag test procedure in Exhibit 7.

3. Any nozzle that dispenses fuel with the miniboot in a free state condition, as determined by the quarterly inspection procedure, shall be removed from service until repaired or replaced.

Vapor Collection

1. The V/L ratio of the system shall be **1.05 plus or minus 0.10 (0.95 to 1.15)**, measured at a flow rate between six and ten gallons per minute (6.0 – 10.0 gpm). *Any fueling point whose V/L ratio is determined to be at or below 0.80 shall be deemed defective and removed from service.* The V/L ratio shall be determined by using the test procedure in Exhibit 5 with the shut-off port excluded, or with an ARB approved alternate test procedure. See Section 7 of Exhibit 5 for guidance on V/L adjustment.

2. Inoperative vapor pumps, as determined by the ***ARB Approved Installation, Operation and Maintenance Manual***, constitute a defect.

3. For unihose dispensers, any modifications or repairs to the nozzle, hanging hardware or vacuum pump done to bring one fuel grade V/L into compliance at a fueling point invalidates the results of any previous fuel grade(s) tested before the alteration. All fuel grades at that fueling point shall be tested again to verify compliance.

Inverted Coaxial Hoses

1. The maximum length of the hose assembly, including hose adaptor, whip hose, breakaway, flow limiter (optional) and inverted coaxial hose, measured from the base of the nozzle to the end of dispenser adapter or dispenser, as appropriate, shall be no more than eighteen (18) feet.

2. Any hose configuration is allowed.

Breakaway Couplings

Testing is required after reconnecting the breakaway to ensure proper operation and no observed leaks. The procedure for reconnecting breakaway and fueling point testing after a drive-off, referenced in Section 1.4 of Scheduled Maintenance, shall be conducted to verify that breakaway, hose and nozzle are operating properly after a drive-off.

Flow Limiters

Flow limiter is mandatory when the flow rate is greater than 10.0 gallons per minute to comply with U.S. EPA requirement.

Clean Air Separator Pressure Management System

1. The Clean Air Separator is a passive gasoline storage tank ullage pressure management system, with no electrical requirements. The Clean Air Separator vapor integrity shall be evaluated using the test procedure outlined in Exhibit 4 of this Executive Order.

   a. The system shall be removed from service when the Clean Air Separator fails the leak decay test outlined in Exhibit 4.

   b. Unless there is maintenance or testing being conducted on the Clean Air Separator, the system shall be removed from service when the four ball valves are not locked in the positions shown in **Figure 2-2** or **2-2H** for normal Clean Air Separator operation. Figure 2-2 applies to vertical Clean Air Separator installations and Figure 2-2H applies to horizontal Clean Air Separator installations.

2. The Clean Air Separator shall be installed within 100 feet from the vent line(s), and the associated piping shall be sloped 1/8” per foot minimum toward the vent line(s).

Pressure/Vacuum Vent Valves for Gasoline Storage Tank Vents

1. All P/V vent valves shall be an ARB-certified P/V vent valve for a Phase I system.

2. At least one pressure/vacuum (P/V) vent valve shall be installed on each gasoline storage tank vent. The maximum number of P/V vent valves allowed and P/V vent valve performance specifications are listed in the applicable Phase I EVR Executive Order. Vent lines may be manifold to minimize the number of P/V vent valves and potential leak sources, provided the manifold conforms to all applicable fire regulations. At least one P/V vent valve shall be installed on vents if a manifold is incorporated. **Figure 2-3** or **2-3H** shows a typical manifold configuration for a single P/V vent valve with the Clean Air Separator. If two or more P/V vent valves are desired, they shall be installed in parallel, so that each can serve as a backup to the other if one should fail to open properly. **Figure 2-4** or **2-4H** shows a typical manifold configuration for two P/V vent valves installed in parallel with the Clean Air Separator. **Figure 2-5** or **2-5H** shows a typical manifold configuration for three P/V vent valves installed in parallel with the Clean Air Separator. **Figure 2-6** or **2-6H** shows a typical configuration for a P/V vent valve mounted on a single 3” vent line with the Clean Air Separator. Figures 2-3, 2-4, 2-5 and 2-6 apply to vertical Clean Air Separator installations. Figures 2-3H, 2-4H, 2-5H and 2-6H apply to horizontal Clean Air Separator installations.

Warranty

Each manufacturer listed in Exhibit 1 shall include a warranty tag with the certified component(s). The manufacturer warranty tag, included with each component, shall be provided to the service station owner/operator at the time of installation.

Vapor Recovery Piping Configurations

NOTE: Vapor return piping shall meet the piping requirements specified in section 4.11 of CP-201.

1. Vapor Return and Vent Lines

   a. For facilities installed on or after April 1, 2003, all vapor return and vent lines shall be a minimum nominal internal diameter of 2 inches from the dispensers or the vent stacks to the first manifold. All lines after the first manifold and back to the underground storage tank shall have a minimum nominal internal diameter of 3 inches.

      Note: Facilities permitted by a local district prior to April 1, 2003 shall be required to meet the three inch diameter standard only upon facility modification which involves the addition, replacement, or removal of 50 percent or more of the buried vapor piping.

      After backfilling the vapor return and vent lines, the maximum pressure drop shall not exceed 0.5 inches WC at 60 cubic feet per hour as determined by TP-201.4, Dynamic Backpressure. The pressure drop shall be measured from the dispenser riser to the UST with pressure/vacuum vent valves installed and with the poppeted Phase I vapor connection open.

   b. For existing installations, the maximum pressure drop through the system shall not exceed 0.5 inches WC at 60 cubic feet per hour as determined by TP-201.4, Dynamic Backpressure. The pressure drop shall be measured from the dispenser riser to the UST with the pressure/vacuum vent valves installed and with the poppeted Phase I vapor connection open.

   Note: The V/L test from Exhibit 5 may be used to verify proper operation of the system, in lieu of measuring the pressure drop through the lines, provided that at least two gallons of product are introduced into the system through each dispenser riser, prior to the test.

2. All vapor return lines shall have a minimum slope of 1/8 inch per foot from the dispenser riser to the riser of the underground storage tank (UST). A slope of 1/4 inch or more per foot is recommended wherever feasible. The vapor return path from any dispenser riser to the UST shall be free of liquid or fixed blockage.

   Exception: When it is not possible to achieve the necessary minimum slope from the dispenser back to the underground storage tanks, a low point Liquid Condensate Trap (i.e. knock out pot, thief port) can be utilized as long as the conditions under **Liquid Condensate Traps** in this Exhibit 2 are met.

3. The dispenser shall be connected to the riser with either flexible or rigid material that is listed for use with gasoline. The dispenser-to-riser connection shall be installed so that any liquid in the lines will drain toward the gasoline storage tank. The internal diameter of the connector, including all fittings, shall not be less than one-half inch (1/2”).

   Note: The dispenser-to-riser connection is defined as the piping connection between the outlet of the vapor flow meter and the inlet of the dispenser riser. A vapor shear valve may also be part of the riser connection.

4. There is no length restriction for the vapor return piping of the system as long as the system complies with the maximum pressure drop requirement of Item 1 (or the V/L option).

5. No product shall be dispensed from any fueling point at a GDF installed with the Assist Phase II EVR System Including In-Station Diagnostics (ISD) Systems if there is a vapor line that is disconnected and open to the atmosphere.

Dispenser Vapor Piping

1. Any dispenser with a dispenser piping test valve in the closed position shall be considered a defect.

2. The ball valve shall be installed between the test port and the vacuum pump. The ball valve and test port shall be located on the inlet side of the vacuum pump.

3. If the vapor flow meter is installed below the vapor shear valve, then a “Y” fitting for introducing liquid shall be installed below the vapor flow meter.

4. The vapor flow meter shall be installed on the down stream side of the vacuum pump.

5. The Vapor Pressure Sensor shall be installed into one of the dispensers at the GDF located closest to the underground storage tanks (If a row of dispensers are equal distance from the gasoline tank pad and within 10’ of each other, any dispenser can be used).

Liquid Condensate Traps

1. There shall be no vapor leaks when tested in accordance with the latest version of TP 201.3, **Determination of 2 Inch WC Static Pressure Performance of Vapor Recovery Systems of Dispensing Facilities**.

2. The Liquid Level Sensor shall alarm within five (5) minutes when tested in accordance with Exhibit 11, **Liquid Condensate Trap Compliance Test**.

3. The Liquid Level Sensor audible alarm shall be installed at a location that is most likely to be heard by the station attendant during normal station operation (e.g.

cash register).

4. The Liquid Evacuation System shall automatically evacuate gasoline when tested in accordance with Exhibit 11, **Liquid Condensate Trap Compliance Test.**

5. A metal tag specifying the capacity of the Liquid Condensate Trap shall be installed and maintained as specified in the Installation, Operation, and Maintenance Manual.

Maintenance Tracker Kit for Veeder Root TLS Console (Optional)

- The Maintenance Tracker kit consists of the following devices:
- Maintenance Tracker Technician Key
  (Figure 2-7)
- Interface Module RS232/485 Dual Module with DB9 Converter or Single Port Module with DB-25 converter
  (Figure 2-8)
- Manual

In-Station Diagnostics

Veeder-Root In-Station Diagnostics

1. The gasoline dispensing facility operator/owner and contractor shall comply with local district requirements, if any, following a warning by the Veeder-Root In-Station Diagnostics (ISD) system.

2. Suggested Troubleshooting, found in Table 5-1 of the Veeder-Root In-Station Diagnostics ISD) Install, Setup, and Operation Manual (ARB Approved Installation, Operation, and Maintenance Manual), recommends that certain tests be conducted to verify the cause of the ISD warning or failure alarms. Districts may require that these tests or other tests specified by the districts be conducted in response to the ISD alarms.

INCON Vapor Recovery Monitoring

1. The gasoline dispensing facility operator/owner shall comply with local district requirements, if any, following a warning by the INCON Vapor Recovery Monitoring system and a shut down of individual dispensers for all gasoline products by the vapor recovery.

2. Suggested Troubleshooting, found in Appendix A of the INCON Vapor Recovery Monitoring Install, Setup, and Operation Manual (ARB Approved Installation, Operation, and Maintenance Manual), recommends that certain tests be conducted to verify the cause of the warning or failure alarms. Districts may require that these tests or other tests specified by the districts be conducted in response to the monitoring system alarms.

Phase I System

The Phase I system shall be an ARB-certified system that demonstrates compliance with the static pressure decay test criteria contained in the latest version of TP-201.3.

Maintenance and Alarm History Records

1. Each GDF operator/owner shall keep records of maintenance performed at the facility. Such records shall be maintained on site or in accordance with district requirements or policies. The records shall include the maintenance or test date, repair date to correct test failure, maintenance or test performed, affiliation, telephone number, name and Certified Technician Identification Number of individual conducting maintenance or test. Additional information may be required in accordance with local district requirements.

   Each GDF operator/owner shall keep records of all alarms detected by the ISD system. Alarm History records shall be maintained on site or in accordance with district requirements or policies. The records shall include the alarm date, the nature of the alarm, type of test and test date to verify the validity of ISD alarm, maintenance or repair date to correct the cause of the alarm, maintenance or repair performed to correct the cause of the alarm, affiliation, telephone number, name and Certified Technician Identification Number of individual conducting maintenance or test. Additional information may be required in accordance with local district requirements**.**

   An example of a GDF Maintenance and Alarm History Record is shown in **Figure 2-9**.

2. Maintenance shall be conducted in accordance with Scheduled Maintenance document in ***ARB Approval Installation, Operation and Maintenance Manual***.

3. Reconnection of breakaways shall be included in the maintenance records.

FIGURE 2-1
Vapor Boot for Healy 900 Nozzle

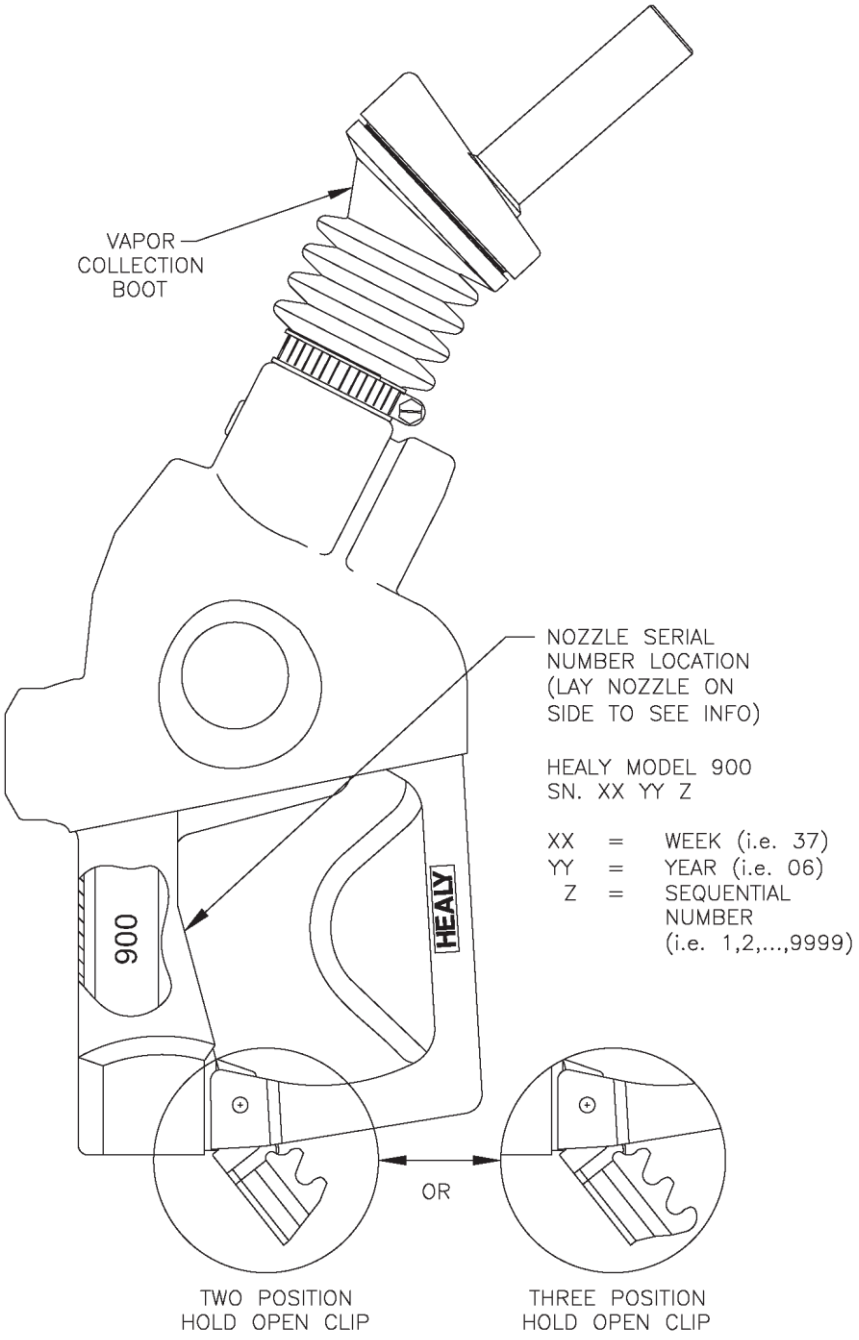

FIGURE 2-2
Clean Air Separator Normal Operation Configuration

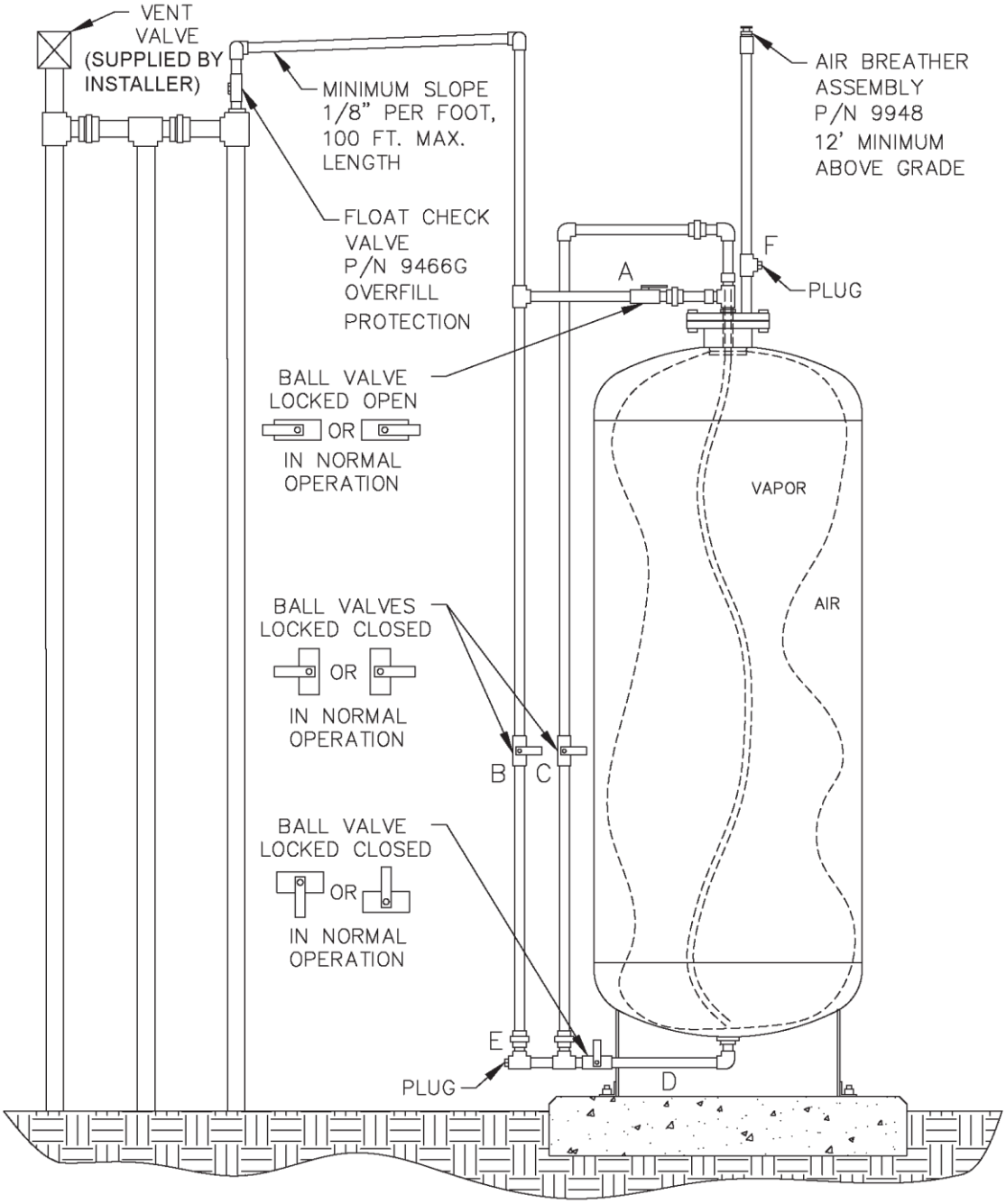

FIGURE 2-2H
Clean Air Separator Normal Operation Configuration

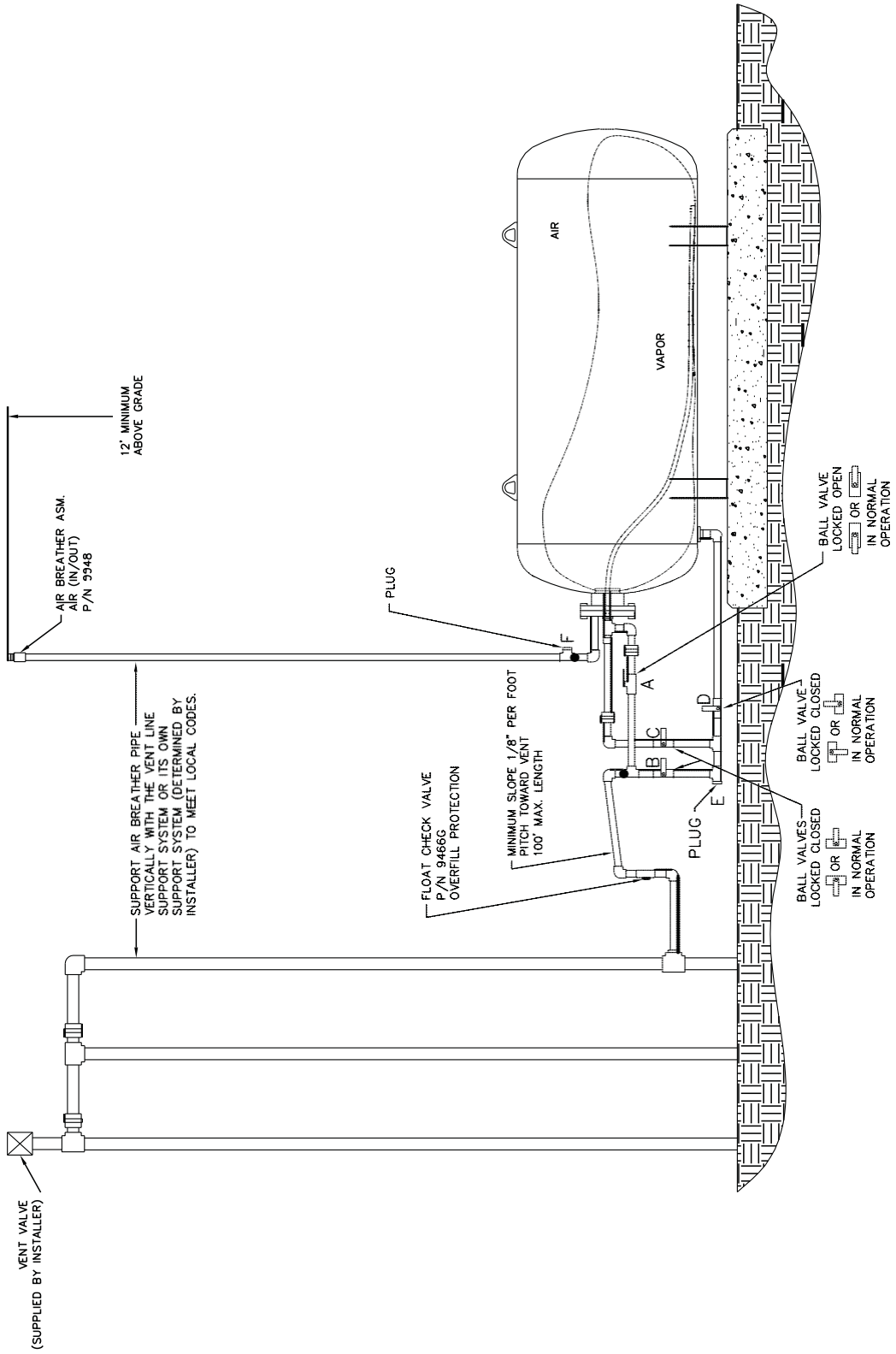

FIGURE 2-3
Typical Installation of a Single P/V Vent Valve Manifold with Healy Clean Air Separator

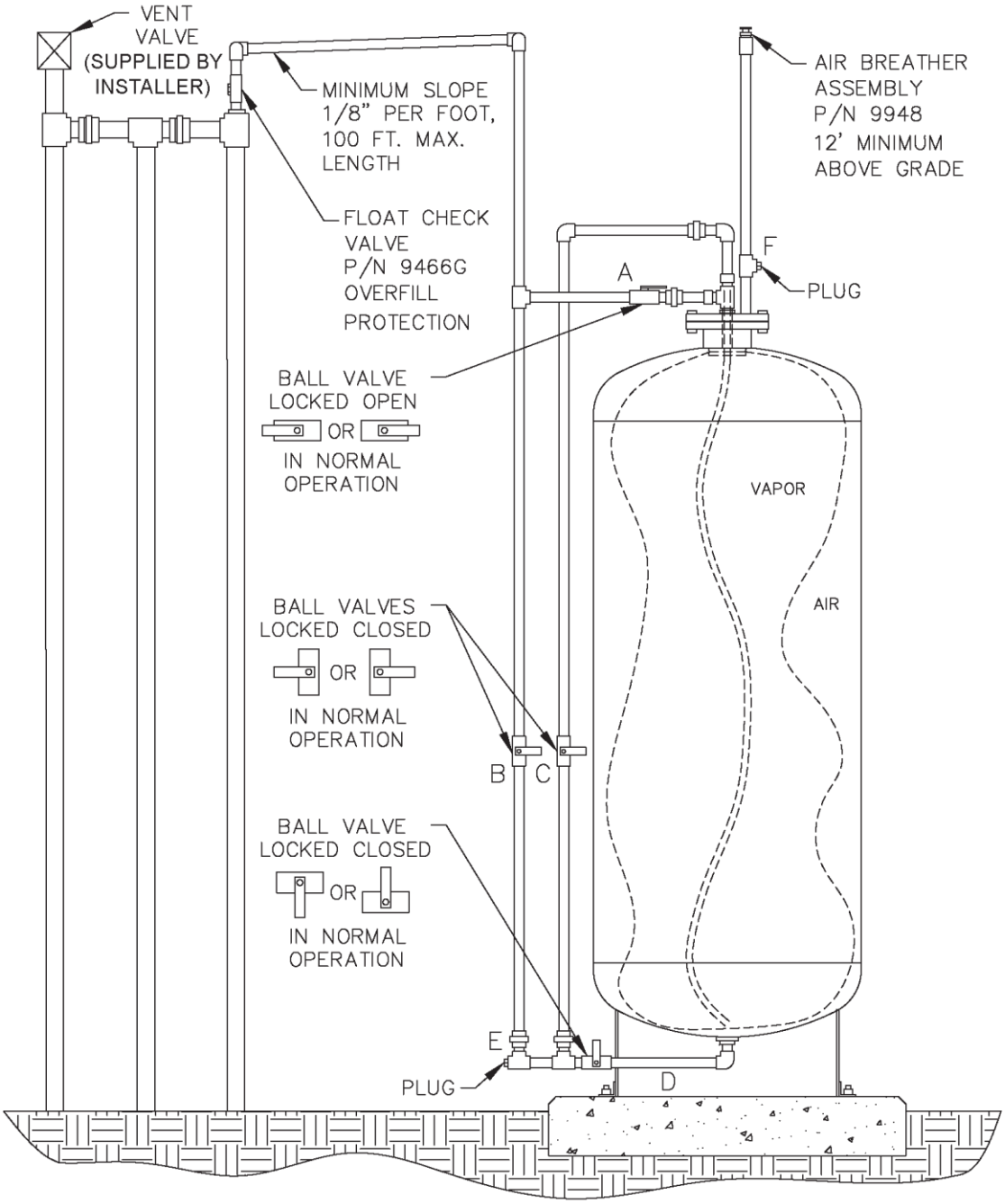

FIGURE 2-3H
Typical Installation of a Single P/V Vent Valve Manifold with Healy Clean Air Separator

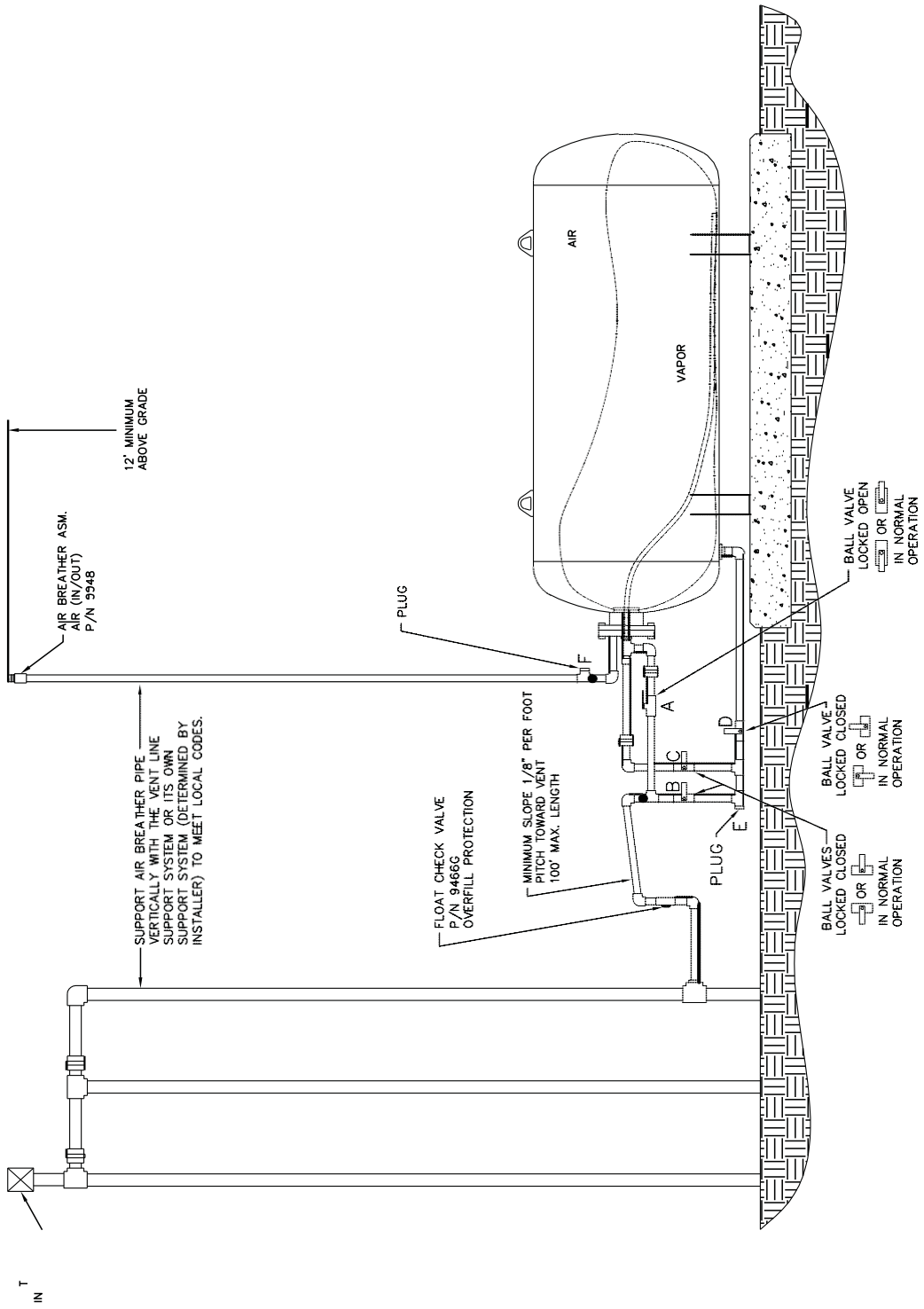

FIGURE 2-4
Typical Installation of a Two P/V Vent Valve Parallel Manifold with Healy Clean Air Separator

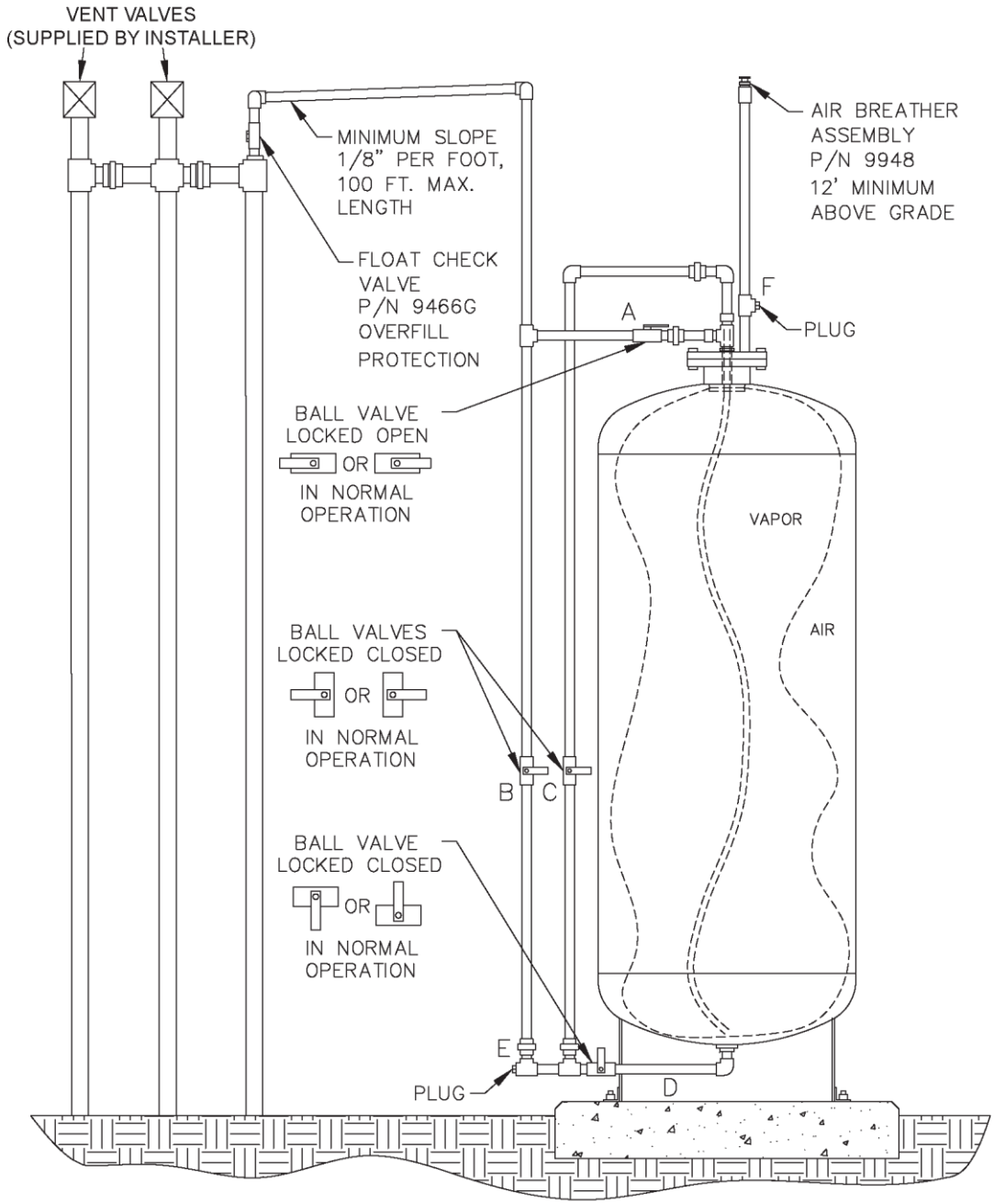

FIGURE 2-4H
Typical Installation of a Two P/V Vent Valve Parallel Manifold with Healy Clean Air Separator

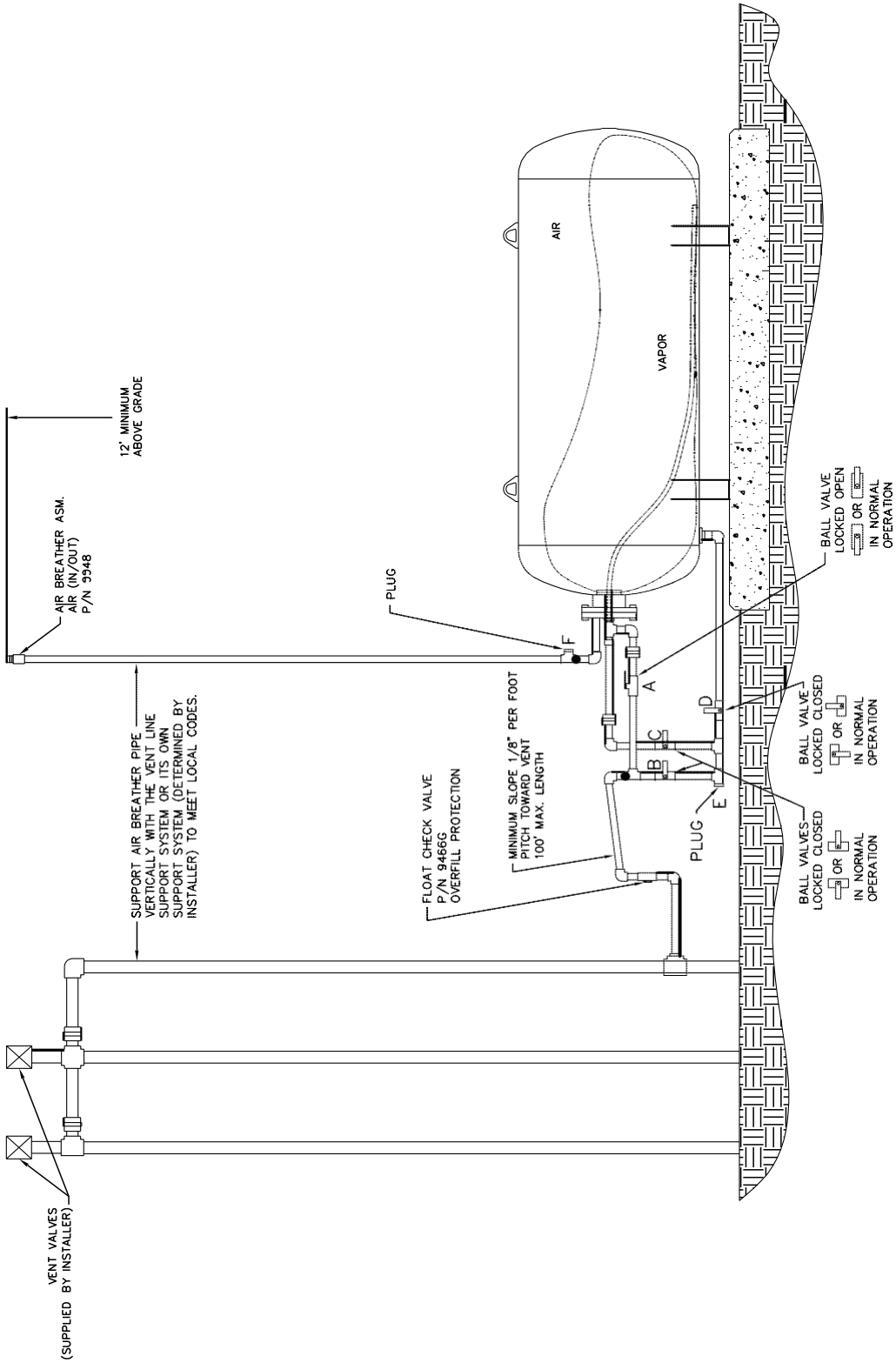

FIGURE 2-5
Typical Installation of a Three P/V Vent Valve Parallel Manifold with Healy Clean Air Separator

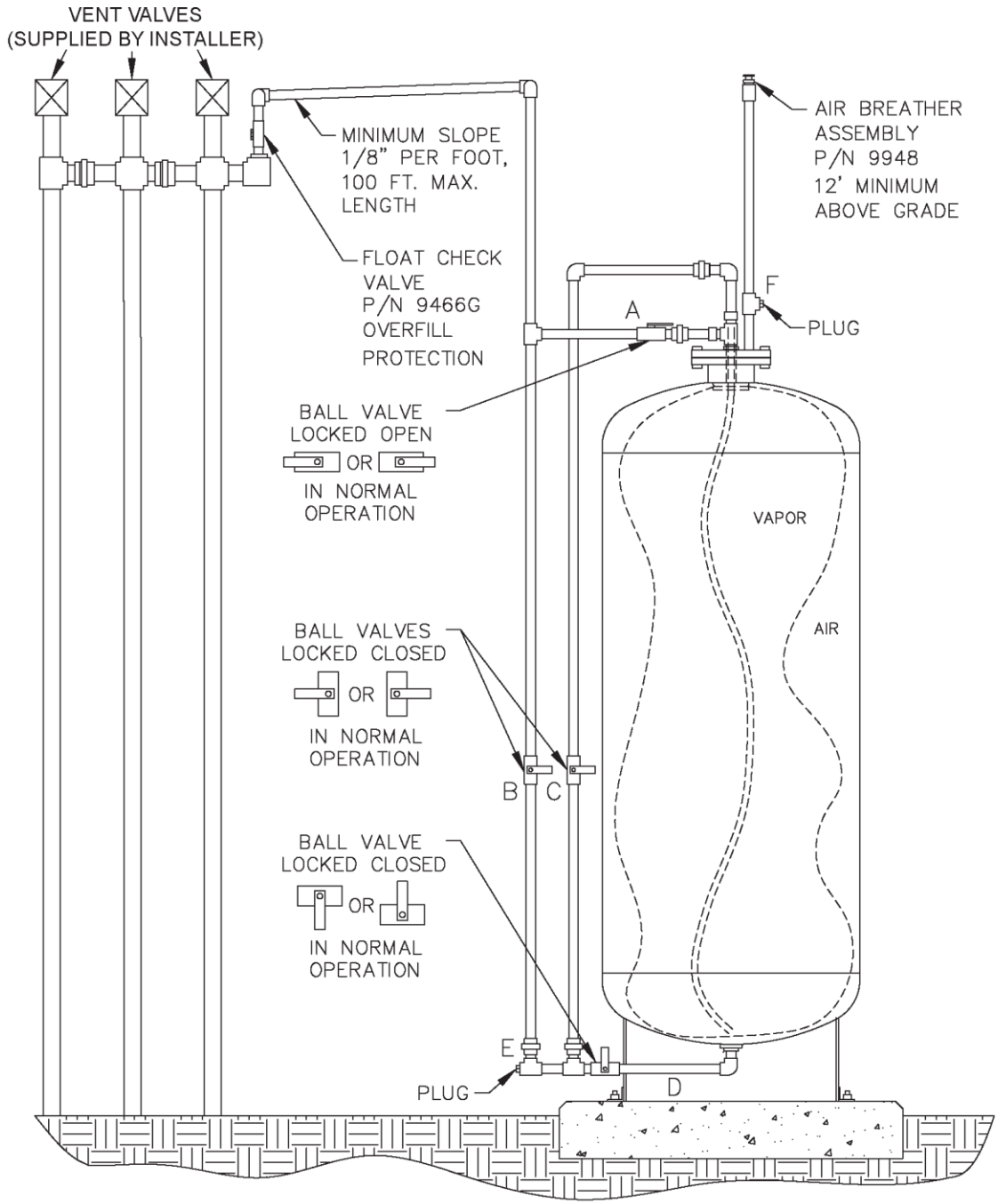

FIGURE 2-5H
Typical Installation of a Three P/V Vent Valve Parallel Manifold with Healy Clean Air Separator

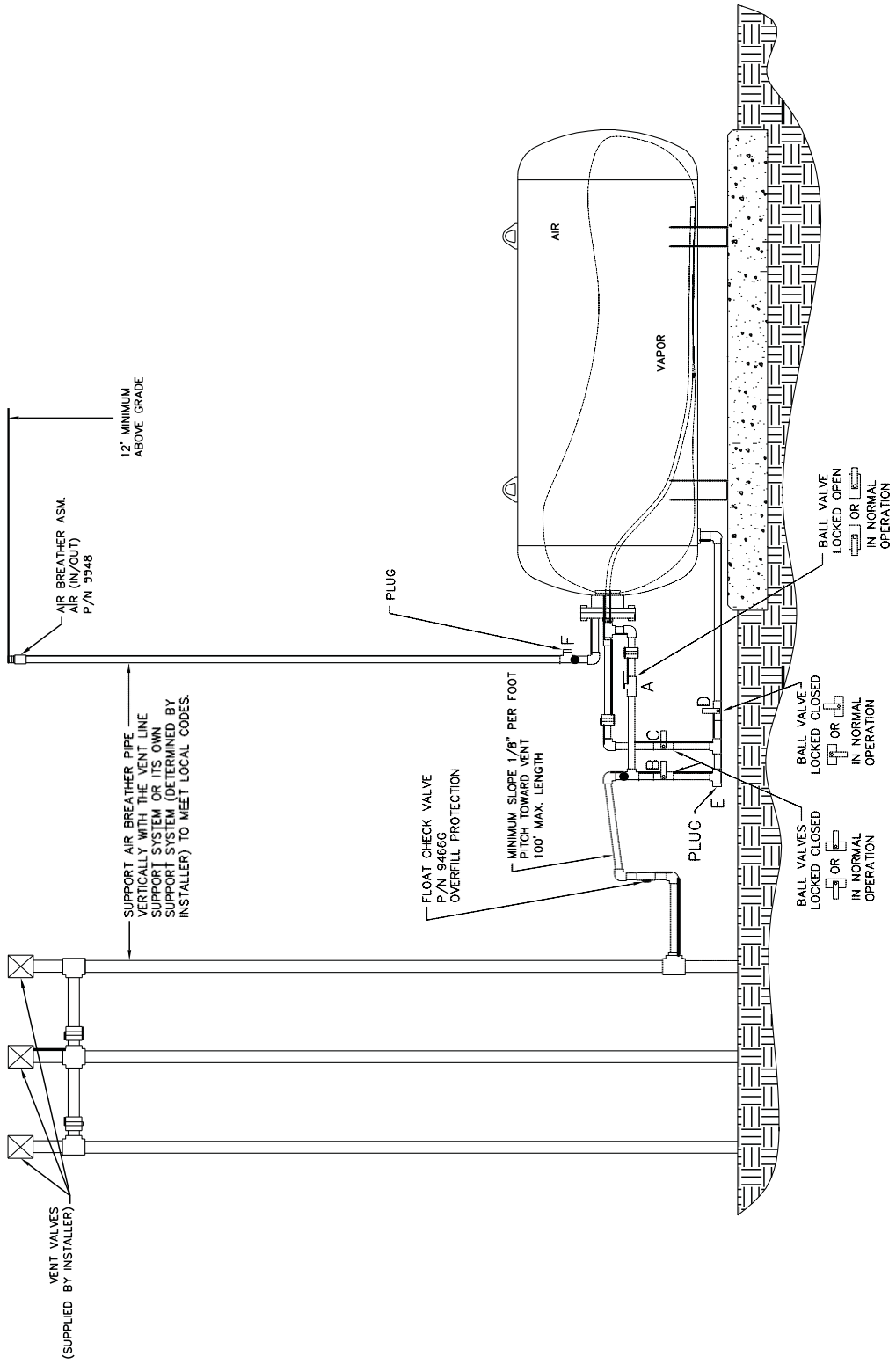

FIGURE 2-6
Typical Configuration of a P/V Vent Valve Mounted on a Single 3" Vent Line with the Clean Air Separator

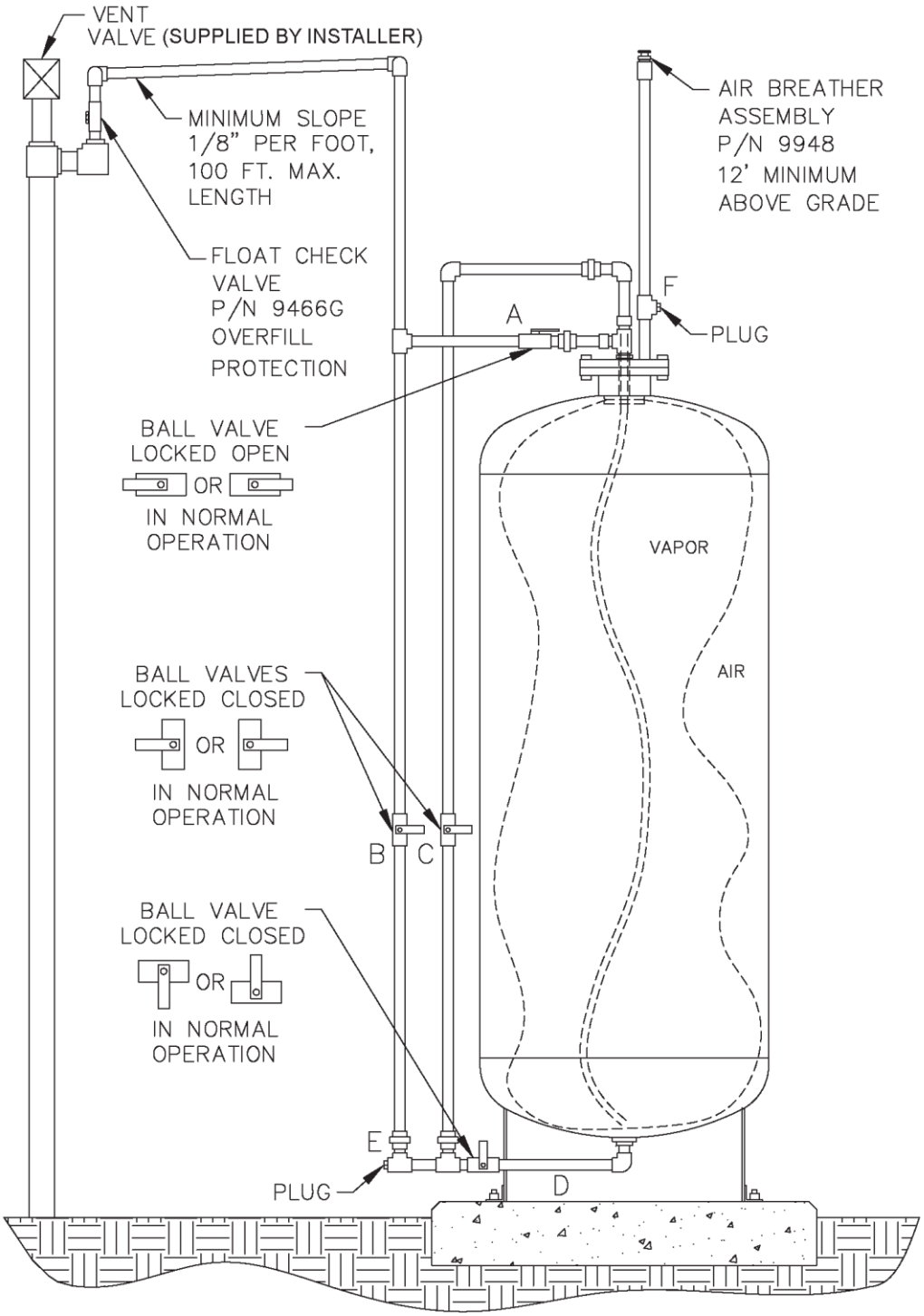

FIGURE 2-6H
Typical Configuration of a P/V Vent Valve Mounted on a Single 3" Vent Line with the Clean Air Separator

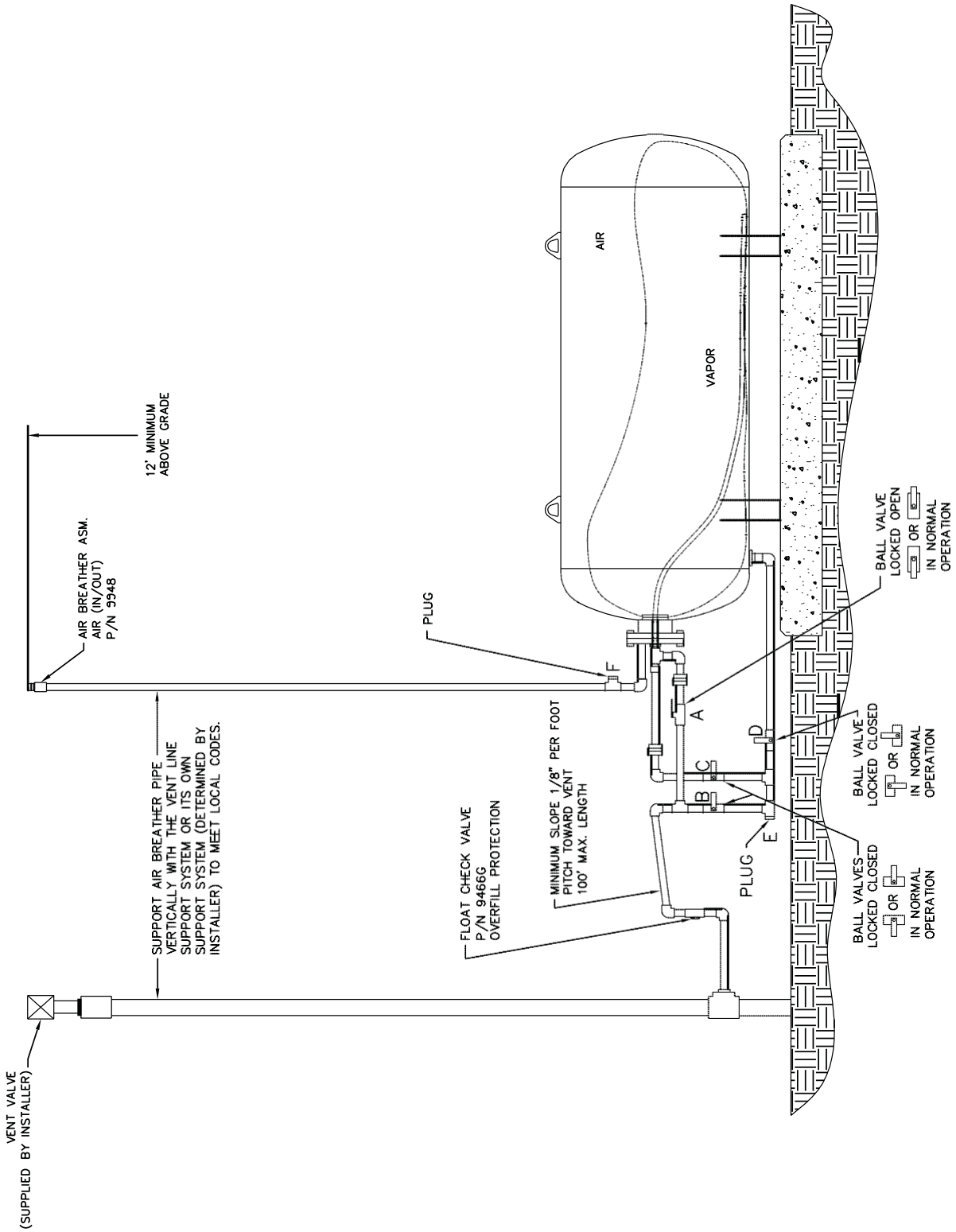

FIGURE 2-7
Maintenance Tracker Technician Key

FIGURE 2-8
Interface Module RS232/485
Dual Module with DB9 Converter or
Single Port Module with DB-25 converter

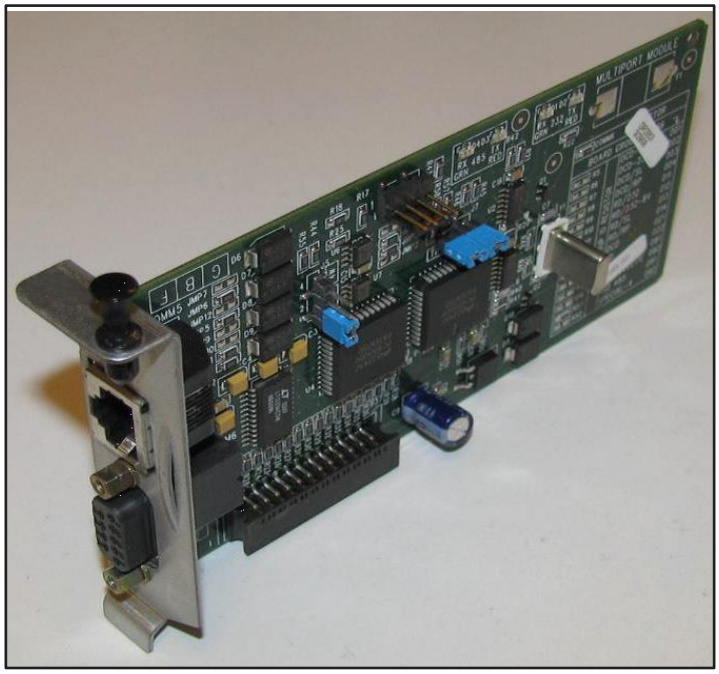

FIGURE 2-9
Example of a GDF Maintenance Record and Alarm History

Date of Maintenance / Test / Inspection/ Failure / Alarm History (including date and time of maintenance call)	Repair Date To Correct Test Failure	Maintenance/Test/Inspection Performed and Outcome	Affiliation	Name and Technician ID number of Individual Conducting Maintenance or Test	Telephone Number

SECTION II - In-Station Diagnostics Systems

Option 1 - Veeder-Root ISD System Specifications

TLS Console & ISD Software Version Number

The ISD audible alarms shall be installed at a location that is most likely to be heard by the station attendant during normal station operation (e.g., cash register). The TLS console shall be installed in a location that allows the RS232 port to be easily accessible, and if applicable, per district requirements, for use at anytime. A vacant RS232 serial port shall always be available to electronically download reports.

The presence of ISD and the ISD software version number can be verified on the TLS Console LCD screen by using the <STEP> key or by using the TLS Console <PRINT> key to print and review the latest ISD Daily Report. **See Figure 2-ISD-VR-1** and **2-ISD-VR-2** for TLS and ISD verification instructions.

The TLS Console must have a printer as well as an RS232 interface port.

If the TLS is equipped with security features which prohibit access to the TLS, instructions to override these security features shall be maintained on site in accordance with air district requirements and shall be available to the air district upon request.

Table 1 provides a list of expiration dates for each ISD Software version.

If Veeder-Root's "Maintenance Tracker" is installed and enabled, access to the "diagnostic mode" and "set-up mode" of the TLS Console is prohibited unless a Maintenance Tracker Technician Key or personal computer equipped with Veeder-Root's ISD Setup Tool Software Version 1.09 or higher is made available. Maintenance Tracker is an optional security device designed to prevent unauthorized tampering and clearing of Veeder-Root tank monitoring and ISD alarms. Maintenance Tracker resides within the TLS console and when enabled, a message will appear on the two line display of the TLS console. For additional instructions on how to access the desired parameters to complete this test procedure, see Exhibit 12 Veeder-Root Maintenance Tracker (Optional).

TABLE 1
Veeder-Root ISD System Software Version Expiration Dates

Phase II EVR System Description	Software Version	Last Date Software May Remain In Use	Notes
Healy (Assist) VR-202 Series	Version 1.00	12/15/2010	Subject GDFs must upgrade to the certified software version (1.01 or later)
	Version 1.01* for Multi-Product (six pack) Dispensers with Fuel Blending	07/01/2012	Only applies to GDFs equipped with multi-product dispensers with fuel blending. Does not apply to GDFs equipped with uni-hose dispensers with fuel blending. Subject GDFs must upgrade to the certified software version (1.02 or later)
	Version 1.02, 1.03, 1.04	N/A	May Remain in Use at Existing Facilities
	Version 1.05	N/A	Required for New Installations and Major Modifications

*Existing sites equipped with Veeder-Root Software Version 1.01 may remain in use only if equipped with uni-hose or muliti-product dispenser without fuel blending.

Operability Test Procedure

The Veeder-Root ISD operability test procedure provided in Exhibit 9, and in section 4 of the ***ARB Approved Installation, Operation and Maintenance Manual***, shall be used at GDF sites to determine the operability of the Veeder-Root ISD system to comply with applicable performance standards and performance specification in CP-201. Testing the ISD equipment in accordance with this procedure will verify the proper selection, setup and operation of the TLS Console sensors and interface modules.

The Vapor Flow Meter

The Veeder-Root ISD system requires one Vapor Flow Meter per dispenser installed via the ***ARB Approved ISD Vapor Flow Meter Manual 577013-796, Rev. E for the Veeder-Root ISD System***. The Vapor Flow Meter shall be installed into dispensers listed in Exhibit 1 of this Executive Order in accordance with the ***ARB Approved Installation, Operation and Maintenance Manual***. The Vapor Flow Meter is an intrinsically safe sensor that is wired to the TLS Console Smart Sensor Module via a conduit dedicated to TLS Console low-voltage sensors. **Figure 2-ISD-VR-3** shows the ISD Vapor Flow Meter. **Figures 2-ISD-VR-7** and **2-ISD-VR-8** show the installation configuration. **Figure 2-ISD-VR-10** shows the wireless components for Veeder-Root ISD. **Figure 2-ISD-VR-11** shows a typical installation of the wireless VFM transmitter in a dispenser.

The Vapor Pressure Sensor

The Veeder-Root ISD system requires one Vapor Pressure Sensor per GDF installed into one of the dispensers located closest to the gasoline tanks (If a row of dispensers are equal distance from the gasoline tank pad and within 10' of each other, any dispenser can be used) in accordance with the ***ARB Approved Installation, Operation and Maintenance Manual***. The Vapor Pressure sensor shall be installed into dispensers listed in Exhibit 1 of this Executive Order. For vapor vent stack installation, install the pressure sensor on the vent stack line closest to the tank being monitored, in accordance with Section 21 of the **ARB Approved IOM Manual**. The Vapor Pressure Sensor is an intrinsically safe sensor that is wired to the TLS Console Smart Sensor Module via a conduit dedicated to TLS Console low-voltage sensors. **Figure 2-ISD-VR-4** shows wired and low voltage wireless ISD Vapor Pressure Sensor drawings, and the optional dryer tube drawing. **Figures 2-ISD-VR-7** and **2-ISD-VR-8** show the installation configuration. **Figure 2-ISD-VR-9** shows the installation configuration of the Veeder-Root vapor pressure sensor on a vapor vent stack. **Figure 2-ISD-VR-10** shows the wireless vapor flow meter components. **Figure 2-ISD-VR-12** shows an Overview of Veeder-Root Wireless Vapor Pressure Sensor Vent Stack Installation.

Dispenser Interface Module (DIM)

Existing Dispenser Interface Modules or DIM communication cards are used to interface to the dispenser Point Of Sale (POS) or controller system to gather fuel transaction data. The ISD Operability Test Procedure provided in Exhibit 9 and in Section 4 of the Veeder-Root ISD Install, Setup and Operation Manual can be used to verify the proper selection and setup of the Dispenser Interface Module. See **Figure 2-ISD-VR-5** for a typical Dispenser Interface Module Illustration.

Tank Inventory Probe Sensor

Existing Tank Inventory Probe sensors (one per gasoline storage tank) are used to measure the amount of vapor space in the Underground Storage Tanks (USTs). The ISD Operability Test Procedure can be used to verify the proper selection and setup of the Tank Inventory Probes. See **Figure 2-ISD-VR-6** for a typical Tank Inventory Probe Sensor.

Shutdown Control

The TLS Console must be wired per the Veeder-Root ISD Install, Setup and Operation Manual 557013-800, Rev. E of the ARB Approved Installation, Operation and Maintenance Manual for the Assist Phase II EVR System Including the Veeder-Root ISD System such that it shall automatically prohibit the dispensing of individual dispensers or through shutdown of all the gasoline turbine pumps during a CP-201 ISD failure alarm. It shall also automatically prohibit the dispensing of all dispensers during TLS Console ISD system power loss.

TLS Console Modules

The ISD Operability Test Procedure in Exhibit 9 and in section 4 of the Veeder-Root ISD Install, Setup, and Operation Manual of the ***ARB Approved Installation, Operation, and Maintenance Manual*** shall be used to verify the proper selection and setup of the TLS Console Modules.

Training Program

All Veeder-Root contractors must successfully complete the applicable Veeder-Root training program before they can install, startup, and service TLS Console equipment as shown in the following table:

TABLE 2
Veeder-Root Contractor Training Certification Requirement

Veeder-Root Contractor Certification Requirements	Installer Certification [6]	ATG Technician Certification [7]	VR Vapor Products Certification [8]
Install[1] ISD	●	●	●
Install PMC	●	●	●
Install CCVP	●	●	●
Install Wireless ISD/PMC	●	●	●
Installation Checkout[2]		●	●
ATG Startup[3] / Training[4] / Service[5]		●	●
ISD Startup / Training / Service			●
PMC Startup / Training / Service			●
CCVP Startup / Training / Service			●
Wireless ISD/PMC Startup / Training / Service			●
Install Pressure Sensor (ATG)	●	●	●
Maintain Pressure Sensor (ATG)		●	●
Calibrate Pressure Sensor (ATG)		●	●
Clear ATG Pressure Sensor Alarm (ATG)		●	●
Clear ISD/ PMC alarms (ISD/PMC)		●	●

NOTE: A current Veeder-Root Installer Certification is a prerequisite for the ATG Technician Certification course.

[1] Perform wiring and conduit routing; equipment mounting
[2] Inspect wiring and conduit routing; equipment mounting
[3] Turn power on, program and test the systems
[4] Provide supervised field experience in service techniques and operations
[5] Troubleshoot and provide routine maintenance as specified in the IOM
[6] UST Monitoring Systems – Installer (Level 1)
[7] Certified UST Monitoring Technician
[8] VR Vapor Products

The schedule, fee and registration information for the Authorized Service Contractor (ASC) training program can be found at http://www.veeder.com. To confirm TLS or ISD training a regulator should send an email to technicaltraining@gilbarco.com with the name (and company) of the ASC to obtain verification of the ASC TLS/ISD training status or call 800-997-7725 and press “4” to get to the Veeder-Root menu and then “*” to speak to a representative or sign on to the Gilbarco Learning Suite at http://wise.gilbarco.com.

Maintenance

The TLS console, including interface modules, do not require scheduled maintenance. ISD System Self-Test Monitoring algorithms are designed to verify proper selection, setup and operation of the TLS console and sensors.

There is no recommended maintenance, inspection nor calibration for the Vapor Flow Meter or the Vapor Pressure Sensor. Servicing should be performed in response to warning or alarm conditions.

RF Wireless Components

The Veeder-Root wireless components must be installed in accordance with I**OM 28: TLS RF Wireless 2 System (W2) Installation and Maintenance Guide of the ARB Approved IOM.** The wireless system consists of the following devices (Figure 2-ISD-VR-10)

a. RF Receiver-2
b. RF Repeater-2
c. RF Transmitter-2
d. RF Battery Pack
e. TLS RF Console-2 Box

These devices convert data in smart-sensor-protocol format to RF format and back to smart-sensor format for TLS such that TLS software assumes it is directly connected to the sensor. The transmitter automatically identifies the Flow Meter connected to it and polls it periodically. The collected data is converted to radio format and transmitted through air to receiver. The receiver collects the radio packet and within 200ms sends the data to the TLS RF on RS485 bus. The TLS RF provides this data to TLS on next poll by TLS. To prevent adjacent GDF with wireless equipment from interfering with each others transmissions, dip switches on the Transmitter and Receiver are used to configure a site ID. The Repeater is not required, but may be installed as needed to provide a second path for the wireless signal traveling from Transmitter to Receiver.

FIGURE 2-ISD-VR-1
Finding the Veeder-Root ISD Version Number

Use the TLS Console <FUNCTION> key to find the ISD Daily Report menu:

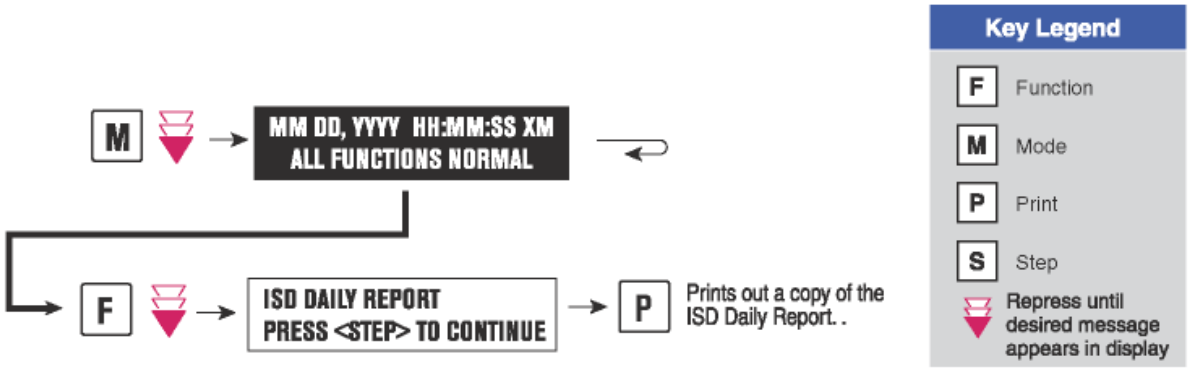

The ISD version number can be verified on the TLS Console LCD screen using the <STEP> key or by using the TLS Console <PRINT> key to print and review the latest ISD Daily Report:

Presence of the ISD Daily Report menu and correct ISD software version number is evidence that ISD is installed and activated in the TLS Console.

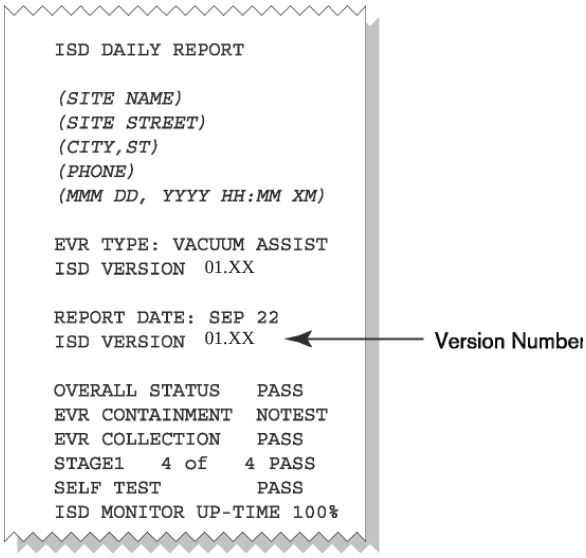

FIGURE 2-ISD-VR-2
Standard TLS Console

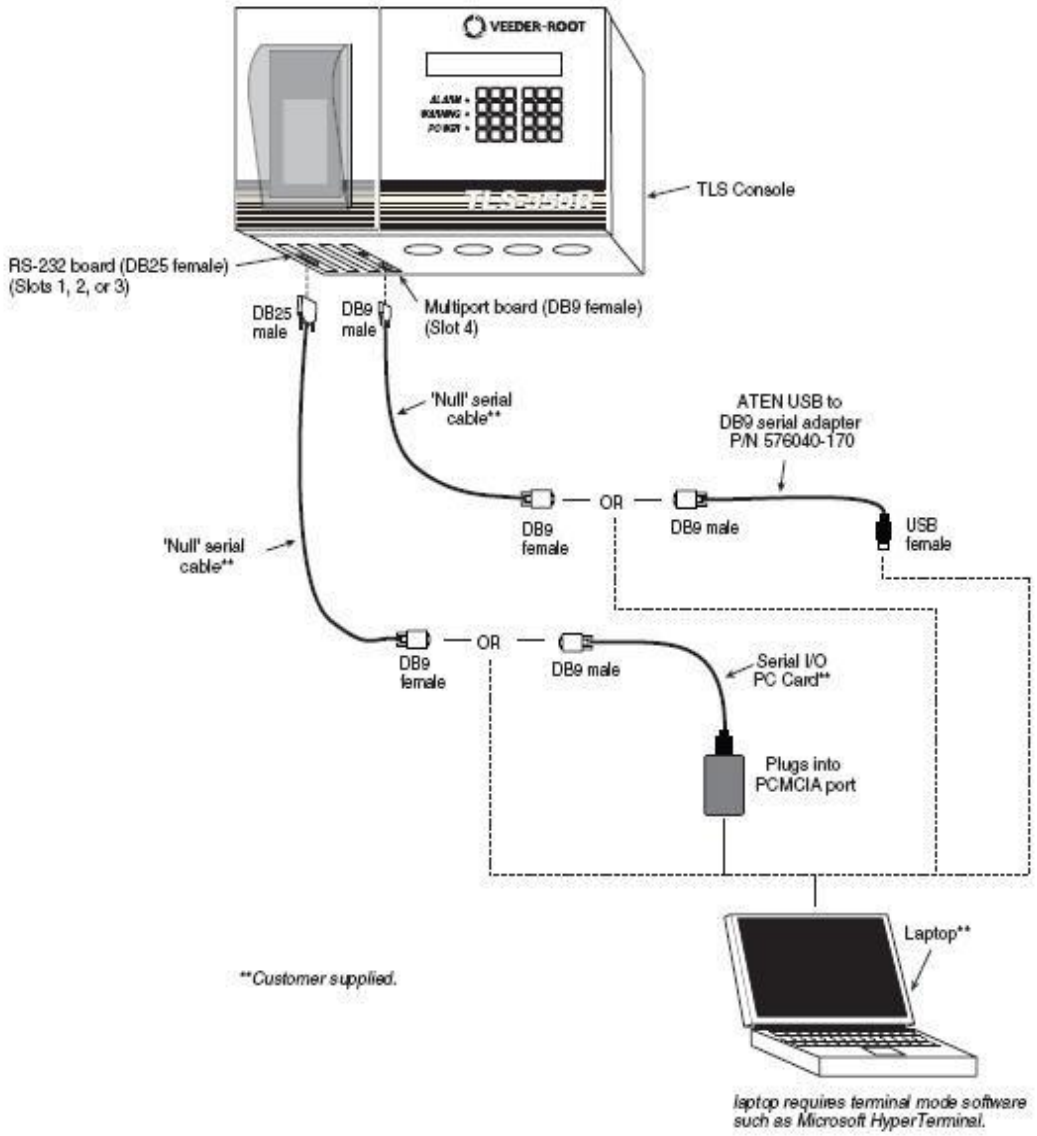

FIGURE 2-ISD-VR-3
Vapor Flow Meter
Veeder-Root 331847-XXX

FIGURE 2-ISD-VR-4
Vapor Pressure Sensor

FIGURE 2-ISD-VR-4a
Wired Vapor Pressure Sensor
Veeder-Root 331946-001

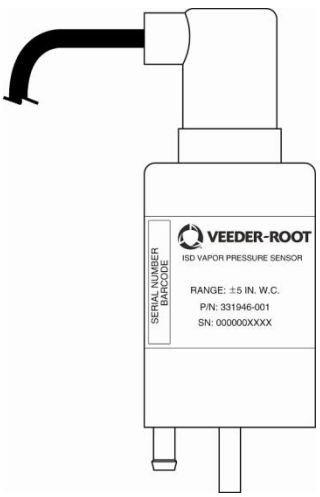

FIGURE 2-ISD-VR-4b
Low Powered Wireless Vapor Pressure Sensor
Veeder-Root 861190-201

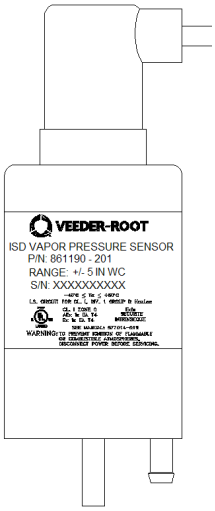

FIGURE 2-ISD-VR-4c
Dryer Tube (Optional)
Veeder-Root 330020-717

FIGURE 2-ISD-VR-5
Veeder-Root
Dispenser Interface Module (DIM)

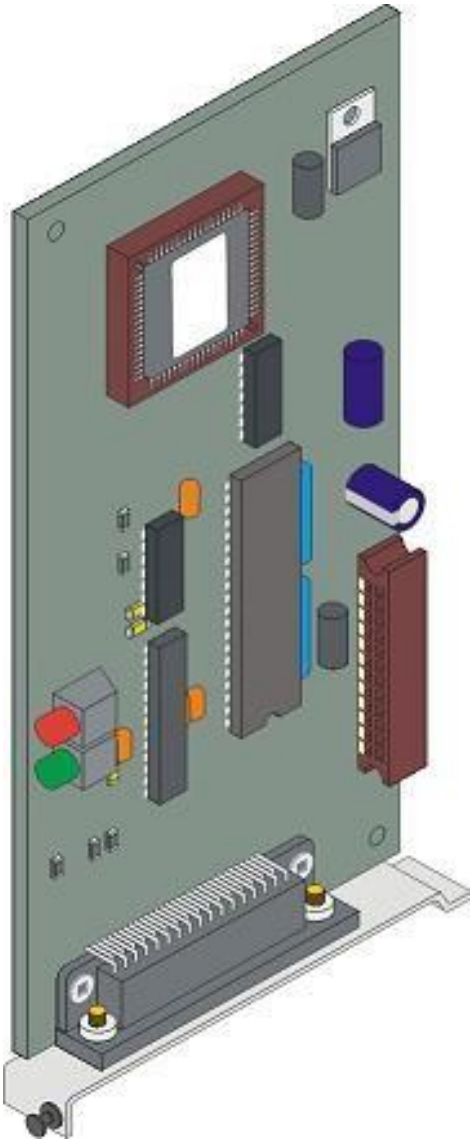

FIGURE 2-ISD-VR-6
Tank Inventory Probe Sensor

FIGURE 2-ISD-VR-7
Typical Installation of the Veeder-Root Vapor Pressure Sensor & Vapor Flow Sensor

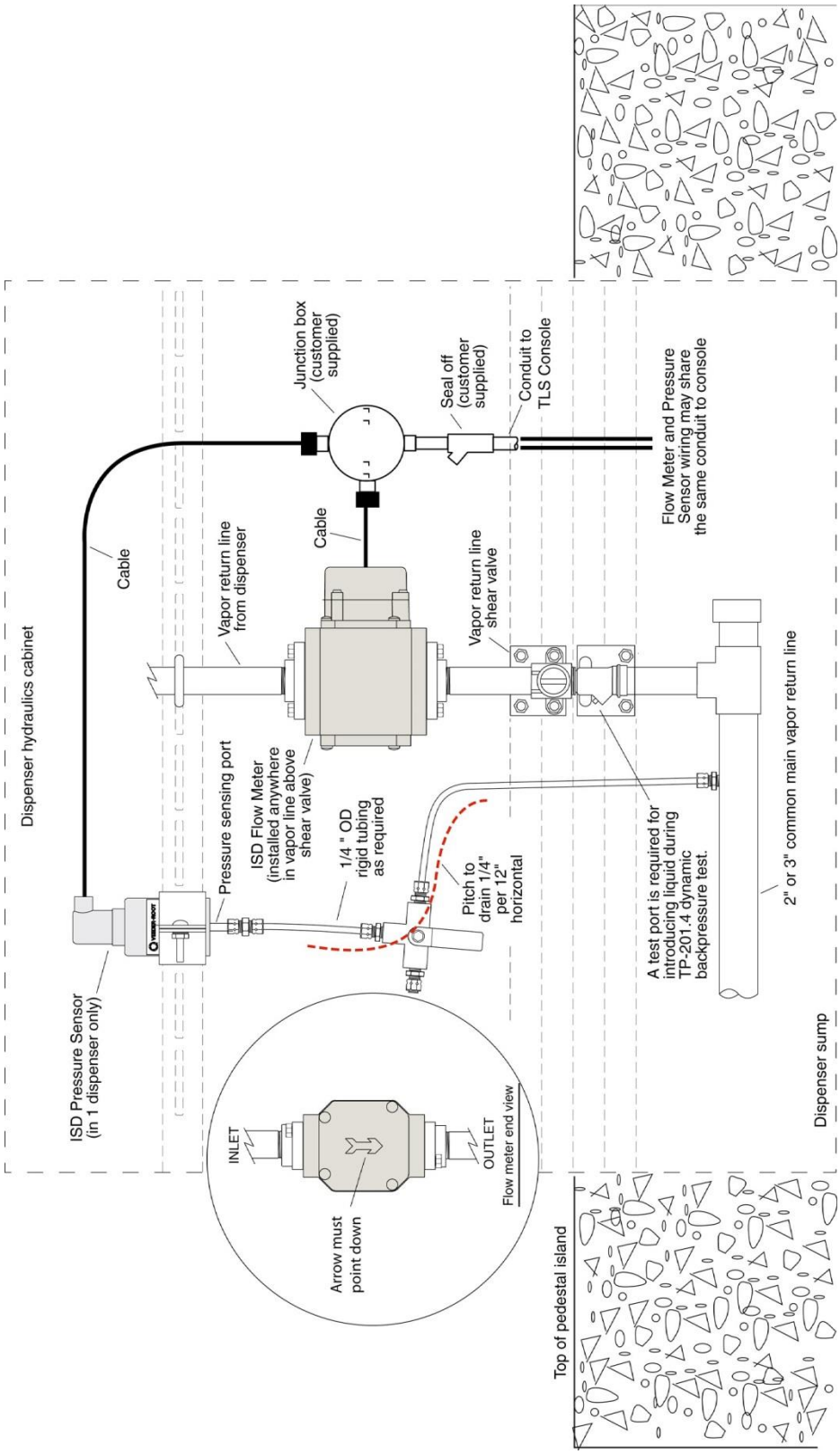

FIGURE 2-ISD-VR-8
Typical Installation of the Veeder-Root Vapor Pressure Sensor and Vapor Flow Sensor

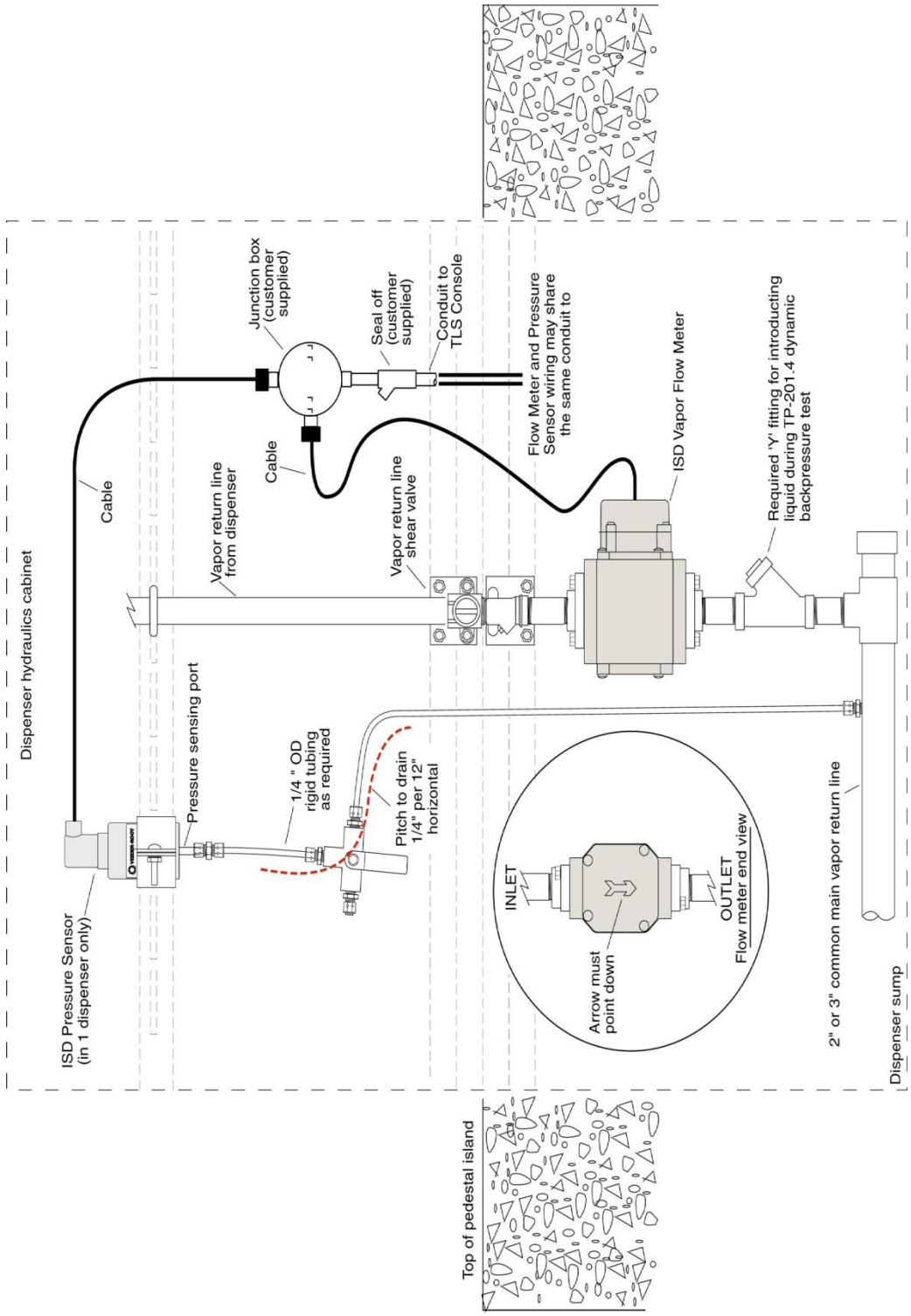

FIGURE 2-ISD-VR-9
Typical Installation of the Veeder-Root Vapor Pressure Sensor on a vapor vent stack

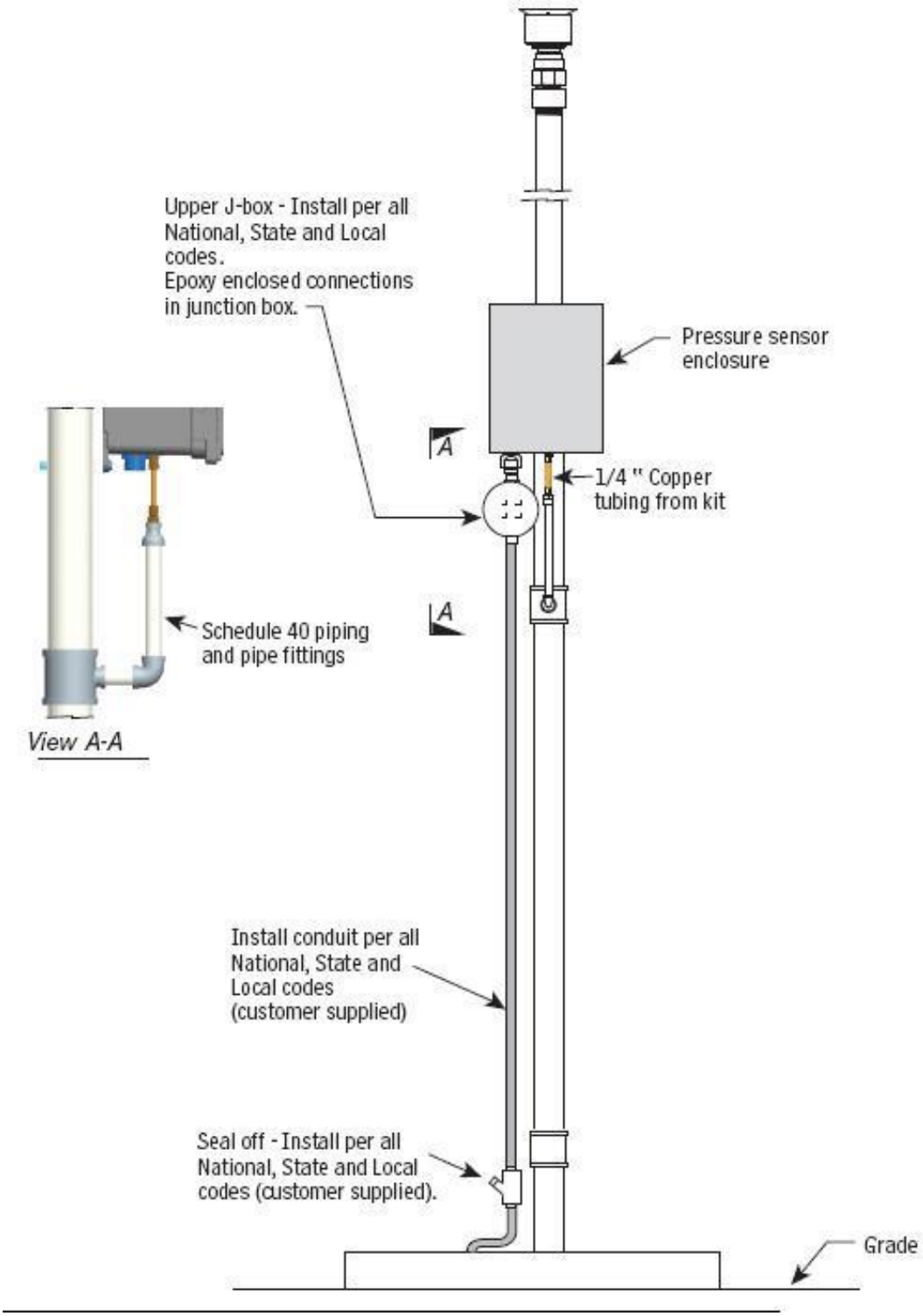

FIGURE 2-ISD-VR-10
Wireless Components for Veeder-Root ISD

RF Receiver-2

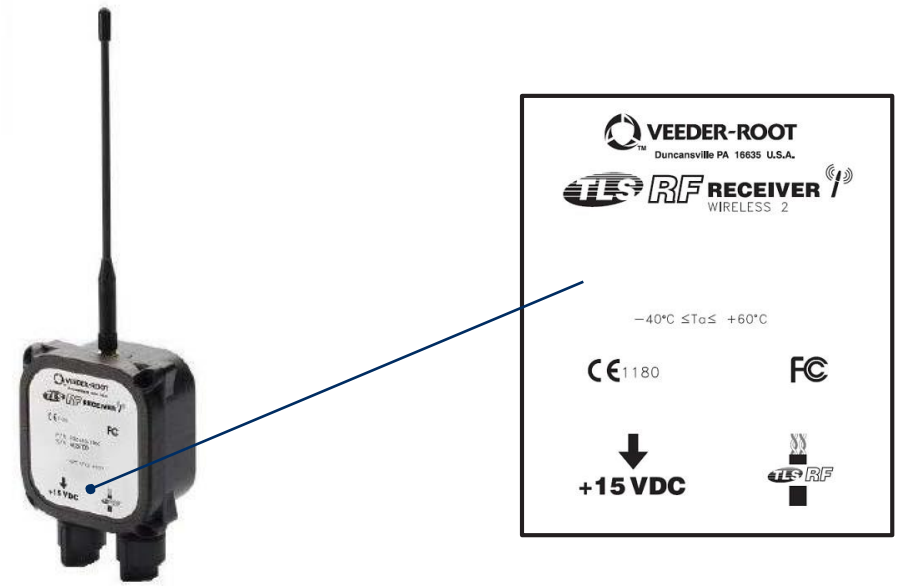

RF Repeater-2

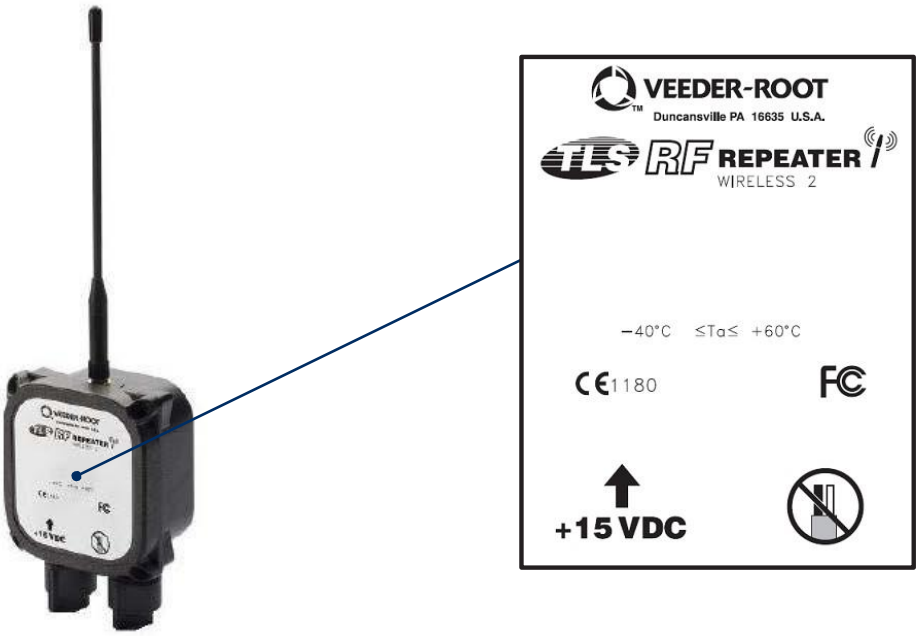

FIGURE 2-ISD-VR-10 (continue)
Wireless Components for Veeder-Root ISD

RF Transmitter-2

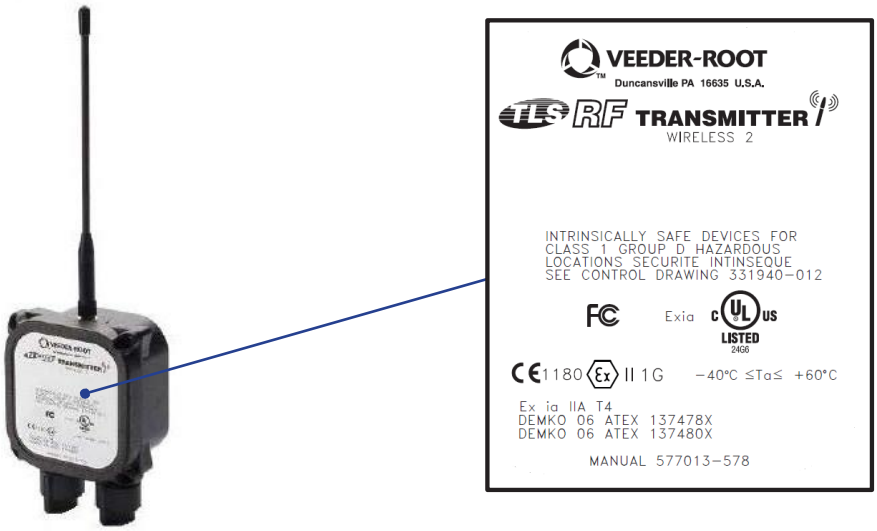

RF Battery Pack

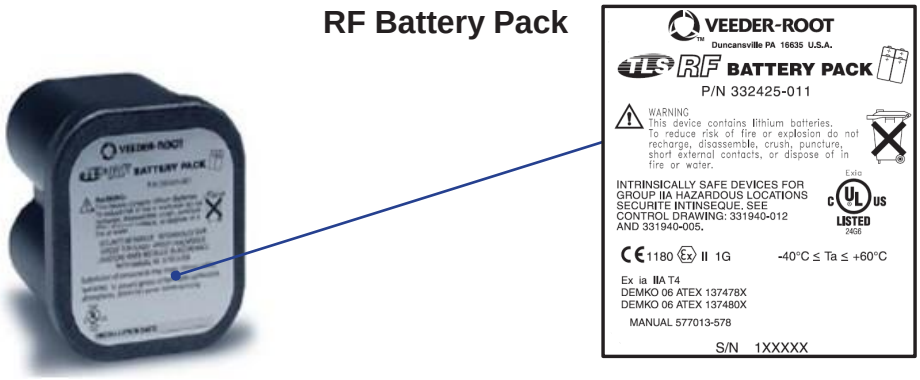

TLS RF Console-2

FIGURE 2-ISD-VR-11
Typical Installation of the Veeder-Root Vapor Flow Meter with VFM Transmitter in Dispenser

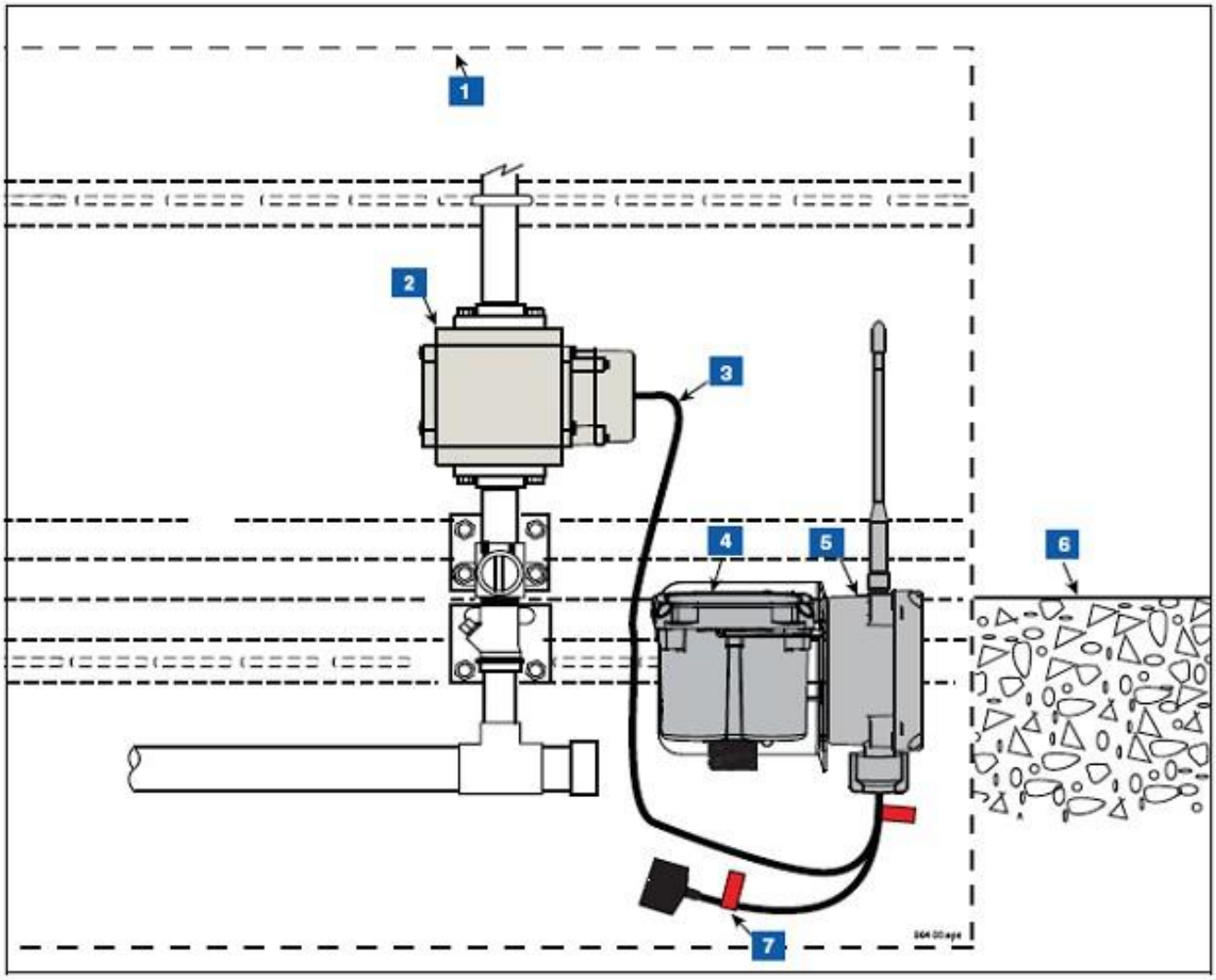

	Legend for Numbers Boxes in Figure 2-ISD-VR-11		
1.	Base of Dispenser cabinet VFM Transmitter	5.	Transmitter
2.	VFM	6.	Top of Dispenser Pedestal
3.	VFM cable	7.	Battery caution label attached to battery cable (2 places)
4.	Battery Pack		

FIGURE 2-ISD-VR-12
Overview of Veeder-Root Wireless Vapor Pressure Sensor Vent Stack Installation

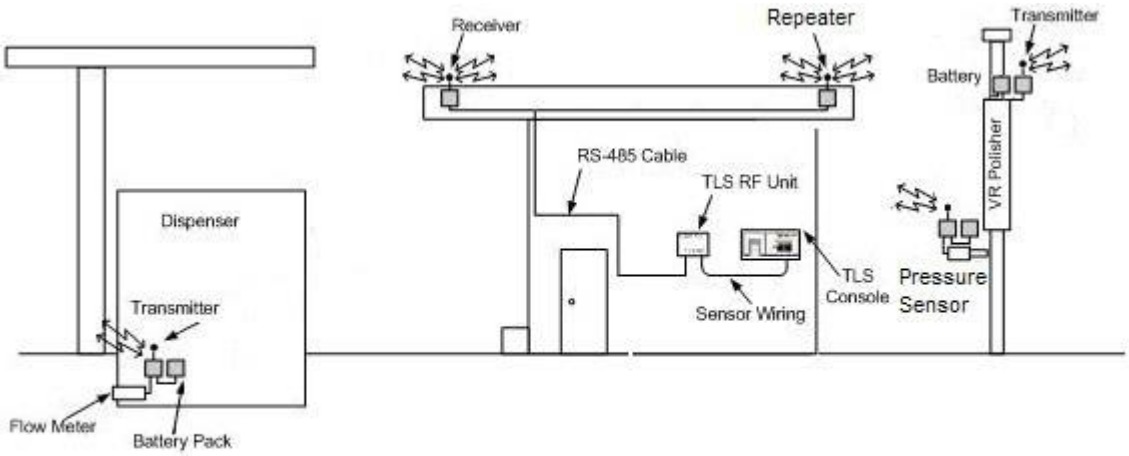

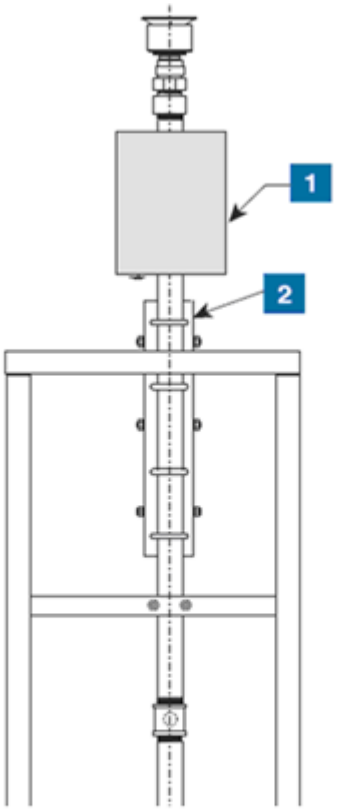

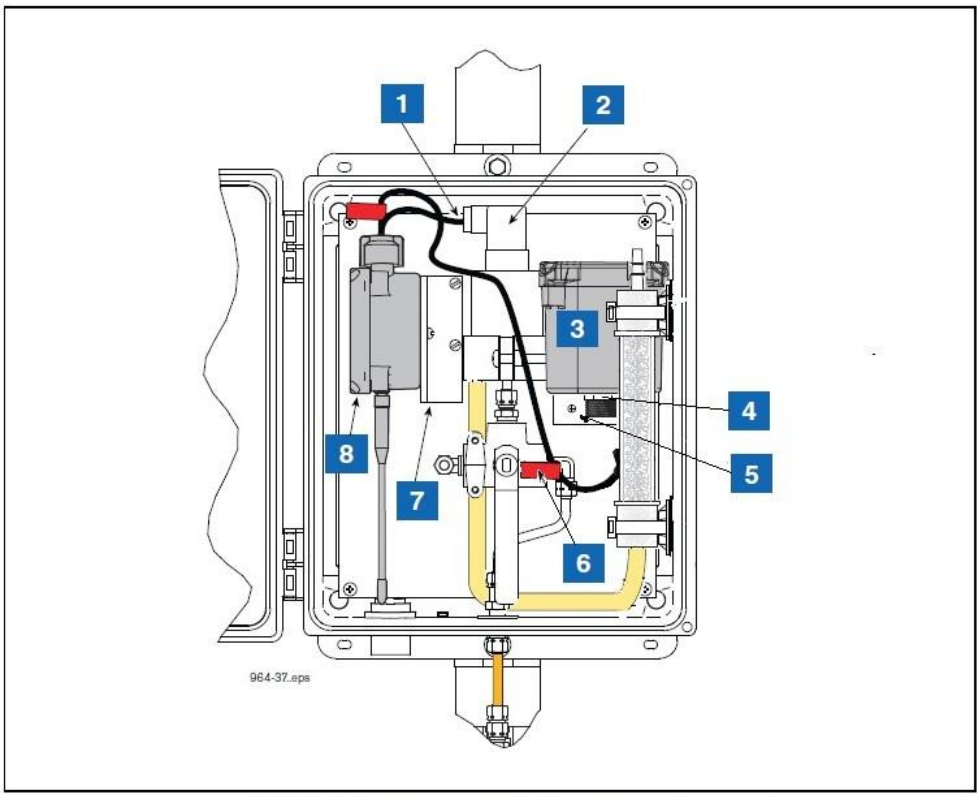

Example VRPS transmitter/battery pack installation in vent stack enclosure

1. CCVP transmitter/battery enclosure on vent stack
2. CCVP support bracket

LEGEND FOR NUMBERED BOXES	
1. VRPS cable	5. Attach Battery L bracket using two #10 taptite screws
2. VRPS	6. Battery caution label attached to battery cable (2 places)
3. Battery pack	7. Attach Transmitter L bracket using two #10 taptite screws
4. Thin hex nut	8. Transmitter

SECTION II - In-Station Diagnostics Systems

Option 2 - INCON Vapor Recovery Monitoring (VRM) System Specifications

Console & VRM Software Version Number

The ISD audible alarms shall be installed at a location that is most likely to be heard by the station attendant during normal station operation (e.g., cash register). The console shall be installed in a location that allows the Ethernet or RS232 port (COMM 1) to be easily accessible, and if applicable, per district requirements, for use at anytime. A vacant RS232 serial port (COMM 1) shall always be available to electronically download reports.

The presence of VRM and the VRM software version number can be verified on the Console touchscreen screen by pressing the VRM Icon key or by printing a VRM Daily or Monthly Report. See **Figure 2-ISD-INCON-1** for the verification instructions.

The Console must have a printer.

The Console is equipped with password security features which prohibit the ability to make changes to the system. Instructions and passwords shall be maintained on site in accordance with air district requirements and shall be available to the air district upon request.

Table 2 below provides a list of expiration dates for each ISD Software version.

TABLE 2
INCON ISD System Software Version Expiration Dates

Phase II EVR System Description	Software Version	Last Date Software May Remain In Use	Notes
Assist VR-202 Series	Version 1.0.0 and 1.1.0 for Multi-Product (six pack) Dispensers	01/01/2014	Does not apply to GDFs equipped with unihose dispensers. Subject GDFs must upgrade to the certified software version (1.2.0 or later)
	Version 1.2.0 for Multi-Product (six pack) Dispensers	N/A	May Remain in Use at Existing Facilities Required for New Installations and Major Modifications

Operability Test Procedure

The INCON VRM operability test procedure provided in Exhibit 10, and in the VRM Operability Testing section of the **ARB Approved Installation, Operation and Maintenance Manual**, shall be used at GDF sites to determine the operability of the INCON VRM system to comply with applicable performance standards and performance specification in CP- 201. Testing the VRM equipment in accordance with this procedure will verify the proper selection, setup and operation of the Console sensors and interface modules.

Vapor Flow Meter

The INCON VRM system requires one Vapor Flow Meter per dispenser installed via the ARB Approved Vapor Flow Meter Manual 000-2144, Rev. A. The Vapor Flow Meter shall be installed into dispensers listed in Exhibit 1 of this Executive Order in accordance with the **ARB Approved Installation, Operation and Maintenance Manual**. The Vapor Flow Meter is an intrinsically safe sensor that is wired to the Console Probe Module or TS-DTU Module via a conduit dedicated to low-voltage sensors. **Figure 2-ISD-INCON-3** shows the Vapor Flow Meter. **Figure 2-ISD-INCON-5** shows the installation configuration.

Vapor Pressure Sensor

The INCON VRM system requires one Vapor Pressure Sensor per GDF installed into one of the dispensers located with the shortest run to the underground storage tanks (If a row of dispensers are equal distance from the tank pad, any dispenser can be used) in accordance with the **ARB Approved Installation, Operation and Maintenance Manual**. The Vapor Pressure Sensor shall be installed into dispensers listed in Exhibit 1 of this Executive Order. The Vapor Pressure Sensor is an intrinsically safe sensor that is wired to the Console's 4-20mA Module or a TS-DTU Module via a conduit dedicated to low-voltage sensors. **Figure 2-ISD-INCON-4** shows a Vapor Pressure Sensor illustration. **Figure 2-ISD-INCON-6** shows the installation configuration.

Dispenser Interface Module (DIM)

Existing Dispenser Interface Modules or DIM communication cards are used to interface to the dispenser Point Of Sale (POS) or controller system to gather fuel transaction data. The ISD Operability Test Procedure provided in Exhibit 10 and in the **ARB Approved Install, Operators, and Maintenance Manual** can be used to verify the proper selection and setup of the Dispenser Interface Module.

Data Transfer Unit

The optional Data Transfer Unit can be installed as a replacement for underground wire and conduit for both the Vapor Flow Meter and Vapor Pressure Sensor. The TS-DTU must be wired per the INCON Data Transfer Unit Dispenser Retrofit Manual 000-2146, Rev. B of the **ARB Approved Installation, Operation and Maintenance Manual.** A minimum of two units are required when installing DTUs, one in the GDF and one in a dispenser. A single site can mix and match between dedicated cables and DTU installation methods. See Figure 2-21.

Shutdown Control

The Console must be wired per the INCON VRM Install, Operators, and Maintenance Manual 000-2058, Rev. E of the **ARB Approved Installation, Operation and Maintenance Manual** such that it shall automatically prohibit the dispensing of fuel through shutdown of individual dispensers during a CP-201 ISD failure alarm.

Console Modules

The VRM Operability Test Procedure in Exhibit 10 and in the INCON VRM Install, Operators, and Maintenance Manual 000-2058, Rev E of the **ARB Approved Installation, Operation, and Maintenance Manual** shall be used to verify the proper selection and setup of the Console Modules.

Training Program

All INCON contractors must successfully complete the applicable Franklin Fueling Systems training program before they can install, startup, and service INCON Console equipment. Contractors must have up-to-date Level 1 & 2 certifications to install and startup the TS Console. Contractors must have an up-to-date Level 5 certification to install, startup and service the VRM system. The schedule, fee and registration information for the Authorized Service Contractor (ASC) training program can be found at http://techlab.franklinfueling.com.

A list of certified contractors with current console and VRM training will be available at the Franklin Fueling web page, http://techlab.franklinfueling.com/mod/resource/view.php?id=64.

Maintenance

The console, including interface modules, do not require scheduled maintenance. The VRM System uses a Self-Test Monitoring feature that is designed to verify proper selection, setup and operation of the console and sensors. There is no recommended maintenance, inspection nor calibration for the Vapor Flow Meter or the Vapor Pressure Sensor. Servicing should be performed in response to warning or alarm conditions.

FIGURE 2-ISD-INCON-1
Finding the INCON VRM Version Number

Version number on the LCD:

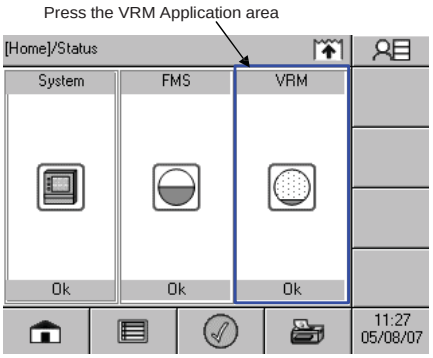

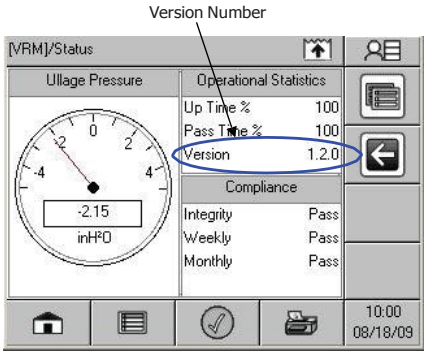

Version number on the VRM Daily Report or Monthly Report:

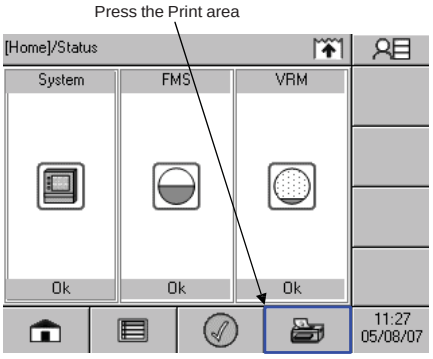

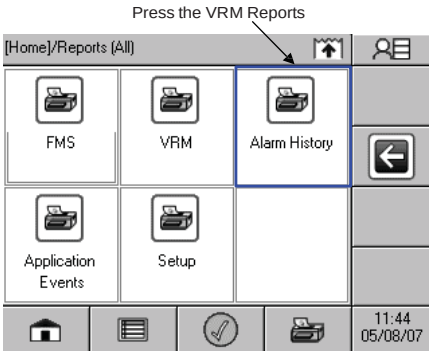

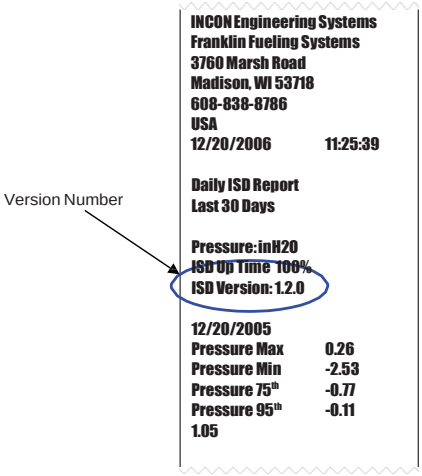

FIGURE 2-ISD-INCON-2
Standard Tank Sentinel Console

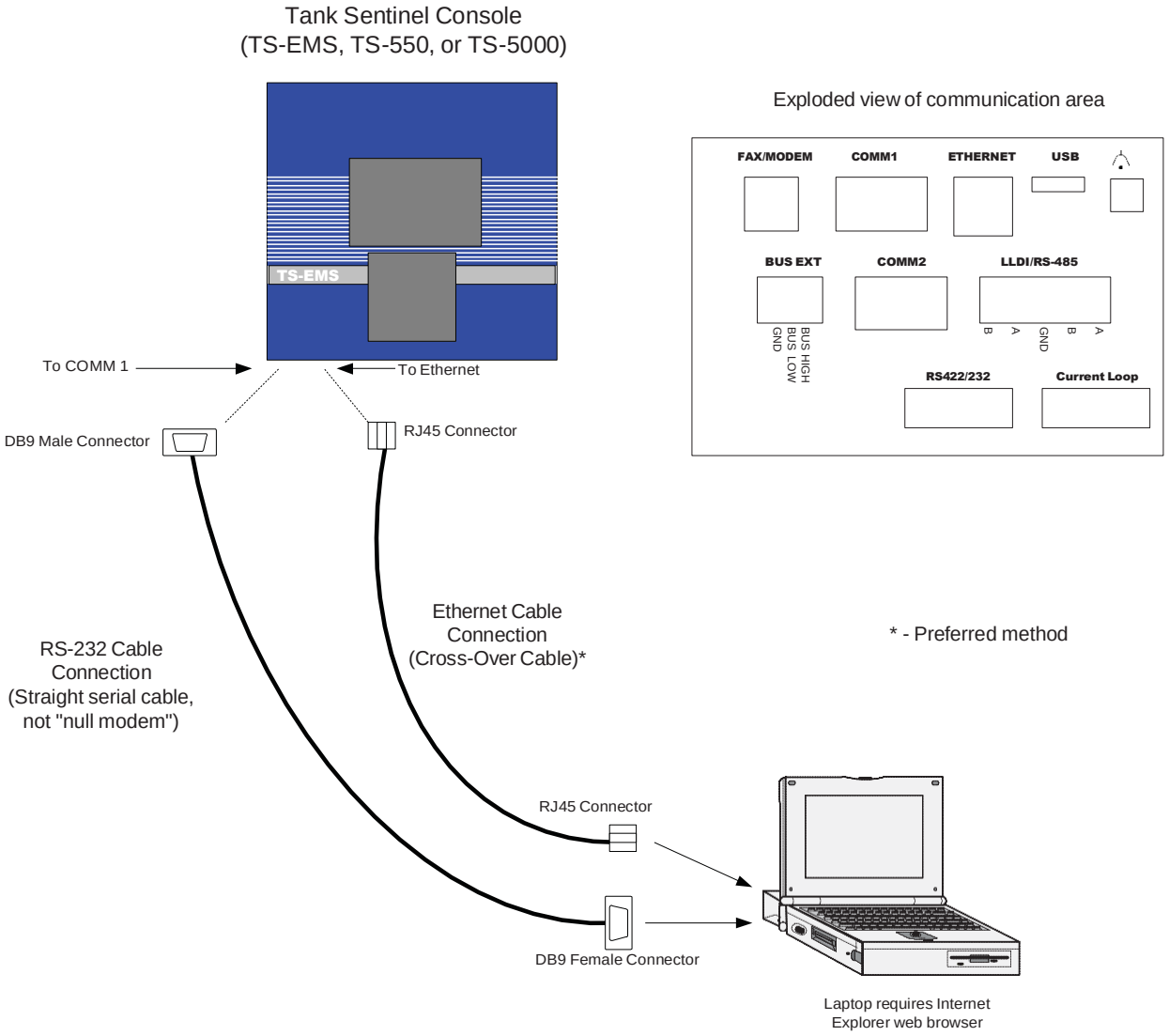

FIGURE 2-ISD-INCON-3
Vapor Flow Meter

INCON TS-VFM

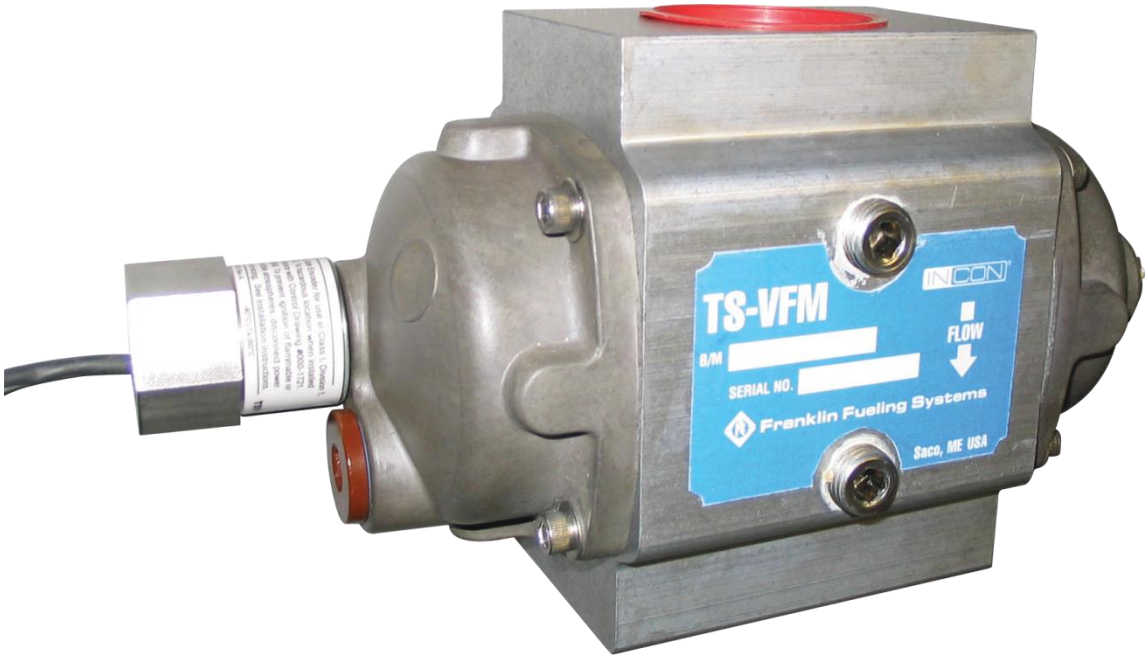

FIGURE 2-ISD-INCON-4
Vapor Pressure Sensor

INCON TS-VPS

FIGURE 2-ISD-INCON-5

Typical Installation of the INCON Vapor Flow Meter

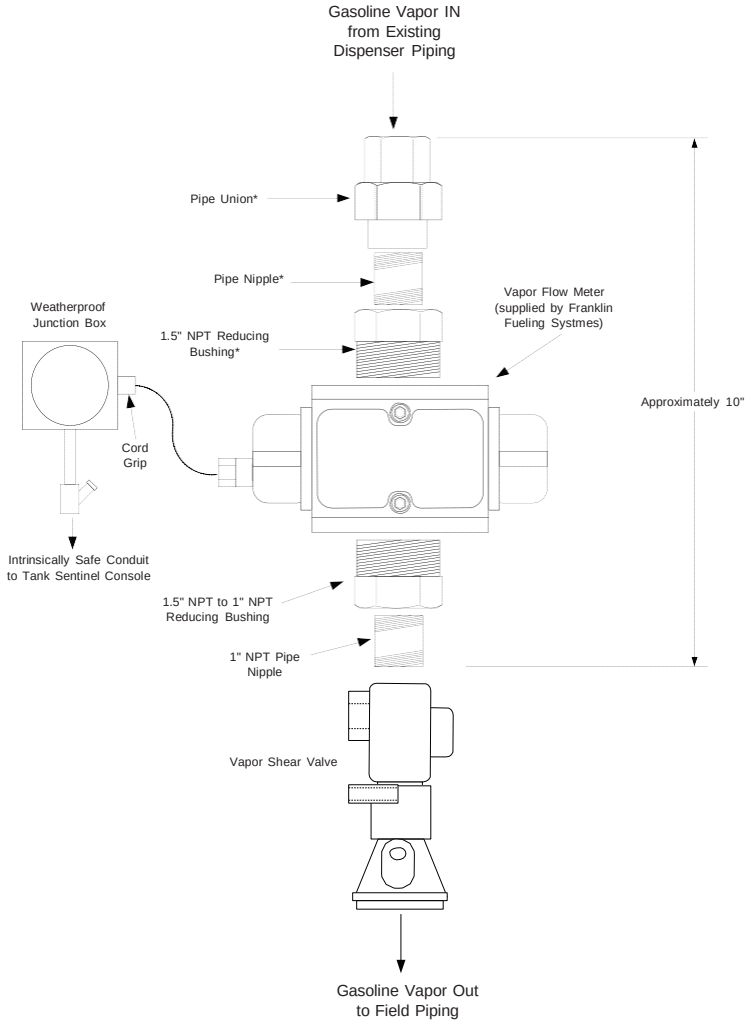

Figure 1
Flow Meter Above Shear Valve

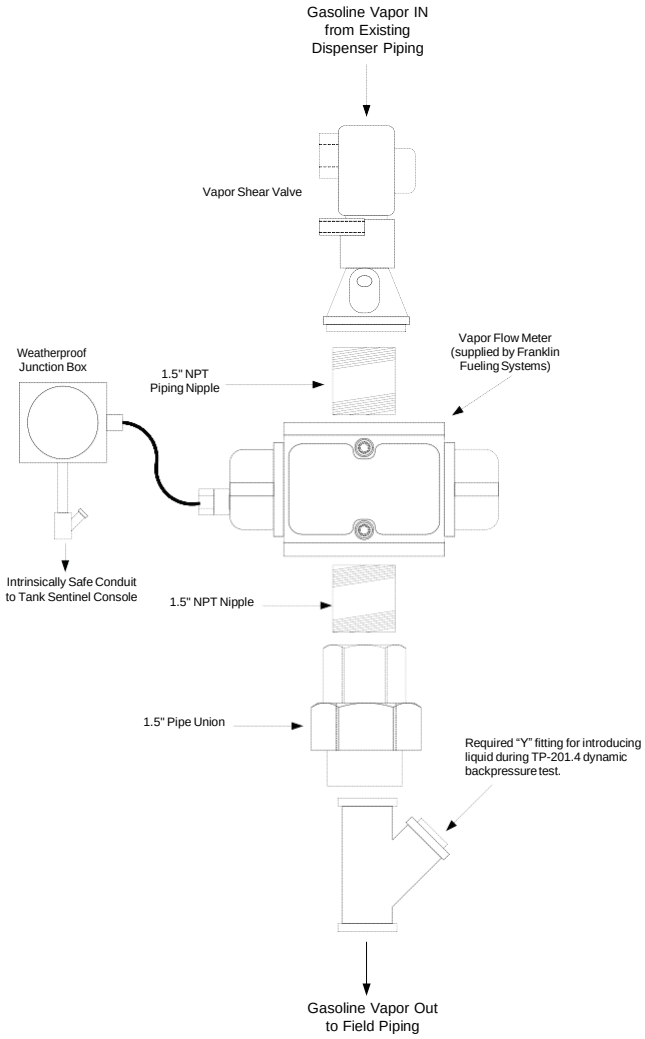

Figure 2
Flow Meter Below Shear Valve

FIGURE 2-ISD-INCON-6
Typical Installation of the INCON Vapor Pressure Sensor

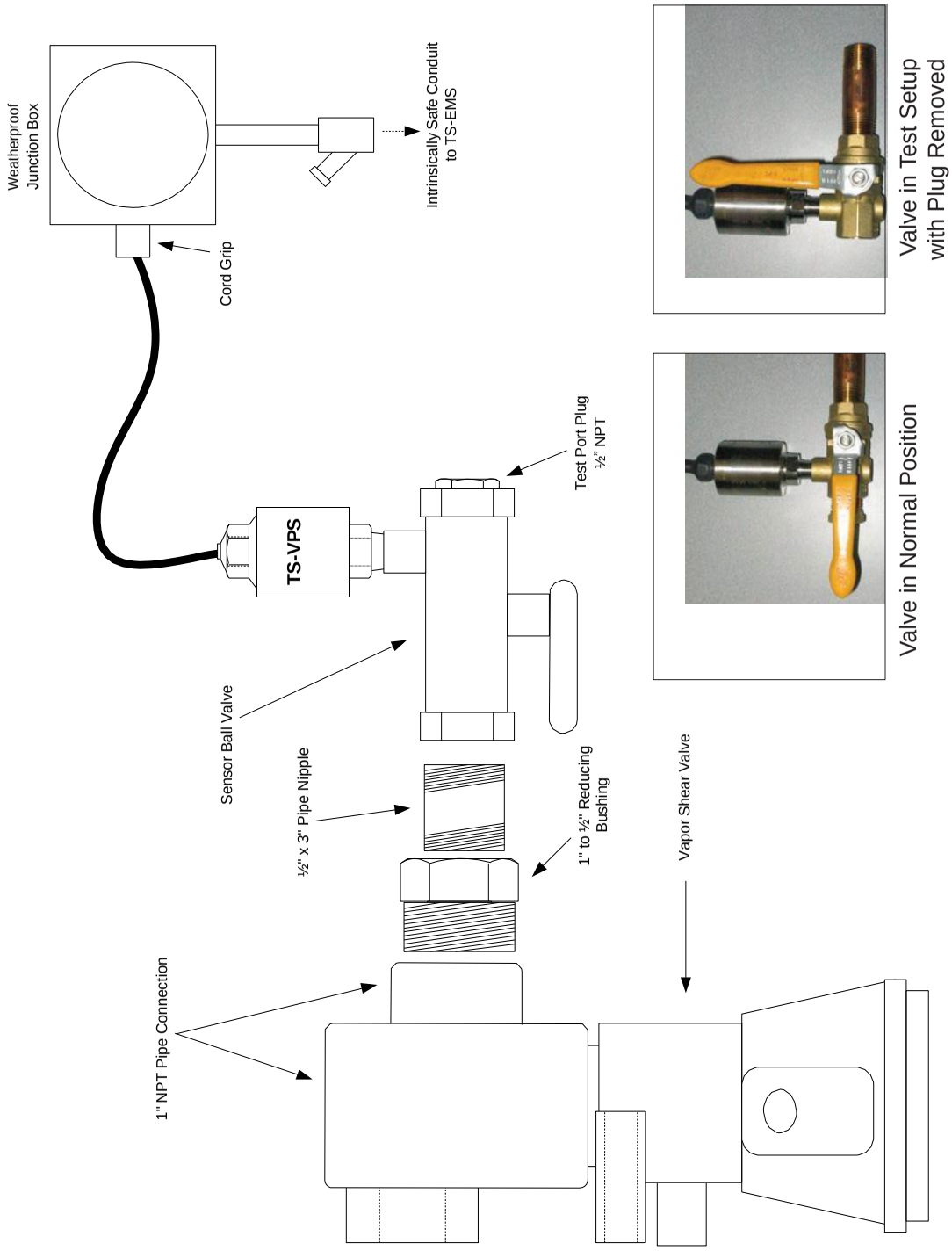

FIGURE 2-ISD-INCON-7
Data transfer Unit

Executive Order VR-202-R
Assist Phase II EVR System
Including In-Station Diagnostic (ISD) Systems

Exhibit 3
MANUFACTURING PERFORMANCE STANDARDS AND SPECIFICATIONS

SECTION I
Manufacturing Performance Standards and Specifications

The Assist Phase II EVR System Including In-Station Diagnostic (ISD) Systems and all components shall be manufactured in compliance with the performance standards and specifications in CP-201 (amended January 9, 2013), as well as the requirements specified in this Executive Order. All components (Exhibit 1) shall be manufactured as certified; no change to the equipment, parts, design, materials or manufacturing process shall be made unless approved in writing by the Executive Officer or Executive Officer delegate. Unless specified in Exhibit 2 or in the ***ARB Approved Installation, Operation and Maintenance Manual***, the requirements of this section apply to the manufacturing process and are not appropriate for determining the compliance status of a gasoline dispensing facility.

1. NOZZLES

Every nozzle shall be tested at the factory. Every nozzle shall have affixed to it a card or label stating the performance specifications listed below, and a statement that the nozzle was tested to, and met, the following specifications.

a. The nozzle vapor valve leak rate shall not exceed 0.038 cubic feet per hour (CFH) at a pressure of +2 inches H_2O when tested in accordance with the latest version of TP-201.2B.

b. The nozzle vapor valve leak rate shall not exceed 0.10 CFH at a vacuum of -100 inches H_2O when tested in accordance with the latest version of TP-201.2B.

c. The nozzle automatic shut off feature is tested at all service clip settings (either two or three) as well as handheld in accordance with Underwriters Laboratories (UL) Standard 842.

d. The nozzle is tested in accordance with the California Department of Food and Agriculture Division of Measurement Standards Article 2 (DMS 6-6-97).

e. The nozzle is manufactured to specifications that passed the following tests during the ARB certification evaluation:

TP-201.2C - Spillage from Phase II Systems

TP-201.2D - Post Fueling Drips From Nozzles

TP-201.2E - Gasoline Liquid Retention in Nozzles and Hoses

f. The nozzle is manufactured to meet the Vapor to Liquid Ratio as specified in Exhibit 2.

g. The terminal end of each nozzle shall be manufactured in accordance with the specifications referenced in Section 4.7.3 of CP-201.

2. INVERTED COAXIAL HOSES

Every inverted coaxial hose is tested for continuity and pressure tests in accordance with UL Standard 330.

3. HOSE ADAPTORS

Every hose adaptor is tested for continuity and pressure tests in accordance with UL Standard 567.

4. RECONNECTABLE BREAKAWAY COUPLINGS

Every reconnectable breakaway coupling is tested for continuity and pressure tests in accordance with UL Standard 567.

5. FLOW LIMITER

Every flow limiter is tested to 50 pounds per square inch (psi) liquid pressure to verify maximum gasoline flow rate limited to 10.0 gpm.

6. VP1000 VACUUM PUMPS

a. Every vacuum pump is pressure tested in accordance with UL Standard 79.

b. Every vacuum pump is manufactured to the exact specifications that passed all tests conducted during the ARB certification.

c. Every MC100 control module is tested in the factory to verify proper operation.

7. TANK PRESSURE MANAGEMENT SYSTEM

a. The Clean Air Separator tank is designed, constructed, tested, inspected and stamped per the American Society of Mechanical Engineers (ASME) Code Section VIII, Division 1, 2001 Edition, 2003 Addendum.

b. Every Clean Air Separator bladder is performance and pressure tested using the **Clean Air Separator Performance Test** to ensure its integrity.

SECTION II
In-Station Diagnostics (ISD) Systems

Option 1 - Veeder-Root ISD
Manufacturing Performance Standards and Specifications

The Veeder-Root ISD System and all components shall be manufactured in compliance with the performance standards and specifications in CP-201 (amended January 9, 2013), as well as the requirements specified in this Executive Order. All components (Exhibit 1) shall be manufactured as certified; no change to the equipment, parts, design, materials or manufacturing process shall be made unless approved in writing by the Executive Officer or Executive Officer delegate. Unless specified in Exhibit 2 or in the ***ARB Approved Installation, Operation and Maintenance Manual***, the requirements of this section apply to the manufacturing process and are not appropriate for determining the compliance status of a gasoline dispensing facility.

1. TLS CONSOLE

a. Every Veeder-Root TLS Console equipped with MAG Series Tank Inventory Probe Sensor is built, tested and manufactured as an Automatic Tank Gauge System. The TLS Console has been third-party tested by Midwest Research Institute as a UST fuel leak detection system meeting Volumetric Tank Tightness Testing Method standards.

b. Every Veeder-Root TLS Console has been designed and manufactured to have an Operating Temperature Range of 32°F to 113°F (0°C to 45°C) and Storage Temperature Range of –40°F to 165°F (-40°C to 74°C).

c. Every Veeder-Root TLS Console system including software, sensors and modules have been designed and is Underwriters Laboratories (UL), Canadian Standards Association (CSA), and Canadian Underwriters Laboratories (cUL) approved for operation near potentially hazardous fuel storage tanks.

d. Every TLS Console system including software, sensors and modules have been designed and tested in accordance with ISO-9001 manufacturing quality standards.

2. ISD SOFTWARE

a. Every Veeder-Root TLS Console with ISD software is manufactured to the specifications that passed the operational test and is compliant with

CP-201 ISD performance standards and specifications.

b. Every Veeder-Root TLS Console with ISD software has been designed, manufactured and tested to continually monitor the connectivity and operability status of all ISD sensors and modules. All TLS Console ISD software has been designed, manufactured and tested to issue a visual, audible as well as printed notification upon failure of the connectivity or operability status of ISD sensors and modules.

3. VAPOR FLOW METER

Every Veeder-Root ISD Vapor Flow Meter is designed, tested and manufactured to interface to the TLS Console system. The ISD Vapor Flow Meter has been designed and tested for measuring flow between 1 - 30 GPM in HC concentrations between 0 – 100% saturation across a –40°F to 150°F (-40°C to 65°C) operating range.

4. VAPOR PRESSURE SENSOR

Every Veeder-Root ISD Vapor Pressure Sensor is designed, tested and manufactured to interface to the TLS Console system. The ISD Vapor Pressure Sensor has been designed and tested for measuring vapor pressure between –5 to +5 IWC in HC concentrations between 0 – 100% saturation across a –40°F to 150°F (-40°C to 65°C) operating range.

5. TANK INVENTORY PROBE SENSOR

Every Veeder-Root MAG Series Tank Inventory Probe Sensor is designed, tested and manufactured to interface to the TLS Console System. The MAG Series Tank Inventory Probe Sensor has been designed and tested to have an Operating Temperature Range of -40°F to 140°F (-40°C to 60°C) and Storage Temperature Range of –40°F to 165°F (-40°C to 74°C).

6. TLS CONSOLE MODULES (Including optional Maintenance Tracker)

Every Veeder-Root TLS Console system module has been designed and tested to interface to the TLS Console System. The TLS Console system modules have been designed, tested and manufactured to have an Operating Temperature Range of 32°F to 113°F (0°C to 45°C) and Storage Temperature Range of –40°F to 165°F (-40°C to 74°C).

7. VEEDER-ROOT RF WIRELESS COMPONENTS

a. Wireless communication is tested between transmitter and receiver.

b. Communication is tested between receiver and RF box over communication wire.

c. Communication is tested between transmitter and sensor over communication wire.

d. Transmitter and receiver board addressing capability is verified.

e. Battery voltage is checked to conform to requirements.

Option 2 - INCON Vapor Recovery Monitoring (VRM)
Manufacturing Performance Standards and Specifications

The INCON VRM System and all components shall be manufactured in compliance with the performance standards and specifications in CP-201 (amended January 9, 2013), as well as the requirements specified in this Executive Order. All components (Exhibit 1) shall be manufactured as certified; no change to the equipment, parts, design, materials or manufacturing process shall be made unless approved in writing by the Executive Officer or Executive Officer delegate. Unless specified in Exhibit 2 or in the ***ARB Approved Installation, Operation and Maintenance Manual***, the requirements of this section apply to the manufacturing process and are not appropriate for determining the compliance status of a gasoline dispensing facility.

1. CONSOLE

a. Every INCON Console has been designed and manufactured to have an Operating Temperature Range of 32°F to 104°F (0°C to 40°C) and Storage Temperature Range of -4°F to 140°F (-20°C to 60°C).

b. Every INCON Console system including software, sensors and modules have been designed and is Underwriters Laboratories (UL) approved for operation near potentially hazardous fuel storage tanks.

c. Every INCON Console system including software, sensors and modules have been designed and tested in accordance with ISO-9001 manufacturing quality standards.

2. VRM SOFTWARE[1]

a. Every INCON Console with VRM software is manufactured to the specifications that passed the operational test and is compliant with CP-201 ISD performance standards and specifications.

b. Every INCON Console with VRM software has been designed, manufactured and tested to continually monitor the connectivity and operability status of all sensors and modules. All Console VRM software has been designed, manufactured and tested to issue a visual, audible as well as printed notification upon failure of the connectivity or operability status of sensors and modules.

3. VAPOR FLOW METER

Every INCON Vapor Flow Meter is designed, tested and manufactured to interface to the INCON Console. The Vapor Flow Meter has been designed and tested for measuring flow between 1 - 100 GPM in HC concentrations between 0 – 100% saturation across a -40°F to 140°F (-40°C to 60°C) operating range.

[1]INCON/TS-VRM software Versions 1.0.0 and1.1.0 are approved for and shall be used or installed only with uni-hose dispensers.

4. VAPOR PRESSURE SENSOR

Every INCON Vapor Pressure Sensor is designed, tested and manufactured to interface to the INCON Console. The Vapor Pressure Sensor has been designed and tested for measuring vapor pressure between -8 to +8 IWC in HC concentrations between 0 – 100% saturation across a -40°F to 140°F (40°C to 60°C) operating range.

5. CONSOLE MODULES

Every Console system module has been designed and tested to interface to the INCON Console. The Console system modules have been designed, tested and manufactured to have an Operating Temperature Range of 32°F to 104°F (0°C to 40°C) and Storage Temperature Range of -4°F to 140°F (-20°C to 60°C).

6. DATA TRANSFER UNIT

Every INCON Data Transfer Unit is designed and tested to interface to the INCON Console and to each other. The Data Transfer Unit has been designed and tested to transmit data signals over a 120 VAC power line across a -20°F to 140°F (-28.9°C to 60°C) operating range.

Exhibit 4
DETERMINATION OF STATIC PRESSURE PERFORMANCE OF THE CLEAN AIR SEPARATOR

1 APPLICABILITY

Definitions common to all certification and test procedures are in:

D-200 Definitions for Vapor Recovery Procedures

For the purpose of this procedure, the term “ARB” refers to the California Air Resources Board, and the term “Executive Officer” refers to the Executive Officer of the ARB or his or her authorized representative or designate.

1.1 This test procedure is used to quantify the vapor tightness of the Healy Clean Air Separator (CAS) pressure management system installed as part of a gasoline dispensing facility (GDF) under either Executive Order VR-201-R or VR-202-R.

2 PRINCIPLE AND SUMMARY OF TEST PROCEDURE

2.1 The Clean Air Separator, while isolated from the vapor recovery system, is evaluated for vapor integrity using a vacuum decay procedure. The vacuum decay after 5 minutes is compared with an allowable value. The allowable value is based upon the initial vacuum level when conducting the test using the table provided in this test procedure.

2.2 A positive pressure decay procedure is included that conducts the same evaluation as the vacuum decay but with positive pressure. This test is conducted if there is insufficient vacuum (not greater than – 2.00” wc) to conduct the vacuum decay. Districts have the authority to specify in the permit conditions that this positive pressure test is to be conducted even if the vacuum test has been conducted.

3 RANGE

3.1 The full-scale range of the electronic measuring device shall not exceed 0-20.00” wc with a minimum accuracy of not less than 0.25 percent of full-scale.

4 INTERFERENCES

4.1 Leaks in the piping for the Clean Air Separator could bias the test results toward non-compliance.

4.2 Introduction of gaseous nitrogen into the system at flow rates exceeding 4 CFM (240 CFH) may bias the results of the test toward non-compliance. Only gaseous nitrogen shall be used to conduct this test.

4.3 Pressurizing the Clean Air Separator bladder greater than 14.00” wc could damage the bladder, biasing the test toward non-compliance.

4.4 Thermal Bias for Electronic Manometers

Electronic manometers shall have a warm-up period of at least 15 minutes followed by a drift check of 5 minutes. If the drift exceeds 0.01” wc, the instrument should not be used.

5 APPARATUS

5.1 Nitrogen

Use commercial grade gaseous nitrogen in a high pressure cylinder, equipped with a two-stage pressure regulator.

5.2 Pressure Measurement Device

Use an electronic pressure measurement device to monitor the pressure decay in the Clean Air Separator. The pressure measurement device shall, at a minimum, be readable to the nearest 0.01” wc.

5.3 Test Port Assembly

Use a test port assembly constructed similar to the one in Figure 4-1. The assembly should have an 8 oz. Pressure Relief valve, to ensure that the Clean Air Separator is not over pressurized. The Model 9968 Clean Air Separator Test Port Assembly can be purchased from Healy Systems, Inc.

FIGURE 4-1
Clean Air Separator Test Port Assembly

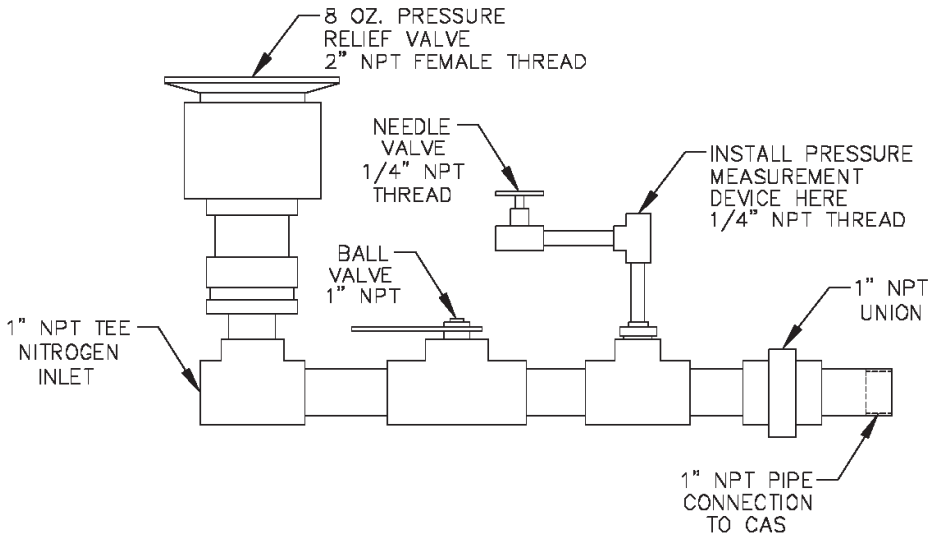

5.4 Stopwatch

Use a stopwatch accurate to within 0.2 seconds.

5.5 Flow Meter

Use a flow meter to determine the required pressure setting of the delivery pressure gauge on the nitrogen supply pressure regulator. This pressure shall be set such that the nitrogen flow rate is between 2.0 CFM (120 CFH) and 4.0 CFM (240 CFH).

5.6 Leak Detection Solution

Any liquid solution designed to detect vapor leaks may be used to verify the pressure integrity of the test equipment prior to conducting the test.

5.7 Condensate Collection Vessel

A container approved for use with gasoline that can hold at least a half gallon of material.

5.8 Graduated Cylinder

A graduated cylinder suitable for use with gasoline capable of measuring to the nearest ounce or mL.

6 PRE-TEST PROCEDURES

6.1 The following safety precautions shall be followed:

6.1.1 Only gaseous nitrogen shall be used to pressurize the system.

6.1.2 An 8 oz. pressure relieve valve shall be installed on the Test Port Assembly to prevent the possible over-pressurizing of the Clean Air Separator.

6.1.3 A ground strap should be employed during the introduction of nitrogen into the system.

6.2 There shall be no Phase I bulk product deliveries into or out of the gasoline storage tank(s) within the three (3) hours prior to the test or during the performance of this test procedure.

6.3 All pressure measuring device(s) shall be bench calibrated using a reference standard. Calibration shall be performed at 20, 50, and 80 percent of full scale. Accuracy shall be within two percent at each of these calibration points. Calibrations shall be conducted on a frequency not to exceed 180 days. Calibration documentation shall be maintained with the equipment at all times.

6.4 Use the flow meter to determine the nitrogen regulator delivery pressures that correspond to nitrogen flow rates of 2.0 CFM (120 CFH) and 4.0 CFM (240 CFH). These pressures define the allowable range of delivery pressures acceptable for this test procedure. The flow meter shall be connected in-line between the nitrogen supply regulator and the Test Port Assembly during pressurization. The flow meter may be connected in-line between the nitrogen supply regulator and the Test Port Assembly during the test.

6.5 The electronic pressure measurement device shall be subject to warm-up and drift check before use; see Section 4.5.

6.6 The four ball valves used in the installation of the Clean Air Separator are lockable and shall be locked in the position shown in Figure 2-2 or Figure 2-2H of Exhibit 2 and in Figure 4-1 or Figure 4-1H of this Exhibit during normal operation. Figure 4-1 and Figure 4-2 apply to vertical Clean Air Separator installations and Figure 4-1H and Figure 4-2H apply to horizontal Clean Air Separator installations. The four padlocks provided by Healy Systems, Inc. in their installation kit are keyed the same. However, it is possible that one or more of the padlocks on the Clean Air Separator could have been replaced (seizing, damage, broken key, etc.). Conducting this test will require a set of keys necessary to unlock all padlocks.

6.7 Verify that the Clean Air Separator is in its normal operating configuration by confirming that all components are as indicated (See Figure 4-1 or Figure 4-1H):

Valve “A” - Open
Valve “B, C and D” - Closed
Pipe End “E” - Plugged
Tee Branch “F” - Plugged

FIGURE 4-1
Normal Clean Air Separator Operating Configuration

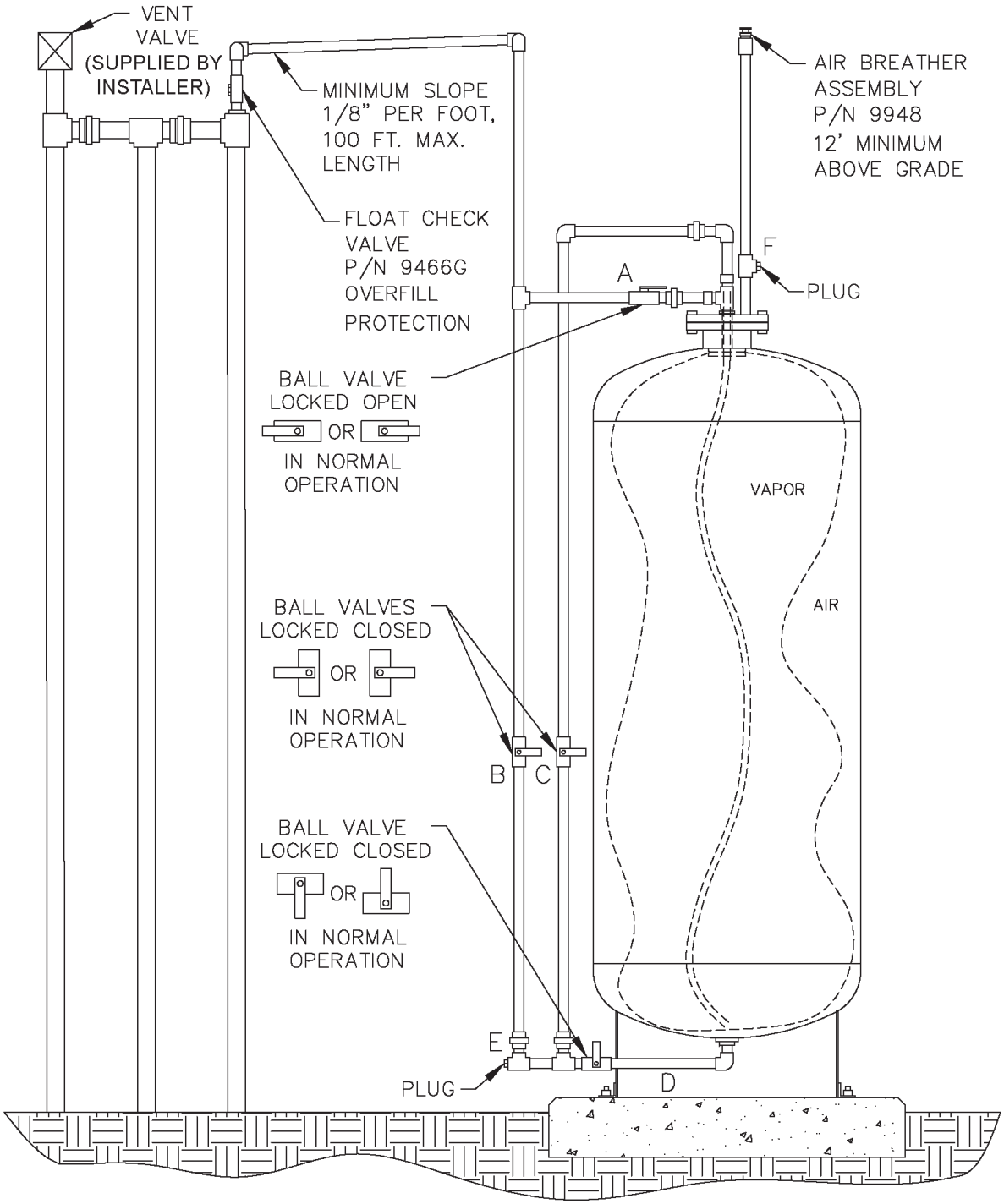

FIGURE 4-1H
Normal Clean Air Separator Operating Configuration

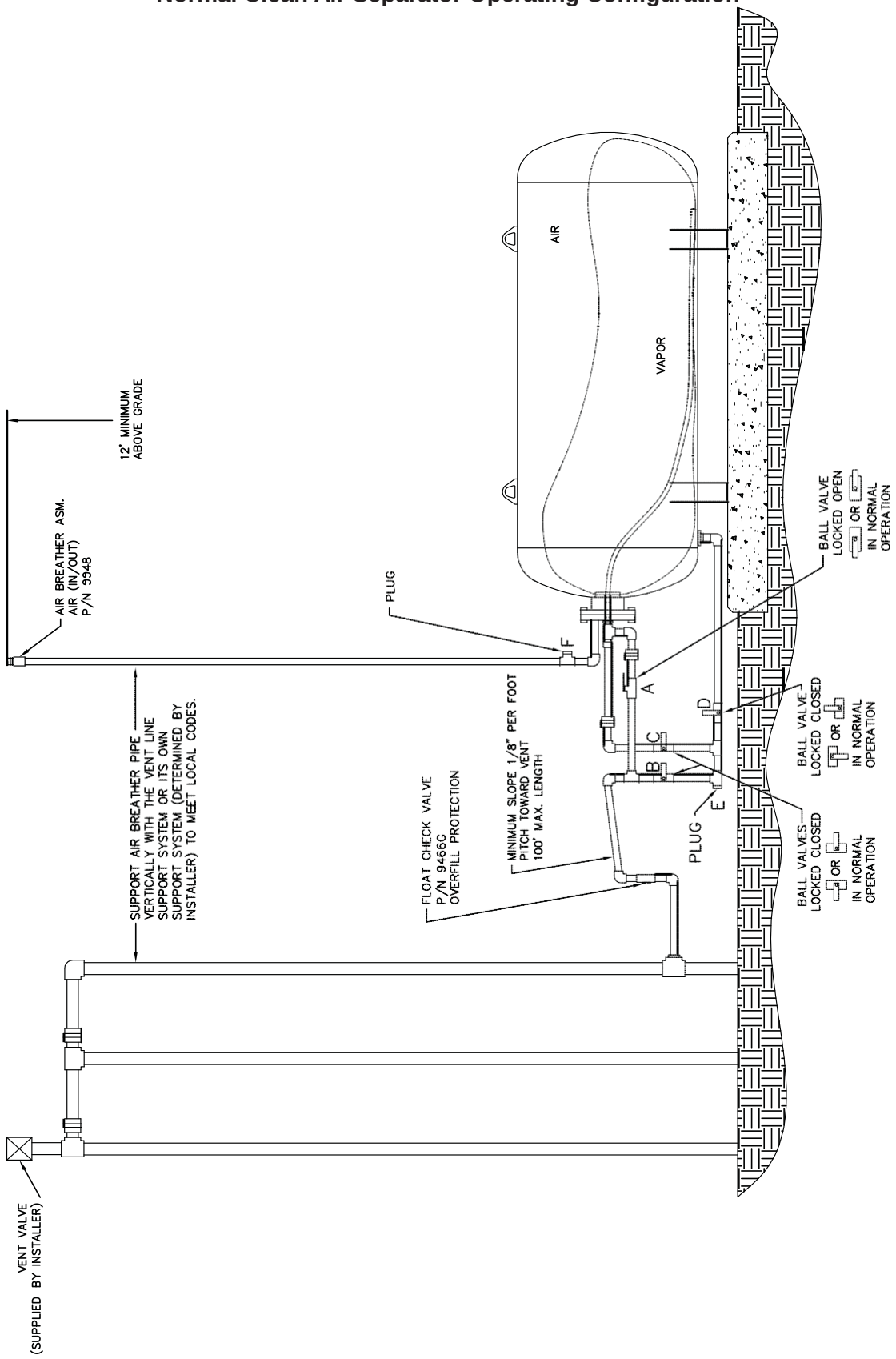

6.8 Installing the Test Port Assembly

6.8.1 Open the ball valve marked “B”, shown in Figure 4-1 or Figure 4-1H. This ensures that if there is any condensate in the primary connection line to the Clean Air Separator it will drop down into the lower section of the piping configuration, so that it can be measured. Close the valve after approximately 30 seconds.

6.8.2 Position the condensate collection vessel below plug “E” prior to removing it. Remove the 1” plugs from locations “E” and “F” from Figure 4-1 or Figure 4-1H. Transfer the collected condensate into the graduated cylinder. If there is more than 16 oz. (473 mL) of liquid condensate, the bladder and vapor processor vessel must be drained. Conduct the bladder and vessel draining procedures from the Clean Air Separator section of the ***ARB Approved Installation, Operation and Maintenance Manual***.

Note: Depending upon the size of the graduated cylinder and the amount of condensate, it may take multiple transfers from the condensate collection vessel to get the total condensate measurement.

6.8.3 Install the Test Port Assembly to the Clean Air Separator at location “E”. See Figure 4-2 or Figure 4-2H. Figure 4-2 applies to vertical Clean Air Separator installations and Figure 4-2H applies to horizontal Clean Air Separator installations.

6.8.4 Connect the gaseous nitrogen supply to the Test Port Assembly. See Figure 4-2 or Figure 4-2H.

6.8.5 Check the test equipment and piping isolated from normal Clean Air Separator operation by the ball valves “B, C and D” by pressurizing with nitrogen to a pressure of 4” wc ± 1” wc and closing the ball valve on the Test Port Assembly. Use leak detection solution. Tighten as necessary. The test equipment shall have no leaks.

6.8.6 Open the needle valve on the Test Port Assembly to bleed the pressure off the equipment. Keep ball valve on Test Port Assembly closed.

FIGURE 4-2
Clean Air Separator in Configuration to Conduct Test

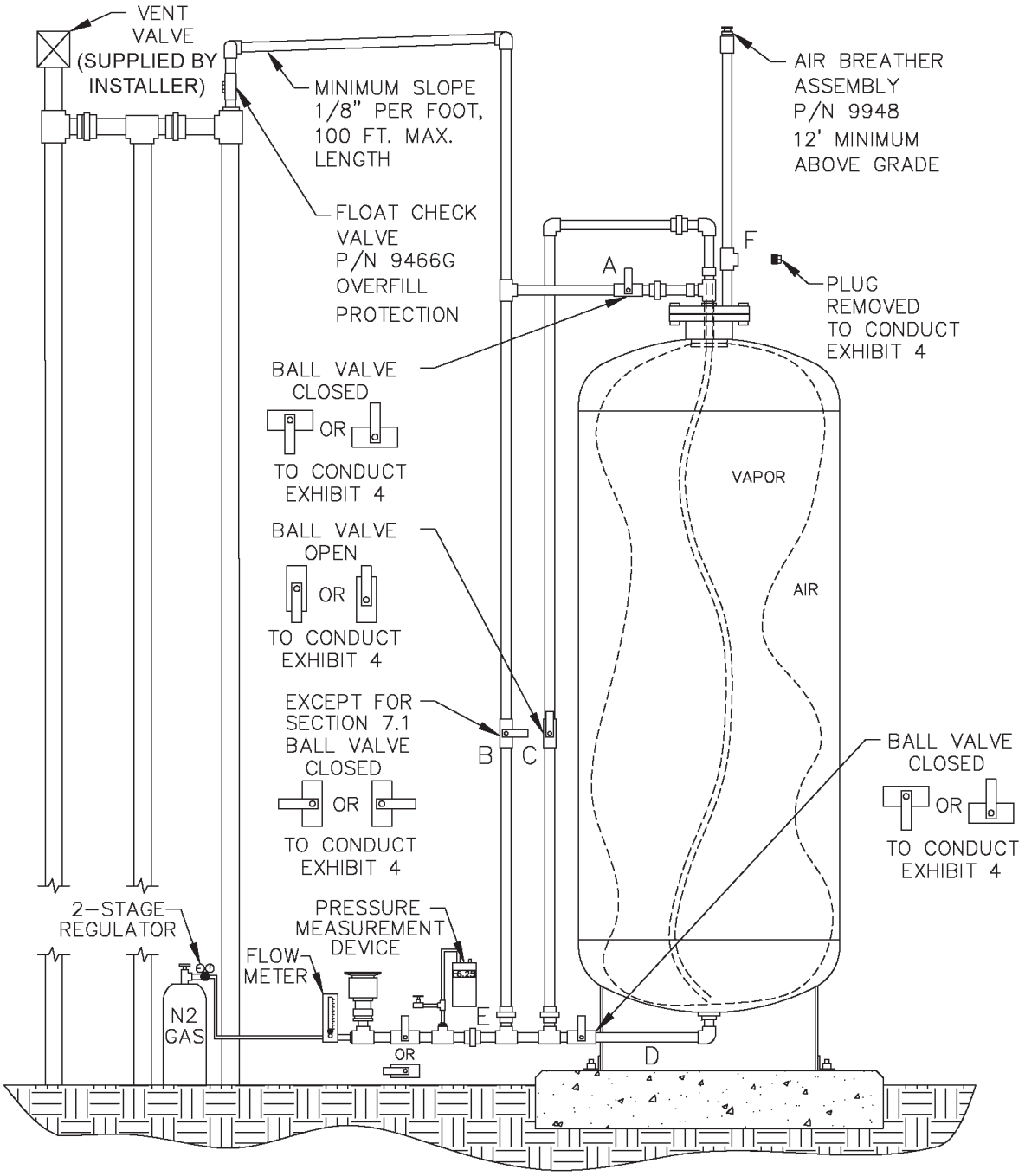

FIGURE 4-2H
Clean Air Separator in Configuration to Conduct Test

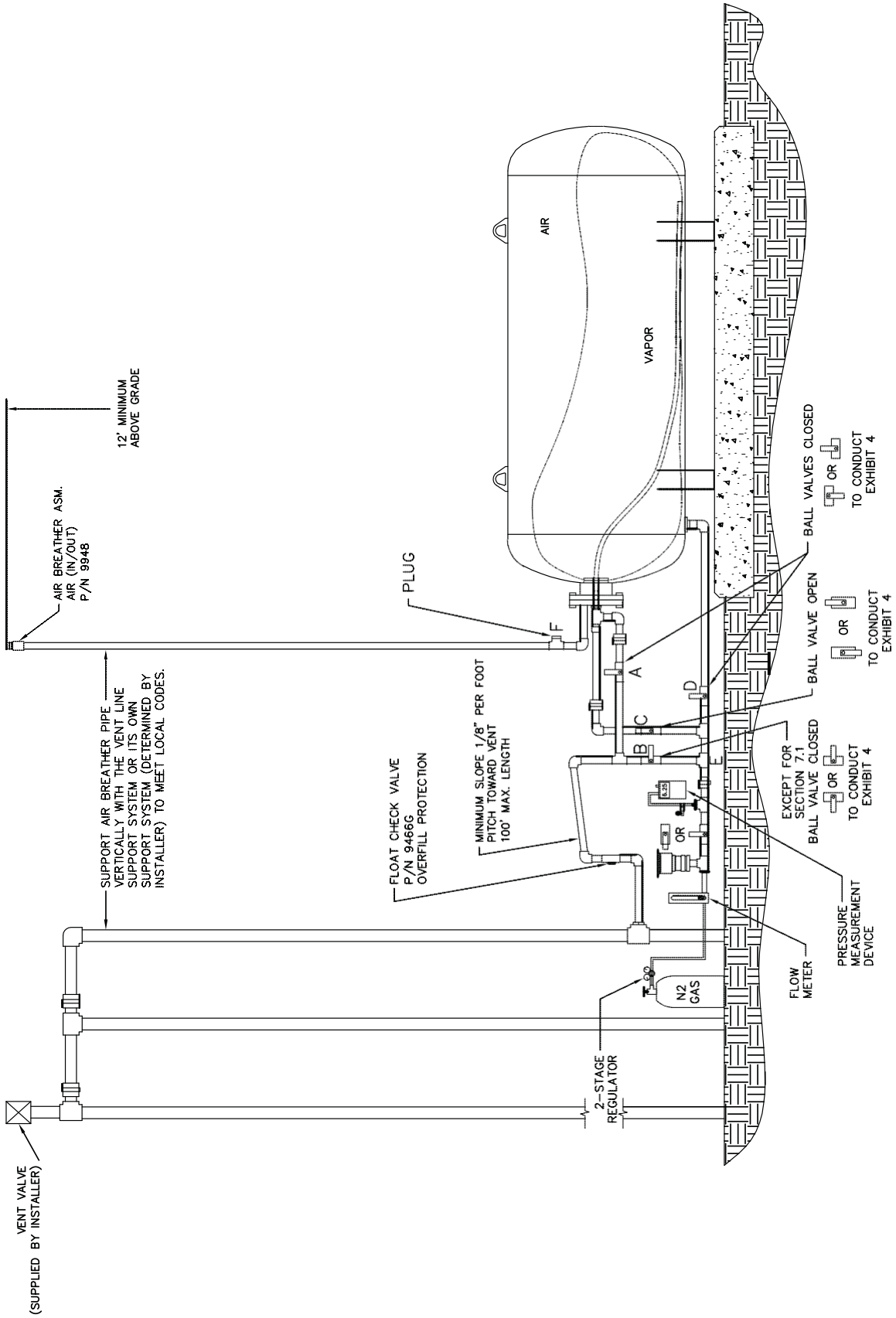

7 TESTING

7.1 Open the ball valve marked “B” from Figure 4-2 or Figure 4-2H. The pressure measurement device installed on the Test Port Assembly should now be reading UST and Clean Air Separator ullage pressure (or vacuum).

7.2 If the station vacuum is greater than (more negative) than -2.00” wc, then proceed to Section 7.2.1. If less than –2.00” wc, then proceed to Section 7.3:

7.2.1 Close the ball valves marked “A” and “B” from Figure 4-2.

7.2.2 Open the ball valve marked “C” from Figure 2 and wait one minute.

7.2.3 If necessary, use the needle valve on the Test Port Assembly to bleed air into the bladder until the vacuum level reaches as close to a whole number on the pressure measurement device as the accuracy of the device will provide (ie. -2.00, -3.00, -4.00, -5.00, -6.00, -7.00, -8.00). Make sure the needle valve is closed. Record this vacuum and start the stop watch to begin a 5 minute decay.

7.2.4 Record the vacuum at one-minute increments up to 5 minutes.

7.2.5 Using the information from Table 1, verify that the vacuum after 5 minutes is equal to or greater than the allowable minimum for the initial vacuum recorded from Section 7.2.3.

7.2.6 If the vacuum is greater than the allowable minimum, the Clean Air Separator passed the test.

7.2.7 If the vacuum is less than the allowable minimum, the Clean Air Separator failed the test.

TABLE 1
Allowable 5 Minute Vacuum Decay for Clean Air Separator

Vacuum at Start of Test (inches wc)	Allowable Minimum Vacuum after 5 min. (inches wc)
8.0	5.5
7.0	4.7
6.0	3.8
5.0	3.0
4.0	2.2
3.0	1.5
2.0	0.8

7.3 If the station vacuum is less than –2.00” wc (from Section 7.2), or at the direction of district (refer to Section 2.2), conduct the following:

7.3.1 Close the ball valves marked “A” and “B” from Figure 4-2.

7.3.2 Open the ball valve marked “C” from Figure 4-2.

7.3.3 Open the ball valve of the Test Port Assembly and flow nitrogen into the Clean Air Separator bladder at a flow rate between 2 and 4 CFM until the pressure in the bladder reaches 2.20” wc.

7.3.3.1 Depending upon the nitrogen flow rate used, the bladder could take up to 30 minutes to fill completely.

7.3.3.2 Because of the close proximity of the pressure measurement device to the nitrogen inlet of the Test Port Assembly, the pressure measurement device may read a higher pressure when nitrogen is flowing. The pressure measurement device is usually steady, but will start to increase rapidly when the bladder is getting full.

7.3.3.3 Periodically stopping nitrogen flow will provide an accurate reading of the pressure in the bladder.

7.3.4 Once the pressure reaches 2.20” wc, shut off the flow of nitrogen to the Clean Air Separator bladder and close the ball valve of the Test Port Assembly.

7.3.5 Wait 5 minutes or until pressure stabilizes above 2.00” wc. If the pressure does not stabilize, repeat steps 7.3.3 and 7.3.4.

7.3.6 Use the needle valve on the Test Port Assembly to bleed off the nitrogen until the pressure reaches 2.00” wc. Make sure the needle valve is closed. Record the pressure.

7.3.7 Start the stop watch to begin a 5 minute decay.

7.3.8 Record the pressure in one-minute increments up to 5 minutes.

7.3.9 If the pressure in the bladder is greater than 1.77” wc at the end of 5 minutes, then the Clean Air Separator passed the test.

7.3.10 If the pressure in the bladder is less than 1.77” wc at the end of 5 minutes, then the Clean Air Separator failed the test.

7.4 If the bladder was evaluated using the vacuum procedure (Section 7.2), close the ball valve “C” to keep it in a vacuum condition. If the bladder was evaluated using the pressure procedure (Section 7.3), open the needle valve on the Test Port Assembly to bleed off all pressure from the bladder.

7.5 Close the ball valve marked “C”, if not already done.

7.6 Remove the Test Port Assembly from location “E” and install the 1” pipe plug. Use a pipe sealant approved for use with gasoline on the threads and tighten to 60 ft-lbs.

7.7 Install the 1” pipe plug to location “F”. Use a pipe sealant approved for use with gasoline on the threads and tighten to 60 ft-lbs.

7.8 Open the ball valve marked “A”. Lock all ball valves using the padlocks.

7.9 The Clean Air Separator should now be in normal operation configuration. Verify this by using the outline from Section 6.7 and Figure 4-1 or Figure 4-1H.

8 REPORTING

8.1 Record test data on the form shown in Figure 4-3. Districts may require the use of an alternate form, provided that the alternate form includes the same minimum parameters as in Figure 4-3.

FIGURE 4-3

Data Form for Determination of Static Pressure Performance of the Healy Clean Air Separator for Executive Orders VR-201-R and VR-202-R

SOURCE INFORMATION

GDF Name and address: _____

GDF Representative and title: _____

GDF Phone No. _____

Date and Time of Last Fuel Drop to GDF: _____

P/O #: _____

A/C#: _____

Date of Last Calibration of Pressure Measurement Device: _____

District Test Witness: _____

VACUUM TEST (Section 7.1 through 7.2.7)

Vacuum at start of test, inches water column (7.2.3)	_____
Vacuum at one minute, inches water column	_____
Vacuum at two minutes, inches water column	_____
Vacuum at three minutes, inches water column	_____
Vacuum at four minutes, inches water column	_____
Final vacuum at five minutes, inches water column	_____
Allowable minimum vacuum, inches water column (from Table 1)	_____

POSITIVE PRESSURE TEST (Section 7.3 through 7.3.9)

Pressure at start of test, inches water column (7.3.6)	_____
Pressure at one minute, inches water column	_____
Pressure at two minutes, inches water column	_____
Pressure at three minutes, inches water column	_____
Pressure at four minutes, inches water column	_____
Final pressure at five minutes, inches water column	_____
Allowable final pressure, inches water column (7.3.9)	1.77

Certified Technician Name	Test Company	Date Test Conducted
_____ Certification Number: _____ Expiration Date: _____		

Exhibit 5
VAPOR TO LIQUID VOLUME RATIO
(Healy Model 900 EVR Nozzle)

Definitions common to all certification and test procedures are in:

D-200 Definitions for Vapor Recovery Procedures

For the purpose of this procedure, the term “ARB” refers to the California Air Resources Board, and the term “Executive Officer” refers to the ARB Executive Officer, or his or her authorized representative or designate.

1. PURPOSE AND APPLICABILITY

1.1 This test procedure is used to quantify the Vapor to Liquid (V/L) Volumetric Ratio of the Healy Model 900 EVR Nozzle installed at gasoline dispensing facilities (GDF). This procedure provides a method to determine compliance with the V/L requirements specified in ARB Executive Orders (EO) VR-201 and VR-202.

2. PRINCIPLE AND SUMMARY OF TEST PROCEDURE

2.1 A tight fitting adaptor is placed on the spout of a dispensing nozzle. The adaptor, which isolates vapor flow to the nozzle vapor collection ports, is connected to a volume gas meter. Gasoline is dispensed through the nozzle and the volume of vapors drawn through the vapor collection boot by the Phase II system vacuum pump is measured. The volume of vapor is recorded and compared with the volume of gasoline dispensed to determine the V/L Volumetric Ratio.

2.2 The test is conducted with the pressure/vacuum (P/V) vent valve(s) installed on the storage tank vent pipes.

2.3 The test procedure requires no modifications to the GDF being evaluated.

2.4 The test procedure may be conducted on a fueling point on one side of the dispenser with the other side of the dispenser either authorized to dispense fuel (but not dispensing), or with the other side dispensing fuel into a vehicle or another portable test tank. Conducting the test this way will be evaluating the V/L of the fueling point with the VP1000 vacuum pump running on its high speed setting.

3. BIASES AND INTERFERENCES

3.1 Nozzle spouts that are damaged such that the V/L adaptor cannot fit over the nozzle spout preclude the use of this test.

3.2 Refueling points not capable of achieving dispensing rates (see Equation 9-2) required for conducting the V/L test, as specified in Exhibit 2 of ARB Executive Orders VR-201-P and VR-202-P, preclude the use of this test for determining in-use compliance of certified systems.

3.3 Bagging, or otherwise sealing any nozzle associated with the vacuum pump serving the nozzle being tested, may bias the test results towards compliance. **The V/L test to verify compliance shall be conducted without "bagging" any of the nozzles served by a common vacuum device.**

3.4 If the nozzle being tested introduces liquid into the V/L adaptor, gas volume meter or the adaptor supply hose, the V/L of that nozzle shall be deemed a failure of the V/L standard.

3.5 Do not drain or remove liquid in either the vapor passage of the hoses or the dispenser vapor piping prior to performing the test. Draining of this liquid gasoline will bias the test toward compliance.

3.6 The O-ring in the V/L adaptor that is not properly lubricated may bias the results toward noncompliance. See Section 5.7 for lubrication requirements. Motor oil (any weight) is acceptable for lubricating the O-ring. Contact Healy Technical Services with any questions about other lubricants that may be used in conducting this test.

3.7 Conducting V/L testing with an improperly conditioned portable test tank (not saturated with gasoline vapors) will bias the test results of the as found V/L of the fueling point. Refer to Section 6.6 for proper portable test tank conditioning.

4. SENSITIVITY, RANGE, AND ACCURACY

4.1 The maximum rated capacity of the gas volume meter shall be at least 800 CFH and not greater than 3,000 CFH.

4.2 The minimum rated capacity of the gas volume meter shall be 25 CFH.

4.3 The minimum readability of the gas volume meter shall be 0.01 cubic feet.

4.4 Accuracy, determined during calibration, will be ± 5 percent of the gas volume meter reading.

5. EQUIPMENT

5.1 Vapor to Liquid Adaptor and Surrogate Spout

A **Vapor to Liquid Adaptor**. Only the Healy Systems, Inc. V/L Test Sleeve (Figures 5-1, 5-4 and 5-5), Part No. 8034-1, can be used to conduct V/L testing on the Assist Phase II EVR System (Executive Order VR-201 series or Executive Order VR-202 series). The nominal inside diameter of the flexible tubing shall be between 0.75 and 1.00 inches, and the length of the tubing shall be between 3.0 and 6.0 feet.

B **Surrogate Spout**. Only the Healy Systems, Inc. V/L Surrogate Spout (Figures 5-1 and 5-5), Part No. 8175, can be used to conduct the pre-test and post-test leak check.

5.2 Gas Volume Meter. Use a gas volume meter to measure the volumetric flow rate through the V/L adaptor. The meter shall be equipped as shown in Figure 5-2 and the maximum allowable pressure drop(s) (determined by the manufacturer) across the meter shall be:

For a meter with a maximum rated capacity of 1000 CFH through 3,000 CFH:
1.10 inches H_2O at a flowrate of 3,000 CFH
0.05 inches H_2O at a flowrate of 30 CFH

For a meter with a maximum rated capacity of 800 to 1,000 CFH:
0.70 inches H_2O at a flowrate of 800 CFH
0.04 inches H_2O at a flowrate of 16 CFH

See Section 6.2 for further gas volume meter specifications.

5.3 Volume Gas Meter Inlet Manifold. This manifold is designed to return the vapors displaced from the portable gasoline tank assembly, at atmospheric pressure, to the inlet of the gas volume meter. This manifold shall be two (2.0) inches minimum inside diameter pipe. The intake passage of the manifold shall be no shorter than 6.0 inches and no longer than 18.0 inches. See Figures 5-2 and 5-4.

FIGURE 5-1
Healy Vapor To Liquid (V/L) Adaptor and Surrogate Spout Assembly

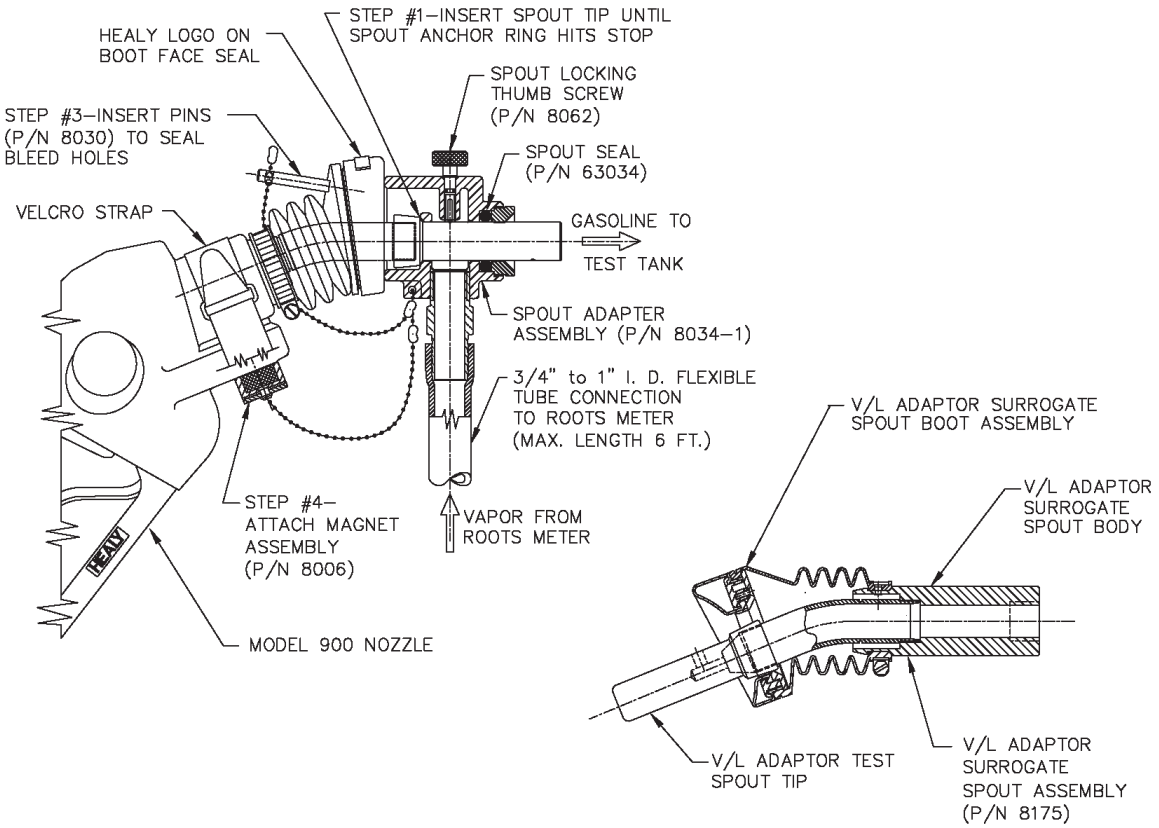

NOTE: The thumbscrew and Healy logo on top of the nozzle boot face seal must be in vertical alignment to imitate fueling an unleaded vehicle.

FIGURE 5-2
Gas Volume Meter and Vapor To Liquid Adaptor

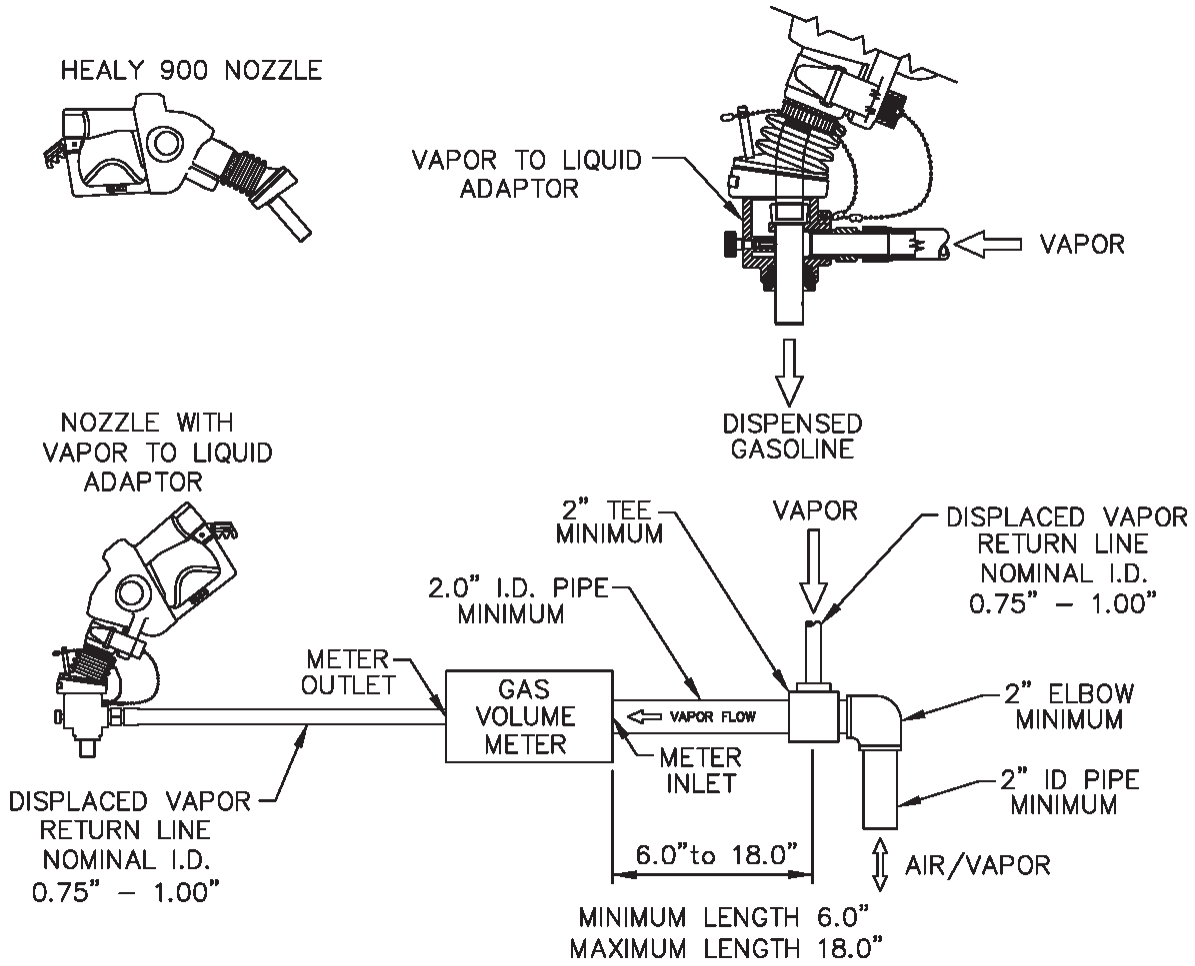

5.4 Liquid Volume Meter. Use the totalizer on the gasoline dispenser to measure the volume of gasoline dispensed during the test.

5.5 Portable Gasoline Tank Assembly. A portable tank, meeting fire safety requirements for use with gasoline, shall be used to receive the gasoline dispensed during this test. The tank shall have sufficient volume so that at least 4.5 gallons may be dispensed prior to activating the primary shutoff mechanism of the dispensing nozzle. Portable tanks shall have a permanent label or mark indicating the total fuel capacity in gallons. Tank material, likely to provide contact with the nozzle spout, or V/L adaptor, during the entire dispensing event, shall be constructed of aluminum or brass or other materials approved by the local fire codes for such application. The tank and required plumbing configuration is shown in Figure 5-3 and Figure 5-4. This configuration permits a portion of the vapors displaced during testing to be returned to the underground storage tank (UST). The minimum and maximum dimensions shown in Figure 5-2 and Figure 5-4 shall be adhered to in all cases.

5.6 Stopwatch. Use a stopwatch accurate to within 0.2 seconds.

5.7 Lubricant. Appropriate lubricant shall be used to ensure a leak-tight seal between the O-ring in the V/L adaptor and the nozzle spout. Motor oil (any weight) is acceptable for lubricating the O-ring. Contact Healy Technical Services with any questions about other lubricants that may be used in conducting this test.

5.8 Leak Detection Solution. Any liquid solution designed to detect gaseous leaks may be used to verify the pressure integrity of test equipment during this test.

5.9 Pressure Measuring Device. An electronic pressure measuring device with a full scale range that shall not exceed 0-10 inches WC with a minimum accuracy of 0.5 percent of full scale. A 0-20 inches WC device may be used provided the minimum accuracy is 0.25 percent of full-scale.

FIGURE 5-3
Portable Tank Assembly

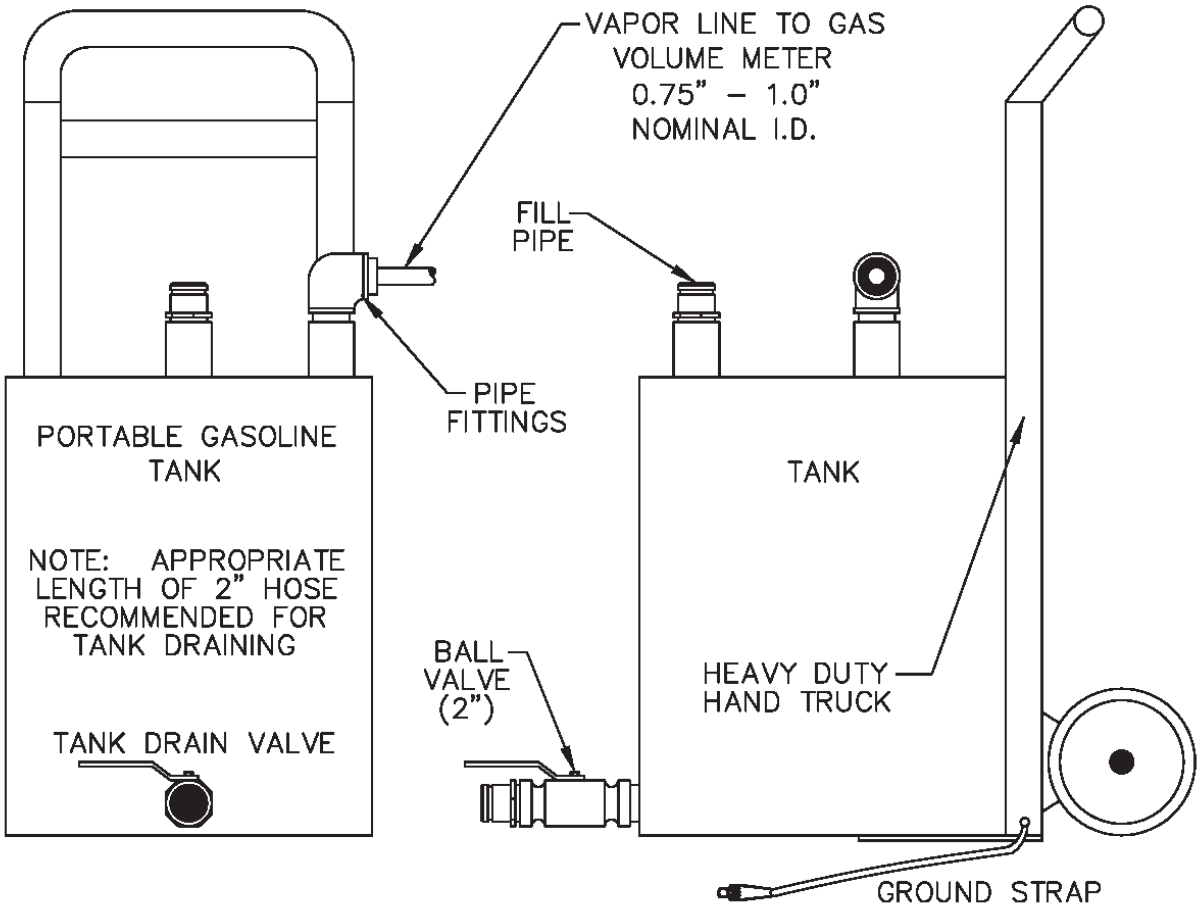

6. PRE-TEST PROCEDURES

6.1 Assemble the portable tank assembly and gas volume meter as shown in Figure 5-4. The minimum and maximum dimensions shown in Figure 5-4 shall be adhered to in all cases. **Ensure that the ground strap is properly connected to an acceptable ground**.

Note: A one-time test to verify proper design of the tee connection at the gas volume meter shall be conducted. Disconnect the V/L adaptor from the nozzle. Insert the nozzle into the portable test tank so that there is no visible gap between the nozzle boot/portable test tank fill pipe interface. Dispense between four and one-half and five (4.5 - 5.0) gallons into the portable test tank. The tee connection design passes the test if the displacement on the gas volume meter is less than 0.01 cubic feet. The result of this test shall be kept with the test equipment. If the tee connection is altered or changed, the above test must be repeated to ensure proper design.

6.2 The gas volume meter shall be calibrated, within 180 days prior to conducting this procedure. In addition, calibration shall be conducted after any repairs or alterations (changes to the operation or configuration of the meter) to the meter. Calibrations, at a minimum, shall be conducted at flowrates of 30, 60, and 90 CFH (3.7, 7.5, and 11.2 gallons/minute) in accordance with one of the following:

(a) ARB Air Monitoring Quality Assurance, Volume VI, Standard Operating Procedures for Stationary Source Emission Monitoring, January 1979, or

(b) US EPA Quality Assurance Handbook for Air Pollution Measurement Systems, Volume III, Stationary Source Specific Methods, or

(c) EPA Method 2A, Measurement of Gas Volume Through Pipes and Small Ducts (40 CFR Part 60, Appendix A), or

(d) Appropriate calibration procedures in accordance with California Department of Food and Agriculture, Division of Measurement Standards and County Department of Weights and Measures (title 4, CCR, section 3.33).

A copy of the most current calibration shall be kept with the meter.

FIGURE 5-4
Assembled Vapor to Liquid Volume Ratio Test Equipment

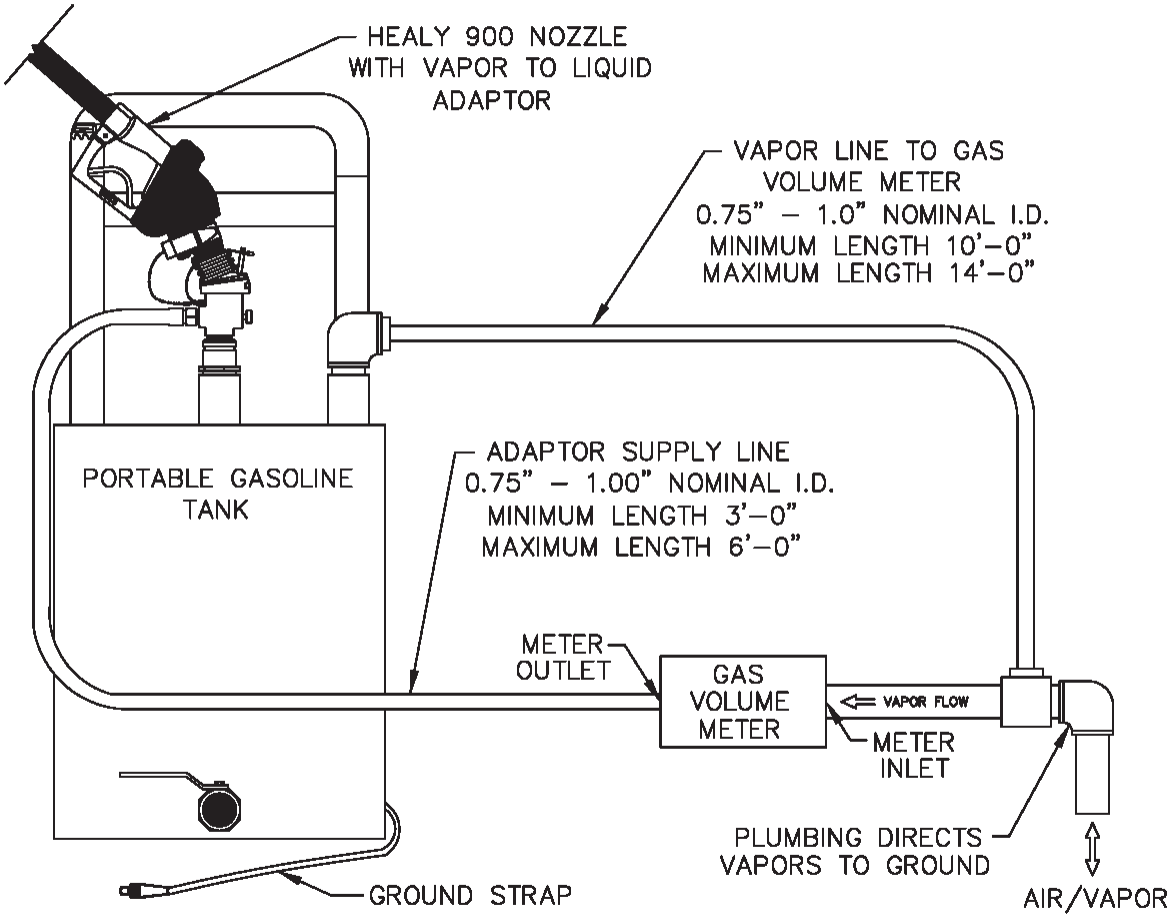

6.3 Verify that the O-ring in the V/L adaptor is present and in good condition. An O-ring with nicks, tears, or other deformations shall be replaced prior to the test. The O-ring shall be properly lubricated (see Section 5.7) to ensure a vapor tight connection.

6.4 Conduct a pre-test leak check of the V/L adaptor, the gas volume meter and the adaptor supply hose by connecting the V/L adaptor to a surrogate spout as shown in Figure 5-5 and described in Section 5.1B. Raise the test pressure to 5.00” ± 0.50” WC. There shall not be a pressure drop of more than 1.00” WC from the above starting pressure for 30 seconds from the start of the test. If the leak test passes, proceed with the V/L testing. If the leak test fails, proceed to isolate the source of the leak by pressurizing the test equipment again. Squirt liquid leak detector solution on interfaces and other potential leak sources and watch for the formation of bubbles. Once leak(s) are repaired, repeat the leak test procedure.

Note: Leak checks shall be conducted in a shaded area or away from direct sunlight. Leak checks may be conducted during V/L testing to ensure leak integrity of test equipment.

6.5 This test procedure shall be conducted with the storage tank pressure/vacuum (P/V) valve(s) installed and the Phase I vapor coupler(s) poppet(s) in the closed position with the adaptor dust cap(s) installed.

6.6 With the portable tank and V/L test equipment assembled, dispense gasoline into the portable test tank until at least 10% of the tanks total capacity has been reached. This will condition the portable tank with gasoline vapors. This conditioning shall be conducted each time the test tank is emptied prior to conducting testing at each facility.

6.7 All pressure measuring device(s) shall be bench calibrated using a reference gauge, incline manometer or NIST traceable standard at least once every six (6) months. Calibration shall be performed at 20, 50, and 80 percent of full scale. Accuracy shall be within five (5) percent at each of these calibration points.

FIGURE 5-5
Vapor To Liquid Adaptor and Gas Volume Meter Leak Test Assembly

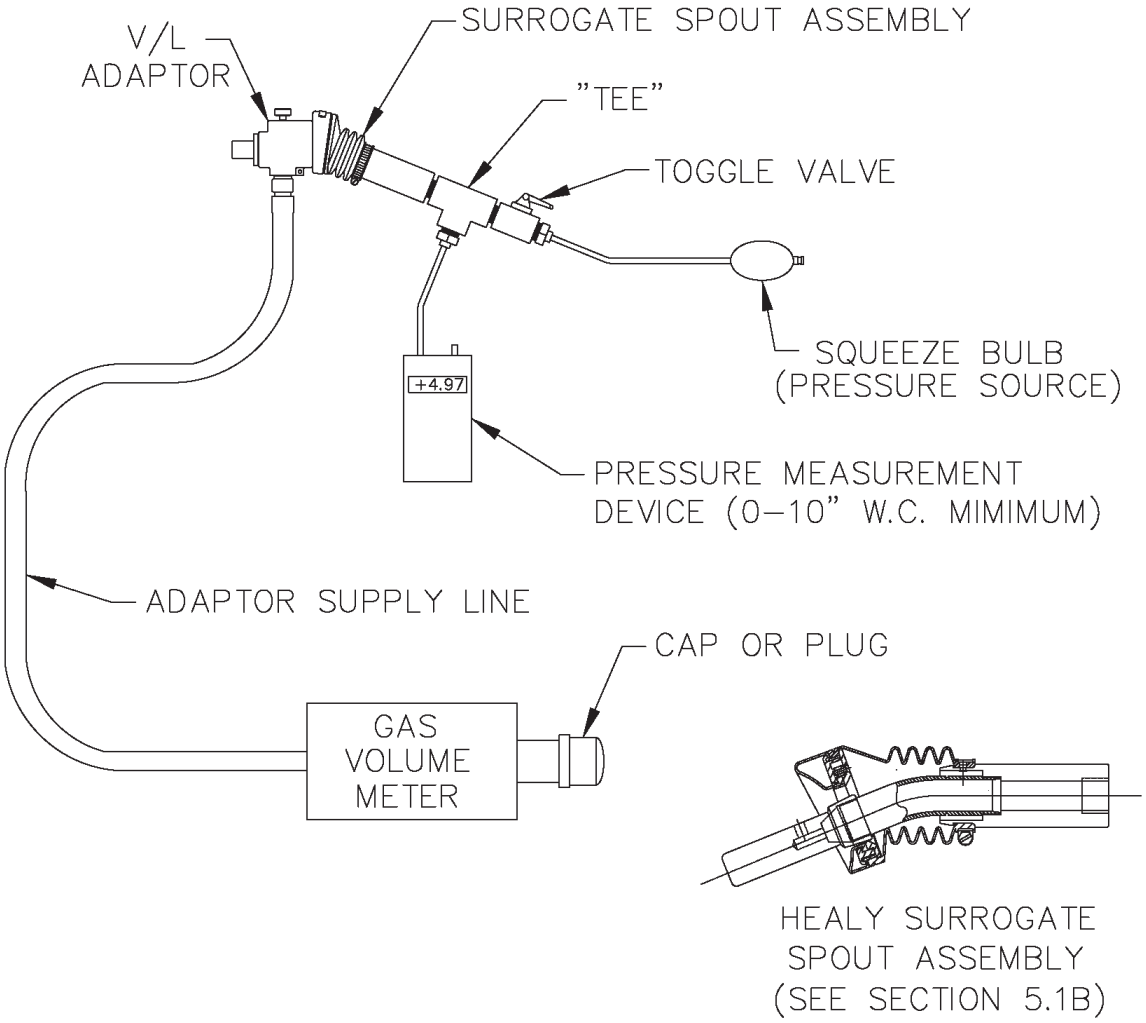

7. TEST PROCEDURES

7.1 Carefully connect the V/L adaptor to the nozzle spout as shown in Figure 5-1, isolating the vapor path of the nozzle and ensuring a tight connection.

7.2 Record the initial reading from the index of the gas volume meter on the V/L Field Data Sheet at the end of this document. This initial reading shall be taken before each test. Do not use the final reading from the preceding test as the initial reading for the current test, unless it has been verified. This is necessary since the meter index may have moved due to the low pressure drop through the meter.

7.3 Reset the stopwatch and, if appropriate, reset the totalizer on the dispenser.

7.4 Holding the nozzle lever in the maximum hand-held position in order to dispense at the highest possible flow rate and begin dispensing into the portable gasoline tank. **Ensure that the nozzle spout is in contact with the grounded tank assembly during dispensing**. Start the stopwatch when the totalizer indicates dispensing has started.

7.5 Dispense between four and one-half (4.5) and five (5.0) gallons of gasoline.

If the nozzle being tested introduces liquid into the V/L adaptor, the gas volume meter or the adaptor supply hose, the V/L of that nozzle shall be deemed a failure.

7.6 Simultaneously stop both the stopwatch and gasoline dispensing.

7.7 The following data for each test shall be recorded on the V/L Field Data Sheet:

7.7.1 Dispenser (pump) number

7.7.2 Fuel grade

7.7.3 Nozzle serial number (found below nozzle handguard)

7.7.4 Initial gas volume meter reading, in cubic feet

7.7.5 Initial totalizer reading from the dispenser, in gallons

7.7.6 Final gas volume meter reading, in cubic feet

7.7.7 Final totalizer reading from the dispenser, in gallons

7.7.8 Elapsed time during dispensing, in seconds

Note: Units other than cubic feet, gallons, and seconds may be used, provided that Equation 9-1 is appropriately modified.

7.8 If the V/L Volumetric Ratio, as determined by Equation 9-1 is between 0.95 –1.15, the grade point complies with the specifications.

7.9 If the V/L Volumetric Ratio is between 0.76 – 0.94, or greater than or equal to 1.16, conduct the test two additional times. Do not make adjustments to the gasoline dispensing or vapor recovery lines until all three test runs have been completed. Only adjustments to the V/L test equipment and the connection between the V/L adaptor and the nozzle will be allowed in order to ensure measurement accuracy. All other adjustments to the vapor recovery equipment, including but not limited to the vapor collection pump and the nozzle, are not allowed. If the V/L test equipment is adjusted, then the prior test run results for that grade point tested should not be used. Calculate the numerical average of the three test runs. If the average V/L value of these three test runs is within the allowable limits, compliance has been verified. If the resulting average is outside of the specified limits, the grade point tested does not comply with the specifications of the EO.

Note: Section 1.10 of the Healy 900 Nozzle portion of the **ARB Approved Installation, Operation and Maintenance Manual** provides instructions on making nozzle V/L adjustments.

7.10 If the initial V/L Volumetric Ratio is less than or equal to 0.75, this indicates a V/L failure of the grade point tested.

7.11 To avoid a build-up of gasoline, drain any condensed gasoline from the hoses between the gas volume meter and portable tank assembly, and the V/L adaptor and gas volume meter whenever fuel is emptied from the portable tank.

8. POST-TEST PROCEDURES

8.1 Remove the V/L adaptor from the nozzle.

8.2 Drain the dispensed product into the appropriate gasoline storage tank at the facility. **Ground the portable tank assembly to the storage tank before draining**. Do not mix product grades in the portable tank assembly without approval of the facility owner and use caution to drain the portable tank into the correct facility storage tank. If blending valves are utilized to produce product grades that do not have a dedicated storage tank, product from the blended grade shall be returned to the lower octane tank.

8.3 After concluding testing at the facility, perform a post-test leak check of the V/L adaptor, the gas volume meter and the adaptor supply hose by connecting the V/L adaptor to a surrogate spout as shown in Figure 5-5 and described in Section 5.1B. Raise the test pressure to 5.00” ± 0.50” WC. There shall not be a pressure drop of more than 1.00” WC from the above starting pressure for 30 seconds from the start of the test. The data collected during the V/L testing between the last valid test equipment leak check (see Section 6.4) and the post-test leak check is invalid if the test equipment fails this post-test leak check.

Note: Leak checks shall be conducted in a shaded area or away from direct sunlight.

8.4 Prior to transportation, the inlet and outlet of the gas volume meter shall be carefully sealed to prevent foreign matter from entering the meter.

8.5 The Authority Having Jurisdiction (AHJ) may be contacted on the requirements for storage and transportation of the portable test tank. This would typically be the local fire department.

9. CALCULATING RESULTS

9.1 The V/L Volumetric Ratio shall be calculated as shown in Equation 9-1.

$$V / L = \left[\frac{y\,(V_f - V_i)}{G_f - G_i} \right] \times 7.481 \qquad \textbf{[Equation 9-1]}$$

Where:

V/L	=	Vapor to Liquid Volumetric Ratio, dimensionless
y	=	Correction factor for gas volume meter. See Equation 9-3
V_i	=	Initial gas volume meter reading, cubic feet
V_f	=	Final gas volume meter reading, cubic feet
G_i	=	Initial totalizer reading from the dispenser, gallons
G_f	=	Final totalizer reading from the dispenser, gallons
7.481	=	Conversion factor from gallons to cubic feet, gallons per cubic foot

9.2 The gasoline dispensing rate during the V/L test shall be calculated as shown in Equation 9-2.

$$Q_g = \left[\frac{G_f - G_i}{t} \right] \times 60 \qquad \textbf{[Equation 9-2]}$$

Where:

Q_g	=	Gasoline dispensing rate, gallons per minute
G_i	=	Initial totalizer reading from the dispenser, gallons
G_f	=	Final totalizer reading from the dispenser, gallons
t	=	Elapsed time during dispensing event, seconds
60	=	Conversion factor, seconds per minute

9.3 The correction factor (determined during gas volume meter calibration) for correcting observed values of the gas volume meter shall be calculated as shown in Equation 9-3.

$$y = \left[\frac{V_r}{V_m} \right] \qquad \textbf{[Equation 9-3]}$$

Where:

y	=	Correction factor for the gas volume meter's observed reading, dimensionless
V_r	=	True volume from current calibration of gas volume meter, cubic feet
V_m	=	Corresponding observed reading from gas volume meter, cubic feet

10. REPORTING RESULTS

10.1 Report V/L test data and other information as required in the V/L Field Data Sheet at the end of this document. Districts may require the use of alternate forms, provided they include the same minimum parameters as identified in the V/L Field Data Sheet.

11. ALTERNATE PROCEDURES

11.1 This procedure shall be conducted as specified. Modifications to this test procedure shall not be used to determine compliance unless prior written approval has been obtained from the ARB Executive Officer, pursuant to Section 14 of Certification Procedure CP-201.

V/L Field Data Sheet

GDF Name and Address:

_____

_____

_____

Tee Connection Test Result (6.1) _____ ft^3
Date of Last Gas Volume Meter Calibration _____
Gas Volume Meter Correction Factor (9.3) _____
Pressure Measurement Device Calibration Date _____

Testing Firm Name and Address:

_____

_____

_____

Phone No. ( )

Test Date/Time:

Test Performed by:_____
If Required by local district, provide
Technician Certification Number:_____
Certification Expiration Date:

Pre-Test Leak Check:
Initial/Final Pressures, in. H_2O_____/ _____
Post-Test Leak Check:
Initial/Final Pressures, in. H_2O_____/ _____

A/C # _____ **P/O #** _____

District Test Witness _____
Applicable ARB Executive Order (circle one)

VR-201 or VR-202

Allowable V/L Range 0.95 – 1.15

7.7.1 Pump #	7.7.2 Fuel Grade	7.7.3 Nozzle Serial #	7.7.5 Initial Dispenser Totalizer, Gallons	7.7.7 Final Dispenser Totalizer, Gallons	Total Gas Pumped, Gallons	7.7.8 Time, Seconds	9.2 Dispensing Rate, gpm	7.7.4 Initial Meter Reading, ft3	7.7.6 Final Meter Reading, ft3	7.8, 9.1 V/L	7.9 V/L Average (if necessary)	7.8, 7.9 or 7.10 Pass or Fail

Executive Order VR-202-R
Assist Phase II EVR System
Including In-Station Diagnostic (ISD) Systems

Exhibit 6
MANUFACTURER WARRANTIES

This exhibit includes the manufacturer warranties for all components listed in Exhibit 1, including replacement parts and subparts. The manufacturer warranty tag, included with each component, shall be provided to the service station owner/operator at the time of installation.

Table of Content of Manufacturer Warranties

I. FRANKLIN FUELING SYSTEMS ENHANCED VAPOR RECOVERY LIMITED WARRANTY . 1

II. VEYANCE FUTURA HVR LOW PERM HOSE WARRANTY 5

III. VEEDER-ROOT WARRANTY 6

IV. CATLOW BREAKAWAY WARRANTY 8

V. VST BREAKAWAY WARRANTY 9

FRANKLIN FUELING SYSTEMS ENHANCED VAPOR RECOVERY LIMITED WARRANTY

Franklin Fueling Systems (FFS) Enhanced Vapor Recovery (EVR) products are offered for sale under the brand names of Healy, INCON, Phil-Tite, EBW, and Franklin Fueling Systems (collectively referred to as “FFS EVR products”). FFS EVR products are fully tested at the time of manufacture to meet the applicable performance standards and specifications to which it was certified by the California Air Resources Board (CARB) for the duration of the warranty period, as indicated in the related CARB Executive Order (EO). Performance standards and specifications are listed in Exhibit 2 (System Specifications) and Exhibit 3 (Manufacturing Performance Standards and Specifications) in the related CARB EO.

FFS warrants that FFS EVR products installed in California will conform to the warranty terms and conditions required by the California Certification Procedure for Vapor Recovery Systems at Gasoline Dispensing Facilities (CP-201) with respect to (a) transferability of warranties for FFS EVR products, (b) design changes to FFS EVR products, (c) performance specifications of the FFS EVR products, and (d) duration of the warranty period of FFS EVR products.

FFS EVR products are warranted to the initial purchaser, and any subsequent

purchaser within the warranty period, for workmanship, performance, and materials when properly installed, used and maintained in accordance with the CARB Approved Installation, Operation, and Maintenance Manuals by certified technicians or an owner/operator as defined in the related CARB EO and to generally accepted industry standards.

FFS reserves the right to make changes in the design or to make additions or improvements with respect to FFS EVR products without incurring any obligation to modify or install same on previously manufactured products, upon written approval from CARB.

FFS reserves the right to change or cancel all or any part of this limited warranty, upon written approval from CARB. Any such change or cancellation will be effective for products sold by FFS after the date of such change or cancellation. No agents, distributors, dealers, or employees of FFS are authorized to make modifications to this warranty or to make additional warranties with respect to any FFS EVR products. Accordingly, any statements made by individuals, whether oral or written, shall not constitute a warranty of FFS and shall not be relied upon.

FFS warrants the workmanship and materials of FFS EVR products to be free of defects, at the time of sale by FFS, for a period of one year (12 months) from the date of installation. When warranty for FFS EVR products cannot be verified to date of installation, claims will be honored for a period of fifteen (15) months from the date of purchase. When warranty for FFS EVR product cannot be verified to date of installation or date of purchase, claims will be honored for a period of eighteen (18) months from date of manufacture by FFS (for location of date of manufacture on components, see related CARB EO Exhibit 1 – Equipment List). In all cases, installation date or purchase date will require providing formal documentation to FFS as evidence of applicable warranty coverage or date of manufacture will be used to determine duration of warranty period. Formal documentation may include, but is not limited to, FFS authorized service company and distributor work orders, startup/installation documentation, maintenance logs, and/or sales receipts.

FFS shall not be liable for any loss or damage whatsoever, including, without limitation, loss in profits, loss in sales, loss of fuel or other products, loss of use of equipment, facilities or service, costs of environmental remediation, diminution in property value, or any other special, incidental or consequential damages of any type or nature, and all such losses or damages are hereby disclaimed and excluded from this limited warranty.

Use of non-FFS replacement parts, the unauthorized addition of non-FFS items to FFS EVR products, and the unauthorized alteration of FFS EVR products will void warranty. FFS shall, as to each defect, be relieved of all obligations and liabilities under a components warranty if the FFS EVR products have been operated with any accessory, equipment, or a part not specifically approved by FFS and not manufactured by FFS to FFS design and specifications.

FFS EVR product warranty shall not apply to any products which have been

mishandled, incorrectly installed or applied, altered in any way, which has been repaired by any party other than qualified technicians, or when such failure is due to misuse or conditions of use (such as, but not limited to, blown fuses, sheared breakaway screws, corrosion damage, negligence, accidents, or normal wear of plastic/rubber parts including scuff guards and seals). FFS EVR product warranty shall not apply to acts of terrorism, acts of war, or acts of God (such as, but not limited to, fire, flood, earthquake, or explosion). Unless otherwise expressly provided in a specific FFS written warranty, FFS does not provide coverage for labor or shipping charges, shall not be liable for any costs or charges attributable to any product testing, maintenance, installation, repair or removal, or any tools, supplies, or equipment need to install, repair, or remove any FFS EVR product.

Other than those FFS EVR products specifically designated for fuel concentrations of 85% ethanol with 15% gasoline (E85), FFS EVR product warranty shall not cover any components that have been in contact with fuel concentrations greater than 15% ethanol or 15% methanol by volume (up to E15/M15).

Claims for FFS EVR product warranty must be submitted in writing promptly after discovery of a defect with a Returned Goods Authorization (RGA) Number from FFS. FFS will honor warranty claims processed through FFS authorized service companies and distributors only. FFS will honor warranty claims submitted no more than thirty (30) days after the end of the applicable warranty period. Product returned for warranty inspection must be shipped freight prepaid to FFS's facilities, with the RGA Number indicated on the returned product, to the following address for inspection:

INCON branded products:
Franklin Fueling Systems, Inc.
ATTN: Warranty Department
34 Spring Hill Road
Saco, ME 04072 USA

All other FFS EVR Products:
Franklin Fueling Systems, Inc.
ATTN: Warranty Department
3760 Marsh Road
Madison, WI 53718 USA

Franklin Fueling Systems, upon inspection and after determination of a warranty defect, will at its option, repair or replace defective parts returned to FFS's facility or where the product is in use. Repaired or replaced parts will be returned freight prepaid by FFS.

A copy of this limited warranty is to be retained with the equipment, on-site with the facility owner / operator.

Component Model Number: _____

Component Date of Manufacturer: _____

Component Install Date: _____

Facility Name: _____

Facility Address: _____

Installer Name: _____

Installer Signature: _____

VEYANCE FUTURA HVR LOW PERM HOSE WARRANTY

WARRANTY FOR VAPOR RECOVERY SYSTEMS EQUIPMENT USED IN CALIFORNIA: Seller warrants Product(s) consisting of vapor recovery system equipment used in California ("California Vapor Recovery Product(s)") to meet the performance standards and specifications to which such Product(s) were certified by the California Air Resources Board for a period of one (1) year from the date of installation. This warranty extends to Buyer and any subsequent Buyer of the California Vapor Recovery Product(s). **SELLER MAKES NO REPRESENTATION OR WARRANTY OF ANY KIND WITH RESPECT TO PRODUCT(S), EXPRESS OR IMPLIED, EXCEPT AS EXPRESSLY PROVIDED ABOVE.**

Warranty Card

WARRANTY TAG

PART #:_____
INSTALLATION DATE:_____ NAME OF INSTALLER:_____
LOCATION:_____

This hose was factory tested to and met all applicable performance standards & specifications to which it was certified: Reference all applicable CARB Executive Orders, CARB Test Procedures, Exhibits, and UL Standard 330.

The manufacture date is represented by a 4 digit julian date code stamped on the hose fitting.
Example: "1021" represents the 102nd day of 2011.

1. Complete warranty tag at time of installation.
2. Return warranty tag or other evidence of purchase and installation with hose for any necessary warranty claims.

WARRANTY FOR VAPOR RECOVERY SYSTEMS EQUIPMENT USED IN CALIFORNIA: Seller warrants Product(s) consisting of vapor recovery system equipment used in California ("California Vapor Recovery Product(s)") to meet the performance standards and specifications to which such Product(s) were certified by the California Air Resources Board for a period of one (1) year from the date of installation. This warranty extends to Buyer and any subsequent Buyer of the California Vapor Recovery Product(s). **SELLER MAKES NO REPRESENTATION OR WARRANTY OF ANY KIND WITH RESPECT TO PRODUCT(S), EXPRESS OR IMPLIED, EXCEPT AS EXPRESSLY PROVIDED ABOVE.**

VEYANCE TECHNOLOGIES

VEEDER-ROOT WARRANTY

This warranty applies only when the product is installed in accordance with Veeder-Root's specifications by Veeder-Root certified installers. This warranty will not apply to any product which has been subjected to misuse, negligence, accidents, systems that are misapplied or are not installed per Veeder-Root specifications, modified or repaired by unauthorized persons, or damage related to acts of God. Veeder-Root is not liable for incidental, consequential, or indirect damages or loss, including, without limitation, personal injury, death, property damage, environmental damages, cost of labor, clean- up, downtime, installation and removal, product damages, loss of product, or loss of revenue or profits. This warranty applies to the initial purchaser and any subsequent purchaser for the duration of the warranty period. THE WARRANTY CONTAINED HEREIN IS EXCLUSIVE AND THERE ARE NO OTHER EXPRESS, IMPLIED, OR STATUTORY WARRANTIES. WARRANTIES OF MERCHANTABILITY OR FITNESS FOR A PARTICULAR PURPOSE ARE EXPRESSLY EXCLUDED.

TLS-350R, TLS-350 PLUS, TLS-350J AND TLS-300I/C, AND TLS2 MONITORING SYSTEMS
We warrant that this product shall be free from defects in material and workmanship and is compliant with all applicable performance standards and specifications for which it has been certified, for a period of one (1) year from the date of installation when proof of date of installation is provided or twenty-four (24 months) from the date of manufacture when proof of date of installation is not provided. During the warranty period, we or our representative will repair or replace the product, if determined by us to be defective, at the location where the product is in use and at no charge to the purchaser. LAMPS, FUSES, AND LITHIUM BATTERIES ARE NOT COVERED UNDER THIS WARRANTY.

If "Warranty" is purchased as part of the Fuel Management Service, Veeder-Root will maintain the equipment for the life of the contract in accordance with the written warranty provided with the equipment. A Veeder-Root Fuel Management Services Contractor shall have free site access during Customer's regular working hours to work on the equipment. Veeder-Root has no obligation to monitor federal, state or local laws, or modify the equipment based on developments or changes in such laws.

MODULES, KITS, OTHER COMPONENTS (PARTS PURCHASED SEPARATE OF A COMPLETE CONSOLE)
We warrant that this product shall be free from defects in material and workmanship and is compliant with all applicable performance standards and specifications for which it has been certified, for a period of one (1) year from the date of installation when proof of the date of installation is provided or fifteen (15) months from the date of manufacture when proof of date of installation is not provided. We warrant that the lithium batteries (excluding EVR BATTERY PACK) shall be free from defects in material and workmanship for a period of three (3) months from date of invoice. We will repair or replace the product if the product is returned to us; transportation prepaid by user, within the warranty period, and is determined by us to be defective. LAMPS AND FUSES ARE NOT COVERED UNDER THIS WARRANTY.

IN STATION DIAGNOSTICS (ISD)

For components used in ISD systems (Vapor Flow Sensor, Vapor Pressure Sensor, Software, TLS RF, Wireless Repeater, Wireless Transmitter & Wireless Receiver), excluding LAMPS, FUSES, AND LITHIUM BATTERIES, the following warranty applies:

We warrant that this product shall be free from defects in material and workmanship and is compliant with all applicable performance standards and specifications for which it has been certified,, for a period of one (1) year from the date of ISD start-up when proof of the date of install is provided or twenty-four (24) months from the date of manufacture when proof of date of installation is not provided. During the warranty period, we and or our representative will repair or replace the product, if determined by us to be defective, at the location where the product is in use, at no charge to the purchaser.

For ISD components installed after the initial ISD start-up, we warrant that these products shall be free from defects in material and workmanship and is compliant with all applicable performance standards and specifications for which it has been certified, for a period of one (1) year from the date of installation when proof of the date of install is provided or fifteen (15) months from date of manufacture when proof of date of installation is not provided. We will repair or replace the product if the product is returned to us; transportation prepaid by user, within the warranty period, and is determined by us to be defective.

EVR BATTERY PACK

We warrant that this product shall be free from defects in material and workmanship and is compliant with all applicable performance standards and specifications for which it has been certified, for a period of one (1) year from the date of installation when proof of the date of install is provided or fifteen (15) months from the date of manufacture when proof of date of installation is not provided. The replacement EVR Battery Pack warranty period will be the REMAINING warranty period of the original EVR Battery Pack. LAMPS, FUSES, AND LITHIUM BATTERIES OTHER THAN THE EVR BATTERY PACK, ARE NOT COVERED UNDER THIS WARRANTY.

Warranty Card Language

EQUIPMENT WARRANTY

VEEDER-ROOT

Veeder-Root warrants that this product shall be free from defects in material and workmanship and is compliant with all applicable performance standards and specifications for which it has been certified, for a period of one (1) year from date of installation when proof of the date of install is provided, or either twenty-four (24) months or fifteen (15) months from date of manufacture (see terms below) when proof of date of installation is not provided.

Date of manufacture:
*Product S/N:_____
*Date of installation:_____
*Technician number:_____

*Installation Address:
Street:_____
City:_____State:_____
Phone:_____-_____-_____

*Required Information

This component was tested at the time of manufacture and meets all the applicable performance standards and specification to which it was certified: E.O. VR-202, VR203 and VR-204.

For detailed warranty terms see EO warranty exhibits (VR-202 Exhibit 6, VR-203/VR-204 Exhibit 3) on the ARB Web site at *http://www.arb.ca.gov/vapor/eo-evrphaseII.htm*

577013-868, Rev. G

CATLOW

CAMTWIST Magnetic Breakaway Warranty	577014-071 DATE 12/2013

EQUIPMENT WARRANTY

VEEDER-ROOT

Veeder-Root warrants that this product shall be free from defects in material and workmanship and is compliant with all applicable performance standards and specifications for which it has been certified, for a period of one (1) year from date of installation when proof of the date of install is provided. Or fifteen (15) months from date of manufacture (see terms below) when proof of date of installation is not provided.

Date of manufacture:
*Product S/N:_____
*Date of installation:_____
*Technician number:_____

*Installation Address:
Street:_____
City:_____ State:_____
Phone: _____-_____-_____

*Required Information

This component was tested at the time of manufacture and meets all the applicable performance standards and specification to which it was certified: E.O. VR-201 and VR-202.

For detailed warranty terms see EO warranty exhibits (VR-201/VR-202 Exhibit 6) on the ARB Web site at: *http://www.arb.ca.gov/vapor/eo-evrphaseII.htm*

CUSTOMER COPY

To be left at gasoline dispensing facility, GDF, at time of installation

Manufacturing Date:

Serial Number and Install Date:
(Fill in at time of installation)

VST Warranty Statement

This limited warranty is given by Vapor Systems Technologies, Inc. (hereinafter VST) to the initial purchaser, and any subsequent purchasers of new equipment, within the warranty period of products manufactured by VST. VST products:

- Are factory tested and meet all applicable performance standards and specifications.
- Should be used in compliance with all applicable federal, state, and local laws and regulations to which they were certified.
- Are warranted to be free from defect in material and workmanship with ongoing compliance to all applicable performance standards and specifications under normal use, service, proper installation, inspections, and maintenance practices per manufacturer specifications.

VST warrants the materials and workmanship to be free from defects in accordance with the following provisions:

1. This warranty does not apply to any products that have:
   - Been subject to misuse, abuse, tampering, negligence, accident, or irreparable drive-off off damage.
   - Been misapplied, improperly installed, or not installed per VST's instructions and specifications.
   - Been modified, altered, rebuilt or repaired by unauthorized persons or outside the criteria of VST specifications.
   - Been improperly maintained and/or improperly inspected in accordance with the system's or product's periodic maintenance schedule, and any inspection and/or maintenance requirements imposed by the State or any government agency.
   - Been exposed to contact with fuels containing greater than 5% methanol, 10% ethanol, or 15% MTBE by volume or any exposure to M85/E85 fuel.
   - Been subject to damage resulting from acts of God.
2. This warranty does not cover and VST is not responsible or liable for:
   - Incidental, consequential and/or indirect damages or loss including, but not limited to, personal injury, death, property damage, environmental damage, cost of labor, clean-up, downtime, installation and removal, product damage, and loss of product, revenue or profits.
   - Any claims or lawsuits against the purchaser and/or distributor.
   - Labor or materials necessary to disconnect or connect the warranted product for return to VST.

VST products used on systems that have not been listed by a nationally-recognized testing laboratory (NRTL) or use that falls outside intended field of use voids all warranties.

The duration of this warranty is TWELVE (12) MONTHS from the time of installation provided timely valid proof of installation is submitted to VST. Valid proof of installation options include, but are not limited to:

- VST Product Warranty Registration Card is properly completed and returned to VST at time of installation and within (6) SIX MONTHS from the date of manufacture.

  OR

!

- In lieu of a legitimate, completed and returned VST Product Warranty Registration Card within the first (6) SIX MONTHS from the date of manufacture, VST requires the following:

    1. A completed gasoline dispensing facility (GDF) monthly maintenance log from the month in which the VST equipment was installed and documented, **AND**
    2. One of the following documents that may be used as a reference installation date:
        - A valid distributor invoice
        - A valid contractor invoice

The above options must be clearly marked with:

- All VST product serial numbers
- Product sale date and/or installation date
- Purchaser name, address, and phone number

If valid proof of installation is not received by VST, as noted above, the warranty period is TWELVE (12) MONTHS from the VST date of manufacture.

In the event of a warranty claim:

- The purchaser/distributor must obtain a copy of a Return Goods Authorization (RGA) from VST prior to returning product so as to ensure proper processing. All warranty claim returns must be shipped freight prepaid by the purchaser and/or distributor.
- Warranty status will be determined upon inspection at VST's facility within THIRTY (30) DAYS of receipt by VST of the warranted products. All returned merchandise deemed *Not Under Warranty*; will be held by VST for SEVEN (7) BUSINESS DAYS prior to disposal. Return of this product to the purchaser/distributor will require purchaser/distributor to issue a call tag within SEVEN (7) BUSINESS DAYS of notification.
- Repair or replacement of the warranted product is the **EXCLUSIVE REMEDY** under the terms of this warranty. No other warranty exists.

VST, as to each defect, shall be relieved of all obligations and liabilities under this Limited Warranty if the products have been operated with any accessory, equipment, or a part not specifically approved by VST and the appropriate governing regulatory agencies.

THIS LIMITED WARRANTY IS EXCLUSIVE AND IS IN LIEU OF ALL OTHER WARRANTIES. VST MAKES NO OTHER WARRANTIES (WHETHER WRITTEN OR ORAL), EXPRESS OR IMPLIED, INCLUDING BUT NOT LIMITED TO ANY IMPLIED WARRANTY OF MERCHANTABILITY, FITNESS FOR A PARTICULAR PURPOSE, OR OTHERWISE, AND ANY OTHER SUCH WARRANTIES ARE HEREBY DISCLAIMED.

VST NEITHER ASSUMES NOR AUTHORIZES ANY OTHER PERSON OR ENTITY TO ASSUME FOR IT OR BIND IT TO ANY OTHER LIABILITY OR OBLIGATION RELATED TO OR IN CONNECTION WITH THIS LIMITED WARRANTY.

VST reserves the right to make changes at any time to prices and designs, or make additions or improvements with respect to its products, without incurring any obligation to modify or install same on previously manufactured products.

!

Exhibit 7
NOZZLE BAG TEST PROCEDURE

Verification of the integrity of the vapor valve shall be performed on installed nozzles by use of the following test.

Note: The following procedure requires that all nozzles on a dispenser be bagged at the same time. Bagging only one nozzle on a dispenser during this procedure may bias the results toward compliance.

a. Seal all nozzles on a dispenser in plastic bags, using tape or other means to secure the bag around the base of the nozzle (see Figure 7-1). Any plastic bag large enough to enclose the nozzle and having a thickness of no greater than 2 mils can be used.

b. Initialize the dispenser for fueling as follows:

   1. Inform the station operator that you are running a test and ask the operator to initialize the dispenser; or

   2. Swipe a credit card in the dispenser card reader.

c. Activate the Healy vacuum pump by lifting one of the nozzles off the dispenser holster and selecting a grade of fuel. **Do not dispense any fuel**.

d. With the dispenser initialized and the vacuum pump activated, observe all bagged nozzles for 30 seconds. Any nozzle where the bag can be seen visually collapsing has a defective vapor valve and the dispenser shall be removed from service immediately.

e. Record the test results on the “Nozzle Bag Test Results” form provided in this Exhibit. Districts may require use of an alternate form, provided that the alternate form includes the same minimum parameters.

f. Remove the bags from all the nozzles tested and disengage the dispenser by returning the nozzles to the dispenser holsters.

g. Repeat steps **a** through **f** for each dispenser.

FIGURE 7-1

Typical Example of Bagging a Nozzle

NOZZLE BAG TEST RESULTS

SOURCE INFORMATION		TEST COMPANY INFORMATION	
Facility (DBA) / Site Address:	Facility Representative / Title:	Test Company Name / Address	# of Nozzles:_____ # Nozzles Tested:_____ # Nozzles Passed:_____ # Nozzles Failed: _____ # Nozzles not Tested: _____
Print Name	Print Name	Print Name	
Street Address	Title ( )	Street Address	
City Zip	Phone No.	City Zip	
District Inspector:	☐ P / O ☐ S / A ☐ A / C Number:	Date of Test:	Time of Test:

Dispenser	Gas Grade	Nozzle Type	Bag Collapse after 30 Seconds?
			☐Yes ☐No
			☐Yes ☐No
			☐Yes ☐No
			☐Yes ☐No
			☐Yes ☐No
			☐Yes ☐No
			☐Yes ☐No
			☐Yes ☐No
			☐Yes ☐No
			☐Yes ☐No
			☐Yes ☐No
			☐Yes ☐No
			☐Yes ☐No
			☐Yes ☐No
			☐Yes ☐No
			☐Yes ☐No
			☐Yes ☐No
			☐Yes ☐No

Exhibit 8
REQUIRED ITEMS IN CONDUCTING TP-201.3

The instructions below are required when conducting TP-201.3 for these systems. The tester shall document that each step was followed as indicated below and shall include this page of the Exhibit with the submission of TP-201.3 test results. Note that districts may require use of an alternate form to meet these requirements, provided the alternate form includes the same minimum parameters.

1. Prior to conducting TP-201.3, all four ball valves on the Healy Clean Air Separator (CAS) shall be closed, as shown in Figure 8-1 or Figure 8-1H, to isolate it from the Underground Storage Tank (UST) system to permit the pressurization of the UST system. Figure 8-1 applies to vertical Clean Air Separator installations and Figure 8-1H applies to horizontal Clean Air Separator installations.

2. Conducting TP-201.3 with any dispenser piping test valve in the closed position is **not** permitted. Any dispenser with a dispenser piping test valve in the closed position while conducting TP-201.3 will bias the test towards compliance.

3. After conducting TP-201.3, the four ball valves on the Healy Clean Air Separator (CAS) shall be locked in their normal operating positions as shown in Figure 2-2 or 2-2H, Exhibit 2 of Executive Orders VR-201 and VR-202. Figure 2-2 applies to vertical Clean Air Separator installations and Figure 2-2H applies to horizontal Clean Air Separator installations.

Required Steps	Verification (please circle)
1. All four Clean Air Separator ball valves closed before conducting TP-201.3	Yes No
2. All dispenser piping test valves open before conducting TP-201.3	Yes No
3. All four Clean Air Separator ball valves in normal operating positions after conducting TP-201.3.	Yes No

Test Company: _____ Facility Name: _____

_____ _____ _____
Print Name (Technician) Signature Date

_____ _____
Technician Certification Number ICC or District Training Certification, as applicable) Expiration Date

FIGURE 8-1
Configuration of Healy Clean Air Separator to Conduct TP-201.3

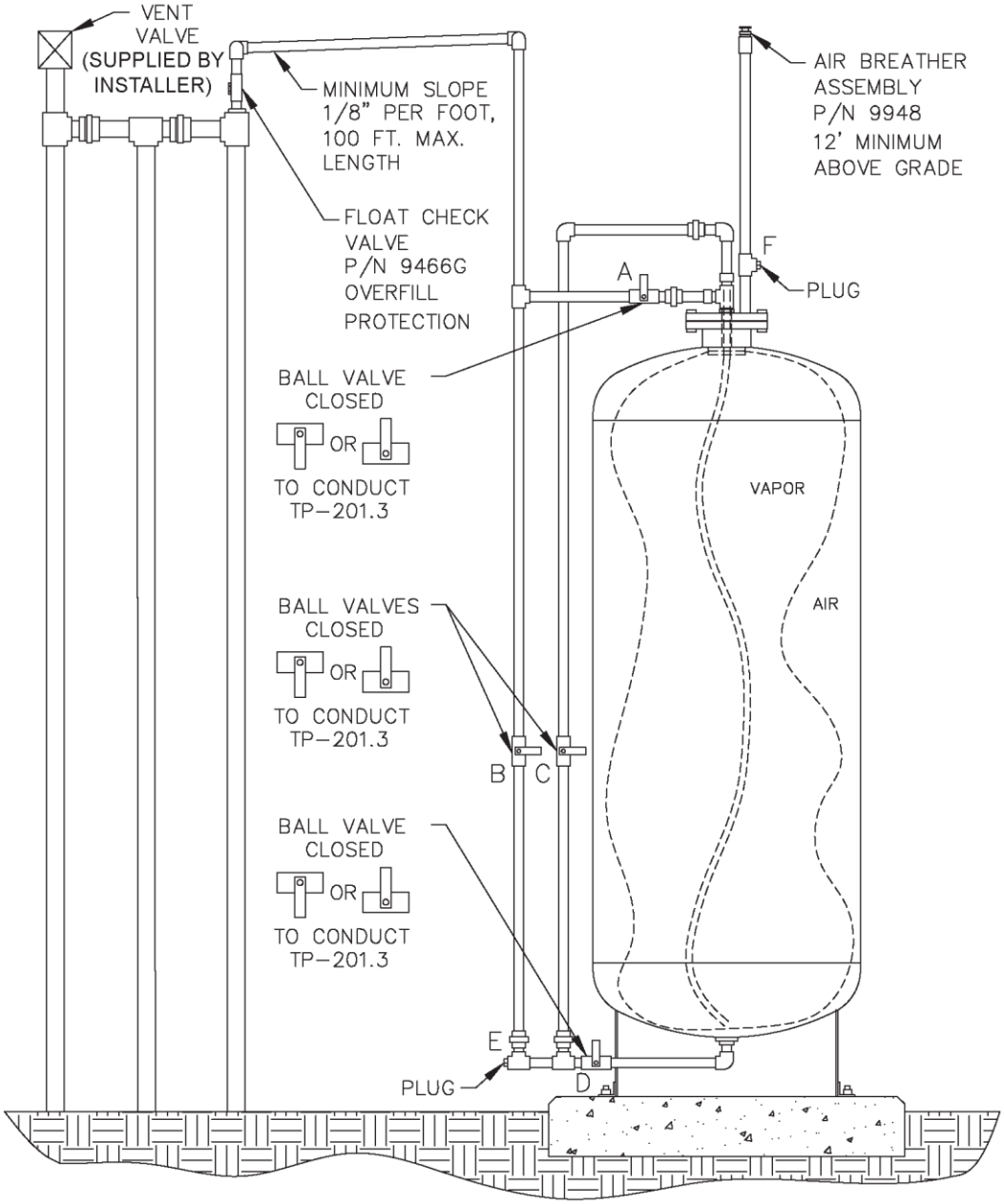

FIGURE 8-1H
Configuration of Healy Clean Air Separator to Conduct TP-201.3

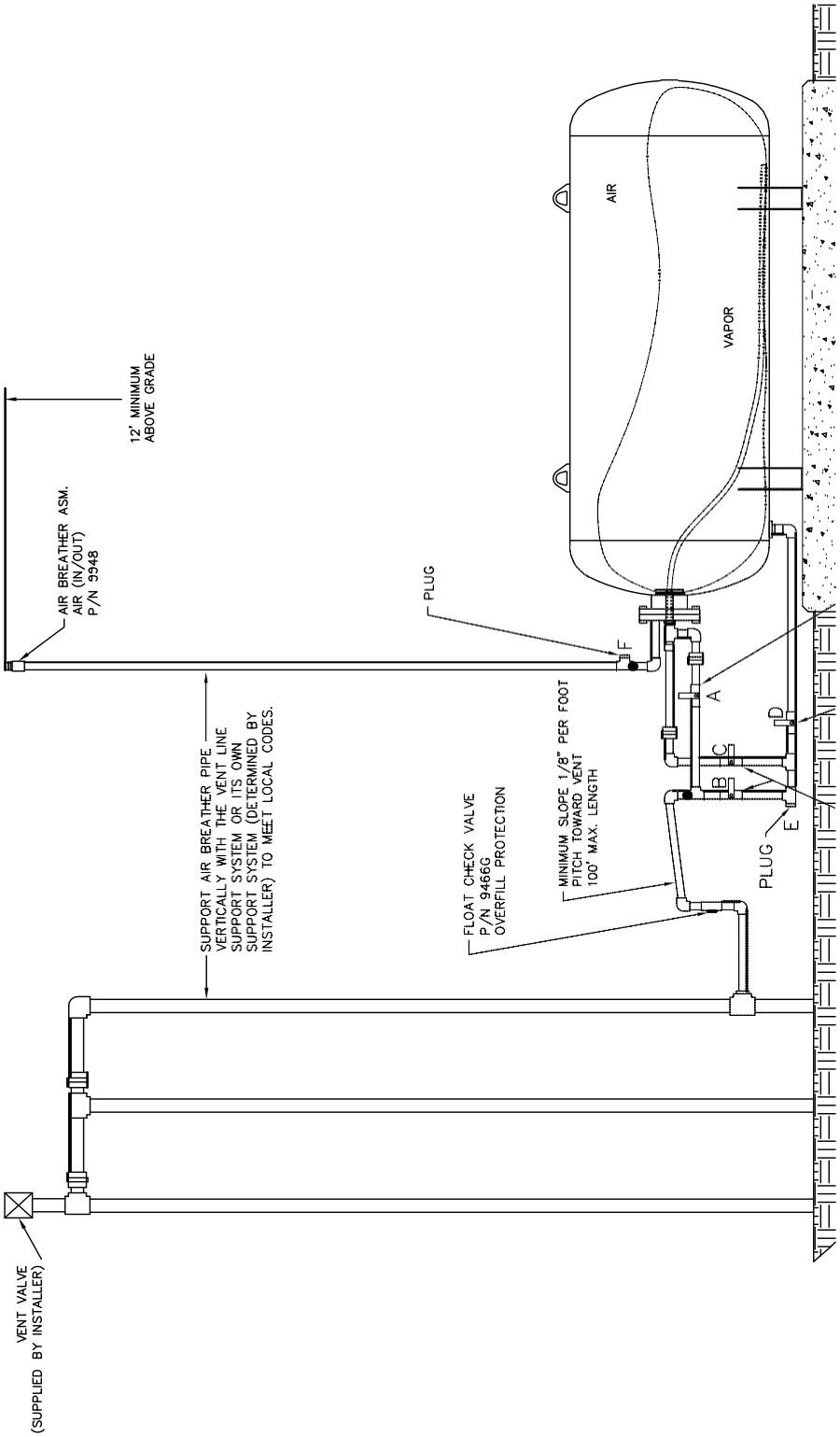

Executive Order VR-202-R
Assist Phase II EVR System
Including In-Station Diagnostic (ISD) Systems

Exhibit 9
VEEDER-ROOT ISD OPERABILITY TEST PROCEDURE

The following procedures shall be used at field sites to determine the operability of the Veeder-Root ISD system to satisfy the requirements documented in VAPOR RECOVERY CERTIFICATION PROCEDURE, CP-201, CERTIFICATION PROCEDURE FOR VAPOR RECOVERY SYSTEMS AT GASOLINE DISPENSING FACILITIES. Testing the ISD equipment in accordance with this procedure will verify the equipment's operability for Vapor Containment Monitoring and Vapor Collection Monitoring.

Veeder-Root's TLS console ISD System Self-Test Monitoring algorithms are designed to verify proper selection, setup and operation of the TLS console modules and sensors and will not complete and report passing test results in the event of a failure of components used in the system. Completed ISD monitoring tests are evidence that:

- The system was properly powered for data collection
- All necessary ISD sensors were setup and connected
- All necessary ISD sensors were operating within specification
- All internal components including TLS console modules were properly setup and operating within specification

Veeder-Root recommends printing a copy of the ISD ALARM STATUS and ISD DAILY report (REF. Section 5, Operation of the ISD Install, Setup & Operation Manual) periodically to determine that compliance tests are being completed in accordance with local and state regulations.

A step-by-step worksheet for recording data from the following operability tests is provided at the end of this Exhibit.

Note that districts may require use of an alternate form to meet these requirements, provided the alternate form includes the same minimum parameters.

Veeder Root ISD Operability Testing

Definitions common to all certification and test procedures are in:

D-200 Definition for Vapor Recovery Procedures

For the purpose of this procedure, the term “ARB” refers to the California Air Resources Board, and the term, “ARB Executive Officer” refers to the Executive Officer of the ARB or his or her authorized representative or designee.

Vapor Pressure Sensor Verification Test

1. Purpose and Applicability

1.1. The purpose of this test procedure is to determine if the Veeder-Root Vapor Pressure Sensor (listed in Exhibit 1) is operating in accordance with the pressure sensor requirements of Exhibit 2. This procedure is used:

1.1.1. To determine the measured ullage pressure in underground gasoline storage tanks (UST) installed at gasoline dispensing facilities (GDFs) equipped with a Assist Phase II enhanced vapor recovery system with ISD and compare to the Veeder-Root Vapor Pressure Sensor (Vapor Pressure Sensor) reading at the TLS console.

1.1.2. To determine whether the Vapor Pressure Sensor complies with the performance specification when the sensor is exposed to ambient pressure.

1.2. This procedure is applicable for compliance testing.

2. Principle and Summary of Test Procedure

2.1. Determining UST Pressure - If the Vapor Pressure Sensor is installed on the vapor return line of a dispenser closest to the USTs, the pressure of the UST is determined at the Phase I vapor recovery adaptor (dry break assembly) with a vapor coupler test assembly as shown in Figures 2 and 3 of TP-201.3 (*Determination of 2 Inch WC Static Pressure Performance of Vapor Recovery Systems of Dispensing Facilities*) or a modified dust cap test assembly as shown in Figures 9-1 and 9-2 of this exhibit. The modified dust cap test assembly is equipped with a center probe, which opens the dry break, and a quick connect fitting that is connected to an electronic pressure measuring device or digital manometer. The modified dust cap test assembly should open the dry break with minimal venting of the UST. This test can be performed while product is being dispensed into motor vehicles.

If the Vapor Pressure Sensor is installed on the vent stack, the pressure of the USTs is determined at the vent stack test port as shown in Figure 9-5. The vent stack test port is equipped with a quick connect fitting that is connected to an electronic pressure measuring device or digital manometer. This test can be performed while product is being dispensed into motor vehicles.

2.2. Determining Ambient Pressure - The Vapor Pressure Sensor is subjected to ambient pressure by turning the Vapor Pressure Sensor valve, which is located on the vent stack or in the dispenser closest to the tanks, to the atmospheric valve position as shown in Figure 9-3. This test can be performed while product is being dispensed into motor vehicles.

3. Biases and Interferences

3.1. This test shall not be conducted within 30 minutes following gasoline transfer from a cargo tank.

3.2. The range of the Vapor Pressure Sensor is between positive five (+5.0) and negative five (-5.0) inches water column. If the headspace of the underground storage tank is under a vacuum of greater than negative five inches water column (i.e. -6, -7, -8 etc.), the results of section 8.4 couldbe biased toward non compliance. Under such condition, the vacuum level should be relieved to a value between negative five and negative two inches water column by depressing the poppet of the Phase I vapor adaptor return poppet. Once an adequate amount of air has been ingested into the headspace, the remaining vacuum must be allowed to stabilize for a minimum of fifteen (15) minutes before taking a reading.

3.3. If the Vapor Pressure Sensor is located at the vapor return line of the dispenser, the UST pressure must be determined at the Phase I vapor adaptor as shown in Figure 9-1 and 9-2 of this exhibit.

3.4. If the Vapor Pressure Sensor is located at the vent stack, the UST pressure must be determined at the vent stacktest port as shown in Figure 9-5.

3.5. If Veeder-Root's "Maintenance Tracker" is installed and enabled, access to the "diagnostic mode" and "set-up mode" of the TLS Console is prohibited unless a Maintenance Tracker Technician Key or personal computer equipped with Veeder-Root's ISD Setup Tool Software Version 1.09 or higher is made available. Maintenance Tracker is an optional security device designed to prevent unauthorized tampering and clearing of Veeder-Root tank monitoring and ISD alarms. Maintenance Tracker resides within the TLS console and when enabled, a message will appear on the two line display of the TLS console. For additional instructions on how to access the desired parameters to complete this test procedure, see Exhibit 12; "Veeder-Root Maintenance Tracker (Optional)".

3.6. The vapor pressure sensor value observed at the TLS console is refreshed at the frequency defined in Table 9-1. Prior to the simultaneously recording the values observed at the digital manometer and the TLS console, the technician should wait until the value the TLS console is refreshed.

TABLE 9-1
Vapor Pressure Sensor Refresh Rate

Veeder-Root Vapor Pressure Sensor	TLS Console Refresh Rate
Wired	~10 seconds
Wireless	~60 seconds

4. Range and Accuracy

4.1. A digital (electronic) manometer with 0.01 inches WC, or better, resolution. The sensor must have a minimum measuring range of +/- 10 inches WC. The sensor must be accurate to 0.05 inches WC for any pressure measurement made during the prescribed tests. For a manometer with a +/- 10 inches WC measurement range, this requires a 0.25% full scale accuracy assuming a 20 inch full scale range (i.e. -10 to +10).

5. Equipment

5.1. The Vapor Pressure Sensor is located at the vapor return line of the dispenser closest to the USTs, the vapor adapter dust cap test assembly shall be modified in the following manner:

5.1.1. Install a probe in the center of the dust cap as shown in Figure 9-1 (one method is to tap and thread probe). The probe shall be of sufficient length to open approximately ½ inch of the dry break while allowing the cap to maintain a leak tight seal on the adaptor.

5.1.2. Install female quick connect fitting on the top of the dust cap, offset from the center probe as shown in Figure 9-1. A Swagelok, part number SS-QC4-B-4-PM, quick connect fitting or equivalent can be used.

5.1.3. Use “Tygon tubing” or equivalent to connect the manometer to the

dust cap (Figure 9-2). Install a male quick connect fitting (Swagelok part number SS-QC4-5-400 or equivalent can be used) on one end of a ferrule stainless steel tube (or equivalent material). Connect one end of the “Tygon tubing” to the stainless steel tube and connect the other end to the digital manometer (see Figure 9-2).

5.2. Alternatively, the vapor coupler test assembly, Figures 2 and 3 of TP-201.3 may be used in lieu of the dust cap test assembly.

5.3. If the Vapor Pressure Sensor is installed at the vent stack, the following test assembly is required:

5.3.1. A test port and female quick connect fitting shall be installed on the plumbing fixture below the Vapor Pressure Sensor enclosure as shown in Figure 9-5. A Swagelok, part number SS-QC4-PM, quick connect fitting or equivalent can be used.

5.3.2. Use “Tygon tubing” or equivalent to connect the manometer to the test port (Figure 9-2). Install a male quick connect fitting (Swagelok part number SS QC4-5-400 or equivalent can be used)
on one end of a ferrule stainless steel tube (or equivalent material). Connect one end of the “Tygon tubing” to the stainless steel tube and connect the other end to the digital manometer (see Figure 9-2).

5.3.3. Various pipe fittings to accommodate ¼ inch test port, including half inch NPT female tee fitting and half inch to quarter inch reducer, as shown in figure 9-5.

5.4. Digital Manometer (Electronic Pressure Measuring Device)

See the requirements of Section 4.1 above.

6. Calibration Requirements

6.1. A copy of the most current calibration of the electronic pressure measuring device shall be kept with the equipment.

6.2. All electronic pressure measuring devices shall be bench tested for accuracy using a reference gauge, incline manometer or National Institute of Standards and Technology (NIST) traceable standard at least once every twelve (12) consecutive months. Accuracy checks shall be performed at a minimum of five (5) points (e.g., 10, 25, 50, 75 and 90 percent of full scale) each for both positive and negative pressure readings. Accuracy shall meet the requirements of Section 4.

7. Determining UST Pressure

7.1. Pre-Test Procedure

7.1.1. Turn on digital manometer and allow instrument to warm up for five minutes.

7.1.2. Zero out digital manometer using adjustment pod on top of instrument in accordance with manufacturer's instructions. Drift may be minimized by re-zeroing immediately after use by venting both pressure ports to atmosphere until the display reads exactly zero.

7.1.3. If the Vapor Pressure Sensor is located at the vapor return line of the dispenser, attach the male quick connect fitting to the female quick connect fitting on the modified dust cap test assembly (see Figure 9-2).

7.1.4. If the Vapor Pressure Sensor is located at the vent stack, attach the male quick connect fitting to the female quick connect fitting on the vent stack test port (see Figure 9-5).

7.1.5. Attach digital manometer to open end of Tygon tubing.

7.1.6. If the Vapor Pressure Sensor is installed at the vapor return line of the dispenser, attach the dust cap or vapor coupler test assembly to the Phase I vapor adaptor (see Figure 9-2).

7.2. Test Procedure

7.2.1. If the headspace of the underground storage tank is under a vacuum of greater than negative five (-5) inches water column (i.e. -6, -7, -8, etc.), the vacuum should be relieved to a value between negative five and negative two inches water as described in Section 3.2 above.

7.2.2. On the TLS Console front panel, use the 'mode key' to scroll to "DIAG MODE" then use the function and step keys, as show in Figure 9-4 to view the current pressure value.

7.2.3. Simultaneously record the ullage pressure value from the digital manometer and the TLS Console. Record the above information on Form 1 "Data Form for Vapor Pressure Sensor UST Pressure Test." Districts may require the use of an alternate form, provided it includes the same minimum parameters as identified in the Data Form.

NOTE: The vapor pressure sensor value observed at the TLS console is refreshed at the frequency defined in Table 9-1. Prior to simultaneously recording the values observed at the digital manometer and the TLS console, the technician should wait until the value at the TLS console is refreshed.

7.2.4. Verify that the pressure reading from the TLS Console is within ±0.2 inches WC from the digital manometer reading. If difference is not within ±0.2 inches WC, the pressure sensor is not in compliance with the pressure sensor requirements of Exhibit 2.

7.2.5. Press the <MODE> key to leave the 'CALIBRATE SMARTSENSOR' menu. Note: Do not calibrate the sensor!

8. Determining Ambient Pressure

8.1. Test Procedure for Testing Sensor Under Ambient Pressure

8.1.1. Access the Vapor Pressure Sensor, which is located on the vent stack or in the dispenser closest to the tanks. Record pressure sensor location and serial number on the data form.

8.1.2. Remove the cap from the ambient reference port of the Vapor Pressure Sensor valve and open the valve to atmosphere by turning it 90 degrees so that the flow arrows point to both the Vapor Pressure Sensor sensing port and the ambient reference port (see Figure 9-3).

8.1.3. On the TLS Console front panel, use the 'mode key' to scroll to "DIAG MODE" then use the function and step keys, as shown in Figure 9-4 to view the current pressure value.

8.1.4. Note: The vapor pressure sensor value observed at the TLS console is refreshed at the frequency defined in Table 9-1. Prior to simultaneously recording the values observed at the digital manometer and the TLS console, the technician should wait until the value at the TLS console is refreshed.

8.1.5. Verify that the pressure value is between +0.2 and -0.2 inches WC. If the pressure value is not within this range, the pressure sensor is not in compliance with the pressure sensor requirements of Exhibit 2.

8.1.6. Replace the cap on the ambient reference port of the Vapor Pressure Sensor valve. Restore the Vapor Pressure Sensor valve by turning it 90 degrees so that the flow arrows point to both the Vapor Pressure Sensor sensing port and the UST vapor space sensing line (see. Figure 9-3).

8.1.7. Press the <MODE> key to leave the ‘CALIBRATE SMARTSENSOR’ menu. Note: Do not calibrate the sensor!

8.1.8. Record the above information on Form 2 “Data Form for Vapor Pressure Sensor Ambient Reference Test.” Districts may require the use of an alternate form, provided it includes the same minimum parameters as identified in the Data Form.

9. Alternate Procedures

9.1. This procedure shall be conducted as specified. Any modifications to this test procedure shall not be used unless prior written approval has been obtained from the ARB Executive Officer, pursuant to Section 14 of CP-201.

FIGURE 9-1
Typical Modified Vapor Adaptor Dust Cap (Bottom View)

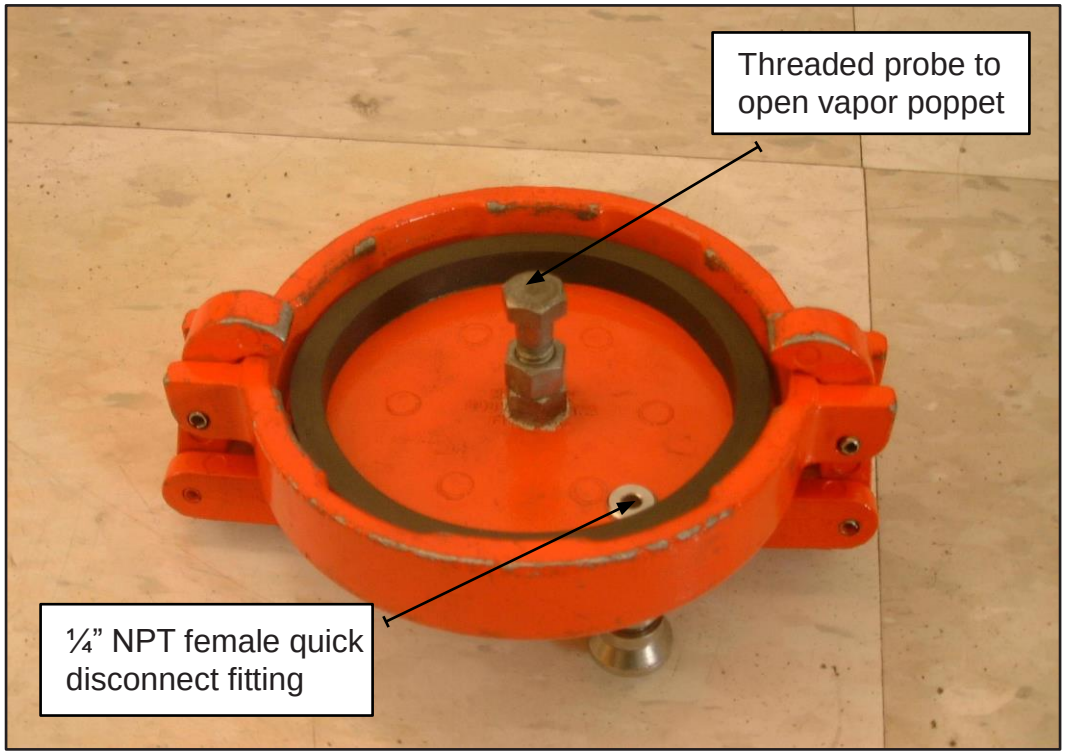

FIGURE 9-2
Typical Field Installation of UST Pressure Measurement Assembly

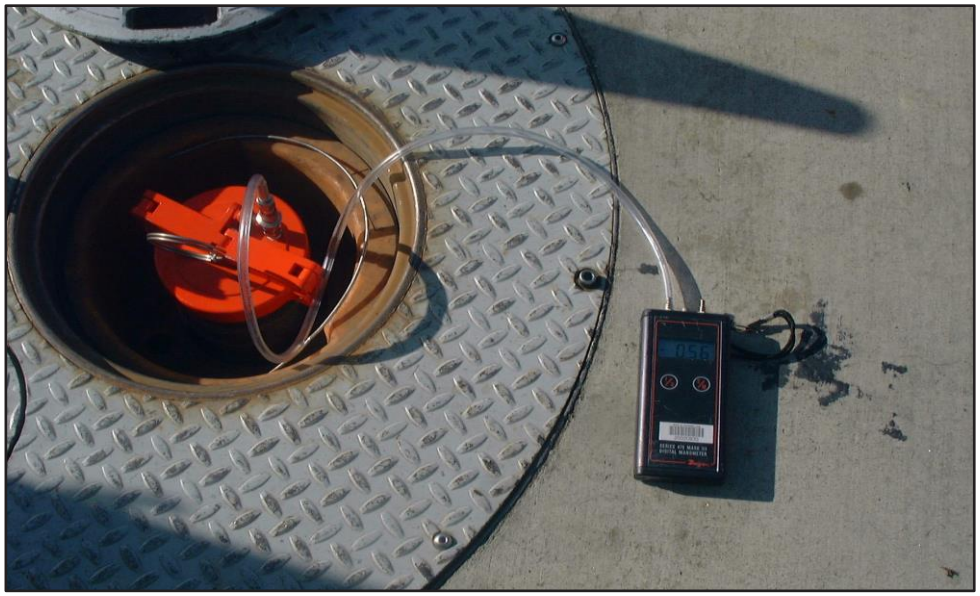

FIGURE 9-3
Vapor Pressure Sensor Valve Position

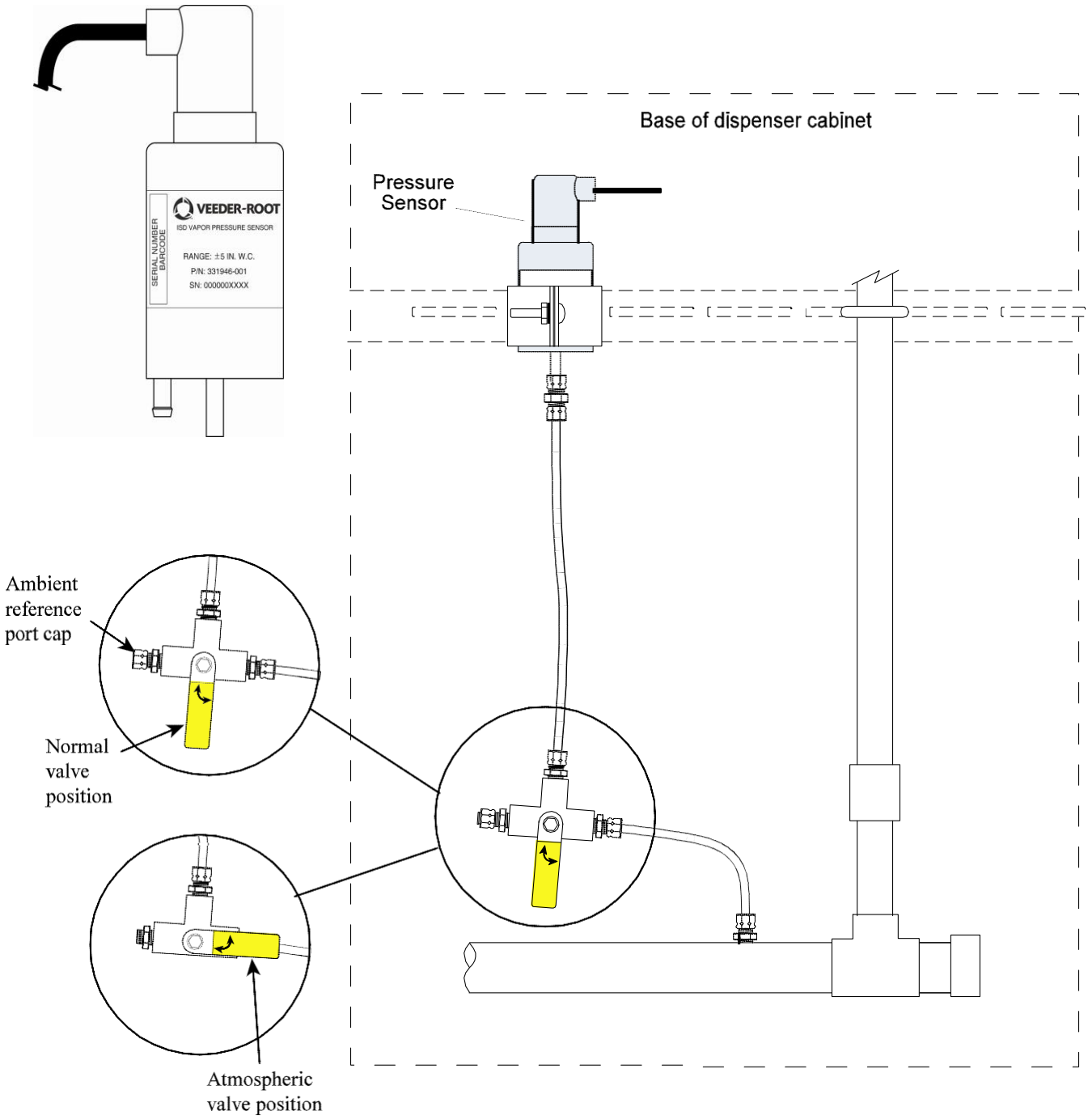

FIGURE 9-4
Accessing Calibrate SmartSensor Diagnostic Menu
for Vapor Pressure Sensor Reading

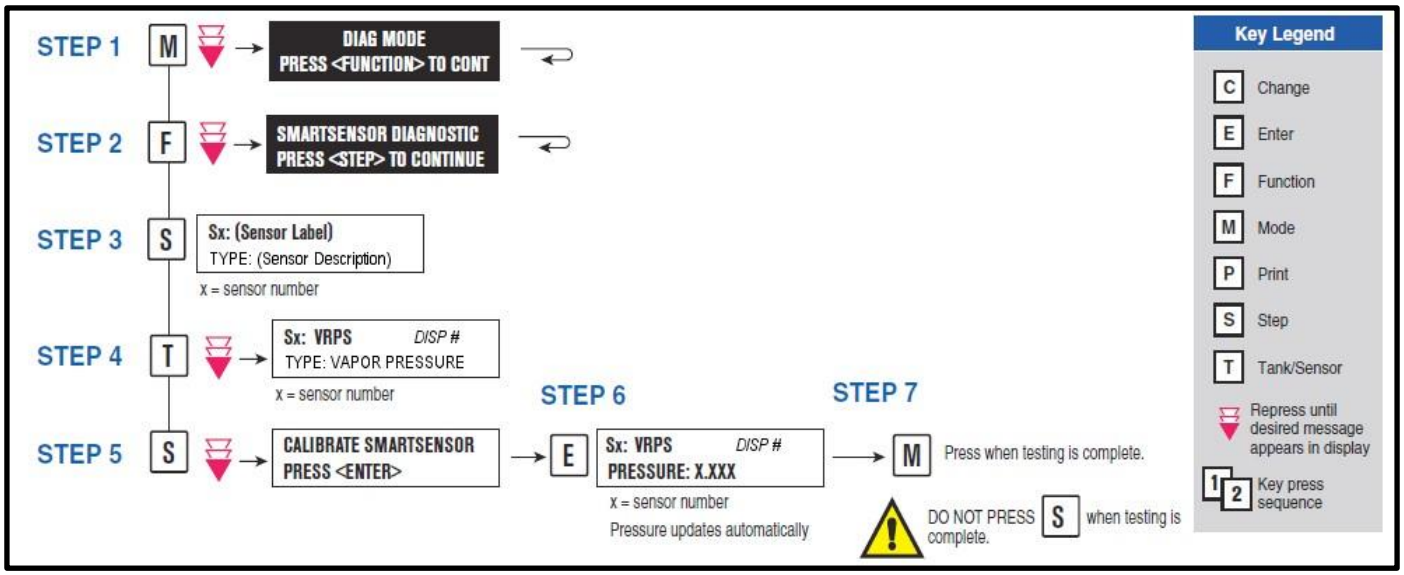

FIGURE 9-5
Vapor Pressure Sensor Vent Stack Test Port Configuration

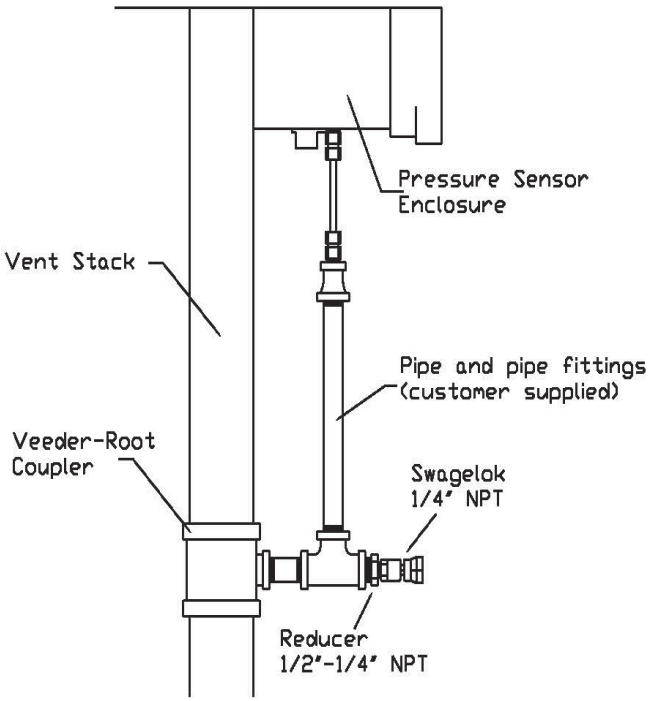

FORM 1

Data Form for Vapor Pressure Sensor UST Pressure Test

DATE OF TEST: _____

SERVICE COMPANY NAME	SERVICE COMPANY'S TELEPHONE
SERVICE TECHNICIAN	VEEDER-ROOT TECH CERTIFICATION # (as applicable) ICC or DISTRICT TRAINING CERTIFICATION (as applicable)
STATION NAME	DISTRICT PERMIT #
STATION ADDRESS CITY	STATE ZIP

PRESSURE SENSOR LOCATION: DISPENSER FUELING POINT (FP) or VENT STACK	FP #_____ ☐ VENT STACK ☐	PRESSURE SENSOR SERIAL NUMBER: _____

STEP 7.2.3	DIGITAL MANOMETER VALUE _____ inches WC
STEP 7.2.3	TLS CONSOLE SENSOR VALUE _____ inches WC (OBTAIN VALUE USING TLS CONSOLE KEYPAD SEQUENCE SHOWN IN FIG. 9-4, CALIBRATE SMARTSENSOR)
STEP 7.2.4	TLS Console Sensor Value within ±0.2 inches WC of Digital Manometer Value? ☐ Yes ☐ No IF NO: THE PRESSURE SENSOR IS NOT IN COMPLIANCE WITH THE PRESSURE SENSOR REQUIREMENTS OF EXHIBIT 2.
STEP 7.2.5	MODE KEY PRESSED TO EXIT THE CALIBRATE SMARTSENSOR MENU? ☐

FORM 2

Data Form for Vapor Pressure Sensor Ambient Reference Test

DATE OF TEST: _____

SERVICE COMPANY NAME	SERVICE COMPANY'S TELEPHONE
SERVICE TECHNICIAN	VEEDER-ROOT TECH CERTIFICATION # (as applicable) ICC or DISTRICT TRAINING CERTIFICATION (as applicable)
STATION NAME	DISTRICT PERMIT #
STATION ADDRESS CITY	STATE ZIP

PRESSURE SENSOR LOCATION: DISPENSER FUELING POINT (FP) or VENT STACK	FP #_____ ☐ VENT STACK ☐	PRESSURE SENSOR SERIAL NUMBER: _____

STEP 7.1.2	REFERENCE PORT CAP REMOVED?	☐
	VALVE SET TO AMBIENT REFERENCE PORT (PER FIG. 9-3)?	☐
STEP 7.1.3	NON-CALIBRATED SENSOR VALUE _____Inches WC (OBTAIN VALUE USING TLS CONSOLE KEYPAD SEQUENCE SHOWN IN FIG. 9-4, CALIBRATE SMARTSENSOR)	
STEP 7.1.4	PRESSURE BETWEEN +0.20 & -0.20?	☐ Yes ☐ No
	IF NO: THE PRESSURE SENSOR IS NOT IN COMPLIANCE WITH THE PRESSURE SENSOR REQUIREMENTS OF EXHIBIT 2.	
STEP 7.1.5	REFERENCE PORT CAP REPLACED?	☐
	VALVE SET TO NORMAL VALVE POSITION (PER FIG 9-3)?	☐
STEP 7.1.6	MODE KEY PRESSED TO EXIT THE CALIBRATE SMARTSENSOR MENU?	☐

Vapor Flow Meter Operability Test

1. Connect a notebook PC – See figure 5-9 of the ISD Install, Setup & Operation Manual. Run Veeder-Root's "ISD PC Setup Tool", v1.10 or higher, to the dedicated TLS serial port that is required for ISD reports access. Using the tool, access the individual fueling point "dispensing event ISD A/L" results as needed in this test procedure. These results are compared to the manually measured V/L's in the procedure. Training on use of the tool is provided as part of the Veeder-Root training program for ISD. A trained service technician must be present when performing this operation.

2. Select a dispenser and note the fueling point numbers on the data form. Obtain the vapor flow meter serial number (available from the EVR/ISD Setup Printout – see Figure 3-6 in the ISD Install, Setup & Operation Manual). Record the serial number on the data form.

3. Conduct a Assist EVR Phase II system V/L test per Exhibit 5 of VR-202-K with lowest grade fuel available on that dispenser to obtain a V/L result.

4. Obtain the corresponding ISD A/L value for that V/L test obtained from the TLS using the "ISD PC Setup Tool".

5. Compare the ISD A/L value for that dispenser hose to the V/L result (subtract V/L result from A/L value and note difference on the form).

6. Pass: If the difference is between -0.15 and +0.15, then the ISD A/L value is within +/- 0.15 of the V/L result. Circle "Pass" to document that the ISD flow meter in that dispenser passes and repeat the procedure beginning at Step 2 for the next dispenser.

7. Continue: If the ISD A/L value is NOT within +/- 0.15 of the V/L result, then go to Step 6.

8. Run two more V/L tests per Exhibit 5 with lowest grade fuel on the same hose and average the two results with the first V/L result from Step 3.

9. Obtain the corresponding two ISD A/L values from the TLS and average the two values with the first ISD A/L value from Step 4.

10. Compare the average of the 3 ISD values for that hose to the average of the 3 V/L results (subtract V/L average from A/L average and note difference on the form).

11. Pass: If the ISD A/L average is within +/- 0.15 of the average of the 3 V/L results, the ISD flow meter in that dispenser passes the operability test. Go to the next dispenser and repeat the procedure beginning at Step 2.

12. Continue: If the ISD A/L average is NOT within +/- 0.15 of the average of the 3 V/L test results, then go to Step 9.

13. If a second fueling position is available on the dispenser, repeat the tests beginning at Step 3 for the second fueling position. If the second fueling position tests do not pass Steps 3 through 8, then the flow meter is not in compliance with the requirements of Exhibit 2.

Site Shutdown Test

1. This test must be performed by a certified Veeder-Root contractor.

    1.1. Remove power from TLS console.

    1.2. Confirm power to submersible pumps is off by verifying that gasoline dispensing has been disabled.

    1.3. Restore power to TLS console.

Veeder-Root In-Station Diagnostics (ISD)

Vapor Flow Meter Operability Test Procedure (Page 1)

DATE OF TEST: _____

SERVICE COMPANY NAME	SERVICE COMPANY'S TELEPHONE
SERVICE TECHNICIAN	VEEDER-ROOT TECH CERTIFICATION #
STATION NAME	DISTRICT PERMIT #
STATION ADDRESS CITY STATE ZIP	

2.

STEP 2.	VAPOR FLOW METER SERIAL NUMBER _____		
	DISPENSER FUELING POINT NUMBERS	FP _____	FP _____
STEP 3.	LOW GRADE FUEL HOSE *V/L RESULT #1 (ONE FP ONLY)		
STEP 4.	ISD A/L VALUE #1 CORRESPONDING TO RESULT IN STEP 3		
STEP 5.	STEP 4. VALUE MINUS STEP 3. VALUE	DIFF.	DIFF.
	PASS IF DIFFERENCE IS WITHIN +/-0.15, IF LARGER DIFFERENCE, THEN CONTINUE TO STEP 6 (CIRCLE ONE)	PASS CONTINUE TO STEP 6	PASS CONTINUE TO STEP 6
STEP 6.	LOW GRADE FUEL HOSE V/L RESULT #2		
	LOW GRADE FUEL HOSE V/L RESULT #3		
	AVERAGE OF 3 V/L RESULTS	AVG.	AVG.
STEP 7.	ISD A/L VALUE #2		
	ISD A/L VALUE #3		
	AVERAGE OF 3 A/L VALUES	AVG.	AVG.

Veeder-Root In-Station Diagnostics (ISD)

Vapor Flow Meter Operability Test Procedure (Page 2)

DATE OF TEST: _____

STEP 8.	STEP 7. AVG MINUS STEP 6. AVG.	DIFF.		DIFF.
	PASS IF DIFFERENCE IS WITHIN +/-0.15, IF LARGER DIFFERENCE, THEN CONTINUE TO STEP 9.	PASS	CONTINUE TO STEP 9	
STEP 9.	IF CONTINUE, REPEAT AT STEP 3. FOR 2ND FP USING 2ND FP COLUMN, ABOVE.			

*Measure V/L using test procedure in Exhibit 5 of VR-202.

Veeder-Root In-Station Diagnostics (ISD)

Site Shutdown Test

DATE OF TEST: _____

SERVICE COMPANY NAME		SERVICE COMPANY'S TELEPHONE	
SERVICE TECHNICIAN		VEEDER-ROOT TECH CERTIFICATION #	
STATION NAME		DISTRICT PERMIT #	
STATION ADDRESS	CITY	STATE	ZIP

STEP 1.	POWER REMOVED FROM TLS CONSOLE?
STEP 2.	POWER TO SUBMERSIBLE PUMPS REMOVED BY TLS? (VERIFY GASOLINE FUELING DISABLED)
STEP 3.	POWER RESTORED TO TLS CONSOLE?

COMMENTS (INCLUDE DESCRIPTION OF REPAIRS MADE)

Exhibit 10
INCON VRM OPERABILITY TEST PROCEDURE

The following procedures shall be used at field sites to determine the operability of the INCON VRM system to satisfy the requirements documented in VAPOR RECOVERY CERTIFICATION PROCEDURE, CP-201, CERTIFICATION PROCEDURE FOR VAPOR RECOVERY SYSTEMS AT GASOLINE DISPENSING FACILITIES. Testing the VRM equipment in accordance with this procedure will verify the equipment's operability for Vapor Containment Monitoring and Vapor Collection Monitoring.

The INCON Vapor Recovery Monitoring system uses Self Testing functions to verify the proper selection, setup, and operation of the console modules and sensors. Upon a detection of a failed module or sensor, the VRM system will follow the assessment period alarming sequencing for the particular device and will shutdown the dispenser(s).

- Vapor Flow Meter or Probe Module Failure will issue a Daily A/L Warning/Failure after day 1 and 2. A shutdown of the dispenser will follow day 2.
- A Vapor Pressure Sensor or 4-20mA Module failure will follow the Weekly Pressure Monitoring Warning/Failure after week 1 and 2. A shutdown of all the dispensers will follow week 2.
- A shutdown of the console, incorrect setup mapping of sensors, or failure of Console Modules not listed above will not complete test or report passing test results.

Franklin Fueling recommends printing a copy of the VRM DAILY report and viewing the VRM STATUS page on either the touch-screen display or web page periodically to determine that compliance tests are being completed in accordance with local and state regulations.

A step-by-step worksheet for recording data from the following operability tests is provided at the end of this Exhibit.

VRM Operability Testing

The Vapor Recovery Monitoring (VRM) Operability Testing procedures are intended to assist the installer with verifying all the vapor recovery equipment is functioning and operational.

Upon finishing an installation of an INCON VRM System, a certified technician will need to run the procedures listed in Section 2 below.

Note: The following procedures and checks are only related to the INCON VRM system; see the Executive Order for all inspections and test required for all certified equipment.

Procedures for after Installation or major Upgrade:

1. Active Alarm Check and Printout
2. Dispenser Shutdown Test
3. Vapor Flow Meter A/L Check
4. Vapor Pressure Sensor Ambient Test

Active Alarm Check and Printout

The purpose of checking the active alarm list is to see if there are any current alarms in the system. If there are then these issues may need to be corrected before running any operability tests.

To check the active alarm list, look to see if the alarm icon on the LCD of the Console is showing a Check Mark or Exclamation Point. If the Alarm icon is showing a Check Mark as shown below, then there are no active alarms. If there is an Exclamation Point Icon showing then press the icon to view the alarms. At this point a printout of the alarms can be done by pressing the Print Icon.

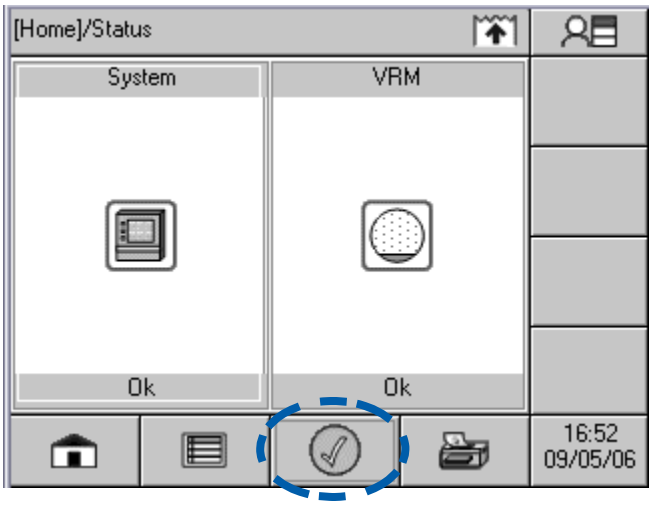

External ATG Connection Alarm Test (if not using internal inventory probes)
An External Automatic Tank Gauge (ATG) Connection Alarm Test will verify the proper setup to the External ATG. Use the following instructions to do the External ATG Connection Check.

Tools Needed

- No tools are required for this test

1. Disconnect the serial cable from either the External ATG or the INCON Vapor Recovery Monitoring system.
2. Verify the alarm “External ATG Connection” is generated within one minute. See Figure to the right. Also verify the Yellow LED is now Flashing.
3. Re-connect the serial cable.
4. Re-run the **Active Alarm Check and Printout** procedure. Note it may take up to one minute for the alarm to clear. Verify the Yellow LED goes OFF.

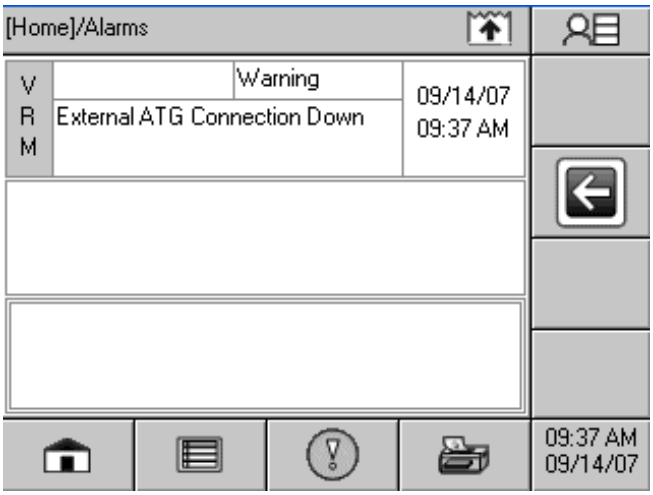

Dispenser Shutdown Mapping Verification

This is a procedure to test the shutdown feature of the INCON VRM System. The purpose is to verify the dispenser mapping for proper shutdown.

This procedure can be done from either the touch-screen or the web page.

Dispenser Shutdown Test via Touch Screen Display:

1. Navigate to the dispenser status page by the following steps (see Figure 10-1):
   a. Selecting the VRM Application icon
   b. Selecting the Sub-menu icon
   c. Selecting the Control icon
   d. You should see this screen

FIGURE 10-1 – Steps to Shutdown and Re-enable a Dispenser

Step A

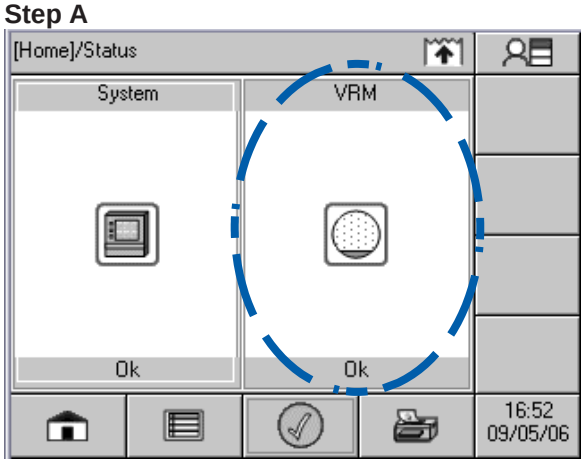

Step B

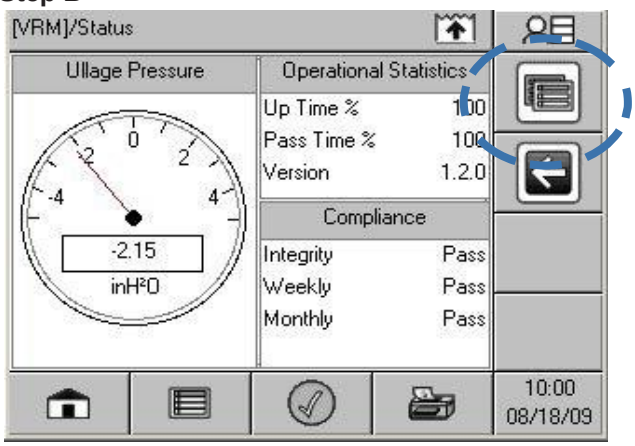

Step C

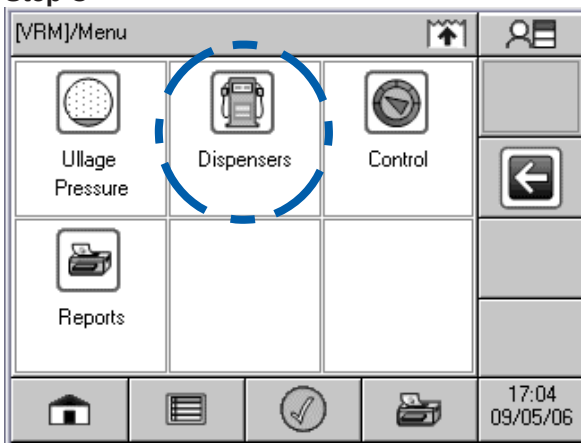

Step D

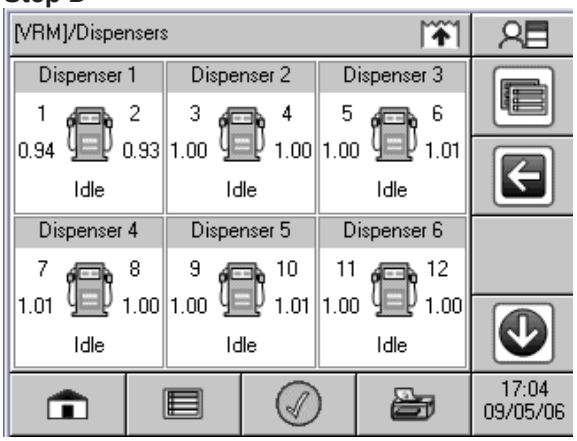

2. Once at the Dispenser Status page, if you touch one of the dispenser icons, a message will ask you if you want to disable that dispenser. If you press the OK button then the dispenser will shutdown.

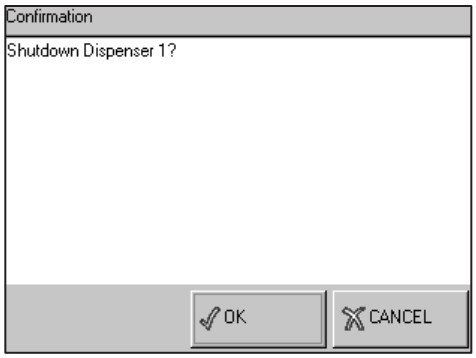

3. Verify the Dispenser under test is disabled and fuel cannot be pumped. From the Dispenser Status page, the dispenser under test should show “Shutdown”. See picture to right.

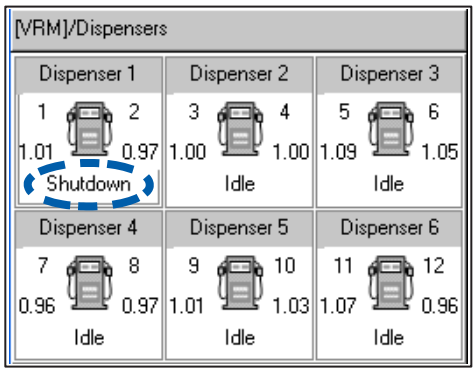

4. Once verified, if you press the same Dispenser again, a message will ask if you want enable Dispenser 1. Select “Yes” and the dispenser should come back to normal operation.

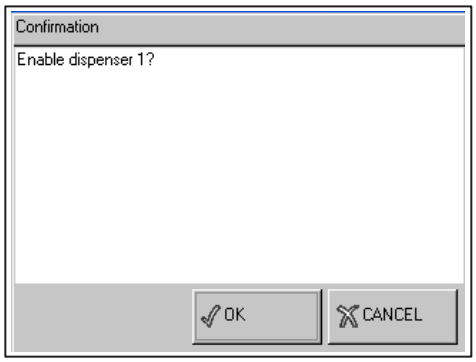

5. If the Dispenser under test did not shutdown or the wrong dispenser shutdown, then the wiring and setup should be checked and Steps 1 - 4 run again.

6. Repeat Steps 1 - 5 for all dispensers and record the results in the Test Form.

Dispenser Shutdown Test via Web Pages

The dispenser shutdown test can alternatively be run through the web pages. The following procedure can be done from either the LCD or the web page. From the Web Page:

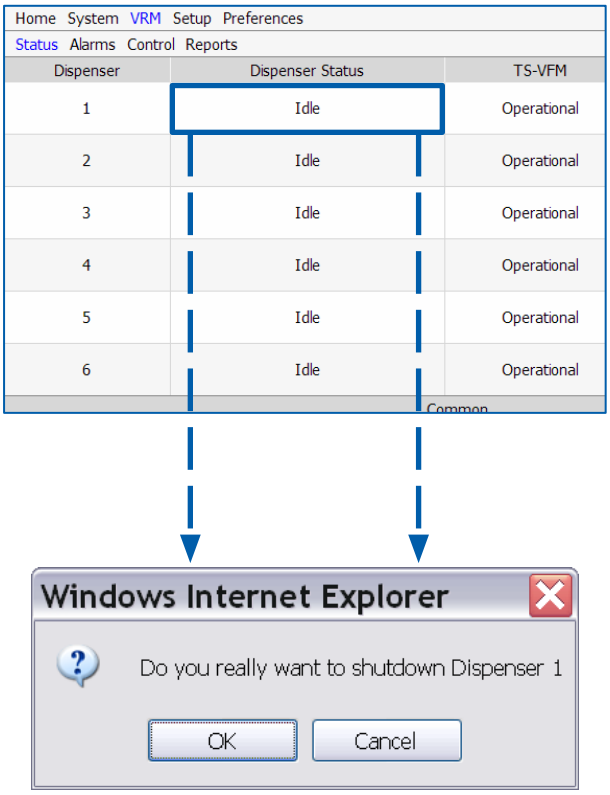

1. This procedure requires administrator privileges.
2. Navigate to the dispenser status page. http://Ip_address/vrm_status.html
3. In the **Dispenser Status** column, select the Dispenser under test. A message will appear asking if you want to disable the dispenser, click “OK”.
4. Verify the Dispenser under test is disabled and fuel cannot be pumped. From the Dispenser Status page, the dispenser under test should show “Shutdown”.
5. Once verified, if you press the same Dispenser again, a message will ask if you want enable Dispenser 1. Select “Yes” and the dispenser should come back to normal operation.
6. If the Dispenser under test did not shutdown or the wrong dispenser was shutdown, then the wiring and setup should be checked and Steps 1 - 4 run again.
7. Repeat Steps 1 - 5 for all dispensers and record the results in the Test Form.

Vapor Flow Meter V/L Check (Assist)

To verify the Vapor Flow Meters (VFM) is operating correctly, a technician will need to run the TP-201.5 as listed in the executive order.

Note 1: Only one fueling point/hose is needed to verify each VFM.

Follow this procedure to validate the INCON VFM is within proper range of a reference measurement. Fill out the INCON VRM Operability Test Form as required. These procedures must be run for each VFM. When generating a V/L on a fueling point/hose, be sure to stop dispensing from the opposite side of the dispenser. Other dispensers may be allowed to run normally.

1. Beginning at the first dispenser, run a V/L per Exhibit 5 of Executive Order VR-202-P.
   a. Record on the Test Form the V/L value from the reference test fixture.
   b. Record on the Test Form the V/L value from the INCON Console.
      This value is located on the Dispenser Status page, refer to Figure 10-1 to navigate to that screen. This status page will show the last V/L run for each fueling point/hose. Note that the very next fueling transaction on the same fueling point/ hose will overwrite the screen V/L value.
   c. Subtract the V/L value from Steps A and B and record the difference on the Test Form.
2. Is the value from Step c less than -0.15 or greater than +0.15? If yes, then proceed to the next step. Otherwise, the test passes.
3. Following Exhibit 5, run an additional two V/Ls.
   d. Record on the Test Form the two V/L values from the reference test fixture.
   e. Calculate the average of the three V/L values from the reference fixture.
   f. Record on the Test Form the two V/L values from the INCON Console.
   g. Calculate the average of the three V/L values from the INCON Console.
   h. Subtract the average V/L value of Step E from Step G.
4. Is the value from Step H less than -0.15 or greater than +0.15? If yes, then proceed to the next step. Otherwise, the test passes.
5. Repeat this procedure, beginning at Step 1 through 4 for the fueling point/hose on the opposite side of this dispenser. If the second fueling point/hose does not pass, then proceed to the next step.
6. Run the A/B Sheet vacuum (Healy VP1000 vacuum pump) test to confirm dispenser piping tightness (Side B, Step 3). If the tightness test fails then make the proper repairs and repeat steps the above 1 through 4. If the tightness test passes then proceed to next step.
7. Authorize the dispenser for fueling and close the ball valve at the pump inlet. The VP1000 should begin to run but do not dispense any fuel. Look into the site glass indicator on the side of the Vapor Flow Meter and verify the indicator is not spinning. If the indicator is spinning then there may be leak between the Healy Ball Valve and the Vapor Flow Meter. Make necessary repairs and repeat Steps 1 through 4. If the indicator is not spinning then the Vapor Flow Meter does not comply with Exhibit 2.

Vapor Pressure Sensor Verification Test procedure

1. Purpose and Applicability

1.1 The purpose of this test procedure is to determine if the INCON ISD System Vapor Pressure Sensor (listed in Exhibit 1) is operating in accordance with the vapor pressure sensor requirements of Exhibit 2. This procedure is used:

1.1.1 To determine whether the Vapor Pressure Sensor complies with the performance specification when the sensor is exposed to ambient pressure.

1.1.2 To determine the measured ullage pressure in underground gasoline storage tanks (USTs) installed at gasoline dispensing facilities (GDFs) equipped with a Assist Phase II Enhanced Vapor Recovery system with Clean Air Separator (CAS) Including INCON ISD and compare to the pressure reading of the INCON ISD System at the Vapor Recovery Monitoring (VRM) console.

1.2 This procedure is applicable for compliance testing.

2. Principle and Summary of Test Procedure

Determining Ambient Pressure - The Vapor Pressure Sensor (VPS) is subjected to ambient pressure by turning the Vapor Pressure Sensor valve, which is located in the dispenser closest to the tanks, to the Atmospheric Valve Position as shown in Figure 10-2. This test can be performed while product is being dispensed into motor vehicles.

Determining UST Pressure - The pressure of the Underground Storage Tank (UST) is determined at the Phase I vapor recovery adaptor (dry break assembly) with a vapor coupler test assembly as shown in Figures 2 and 3 of TP-201.3 (*Determination of 2 Inch WC Static Pressure Performance of Vapor Recovery Systems of Dispensing Facilities*) or a modified dust cap test assembly as shown in Figures 10-1a and 10-1b of this exhibit. The test assembly is equipped with a center probe, which opens the dry break, and a quick connect fitting that is connected to an electronic pressure measuring device or digital manometer. The test assembly should open the dry break with minimal venting of the USTs. This test can be performed while product is being dispensed into motor vehicles.

3. Biases and Interferences

3.1 This test shall not be conducted within 30 minutes following gasoline transfer from a cargo tank.

3.2 This test shall not be conducted if the system ullage pressure is less than negative eight (-8.0) inches WC or greater than positive eight (+8.0) inches WC.

4. Range and Accuracy

Digital Manometer (Electronic Pressure Measuring Device)

Minimum readability shall be 0.01 inches WC with measurement range(s) to include at least up to positive and negative ten (±10) inches WC with a minimum accuracy of plus or minus 0.05 inches WC of full scale.

5. Equipment

5.1 The dust cap test assembly shall be modified in the following manner:

5.1.1 Install a probe in the center of the dust cap as shown in Figure 10-1a (one method is to tap and thread probe). The probe shall be of sufficient length to open approximately ½ inch of the dry break while allowing the cap to maintain a leak tight seal on the adaptor.

5.1.2 Install female quick connect fitting on the top of the dust cap, offset from the center probe as shown in Figure 10-1a. A Swagelok, part number SS-QC4-B-4-PM, quick connect fitting or equivalent can be used.

5.1.3 Use “Tygon tubing” or equivalent to connect the manometer to the dust cap (Figure 10-1b). Install a male quick connect fitting (Swagelok part number SS-QC4-5-400 or equivalent can be used) on one end of a ferrule stainless steel tube (or equivalent material). Connect one end of the “Tygon tubing” to the stainless steel tube and connect the other end to the digital manometer (Figure 10-1b).

5.2 Alternatively, the vapor coupler test assembly, Figures 2 and 3 of TP-201.3 may be used in lieu of the dust cap test assembly.

5.3 Digital Manometer (Electronic Pressure Measuring Device)

Use a minimum range ±10.00 inches WC digital manometer to monitor the UST pressure with a minimum readability of 0.01 inches of WC. Dwyer Series 475 Mark III Digital manometer or equivalent can be used. A copy of the manufacturer's operating instructions shall be kept with the equipment.

6. Digital Manometer Calibration Requirements

6.1 A copy of the most current calibration of the digital manometer shall be kept with the equipment.

6.2 All digital manometers shall be bench tested for accuracy using a reference gauge, incline manometer or National Institute of Standards and Technology (NIST) traceable standard at least once every twelve (12) consecutive months. Accuracy checks shall be performed at a minimum of five (5) points (e.g., 10, 25, 50, 75 and 90 percent of full scale) each for both positive and negative pressure readings. Accuracy shall meet the requirements of Section 3.2 of TP-201.3.

7. Pre-Test Procedure

7.1 Turn on digital manometer and allow instrument to warm up for five minutes.

7.2 Zero out digital manometer using adjustment pod on top of instrument in accordance with manufacturer's instructions. Drift may be minimized by re-zeroing immediately after use by venting both pressure ports to atmosphere and adjusting the knob until the display reads exactly zero.

7.3 Attach the male quick connect fitting to the female quick connect fitting on the modified vapor dust cap.

7.4 Attach digital manometer to open end of Tygon tubing.

<u>Determining Ambient Pressure</u>

8. Test Procedure for Testing the INCON ISD System Vapor Pressure Sensor at Ambient Pressure

8.1 Access the INCON ISD System Vapor Pressure Sensor, which is located in the dispenser closest to the USTs. Record the Vapor Pressure Sensor location and serial number on the INCON VRM Startup Test Form 1 and 2.

8.2 Turn the Vapor Pressure Sensor ball valve to the closed position. This isolates the Vapor Pressure Sensor from the UST ullage space (see Figure 10-2).

8.3 Remove the plug from the Vapor Pressure Sensor ball valve (see Figure 10-2).

8.4 Verify on the VRM Status on the LCD of the console that the pressure value is zero inches WC, ±0.20 inches WC.

If the vapor pressure sensor is within ±0.2 inches WC of zero, proceed to Section 8.5 of this exhibit.

If the pressure value is not within ±0.2 inches WC of zero, the vapor pressure sensor will need to be calibrated. Proceed to section 8.4.1-8.4.3.

8.4.1 On the LCD of the console, go to the VRM Control page, refer to Figure 10-3, and perform the following steps

a. Press the CONTROL icon. This allows access to the control menu screen.
b. Press the CALIBRATE ZERO OFFSET icon.
c. Press anywhere in the upper calibration box. Select “Yes” to calibrate the sensor. This will zero the pressure reading for atmospheric pressure.

8.4.2 Verify on the VRM Status page that the pressure value is now reading zero (0.0) inches WC, ±0.20 inches WC.

8.4.3 If the pressure reading from the INCON VRM Console is NOT within ±0.2 inches WC from zero, **the Vapor Pressure Sensor is not in compliance with the pressure sensor requirements of Exhibit 2.** Proceed to the INCON ISD System trouble shooting manual available on the Franklin Fueling Systems website.

8.5 Record the above information on Form 1 Section A-1 data form for "Vapor Pressure Sensor Ambient Reference Test.” Districts may require the use of an alternate form, provided it includes the same minimum parameters as identified in the Data Form.

8.1 Reinstall the plug on the Vapor Pressure Sensor ball valve. Turn the ball valve handle to the “normal position” (See Figure 10-2).

Determining UST Pressure

9. Test Procedure for Testing the INCON ISD System Vapor Pressure Sensor at UST Pressure

9.1 Attach the dust cap or vapor coupler test assembly to the vapor adaptor (Figure 10-1b).

9.2 On the touch-screen display at the INCON VRM console, go to the *VRM»Status* page.

9.3 Simultaneously record the ullage pressure from the digital manometer (connected to the vapor coupler test assembly) and the INCON VRM Console. Record the above information on Form 2, Section A-2 data form for "Vapor Pressure Sensor UST Pressure Test." Districts may require the use of an alternate form, provided it includes the same minimum parameters as identified in the Data Form.

9.4 Verify the vapor pressure sensor reading from the INCON VRM Console is within ±0.2 inches WC from the digital manometer reading. If difference is not within ±0.2 inches WC, **the Vapor Pressure Sensor is not in compliance with the pressure sensor requirements of Exhibit 2.** Proceed to the INCON ISD System trouble shooting manual available on the Franklin Fueling Systems website.

10. Alternate Procedures

This procedure shall be conducted as specified. Any modifications to this test procedure shall not be used unless prior written approval has been obtained from the ARB Executive Officer, pursuant to Section 14 of CP-201.

FIGURE 10-1a
Typical Modified Vapor Adaptor Dust Cap (Bottom View)

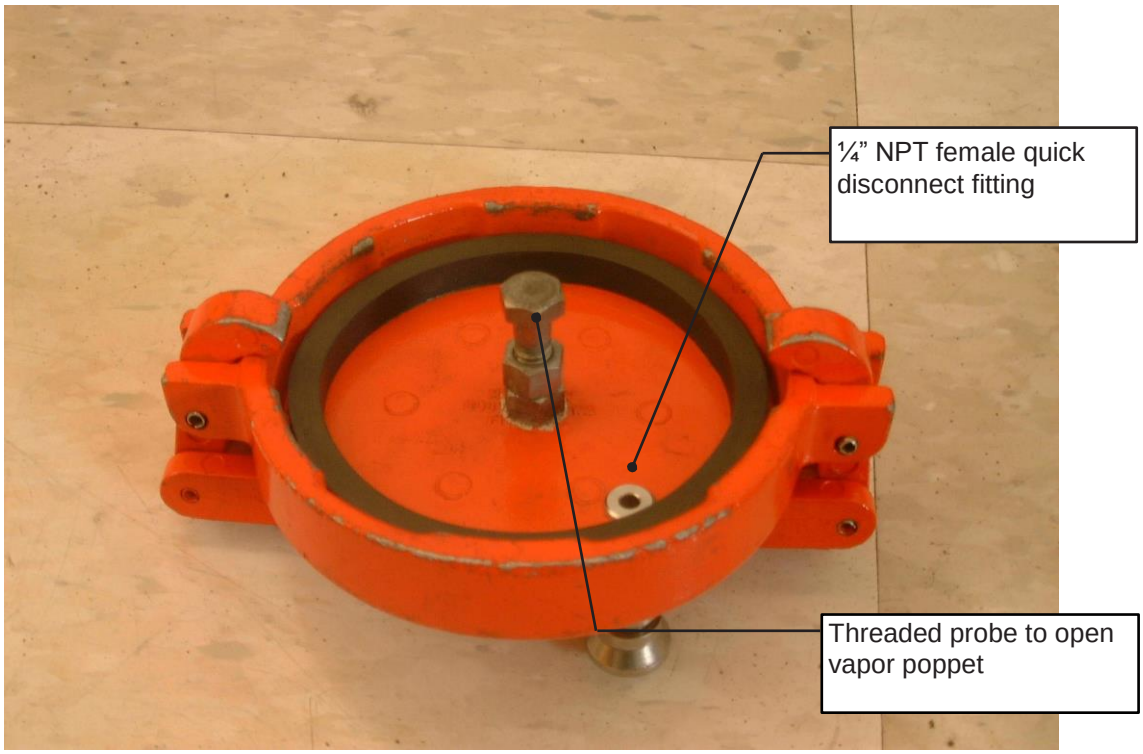

FIGURE 10-1b
Typical Field Installation of UST Pressure Measurement Assembly

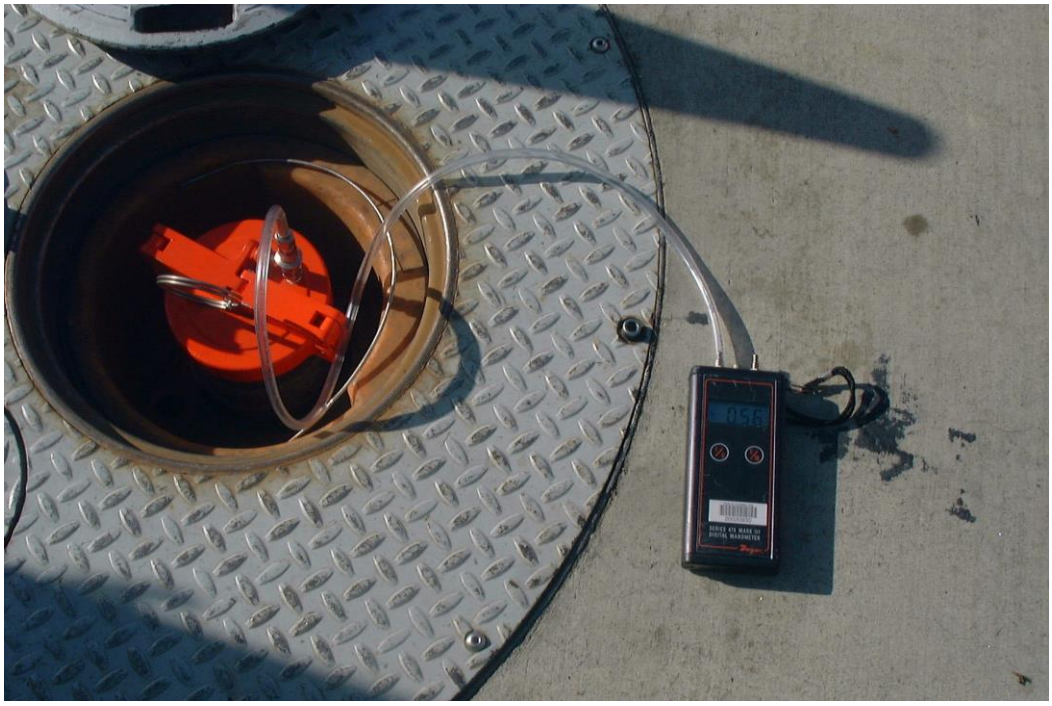

FIGURE 10-2
Vapor Pressure Sensor Test Port

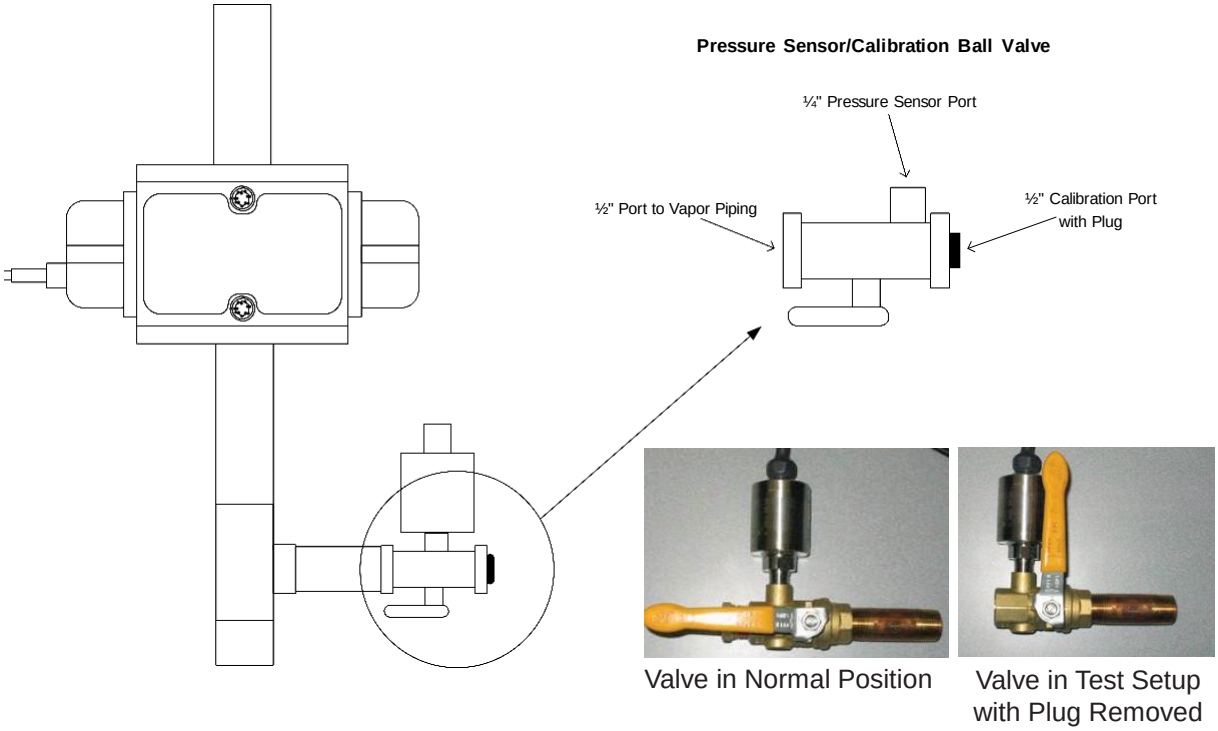

FIGURE 10-3
Steps to Calibrate the Vapor Pressure Sensor

Step A

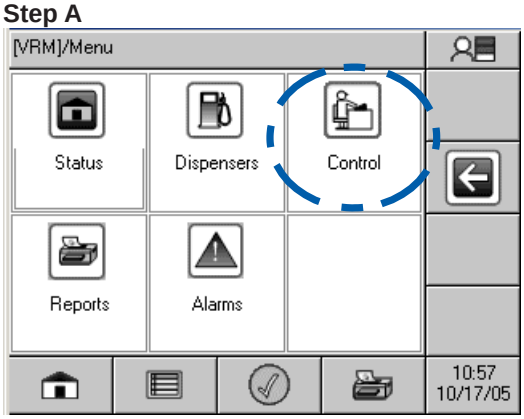

Step B

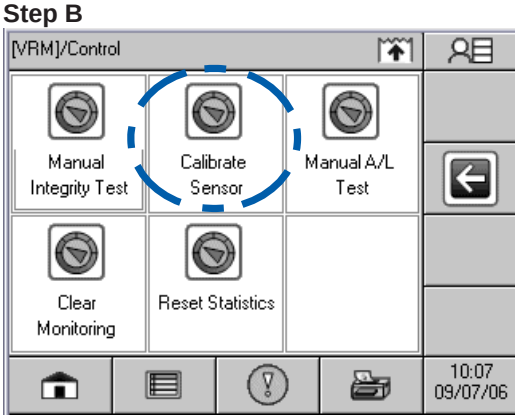

Step C

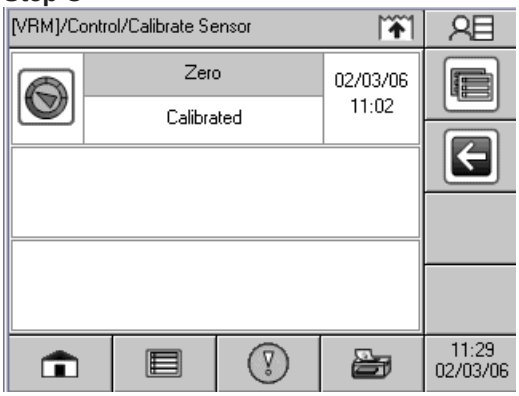

Calibrate Pressure Sensor Web Page View

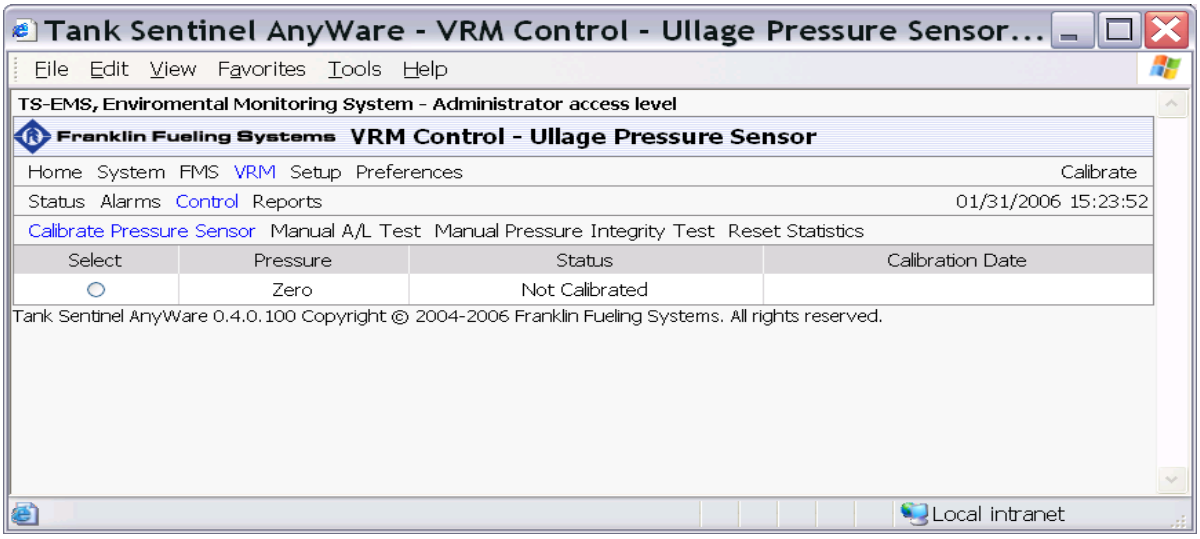

START-UP/NEW INSTALLATION FORM
INCON VAPOR RECOVERY MONITORING SYSTEM

DATE: _____

BOTH SIDES OF THIS TEST FORM MUST BE COMPLETED FOR ALL NEW INSTALLATIONS

INCON VRM Startup Test Form 1

Service Company Name	Serivce Company's Telephone Number	
Service Technician	INCON Tech Cert # (as Applicable)	ICC or District Training Cert (as Applicable)
Station Name	District Permit #	
Station Address	City	

Dispenser Number	Pressure Sensor Location:	Vapor Pressure Sensor Serial #

Vapor Pressure Sensor Ambient Reference Test			Check	Initials
A-1	Refer to the Vapor Pressure Sensor Ambient Reference Test procedures in this Exhibit.			
	STEP 8.3	Vapor pressure sensor ball valve plug removed?		
		Valve set to ambient reference position (Per to Fig. 2)?		
	STEP 8.4	Ambient pressure sensor Value_____Inches WC (Obtain Pressure Value From the VRM Status on the LCD of the console)		
		Calibration port plug is installed and the ball valve is open?		
		Is the Pressure Between +0.20 & -0.20? If NO, the vapor pressure sensor may need to be calibrated. To Calibrate pressure sensor, refer to section 8.4.1 of the vapor pressure sensor test procedure.	Yes / No	
		After successfully completing vapor pressure sensor calibration		
		Is the Pressure Between +0.20 & -0.20? If NO, the vapor pressure sensor is not in compliance with the pressure sensor requirements of Exhibit 2. Proceed to the INCON ISD system troubleshooting manual available on the Franklin Fueling Systems website.	Yes / No	
	STEP 8.5	Vapor pressure sensor ball valve plug removed?		
		Valve set to ambient reference position (Per to Fig. 2)?		

START-UP/NEW INSTALLATION FORM
INCON VAPOR RECOVERY MONITORING SYSTEM

DATE: _____

BOTH SIDES OF THIS TEST FORM MUST BE COMPLETED FOR ALL NEW INSTALLATIONS

INCON VRM Startup Test Form 2

Service Company Name	Service Company's Telephone Number	
Service Technician	INCON Tech Cert # (as Applicable)	ICC or District Training Cert (as Applicable)
Station Name	District Permit #	
Station Address	City	

Dispenser Number	Pressure Sensor Location:	Vapor Pressure Sensor Serial #

Vapor Pressure Sensor UST Pressure Test			Check	Initials
A-2	Refer to the Vapor Pressure Sensor Ambient Reference Test procedures in this Exhibit.			
	STEP 9.3	UST pressure digital manometer value_____Inches WC		
		UST pressure from INCON ISD system VRM console_____Inches WC (Obtain Pressure Value From the VRM Status on the LCD of the console)		
	STEP 9.4	VRM Console sensor value within Is the pressure between ± 0.20 inches WC of Digital Manometer Value? If NO, the vapor pressure sensor is not in compliance with the pressure sensor requirements of Exhibit 2. Proceed to the INCON ISD system troubleshooting manual available on the Franklin Fueling Systems website.	Yes / No	

External ATG Connection Check		Check	Initials
A-3	Refer to the External ATG Connection Alarm Test procedure in this Exhibit.		
	1. Serial Cable between External ATG and INCON Console was disconnected?		
	2. “External ATG Connection” alarm was generated? Yellow LED Flashing?		
	3. Serial Cable between External ATG and INCON Console was reconnected?.		
	4. “External ATG Connection” alarm has cleared? Yellow LED is OFF?		

START-UP/NEW INSTALLATION FORM
INCON VAPOR RECOVERY MONITORING SYSTEM

DATE: _____

BOTH SIDES OF THIS TEST FORM MUST BE COMPLETED FOR ALL NEW INSTALLATIONS
EACH DISPENSER/VFM MUST HAVE A SEPARATE COPY OF THIS SIDE

INCON ISD Operability Test Form

Service Company Name	Telephone Number
Service Technician	INCON Tech Cert #
Station Address	City
Dispenser Number	Vapor Flow Meter Serial #

Dispenser Mapping Test		Check	Initials
B-1	Refer to the Dispenser Shutdown Mapping Verification section of the ISD Operability Test Procedure.		
	Dispenser was shutdown properly?		
	Fuel was unable to be dispensed from nozzles?		
	Dispenser was re-enabled from console?		
	Fuel is able to be dispensed from nozzles?		

Vapor Flow Meter A/L Check		Yes/No	Initials
B-2	Refer to the Vapor Flow Meter V/L Check section of this ISD Operability Test Procedure. **Note 1**: This procedure is only required to be done on one fueling point/hose per dispenser.		
	1. Record the V/L from the test fixture and from the INCON VRM System. a. V/L Value from Test Fixture: b. V/L Value from ISD VRM: c. Difference between Steps A and B:	 _____ _____ _____	
	2. Is the value of Step C greater than +0.15 or less than -0.15? If YES, then proceed to Step 3, otherwise the check passes.		
	3. Re-run the V/L test with the Air Inlet of the test fixture closed off. d. V/L Value # 2 from Reference: V/L Value # 3 from Reference: e. Average V/L from Reference: f. V/L Value # 2 from VRM Console: V/L Value # 3 from VRM Console: g. Average V/L from VRM Console: h. Difference between Steps E and G:	 _____ _____ _____ _____ _____ _____ _____	
	4. Is the value from Step H less than -0.15 or greater than +0.15? If YES, then proceed to the next step. Otherwise, the test passes.	_____	
	1. Repeat this procedure, beginning at Step 1 through 4 for the fueling point/hose on the opposite side of this dispenser. if the second fueling point/hose does not pass, then proceed to the next step.	_____	
	2. Run the A/B Sheet vacuum (Healy VP1000 vacuum pump) test to confirm dispenser piping tightness (Side B, Step 3). If the tightness test fails then make the proper repairs and repeat steps the above 1 through 4. If the tightness test passes then proceed to Step 6.	_____	
	3. Authorize the dispenser for fueling and close the ball valve at the pump inlet. The VP1000 should begin to run but do not dispense any fuel. Look into the site glass indicator on the side of the Vapor Flow Meter and verify the indicator is not spinning. if the indicator is spinning then there may be leak between the Healy Ball Valve and the Vapor Flow Meter. Make necessary repairs and repeat Steps 1 through 4. If the indicator is not spinning then the Vapor Flow Meter doest not comply with Exhibit 2	_____	

Executive Order VR-202-R
Assist Phase II EVR System
Including In-Station Diagnostic (ISD) Systems

Exhibit 11
LIQUID CONDENSATE TRAP COMPLIANCE TEST PROCEDURE

Definitions common to all certification and test procedures are in:

D-200 Definitions for Vapor Recovery Procedures

For the purpose of this procedure the term "ARB" refers to the California Air Resources Board, and the term "Executive Officer" refers to the ARB Executive Officer or his or her authorized representative or designate.

1. PURPOSE AND APPLICABILITY

This procedure is used to verify the automatic evacuation of the Liquid Condensate Trap (LCT), the Liquid Sensor Alarm, as well as Visual and Audible Alarm. This procedure provides a method to determine compliance with the LCT requirements specified in ARB Executive Order VR-202 and any subsequent amendments or revisions.

2. PRINCIPLE AND SUMMARY OF TEST PROCEDURE

This test procedure provides a method to determine the compliance of LCTs. Gasoline is added to the LCT until the Liquid Sensor activates an alarm. The gasoline in the LCT is then allowed to be evacuated until the Liquid Sensor Alarm has cleared.

3. BIASES AND INTERFERENCES

3.1. There shall be no Phase I deliveries to the gasoline underground storage tank (UST) while performing this test.

3.2. To ensure that the gasoline level is below the vapor tube on the side of the Turbine Pump the gasoline level in the UST (connected to the LCT) shall be below its ninety percent (90%) capacity level.

3.3. If Veeder-Root's "Maintenance Tracker" is installed and enabled, access to the "diagnostic mode" and "set-up mode" of the TLS Console is prohibited unless a Maintenance Tracker Technician Key or personal computer equipped with Veeder-Root's ISD Setup Tool Software Version 1.09 or higher is made available. Maintenance Tracker is an optional security device designed to prevent unauthorized tampering and clearing of Veeder-Root tank monitoring and ISD alarms. Maintenance Tracker resides within the TLS console and when enabled, a message will appear on the two line display of the TLS console. For additional instructions on how to access the desired parameters to complete this test procedure, see Exhibit 12; "Veeder-Root Maintenance Tracker (Optional)".

4. EQUIPMENT

5 gallon gasoline container and funnel or other method of pouring gasoline into the LCT.

Figure 11-1
Typical Configuration

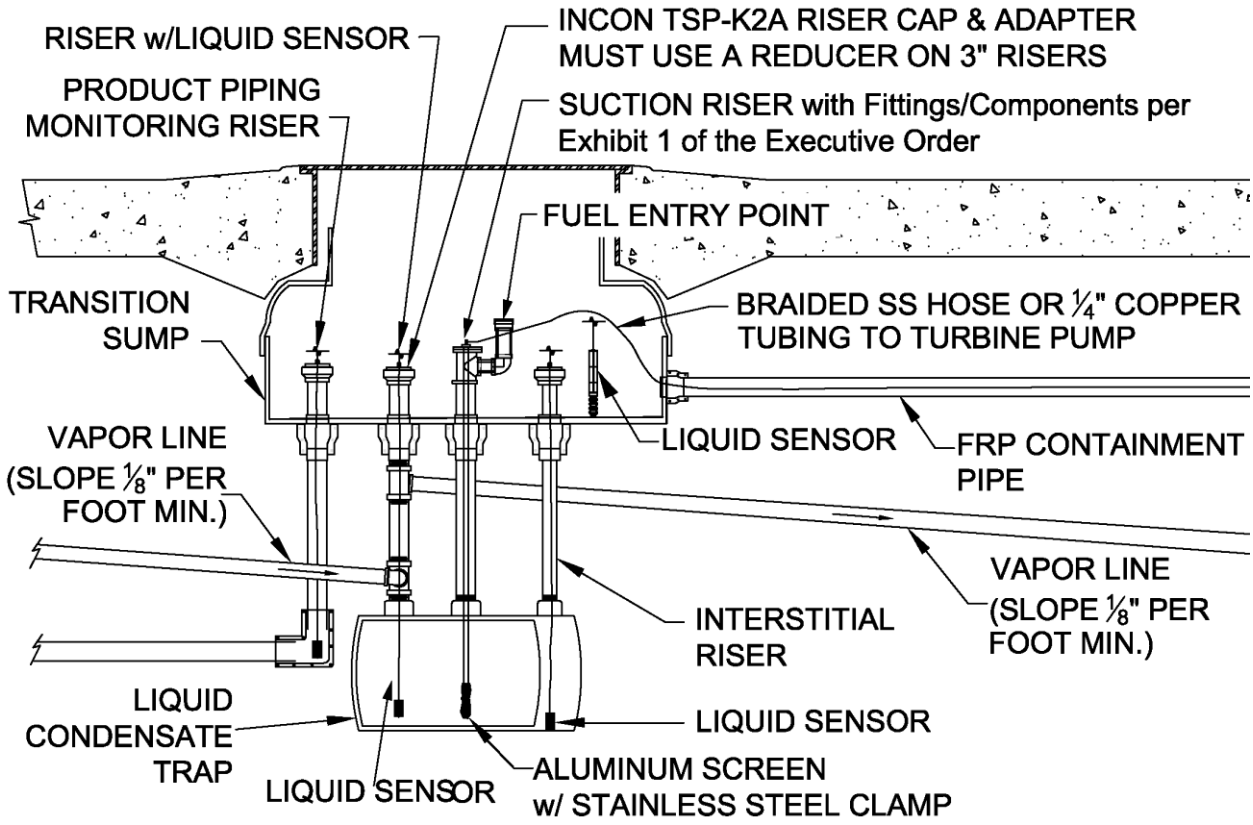

5. PRETEST PROCEDURE

5.1. No dispensing is allowed to any vehicle for the duration of the test.

5.2. Prior to testing, turn off the 87 grade turbine pump that is connected to the LCT suction line. (This is to keep from evacuating the LCT when adding gasoline for testing.)

5.3. Record LCT capacity in Form 1. A metal tag specifying LCT capacity is installed above the Fuel Entry Point (See Figures 11-1 and 11-2). If LCT capacity tag is not installed, the LCT is not in compliance with Exhibit 2 specifications.

6. TEST PROCEDURE:

6.1. Remove plug or cap on Fuel Entry Point installed at the suction riser of the LCT. Add gasoline through the open Fuel Entry Point (see Figures 11-1, 11-2 and 11-3).

For a typically sized LCT (9.9 gallons) this will be approximately 2 to 3 gallons of gasoline because the Liquid Sensor is installed at 2 inches from the bottom of the LCT (See Figure 11-4). For larger LCTs do not introduce more gasoline than 10 percent capacity of the LCT.

6.2. Verify the Liquid Sensor activates an Audible and Visual Alarm at the tank monitoring system control panel (control panel) and obtain a printout of the alarm/sensor status (see attached Appendix A for instructions on printing out the sensor alarm report for the Veeder-Root and INCON tank monitoring systems). Record results on Form 1 and attach printout of sensor status. After verification you may silence the Alarm.

If there is **No** Audible and Visual Alarm at the control panel within five (5) minutes, the LCT is not in compliance with Exhibit 2 specifications.

6.3. Verify Liquid Evacuation: Turn on the turbine pump that is connected to the LCT. Maintain this turbine pump operation (running) until the Liquid Sensor Alarm has cleared (*i.e.* turned off). Record results on Form 1 and attach printout of sensor status (see attached Appendix A for instructions on printing out the sensor alarm report for the Veeder-Root and INCON tank monitoring systems).

Note: To keep this turbine pump running you may need to authorize more than one fueling point during the testing period.

If the Liquid Sensor Alarm **does not clear**, (gasoline is not being evacuated), the LCT is not in compliance with Exhibit 2 specifications.

7. POST TEST PROCEDURE:

Reinstall plug or cap on the Fuel Entry Point using pipe thread sealant (*e.g.* pipe dope) **and** gasoline compatible PTFE tape (*e.g.* Teflon® tape, plumber's tape, or tape dope).

8. REPORTING RESULTS

Record all alarms and evacuation test results, as well as any failures on Form 1. Ensure all printouts from control panel are attached to Form 1. Districts may require the use of alternate forms provided that the alternate forms include the same parameters as identified in Form 1.

FIGURE 11-2
Open Fuel Entry Point

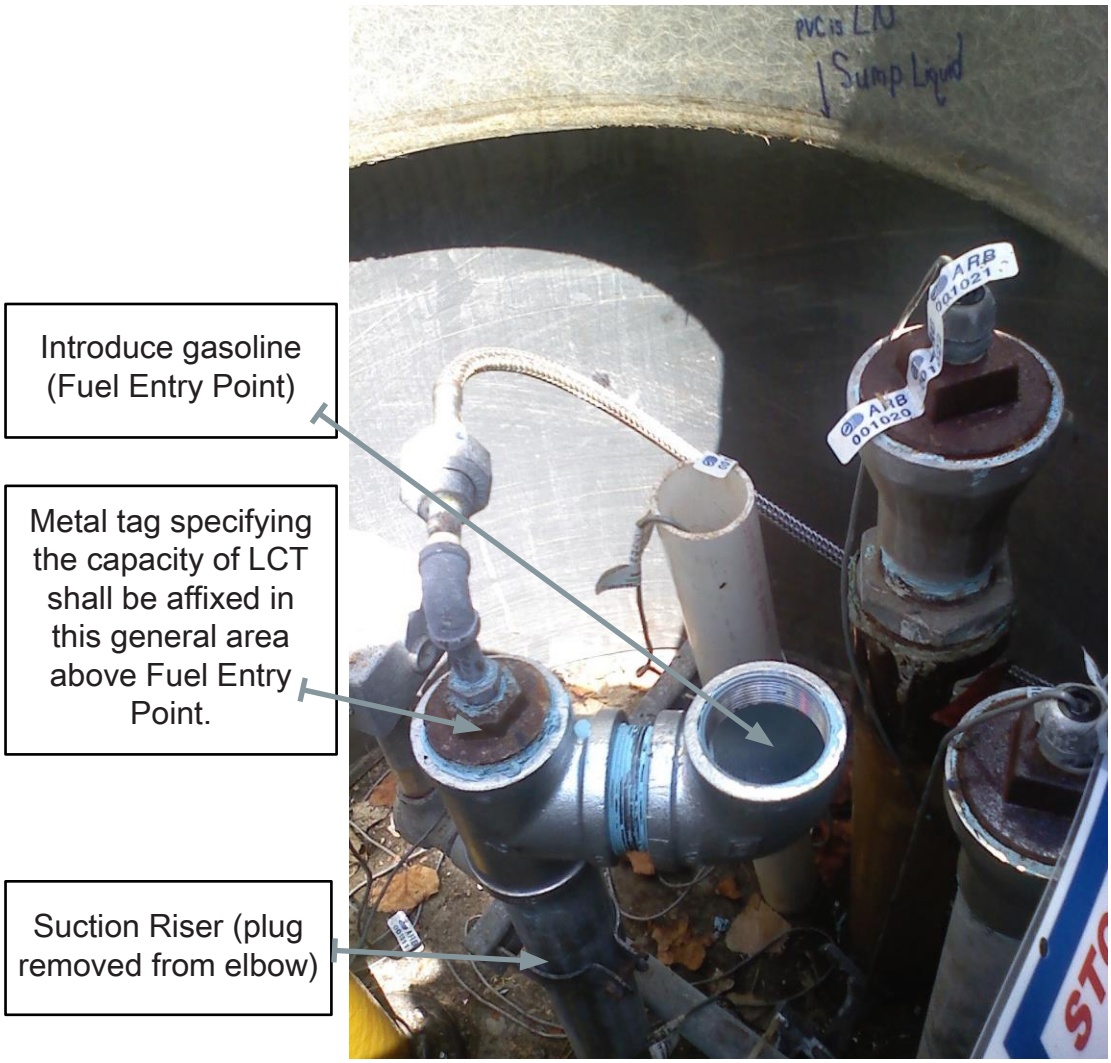

FIGURE 11-3
Adding Gasoline through Open Fuel Entry Point

FIGURE 11-4
Liquid Sensor Height Setting

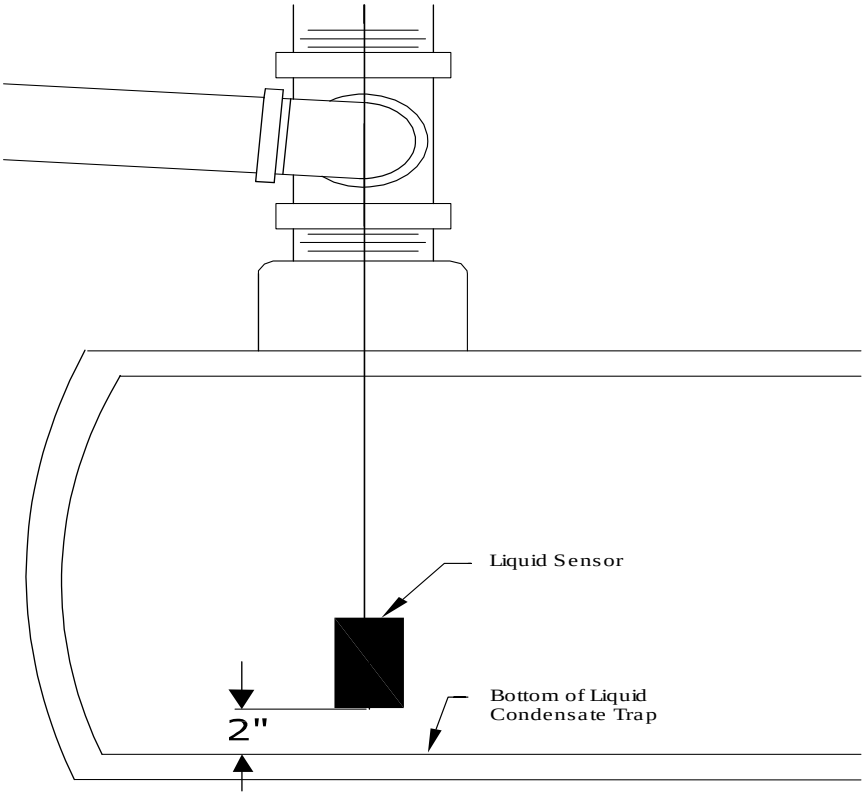

FORM 1

Required Data When Conducting the Liquid Condensate Trap Compliance Test Procedure

Liquid Condensate Trap Compliance Test Form	
Service Company Name	Service Company's Telephone
Date of Test	Certification #'s (as applicable) Tech. Cert. #
Station Name and Address	District Training Cert. # ICC Cert. #
Service Technician (print name and sign)	District Permit #
	Capacity of LCT in gallons

Applicable Step Number	Requirement	Verification (please circle)
Step 3.2	Gasoline below 90 percent capacity level of UST?	Yes No
Step 5.3	Was tag with LCT capacity present above Fuel Entry Point?	Yes No
Step 6.2	Did Liquid Sensor activate an Audible Alarm as well as a Visual Alarm at control panel within five minutes after adding gasoline? (Attach alarm/sensor status printout to this Form.)	Yes No
Step 6.3	Did LCT evacuate and Sensor Alarms clear? (Attach alarm/sensor status printout to this Form.)	Yes No

Appendix A

VEEDER-ROOT LCT LIQUID SENSOR ALARM REPORT

There are many manufacturers of UST tank monitoring systems. The following are steps to print the Liquid Sensor Alarm History Report from the UST tank monitoring console for the Veeder Root TLS 350 Tank Monitoring System.

NOTE: When the LCT liquid sensors were originally programmed into the Tank Monitoring System the title given to those sensors included “LCT” in the name (for example if Liquid Sensor 10 is the High Level Liquid Sensor for the LCT it could have been named “L10 LCT High Liquid”.)

Veeder Root TLS Console

Liquid Sensor Alarm History Reports are a record of the last three alarms for the liquid sensor selected. To print a liquid Sensor Alarm History Report **and** if Maintenance Tracker is enabled go to Exhibit 12 for instructions (to temporarily disable Maintenance Tracker) and then return to instructions below.

How to Obtain Liquid Condensate Trap (LCT) Alarm Print-outs

Step	Button Pushed	Number of Times Pushed	Readout
1	MODE	Multiple, Push until readout on right is shown	SETUP MODE
2	FUNCTION	Multiple, Push until readout on right is shown	LIQUID SENSOR SETUP
3	PRINT*	Once	LIQUID SENSOR SETUP
4	MODE	Multiple, Push until readout on right is shown	DIAG MODE
5	FUNCTION	Multiple, Push until readout on right is shown	ALARM HISTORY REPORT
6	STEP	Multiple, Push until readout on right is shown	L#: ALARM HISTORY
7	TANK/SEN-SOR	Multiple, until you reach the liquid sensor number assigned to the High Liquid Level in the LCT.	EXAMPLE: L10:LCT HIGH LIQUID
8	PRINT**	Once	EXAMPLE: L10:LCT HIGH LIQUID
9	MODE	Multiple, Push until readout on right is shown	MM DD, YYYY HH:MM:SS: XM ALL FUNCTIONS NORMAL

* A printout will be generated displaying a read-out of all liquid sensors. Find the liquid sensor number assigned to the LCT.

** A printout will be generated displaying the last three alarms for the Liquid sensor assigned to the LCT.

Appendix A (Continued)

INCON LCT LIQUID SENSOR ALARM REPORT

Follow the figures below to print a Sensor Report for LCT Alarm (Do not select Alarm History):

FIGURE 1

Press 'Home' button until you reach the screen shown below. Select 'Print' Option.

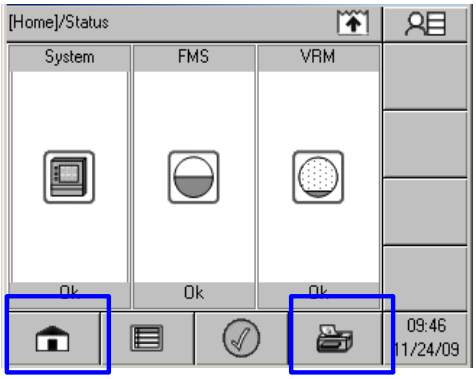

FIGURE 2

Select 'FMS' Option

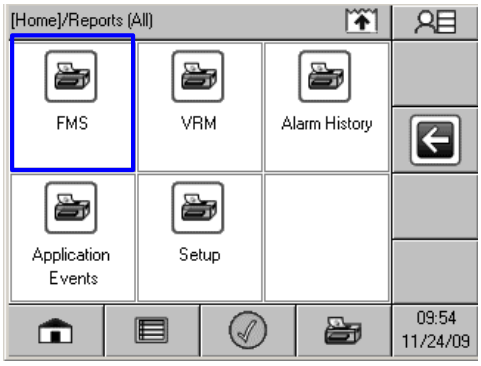

FIGURE 3

Select 'Sensor' Option. You may need to press the 'scroll ' button to see the 'Sensors' selection on screen.

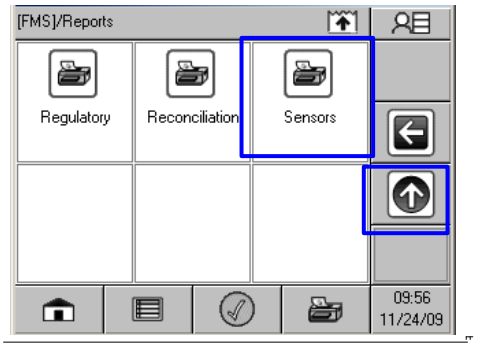

FIGURE 4

Select 'Print' Option.

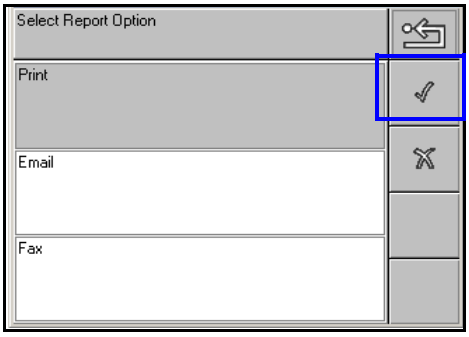

FIGURE 5

Select 'Last Available' Option. If your alarm does not show, select 'Last 30 Days' or current month and year Option. Be patient, printer takes a few minutes to print.

Exhibit 12
VEEDER-ROOT MAINTENANCE TRACKER (Optional)

Definitions common to all certification and test procedures are in:

D-200 Definitions for Vapor Recovery Procedures

For the purpose of this procedure the term “ARB” refers to the California Air Resources Board, and the term “Executive Officer” refers to the ARB Executive Officer or his or her authorized representative or designate.

1. PURPOSE AND APPLICABILITY

The Maintenance Tracker is an optional security device produced and marketed by Veeder-Root (VR) as a means to control and record access to their tank monitoring and ISD systems. Unless a specialized “technician key” is made available, the Maintenance Tracker prevents unauthorized personnel from gaining access to tank monitoring system diagnostic and setup modes which are necessary to clear system alarms. The technician key is a physical chip device, similar to a flash memory stick, which plugs into a companion RS232 card installed on the TLS Console.

Because the Veeder-Root In-Station Diagnostics (ISD) system resides within the TLS Console, the Maintenance Tracker also restricts access to ISD related parameters such as vapor pressure sensor values. When Maintenance Tracker is installed and enabled, the parameters listed in Table 1 (see below) are not accessible through the TLS Console unless a technician key is made available. An alternative way to access these parameters without a technician key is available through the RS232 interface by using a software program developed by Veeder-Root called “ISD Setup Tool” version 1.09 or higher.

The purpose of this procedure is to provide instructions on how to access ISD and tank monitoring parameters specified in Table 1 when Maintenance Tracker is installed and enabled. This procedure only applies to GDFs equipped with Veeder-Root ISD systems or Veeder-Root tank monitoring systems. This procedure shall be used in conjunction with the appropriate or applicable procedure listed in Table 1.

The term “TLS Console” used throughout this Exhibit includes but is not limited to TLS-350, TLS-350 Plus, TLS-350-R, Red Jacket ProMax, and Gilbarco EMC consoles, which are also referenced in Exhibit 1.

TABLE 1
Description of ISD and Tank Monitoring Parameters
Restricted By Maintenance Tracker

Executive Order	Exhibit	Description of Parameter
VR-201	**Exhibit 9:** Liquid Condensate Trap Compliance Test Procedure	Liquid Sensor Alarm History Report
VR-202	**Exhibit 9:** Veeder-Root ISD Operability Test Procedure	1. ISD Pressure Sensor Value 2. EVR/ISD Setup Report
VR-202	**Exhibit 11:** Liquid Condensate Trap Compliance Test Procedure	Liquid Sensor Alarm History Report

2. PRINCIPLE AND SUMMARY OF PROCEDURE

As indicated in section one, there are two ways to access ISD and tank monitoring parameters when Maintenance Tracker is installed and enabled; directly from the TLS Console using a key or indirectly through the RS232 interface using a specialized software program developed by Veeder-Root. This procedure provides access instructions for both methods. Option 1 provides instructions on how access the ISD and tank monitoring parameters directly from the TLS Console when a Maintenance Tracker key is available. Option 2 provides instructions on how to access the ISD and tank monitoring parameters through the RS232 interface by using the software program called “ISD Setup Tool” version 1.09 or higher.

3. BIASES AND INTERFERENCES

3.1. This procedure shall be used in conjunction with the applicable procedure listed in Table 1. All biases and interferences must be followed for each test procedure (or Exhibit) within ARB Executive Orders VR-201 and VR-202 and any subsequent amendments or revisions.

3.2. If the GDF is equipped with a wireless vapor pressure sensor (Veeder-Root part number 861190-201), the only way to access the parameters in Table 1 is to use Veeder-Root ISD Setup Tool version 1.10 or higher.

4. EQUIPMENT

4.1. Option 1: Maintenance Tracker Key, see Figure 3.
To acquire a Maintenance Tracker key contact Veeder-Root Technical Support at 1-800-323-1799 M-F 8am-7pm ET or technicalsupport@veeder.com.

4.2. Option 2: RS232 interface (standard on all ISD systems), laptop computer, cables, and Veeder-Root ISD Setup Tool version 1.09 or higher software. To acquire a copy of ISD Setup Tool version 1.09 or higher contact Veeder-Root Technical Support at 1-800-323-1799 M-F 8am-7pm ET or technicalsupport@veeder.com.

5. PRE ACCESS PROCEDURE

This procedure shall be used in conjunction with the applicable procedure listed in Table 1. All pretest procedures must be followed for each test procedure (Exhibit) within ARB Executive Orders VR-201 and VR-202 and any subsequent amendments or revisions.

6. ACCESS PROCEDURE

6.1. Option 1: Accessing ISD and tank monitoring parameters through the TLS Console when Maintenance Tracker is enabled and key is available:

6.1.1. When the top center key on the Veeder-Root TLS Console is pressed, “MAINTENANCE TRACKER ENABLED” is displayed. See Figure 1.

FIGURE 1
Maintenance Tracker Enabled on TLS Console

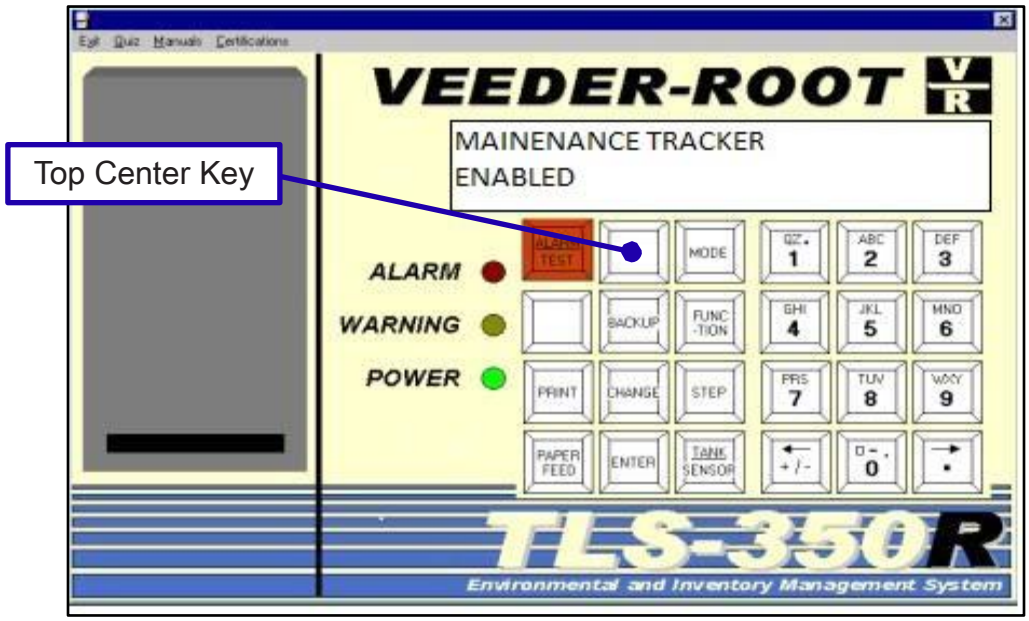

6.1.2. In order to gain access to the diagnostic and setup menus, the user would then press the step key. The display will now read: “INSERT KEY PRESS <ENTER>”. See Figure 2.

FIGURE 2
Maintenance Tracker Enabled on TLS Console

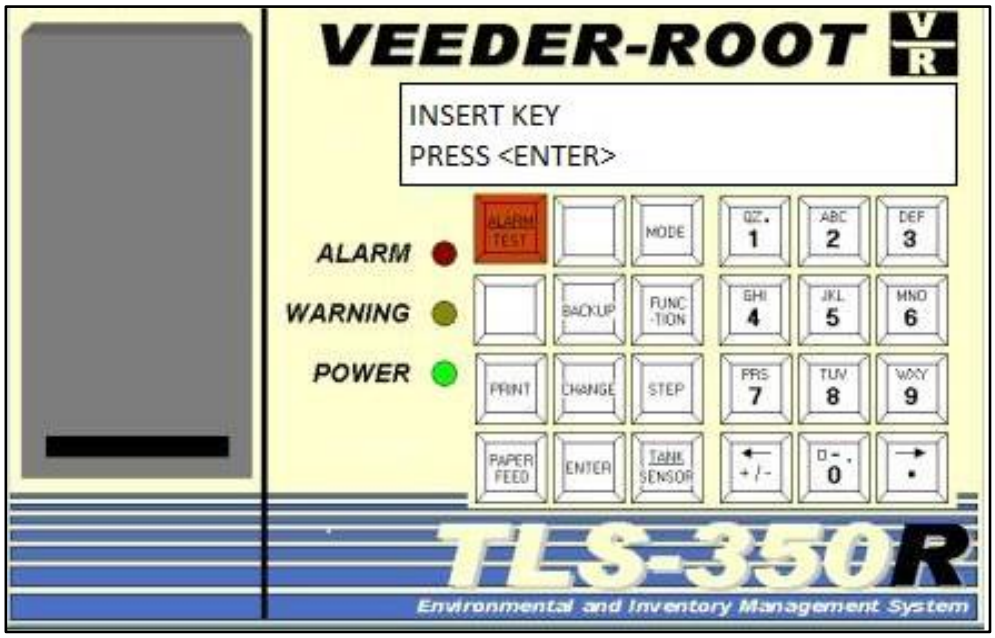

6.1.3. The Maintenance Tracker key (see Figure 3) must be plugged into a RS-232 port underneath the TLS Console within one minute or system will timeout. See Figure 4.

FIGURE 3
Maintenance Tracker Key

FIGURE 4
Maintenance Tracker Key Plugged Into TLS Console

6.1.4. Once the Key is inserted and recognized, the TLS Console display will now display “MAINTENANCE TRACKER LOGIN OK: XXXXXX”. The XXXXXX is the Technician Identification Number. See Figure 5. The feature has now been temporarily disabled. Any key pressed will now display “ALL FUNCTIONS NORMAL”.

FIGURE 5
Maintenance Tracker Temporarily Disabled

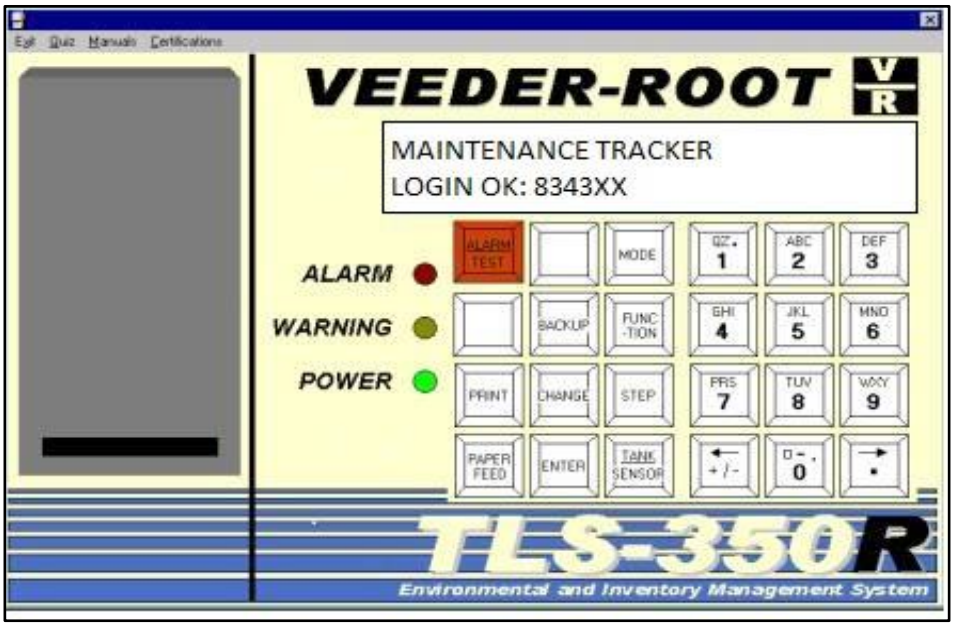

6.1.5. Return to the Exhibit listed in Table 1 to continue the test (Exhibit) in progress.

6.2. Option 2: Accessing ISD parameters through the RS232 interface when Maintenance Tracker is enabled yet key is not available:

6.2.1. Connect a PC or Laptop equipped with Veeder-Root ISD Setup Tool version 1.09 or higher software per instructions in IOM 20 of VR-202

6.2.2. Start the ISD Setup Tool version 1.09 or higher software on the laptop or PC.

6.2.3. Click the check mark or enter password when prompted to “Enter Password”. See Figure 6.

FIGURE 6
Veeder-Root Setup Tool-Enter Password

6.2.4. Verify that Veeder-Root ISD Setup Tool version 1.09 or higher is being used. See Figure 7.

NOTE: Figures 7 through 17 are typical views of the laptop screen that may differ for different versions of ISD Setup Tool version 1.09 and higher.

FIGURE 7
Veeder-Root ISD Setup Tool Version 1.09

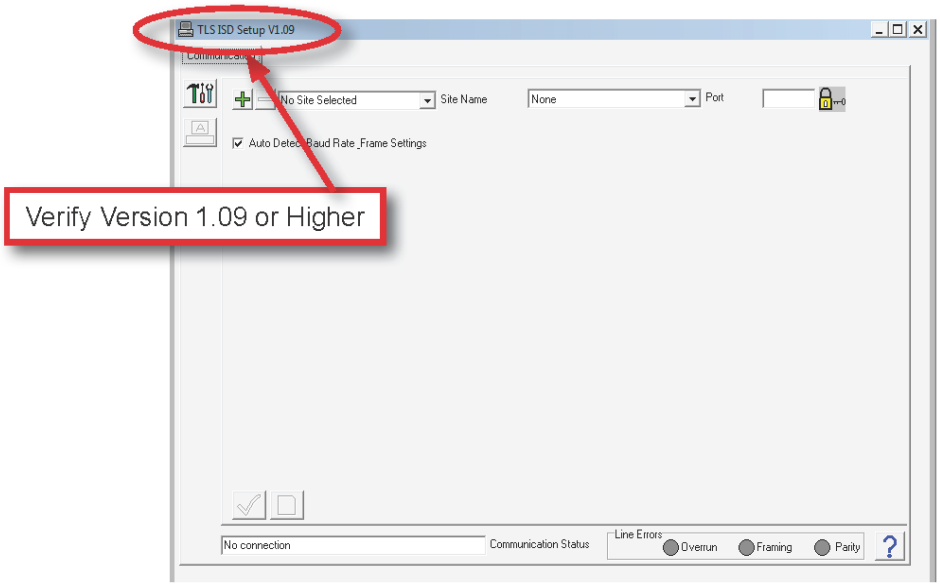

6.2.5. Type in the site name. Then select the communication port and click on the green check mark. See Figure 8.

FIGURE 8
Veeder-Root Setup Tool-Site Name

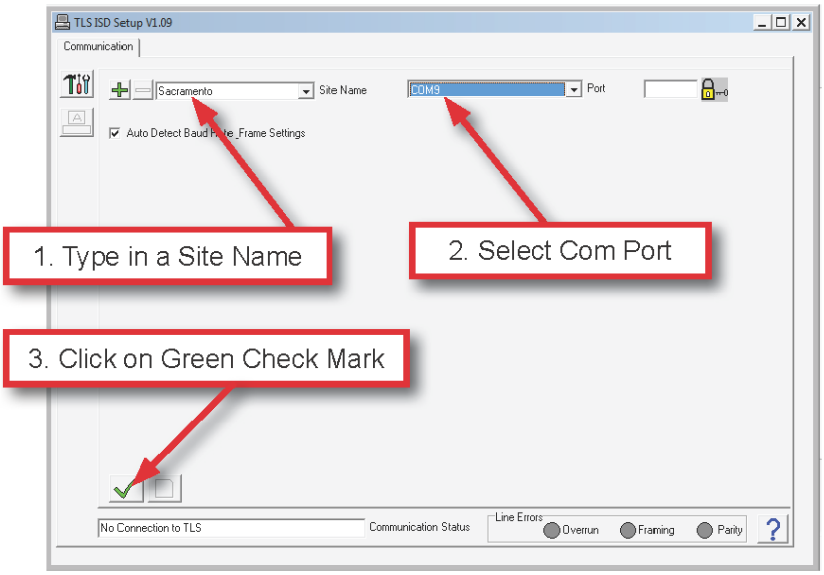

6.2.6. Click on the connect symbol. See Figure 9.

FIGURE 9
Veeder-Root Setup Tool-Connecting

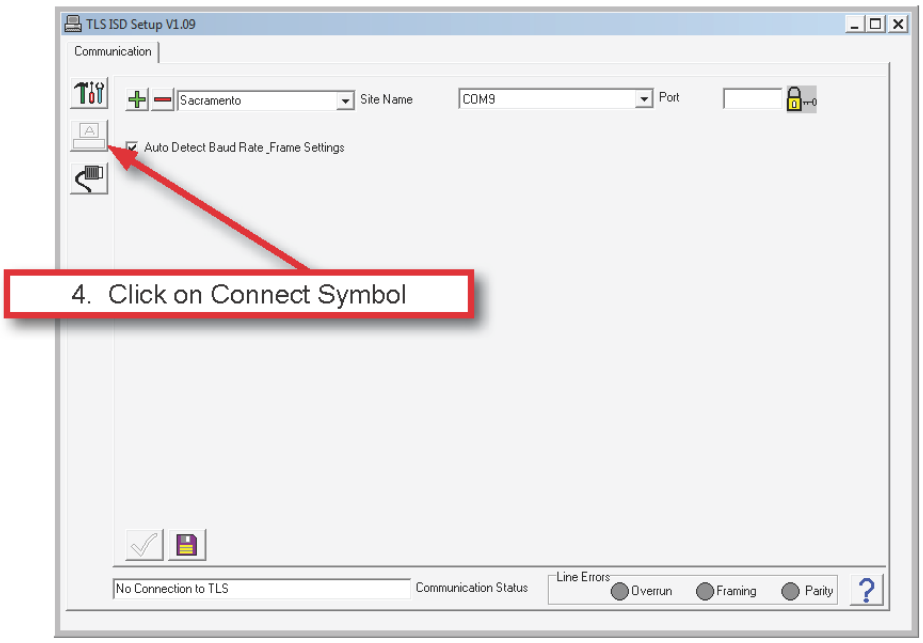

6.2.7. Click OK on the "Warning Message" and then click on the Computer Icon. Software will now connect to the TLS Console. See Figure 10.

FIGURE 10
Veeder-Root Setup Tool-Connecting

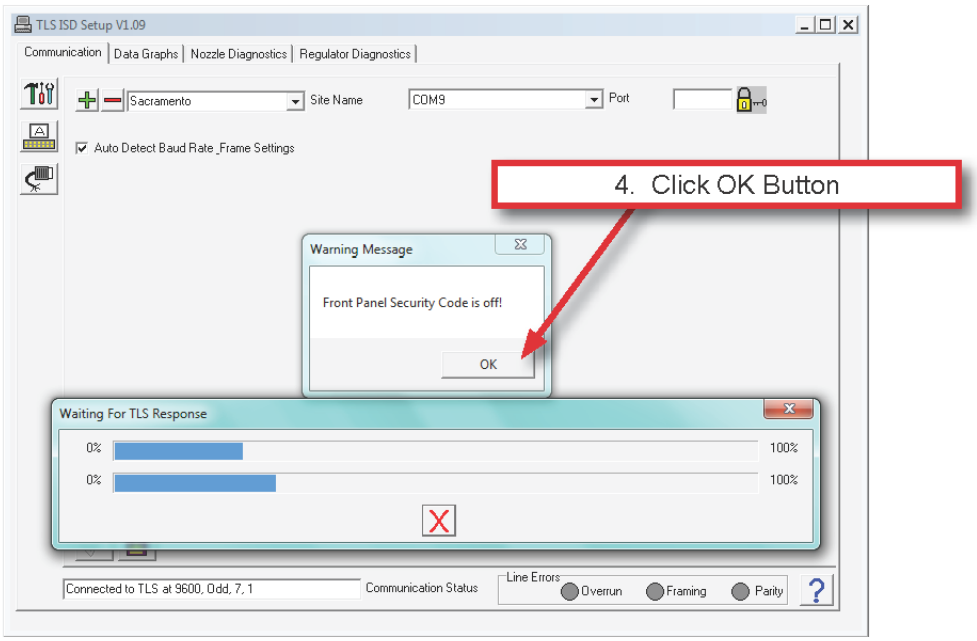

6.2.8. Once connected. Select the “Communication” Tab from the top of the screen. See Figure 11.

FIGURE 11
Veeder-Root Setup Tool-Saving File

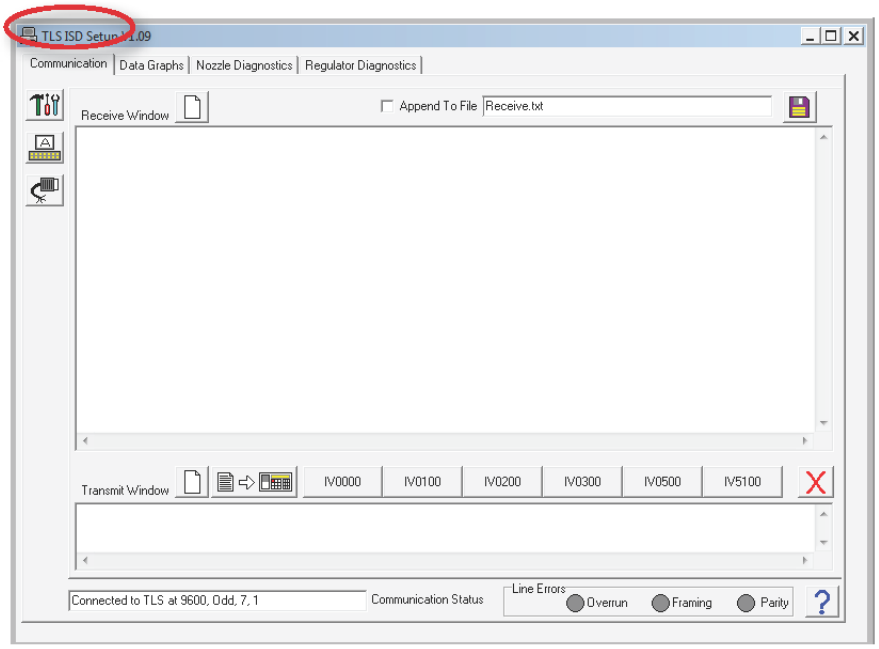

6.2.9. To save reports to a file, click on box to “Append to File”. Then click to browse file location. See Figure 12.

FIGURE 12
Veeder-Root Setup Tool-Saving File

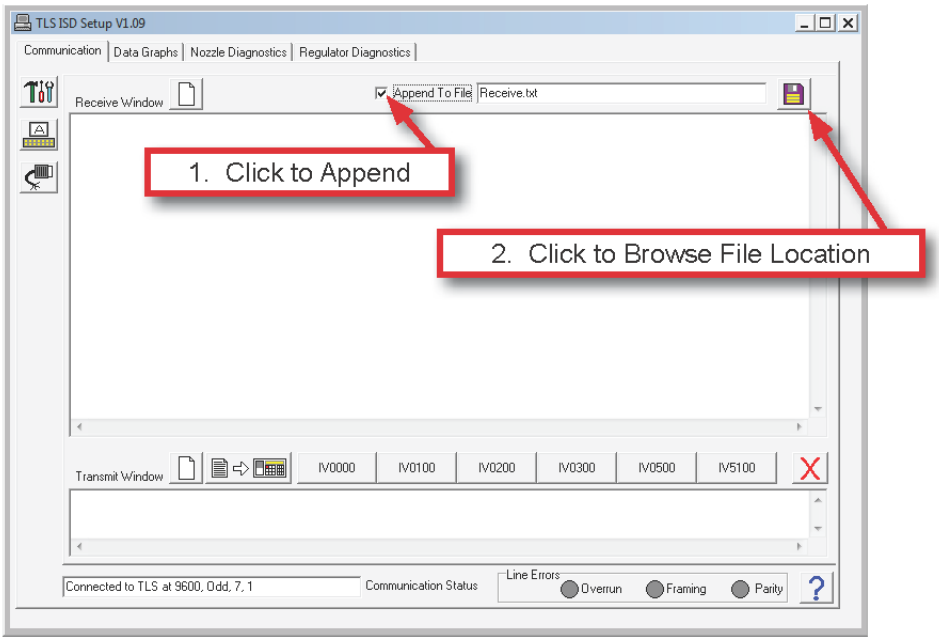

6.2.10. To save reports type in a file name with a .txt extension. See Figure 13.

FIGURE 13
Veeder-Root Setup Tool-Saving File

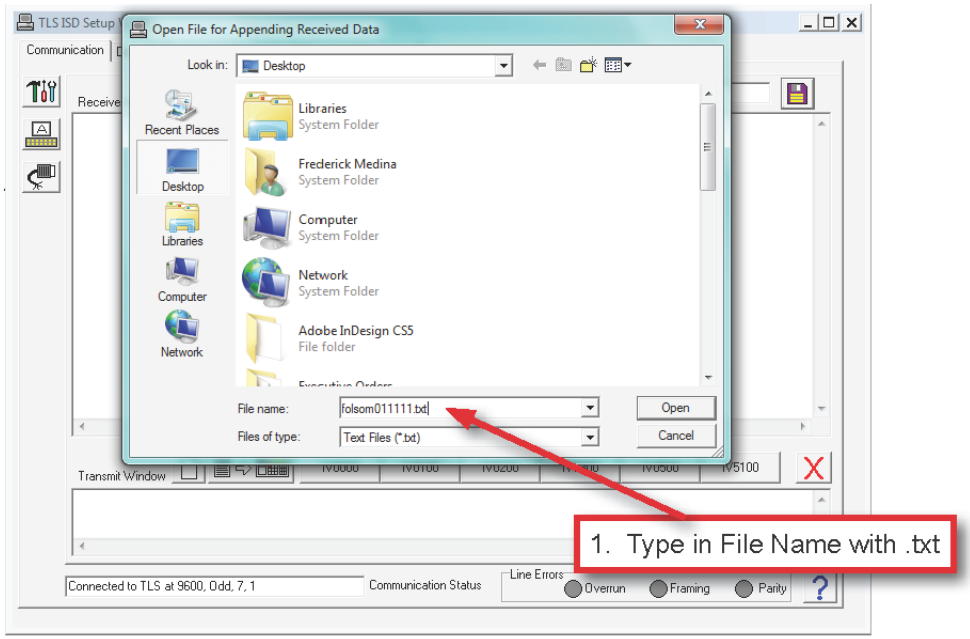

6.2.11. Serial commands can now be entered and results will be saved in file selected above. See Figure 14. The Liquid Sensor Alarm History Report parameters for VR-201 (Exhibit 9) and VR-202 (Exhibit 11) can be accessed by using the following serial command: **I302SS**

The ISD Setup Report for VR-202 (Exhibit 9) can be accessed by using the following serial command for the Hose Table Data: **IV4A00.** The vapor flow meter serial numbers can be accessed with the following serial command: **IV8300.**

FIGURE 14
Veeder-Root Setup Tool-Serial Commands

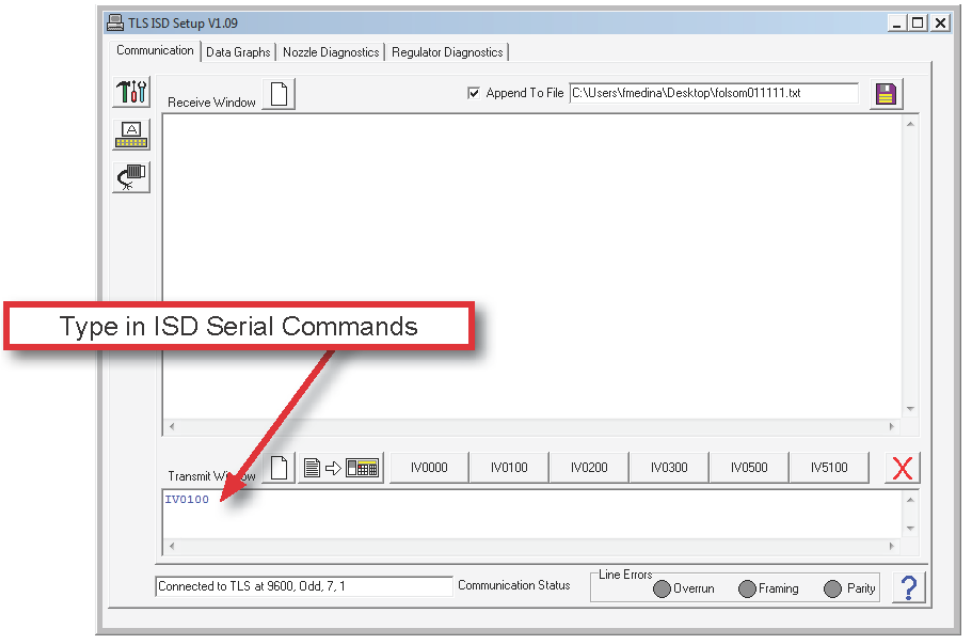

6.2.12. The parameters are listed in Table 2 (see below) can be accessed by selecting the “Regulator Diagnostics” tab from the top of the menu. See Figure 15.

NOTE: Some of the parameters listed do not apply to the Assist Phase II EVR System. The parameters appear in the PC Setup Tool screen
since the tool is also used for the Balance Phase II EVR Systems. Only the Ullage Pressure and Assessment Time are used in VR-201 and VR-202.

TABLE 2
Parameters Accessible Via Regulator Diagnostics Tab

Parameter
Ullage Pressure
Assessment Time
Probe Temperature*
Automatic Vapor Valve Control*
Manual Vapor Valve Control-Open/Close*
Vapor Valve Diagnostics*
Atmospheric Pressure*
Canister Load %*

*These Parameters do not apply to the Assist Phase II EVR System

FIGURE 15
Veeder-Root Setup Tool-Regulator Diagnostics

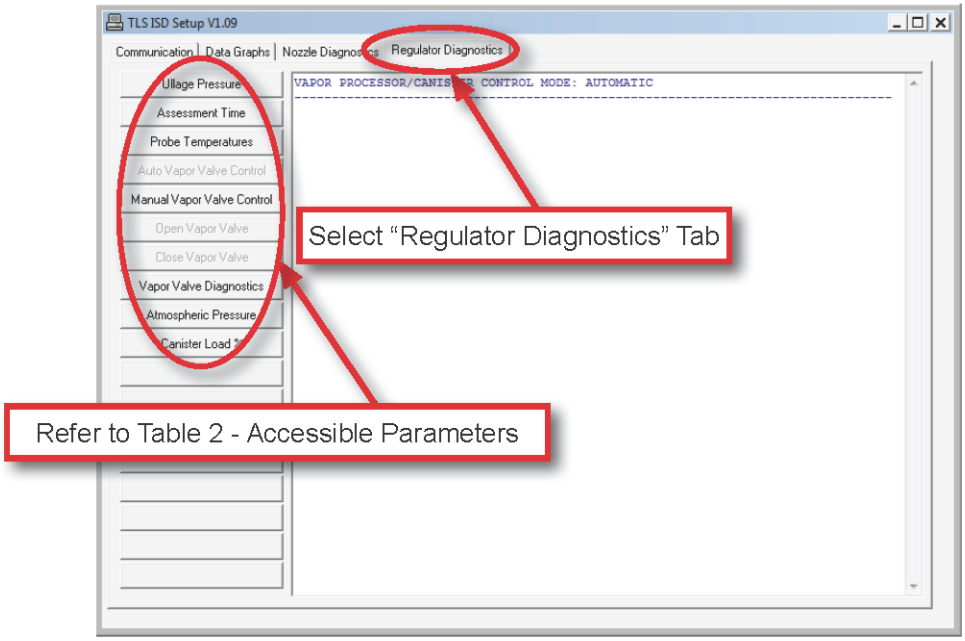

6.2.13. To access the current ullage pressure reading, select the “Regulator Diagnostics” tab at the top of the screen and select “Ullage Pressure” on the left side of the screen. See Figure 16.

FIGURE 16
Veeder-Root Setup Tool-Ullage Pressure

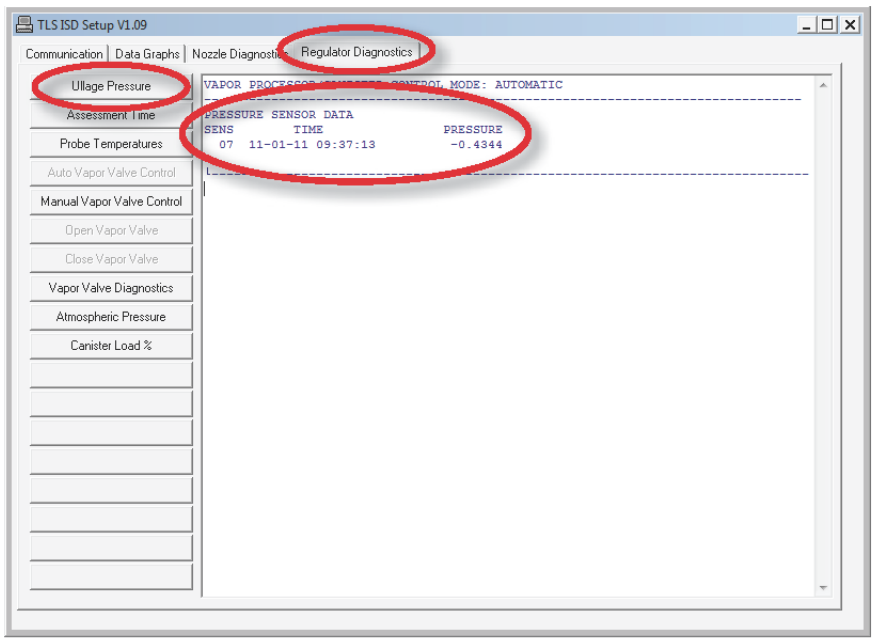

6.2.14. To access current ISD assessment time, select the “Regulator Diagnostics” tab at the top of the screen and select “Assessment Time” on the left side of the screen. See Figure 17.

FIGURE 17
Veeder-Root Setup Tool-ISD Assessment Time

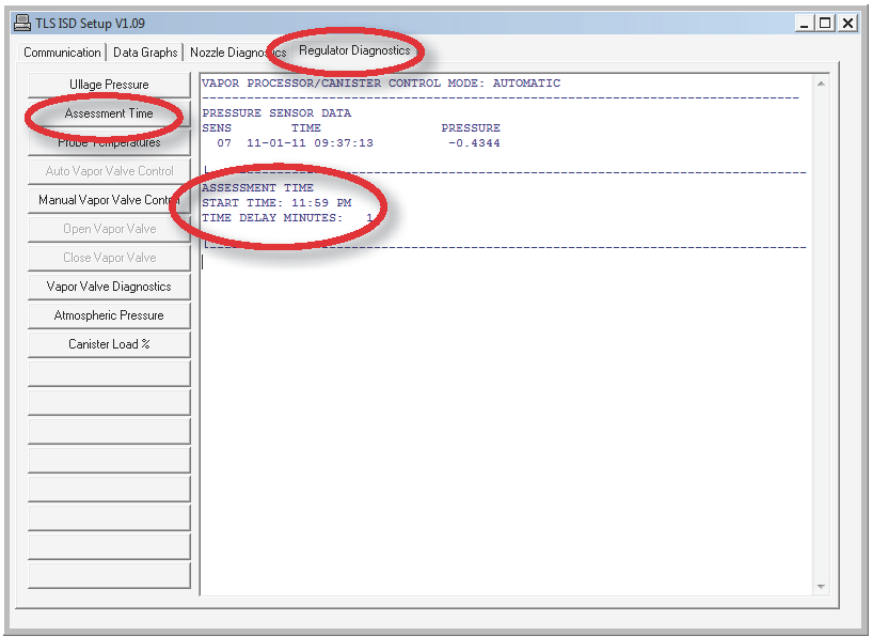

Exhibit 13
VAULTED ABOVEGROUND STORAGE TANK CONFIGURATION *(Optional)*

This exhibit allows an alternate tank storage configuration for the Assist EVR system. A vaulted aboveground storage tank (AST) may be installed in substitute for a conventional underground storage tank (UST). The figures in this exhibit provide examples of typical vaulted AST configurations.

General Specifications

1. Alternate typical vaulted AST configurations for the Assist Phase II EVR System are shown in Figures 13-1, 13-2, 13-3, and 13-4.
2. Unless otherwise specified in this Executive Order (EO), the vaulted AST configuration shall comply with the applicable performance standards and performance specifications in CP-201.

Figure 13-1: Front Sectional Views of Typical Vaulted AST

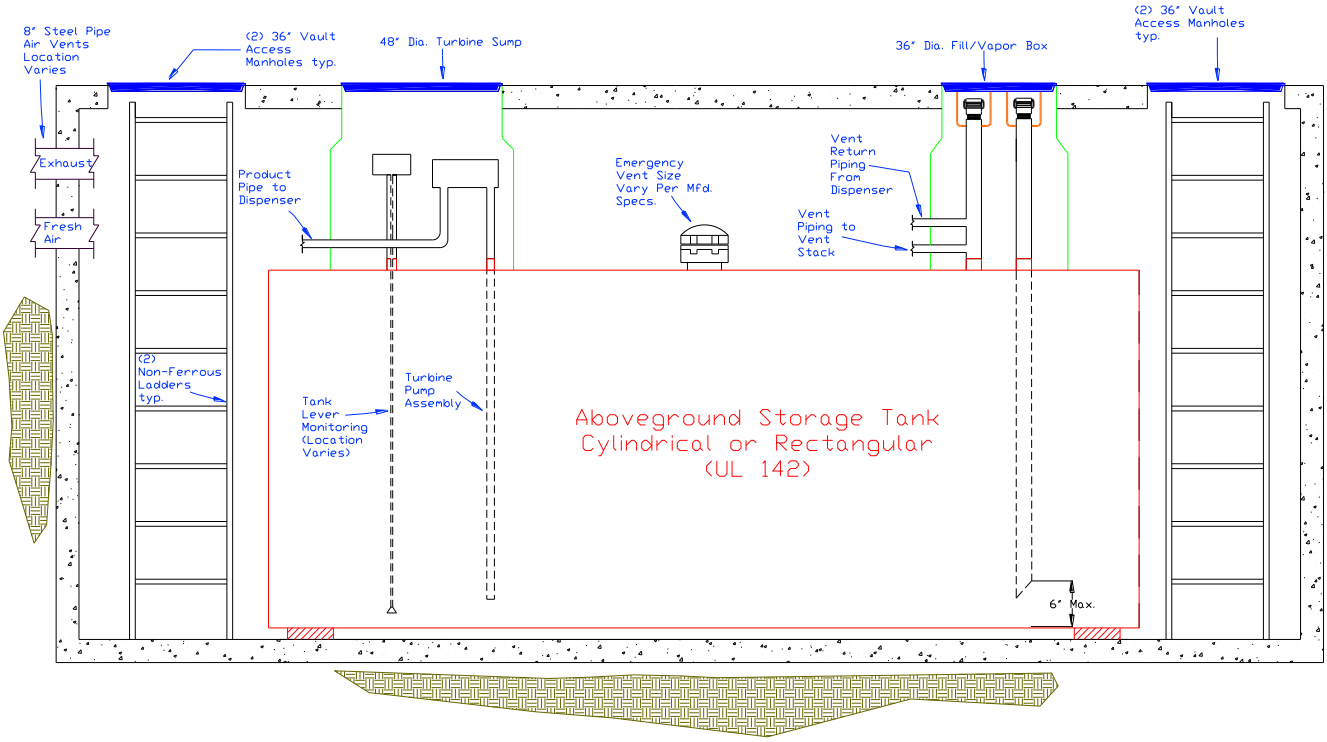

Figure 13-2: Top Sectional View of Typical Vaulted AST

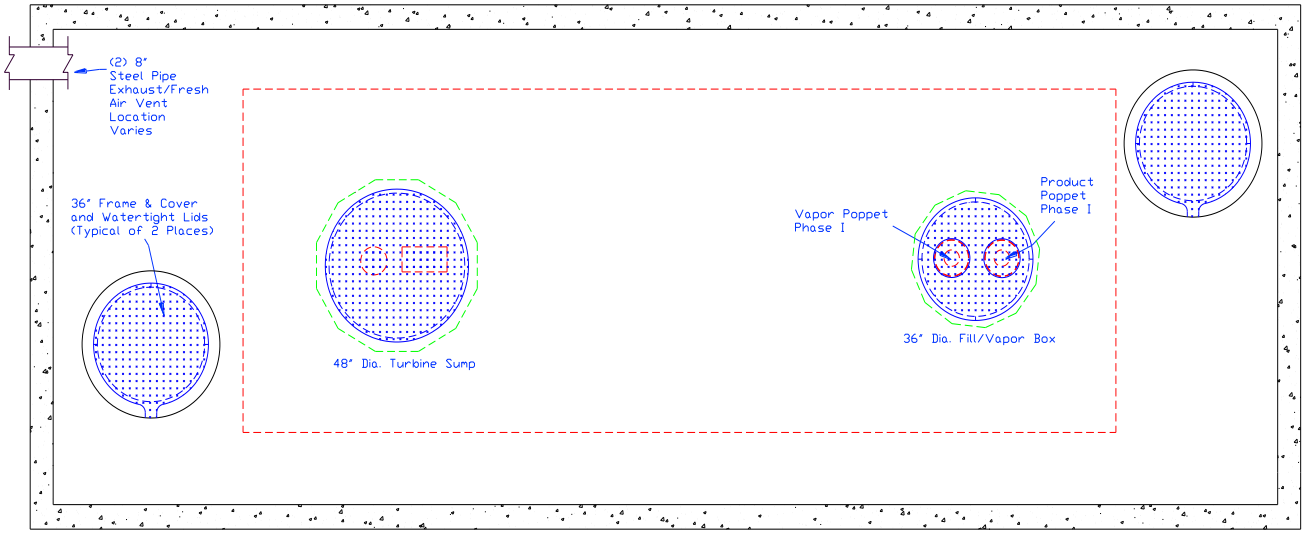

Figure 13-3: End Sectional View of Typical Vaulted AST

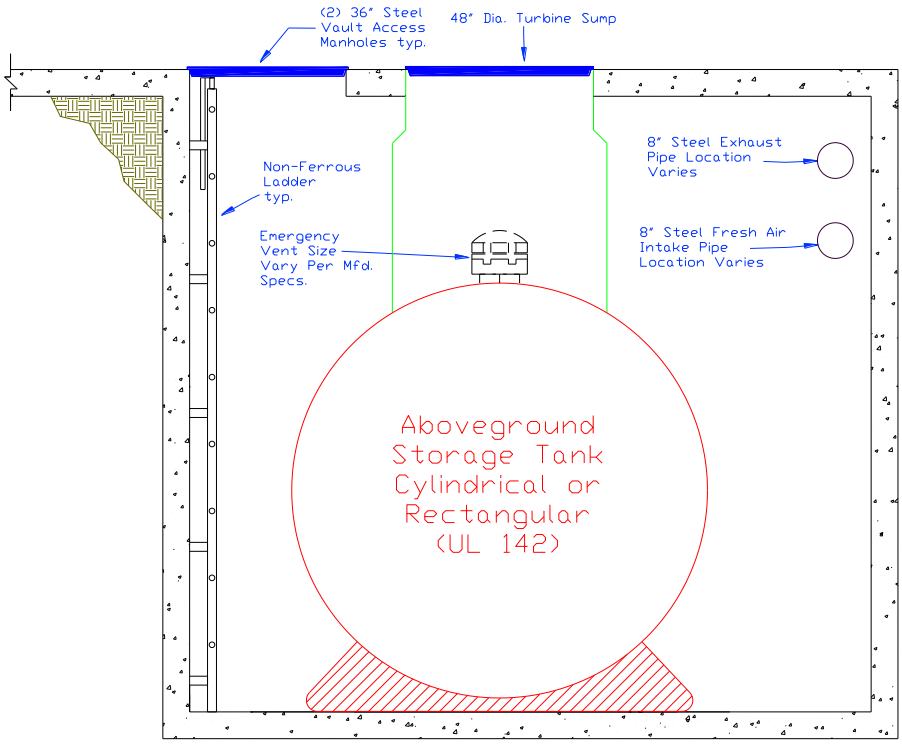

Figure 13-4: Sectional Views of Typical Vaulted AST (Ventilation)

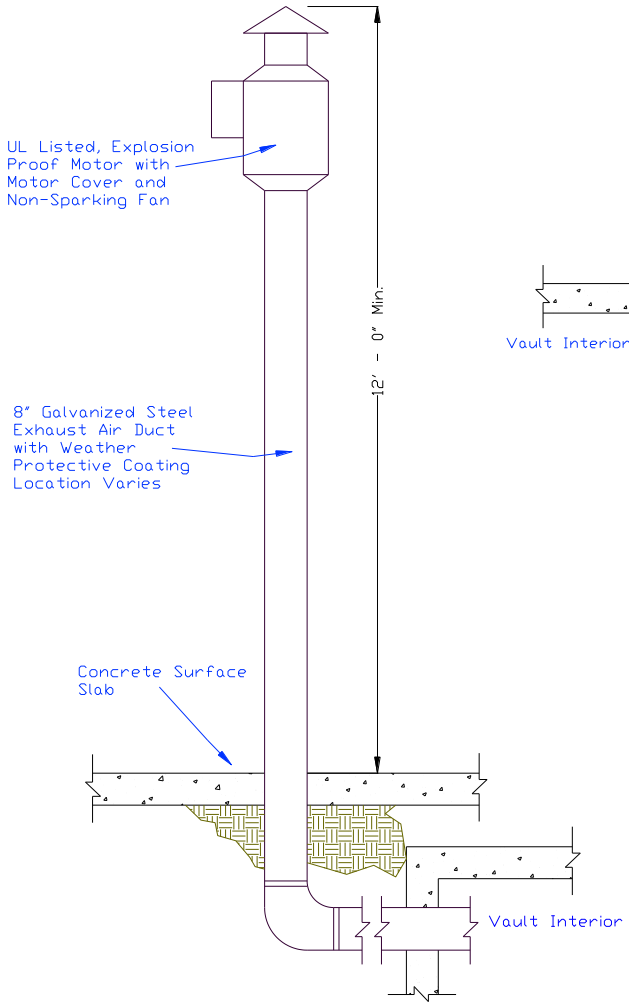

Figure 13-4a: Typical Exhaust

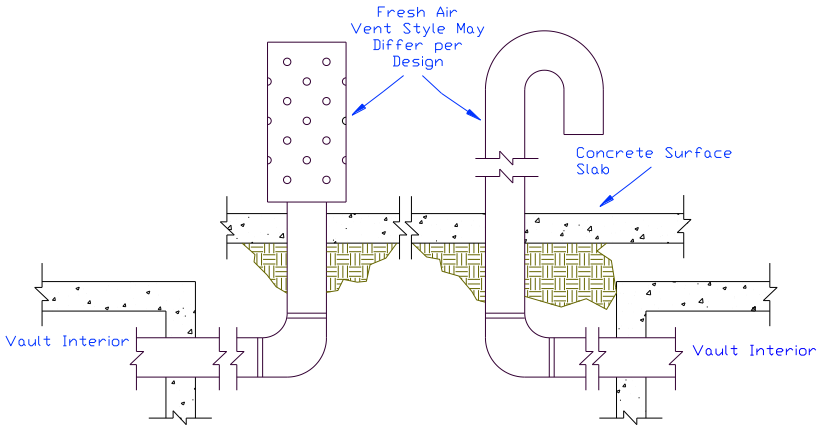

Figure 13-4b: Typical Fresh Air Intake