Executive Order VR-202-R
Assist Phase II EVR System
Including In-Station Diagnostic (ISD) Systems

Exhibit 1
EQUIPMENT LIST

SECTION I
Part 1 - Equipment List

Component	Manufacturer/Model
Nozzle	Healy Model 900 (Figures 1-1 and 1-2) Note: Nozzle can have either a two position or three position hold open clip (see Figure 1-1)
Clean Air Separator	Healy Model 9961 Clean Air Separator (Figures 1-3 and 1-4) Healy Model 9961H Clean Air Separator (Figures 1-3H and 1-4H)
Inverted Coaxial[1] Hoses	Healy Model 75 Series (3/4" I.D.) Low Permeation Hose (Figure 1-5a) 75W-XXX-YZYZ-LP Where: W represents color of hose (varies) Note: Product label will have an "X" in this position for all hose colors XXX represents hose length First two digits for length in feet Last digit - length in tenths of foot Note: Product label will have "XXX" in this position for hose length Y represents hose end type S = Swivel End F = Fixed End Z represents thread type 2 = Healy Straight Thread 3 = Metric Thread 4 = Balance-Type Thread

[1] Facilities operating under Executive Order VR-202 revisions A thru P may continue to use hoses listed in those Executive Orders until ARB has determined that low permeation hoses are commercially available for use at these facilities.

Component	Manufacturer/Model
	Veyance Futura HVR Low Perm Series Hose (3/4" I.D) (Figure 1-5b) 532-33W-X24-0YYZZ Where: W = specifies hose color (varies) X = specifies fitting combination 2 = S2S2 3 = S3F2 4 = S4F2 5 = F2F2 6 = F3F2 7 = S2F2 8 = S4S2 Y = specifies hose length in feet Z = specifies hose length in tenths of feet
Dispenser Conversion Adaptors (Optional)[2]	Healy Model CX6-A (Required on Gasboy, Global Century, Reliance and Select Dispensers) Healy Model CX6-VV1A* Healy Model CX6-VV2A* Healy Model CX6-VV3A EBW Model 303-301-01 (Figures 1-8 and 1-9) Note: Items marked with asterisk (*) are no longer manufactured, but may be used for dispenser retrofit.
Reconnectable Breakaway Coupling	Healy Model 8701VV (Figure 1-10a) Healy Model 807 Swivel (Figure 1-10b) Catlow Model CTMCA (grey cover) (Figure 1-10c) VST Model VST-HEVR-SBK (Figure 1-10d)
Flow Limiter[3]	Healy Model 1301 (Figures 1-11 and 1-12) Healy Model 1302 (Figures 1-13 and 1-14)

[2] If optional components are installed or required by regulations of other agencies, the components and model numbers manufactured by Franklin Fueling Systems may be used to facilitate installation. The use of dispenser conversion adaptors not listed above may be used to facilitate installation provided that all applicable performance standards are met.

[3] Flow limiter is mandatory when the flow rate is greater than 10.0 gallons per minute to comply with US EPA requirement. 1301 is used with 8701VV breakaway. 1302 is used with 807 swivel breakaway.

Component	Manufacturer / Model

Dispenser Vacuum Pump

Healy Model VP1000 Vacuum Pump
Healy/Franklin Electric Model VP1000 Vacuum Pump
(Figure 1-15)

Control Module

Healy Model MC 100
(Figure 1-16)

Dispensers

Note: Unihose dispensers shall be required unless as provided by Section 4.10 of CP-201.

Gilbarco Encore Series[4]

Healy Kit VP1000R[5] or VP1000S[6]

Model#'s	Description:
NAO	Encore 1 Grade Multi-hose
NA1	Encore 2 Grade Multi-hose
NA2	Encore 3 Grade Multi-hose
NA3	Encore 4 Grade Multi-hose
NG0	Encore 3 Grade Single-Hose
NG1	Encore 4 Grade Single-Hose plus 1
NG4	Encore 2 Grade Single-Hose
NJ0	Multi-hose Blender
NJ2	Multi-hose Blender plus
NL0 NL1 NL2 NL3	Encore X+1 Blender
NN0 NN1 NN2 NN3	Encore X+0 Blender

GasBoy 9800 Series (Gilbarco)

Healy Kit VP1000M[7]

Model#'sDescription:
9852 – Suffix1 Suffix2
9853 – Suffix1 Suffix2
Where:
Suffix1 can be:
A = Factory fabrication and assembly modifications to chassis

[4] Encore Dispensers factory equipped with Healy VP1000 will now have an angled (~13°) outlet casting.
[5] Kit used to install Healy components in Encore Balance series dispenser. VP1000R previously sold as equivalent to VP1000L.
[6] Kit used to install Healy components in Encore Assist series dispenser. VP1000S previously sold as equivalent to VP1000K.
[7] Kit used to install Healy components in GasBoy 9800 series dispenser

Component **Manufacturer / Model**

HC = High capacity model
M = Manifold supply inlet at the pumping unit inlet
TW1 = Manifold supply inlet
TW2 = Two individual supply inlets
X = Dispenser supplied by a submersible pump
Q = Utilizes an alternate meter and Pump

Suffix2 can be:

B = Battery back-up for electronics
C = Pump Interface
D = DC conduit and junction box
F = Fuel filter
G = Imperial gallons registration
H = High hose retriever
I = Internal hose retriever
L = Lighted panel
N = Equipped to handle a long spout nozzle
P = Satellite dispenser as part of the unit (for connection to a master pump)
PP = Solenoid valves (optional only on pumps)
R = Liters registration
S = Piping for connection to satellite
SS = Stainless steel panels
SSA = Equipped with stainless steel doors
SSTS = Stainless steel tops and doors
T = Mechanical totalizer
U = Submersible drive relays
W = Heater
Y = Vapor recovery ready
Z = Front Load Nozzle
2 = 230 VAC/60hz operation
3 = 230 VAC/60hz operation with 380VAC/60hz motor (available on all models except 9852Q)
25 = 230VAC/50hz operation
35 = 230VAC/50hz operation with 380VAC/50hz motor
4 = RS-485 interface
5 = 50hz operation
7 = Electronic totalizer activator on

Component **Manufacturer / Model**

both sides
9 = Provided with 900-R Series TopKat

Wayne Harmony Series

Healy Kit VP1000N[8] or VP1000Q[9]

Model#'s Description:
prefix/VXXXYZ/suffix
Where:
prefix = Any number or letter (with a possible "H" for Harmony)
V = Vista
X = Any digit
Y = D or P
D = remote dispenser type for delivering fuel
P = suction pump for delivering fuel
Z = 1, 3, 4, 5, 6, 7 or 8
suffix = D1 or D2, and any combination of number(s) or letter(s)

Wayne Ovation Series

Healy Kit VP1000P[10]

Model#'s Description:
XYZ/ABC
Where:
X = B or R
B = Blended Dispenser
R = Regular Dispenser
Y = Number of hoses per side
1 = one hose per side
2 = two hoses per side
Z = Number of inlets per side
1 = one inlet
2 = two inlets
3 = three inlets
A = Number of grades
1 = one grade
2 = two grades

[8] Kit used to install Healy components to Harmony Balance series dispenser
[9] Kit used to install Healy components to Harmony Assist series dispenser
[10] Kit used to install Healy components to Ovation Balance or Assist series dispenser. VP1000P previously sold as equivalent to VP1000C.

Component **Manufacturer / Model**

3 = three grades
4 = four grades
5 = five grades
B = Number of sides
1 = one side
2 = two sides
C = Number of columns
1 = one column
2 = two columns

Wayne Vista Series

Healy Kit VP1000T[11] & VP1000V[12]

Model#'s Description:
prefix/VXXXYZ/suffix
Where:
Prefix= Any number or letter
V = Vista
X = Any digit
Y = D or P
D = remote dispenser type for delivering fuel
P = suction pump for delivering fuel
Z = 1, 3, 4, 5, 6, 7 or 8
Suffix= D1 or D2, and any combination of number(s) or letter(s)

Wayne Global Century & Select Series[13]

Model#'s Description
3/GABCDE/Suffix
Where:
A = Model Series
2 = Global Century
7 = Select
B = Cabinet Style
2 = Column Style
C = Flow Rate Capacity
0 = Standard Flow
4 = Twin I, Dual Filters

[11] Kit used to install Healy components to 3V and 4V Vista series dispenser. VP1000T previously sold as equivalent to VP1000C.
[12] Kit used to install Healy components to 1V and 2V Vista series dispenser. VP1000V previously sold as equivalent to VP1000F.
[13] Dispenser configuration only available for purchase from Dresser Wayne. There is no Kit for retrofit of these dispenser types.

Component	Manufacturer / Model

D = Number of Hoses & Orientation
- 1 = Single, Island-Oriented
- 2 = Twin I, Island-Oriented
- 3 = Twin II, Island-Oriented
- 7 = Twin I, Lane-Oriented OR Single Side, Lane-Oriented w/ "R" Suffix
- 8 = Twin II, Lane-Oriented

E = Dispenser Type
- D = Dispenser-Remote

Suffix = Any combination of letters or numbers

Wayne Reliance Series[14]

Model#'s /GABCDE/Suffix	Description

Where:

A = Model Series
- 5 = Reliance Mechanical Fleet – Pricing
- 6 = Reliance Mechanical Fleet – Volume Only

B = Cabinet Style
- 2 = Column Style

C = Flow Rate Capacity
- 0 = Standard Flow

D = Number of Hoses & Orientation
- 1 = Single, Island-Oriented
- 2 = Twin I, Island-Oriented
- 3 = Twin II, Island-Oriented

E = Dispenser Type
- D = Dispenser-Remote

Suffix = Any combination of letters or numbers

[14] Dispenser configuration only available for purchase from Dresser Wayne. There is no Kit for retrofit of this dispenser type.

Component	Manufacturer / Model	
	FFS/Healy Universal Retrofit Manual[15]	
	Healy Kits	VP1000A[16] VP1000D[17] VP1000G[18] VP1000H[19] VP1000J[20] Z071V[21] Z070E[22] Z008[23] Z009[24]

TABLE 1
Components Exempt from Identification Requirements

Component Name	Manufacturer	Model Number
Dispenser Kit	Healy	VP1000A & VP1000B VP1000D VP1000G VP1000H VP1000J VP1000M VP1000N VP1000P VP1000Q VP1000R VP1000S VP1000T VP1000V Z008 Z009 Z070E Z071V

[15] Any dispenser not currently listed in Exhibit 1 can be upgraded to Healy EVR using one of the kits listed in this section.
[16] Kit contains Universal Wire Harness for use in any dispenser make or model. For use with any VAC or VDC solenoid valves. VP1000A previously sold as equivalent to VP1000B.
[17] Early Gilbarco Encore 300 Blender Dispensers – 120 VAC valves (mfg. before 04/2003).
[18] Wayne DL Non-Blender Dispensers – 120 VAC valves.
[19] Tokheim Premier C Blender Dispensers – 24 VDC valves.
[20] Early Tokheim Blender Dispensers – Combination 120 VAC & 24 VDC valves.
[21] Universal Vapor Kit.
[22] Universal Electrical Kit.
[23] Standard Low Profile Single Hose Dispenser Retrofit Kit.
[24] Standard Low Profile Dual Hose Dispenser Retrofit Kit.

Maintenance Tracker Kit (Optional)

Veeder-Root 330020-546

Consists of the following:

- Maintenance Tracker Technician Key (Figure 1-17)
- Interface Module RS232/485 Dual Module with DB9 Converter or Single Port Module with DB-25 converter (Figure 1-18)
- Manual

Healy Model 900 EVR Nozzle

FIGURE 1-1
Healy Model 900 EVR Nozzle
(Drawing)

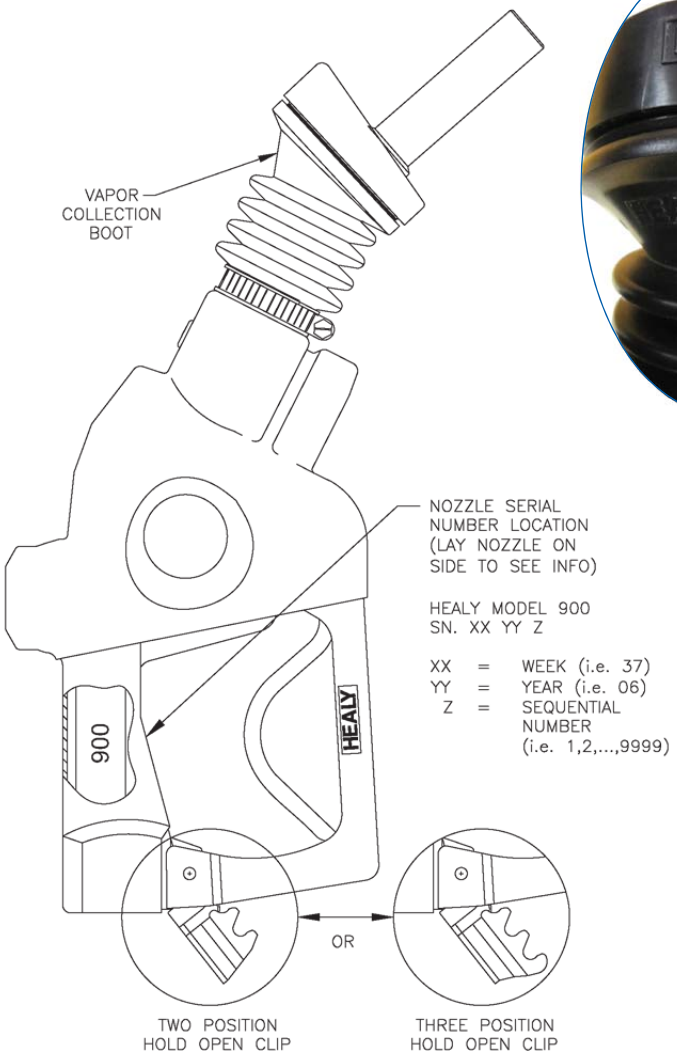

FIGURE 1-2
Healy Model 900 EVR Nozzle
(Image)

FIGURE 1-3
Healy Model 9961 Clean Air Separator

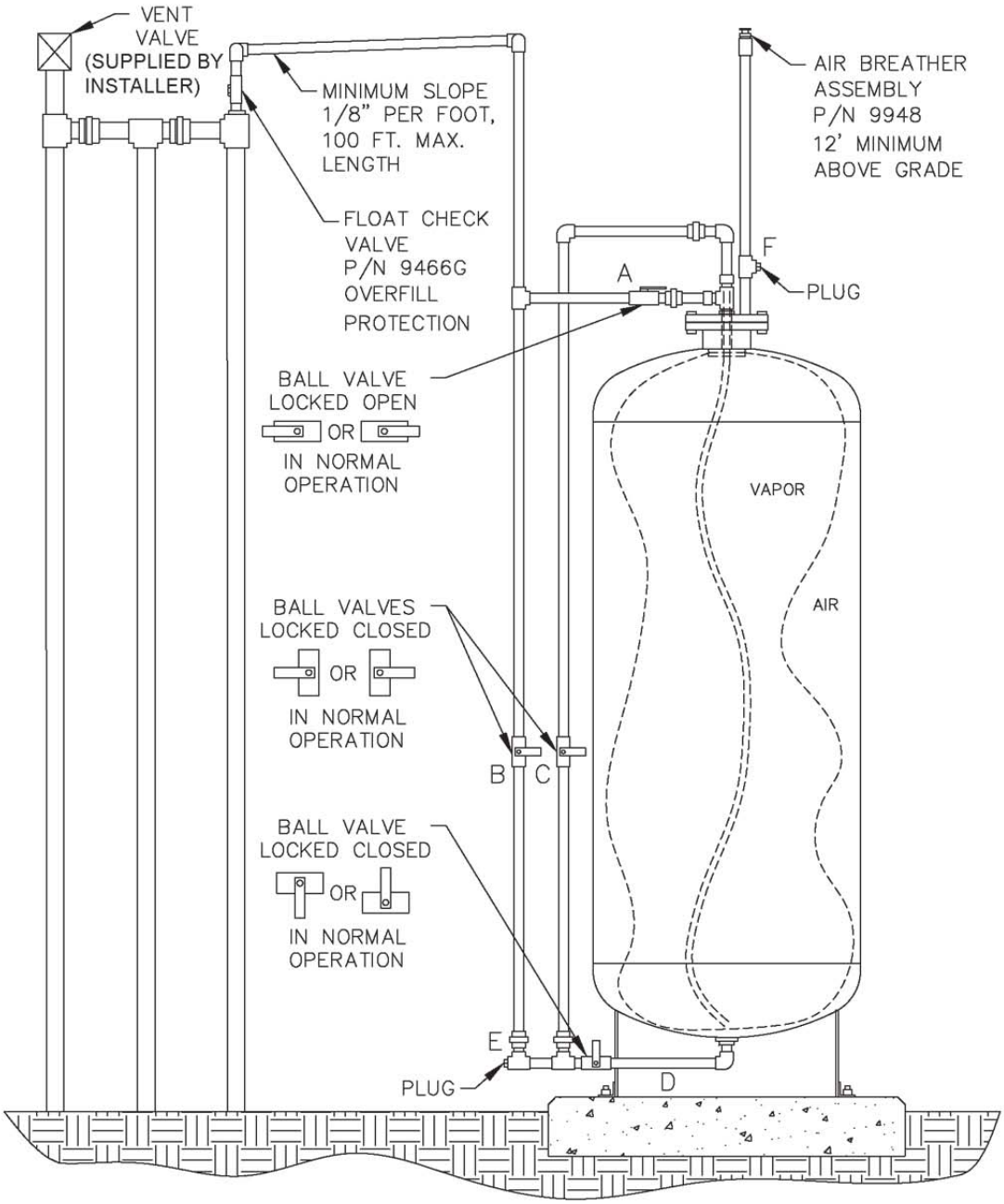

FIGURE 1-3H
Healy Model 9961H Clean Air Separator

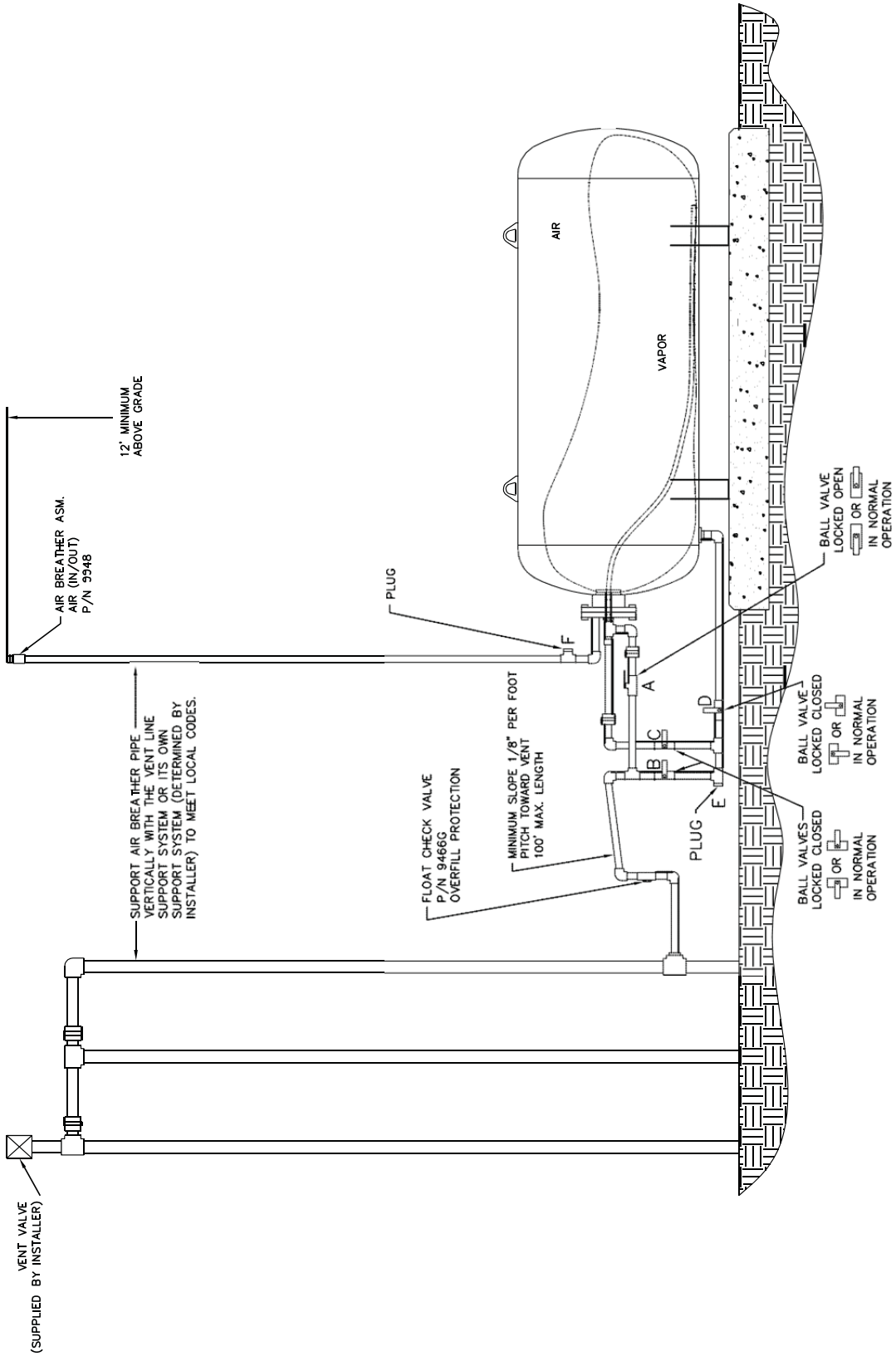

FIGURE 1-4
Healy Model 9961 Clean Air Separator

FIGURE 1-4H
Healy Model 9961-H Clean Air Separator

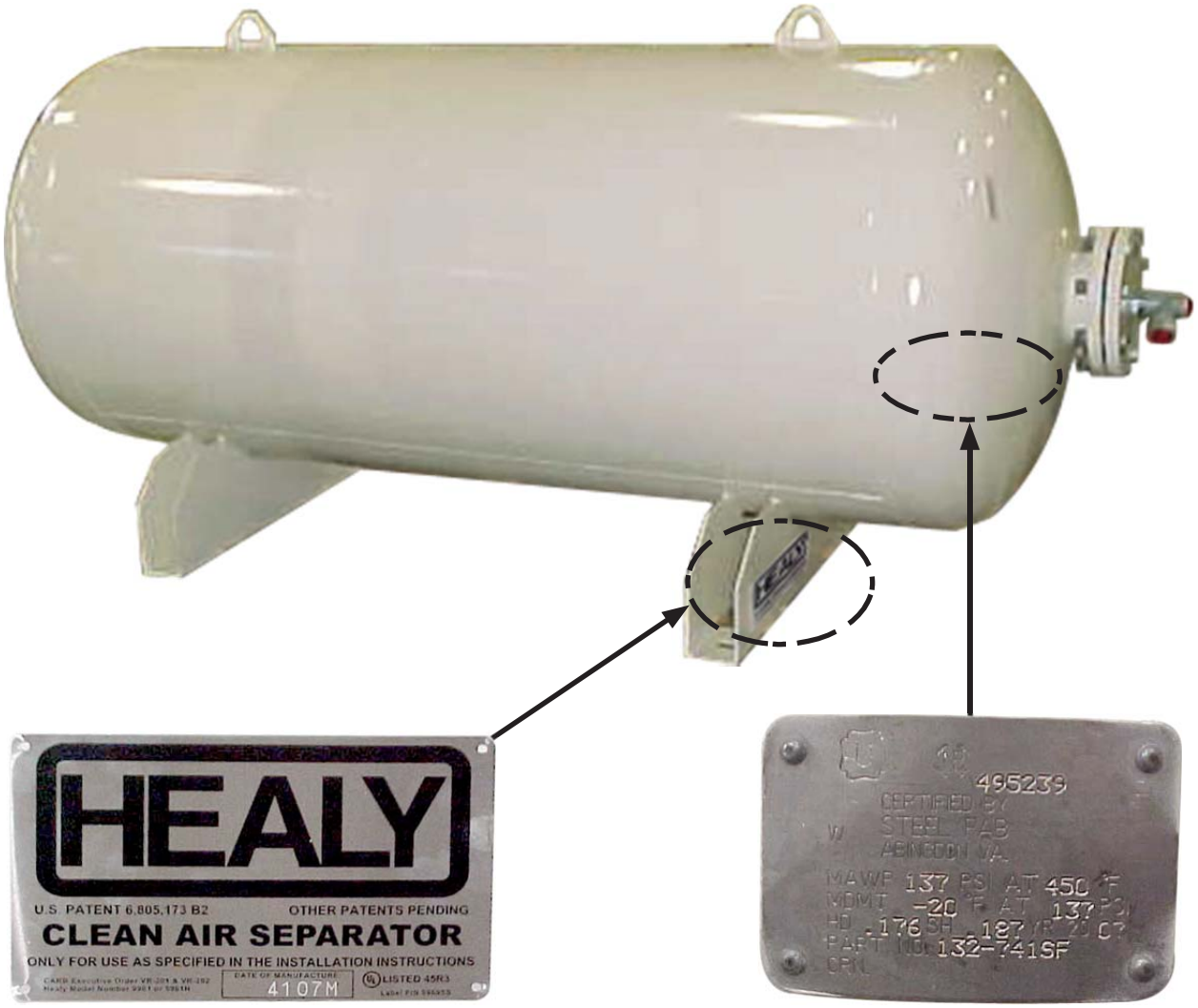

Clean Air Separator Name Plate

Clean Air Separator Data Plate
(not pictured on far side of base)

Figure 1-5a
Healy Model 75 Series Low Permeation Hose Assembly

Figure 1-5b
Veyance Futura HVR Low Perm Series Hose

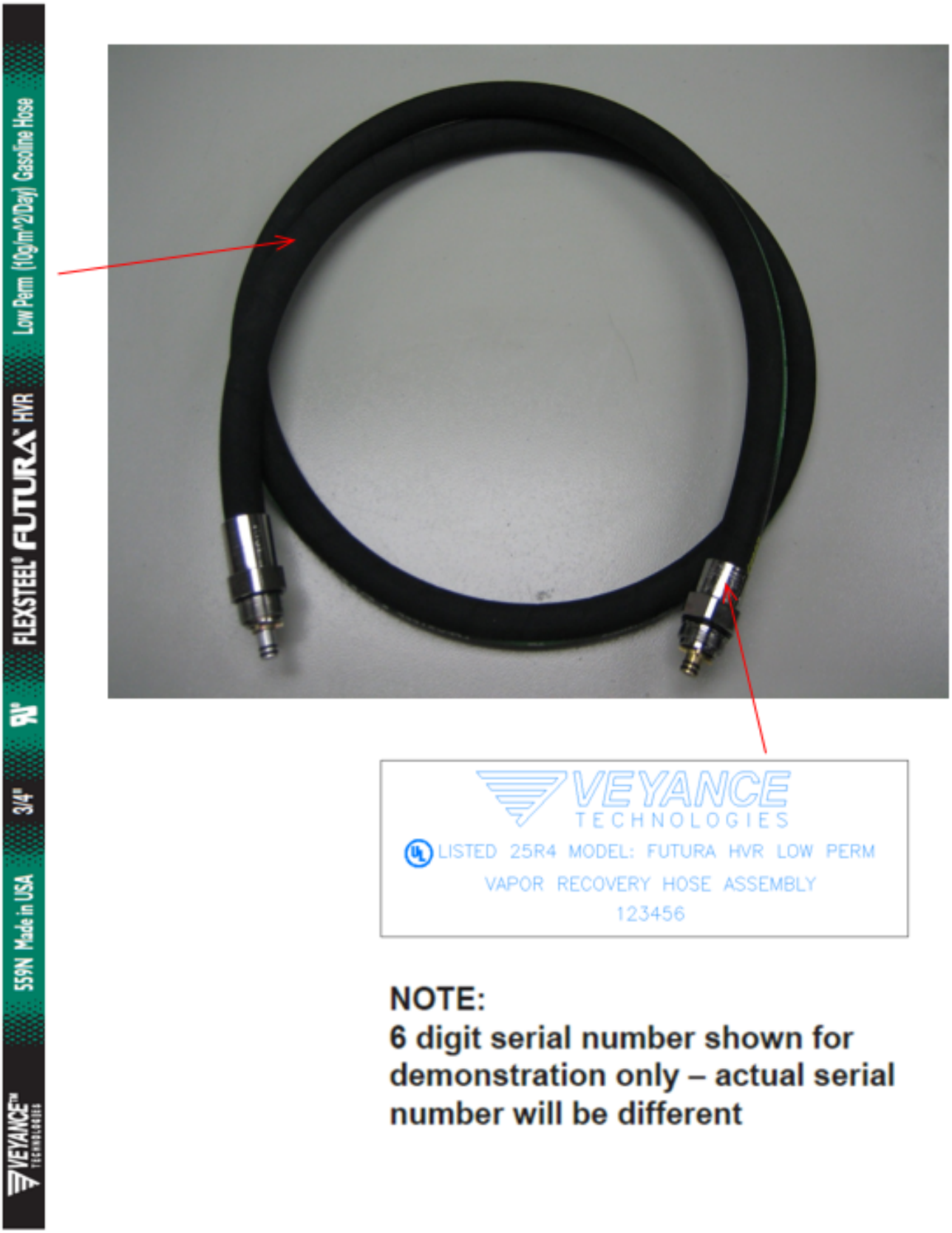

NOTE:
6 digit serial number shown for demonstration only – actual serial number will be different

FIGURE 1-6
Hanging Hardware Selection Options
Breakaway and 1301 Flow Limiter

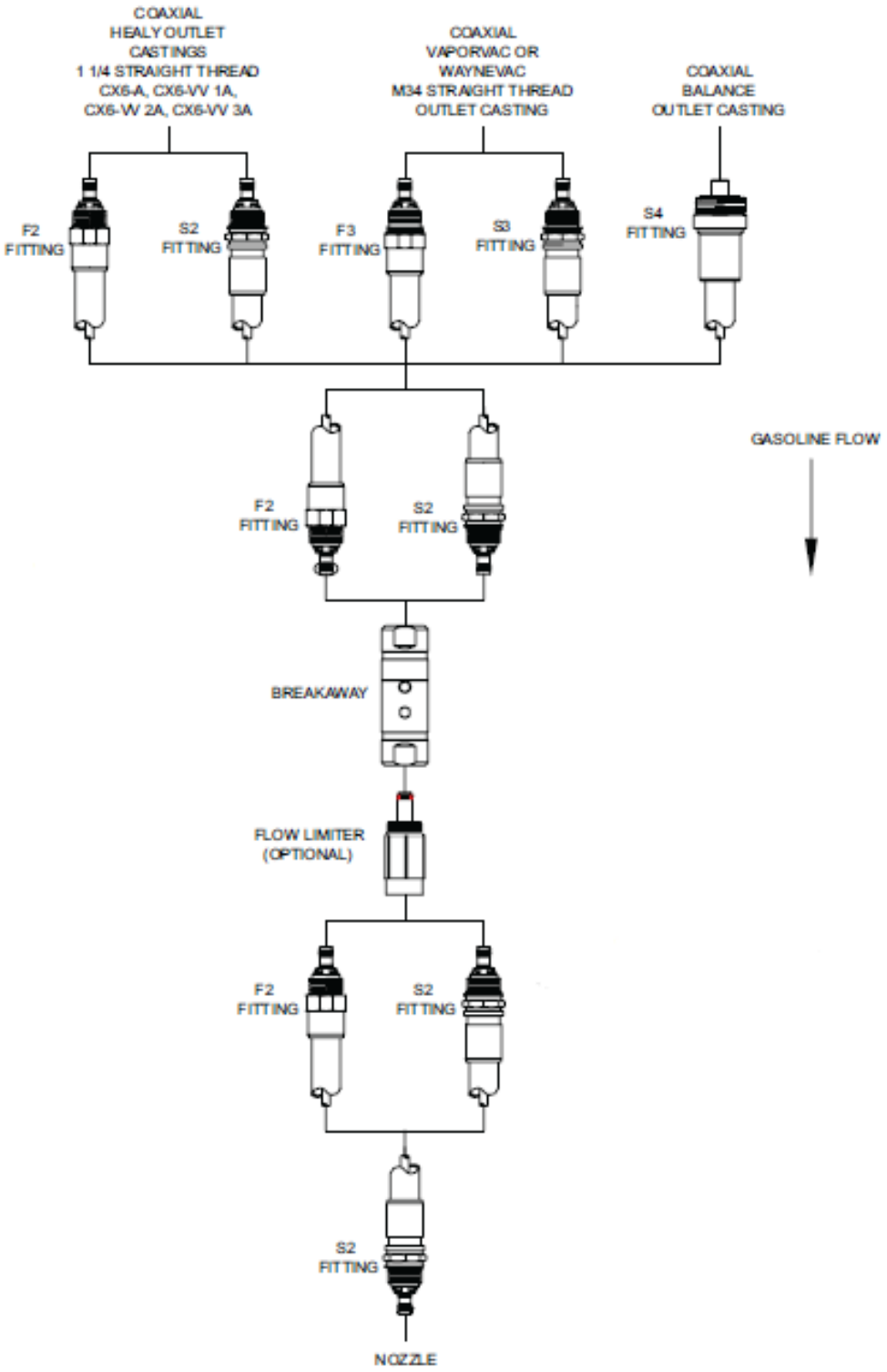

FIGURE 1-7
Hanging Hardware Selection Options
Model 807 Swivel Breakaway and 1302 Flow Limiter

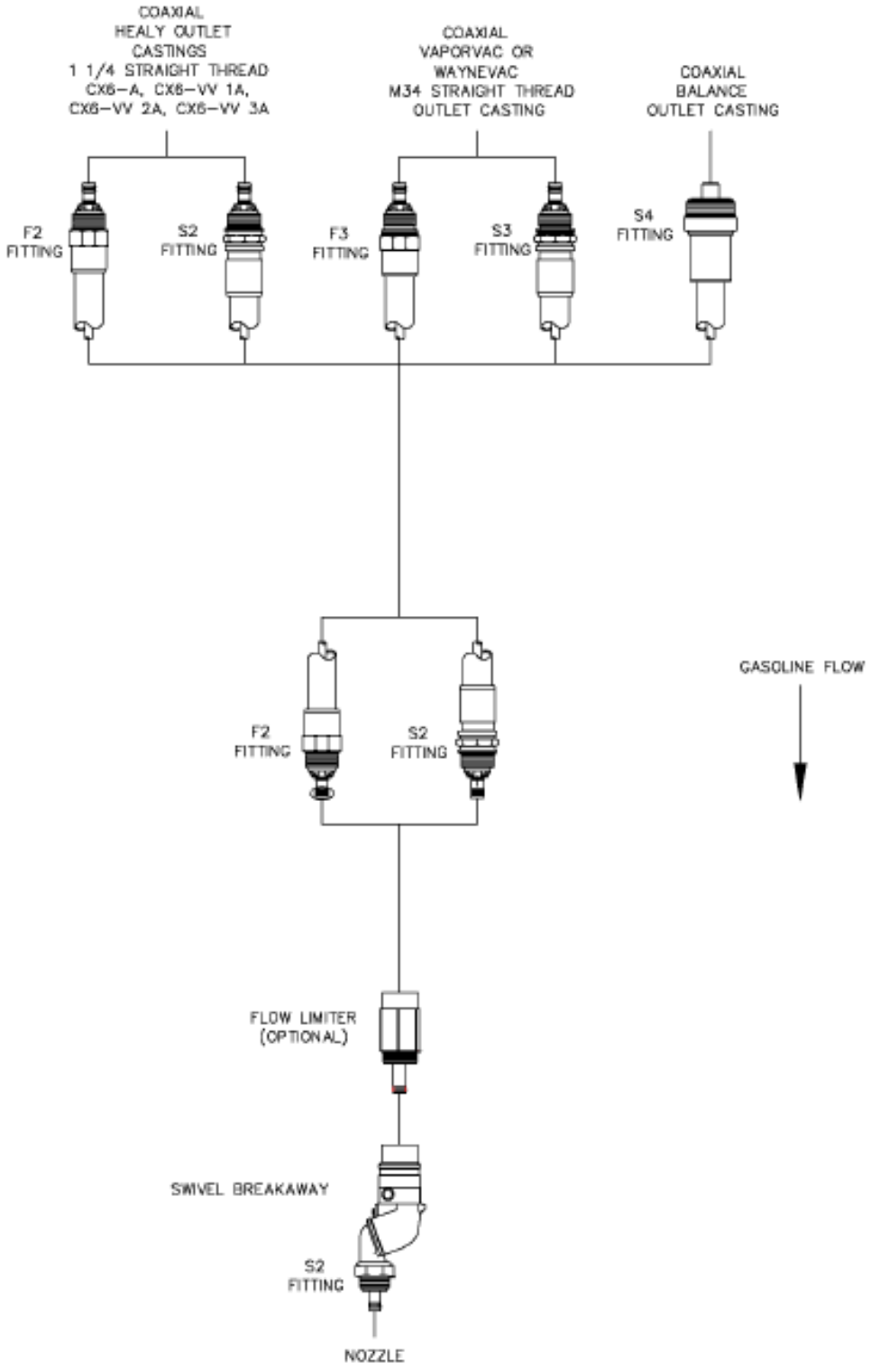

Dispenser Conversion Adaptors

FIGURE 1-8
Healy Model CX6-A

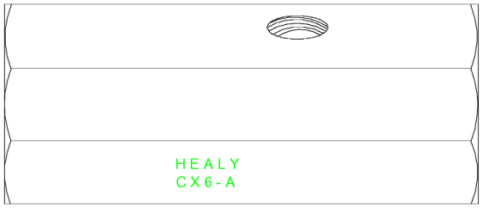

FIGURE 1-8
Healy Model CX6-A

FIGURE 1-8
Healy Model CX6-VV1A

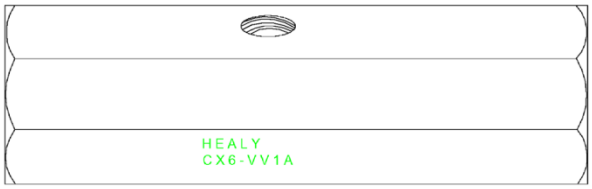

FIGURE 1-8
Healy Model CX6-VV2A

Dispenser Conversion Adaptors

FIGURE 1-9
Healy Model CX6-VV3A

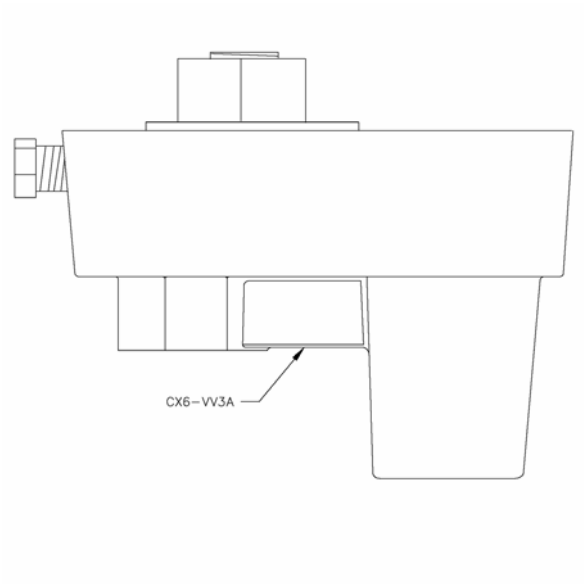

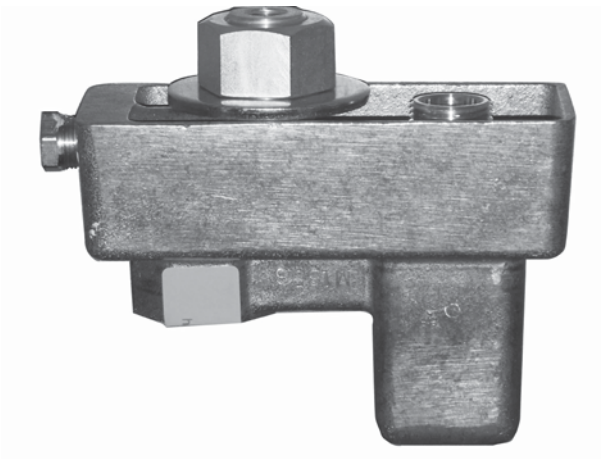

FIGURE 1-9
EBW Model 303-301-01

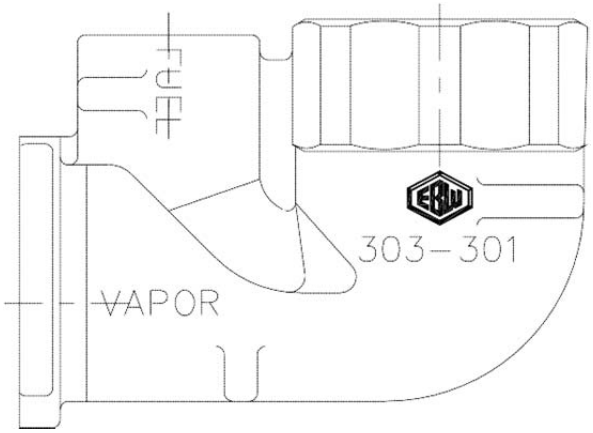

Healy Model 8701VV Breakaway

FIGURE 1-10a

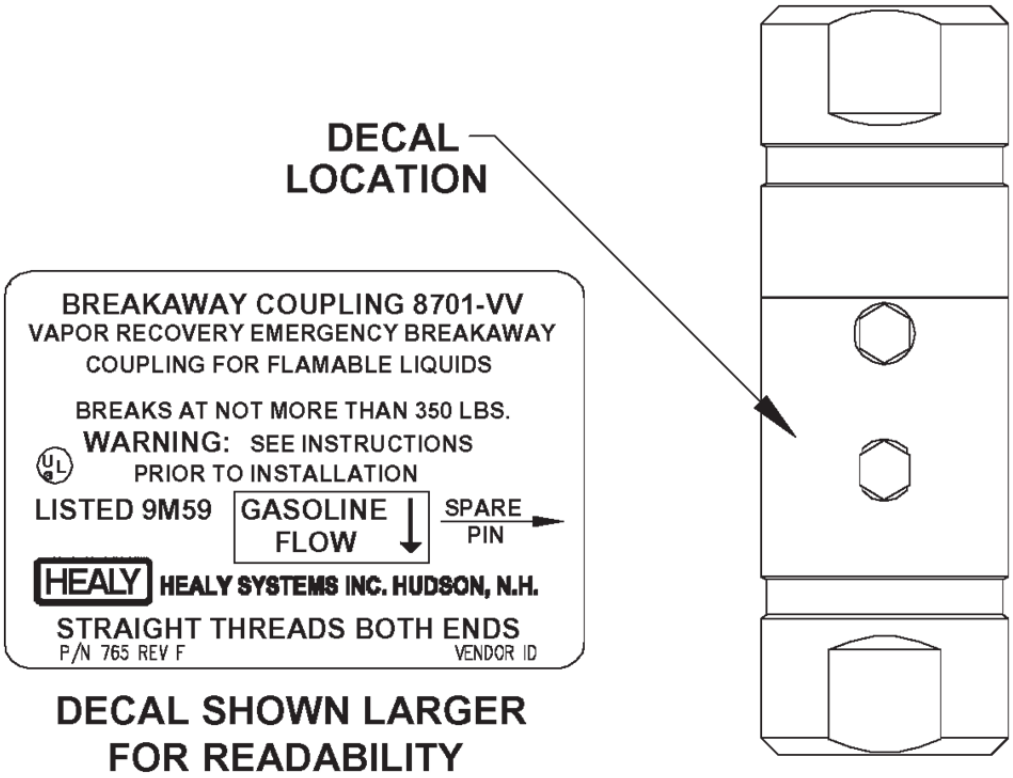

Healy Model 807 Swivel Breakaway

FIGURE 1-10b

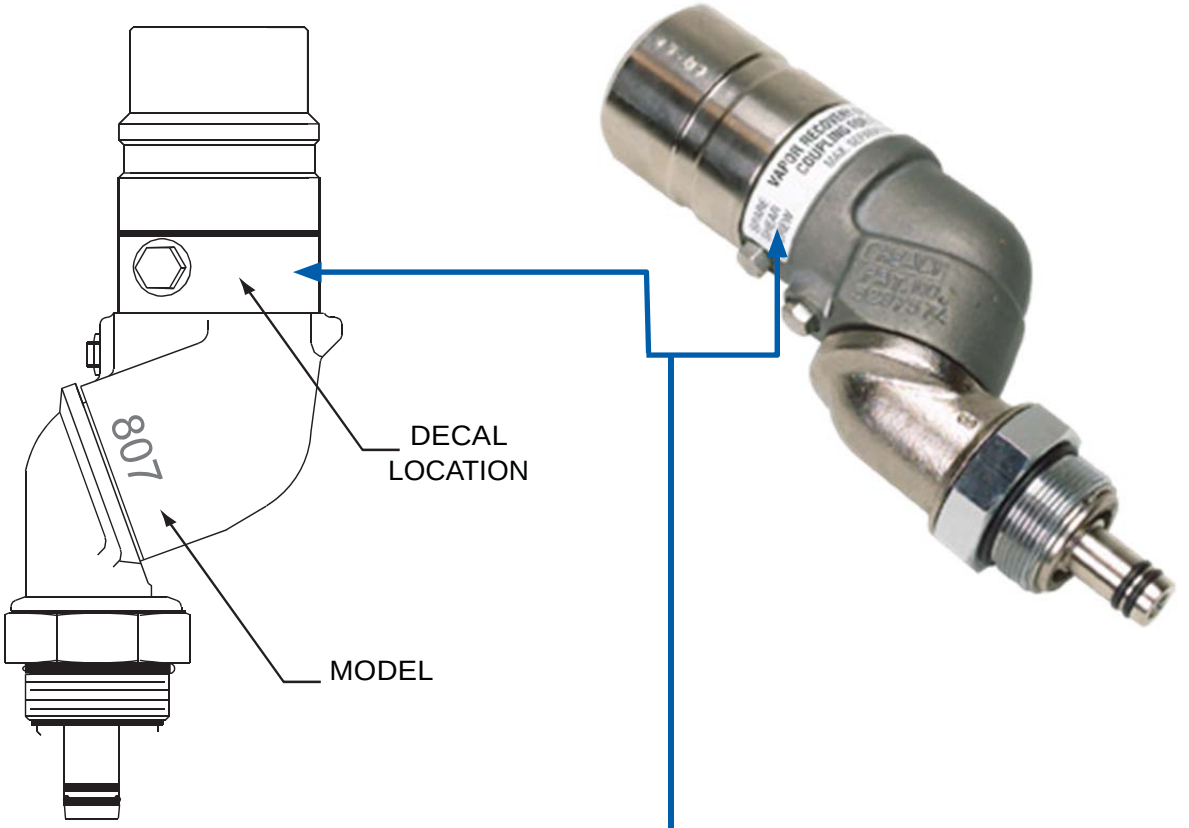

FLOW
STRAIGHT THDS.
BOTH ENDS
VAPOR RECOVERY EMERGENCY BREAKAWAY
COUPLING FOR FLAMMABLE LIQUIDS
MAX. SEPARATION FORCE 350#
FRANKLIN FUELING SYSTEMS MADISON WI
LISTED 9M59
MODEL
807
SPARE
SHEAR
SCREW
LBL P/N 893

FLOW
STRAIGHT THDS.
BOTH ENDS
VAPOR RECOVERY EMERGENCY BREAKAWAY
COUPLING FOR FLAMMABLE LIQUIDS
MAX. SEPARATION FORCE 350#
LISTED 9M59
MODEL
807
Healy Systems Inc. Hudson, N.H. 03051
SPARE
SHEAR
SCREW
LBL P/N 893

DECALS SHOWN LARGER FOR READABILITY

EITHER LABEL MAY APPLY

Catlow Model CTMCA Breakaway

FIGURE 1-10c

VST Model VST-HEVR-SBK Breakaway

FIGURE 1-10d

FIGURE 1-11
Healy Model 1301 Flow Limiter

FIGURE 1-12
Healy Model 1301 Flow Limiter

FIGURE 1-13
Healy Model 1302 Flow Limiter

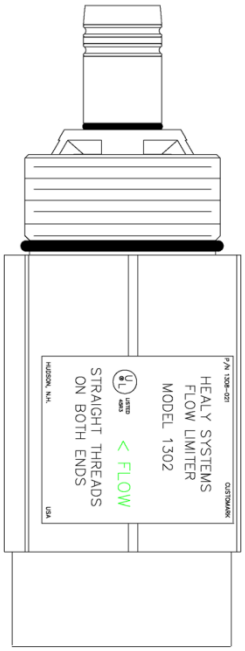

FIGURE 1-14
Healy Model 1302 Flow Limiter

FIGURE 1-15
Healy Model VP1000 Vacuum Pump

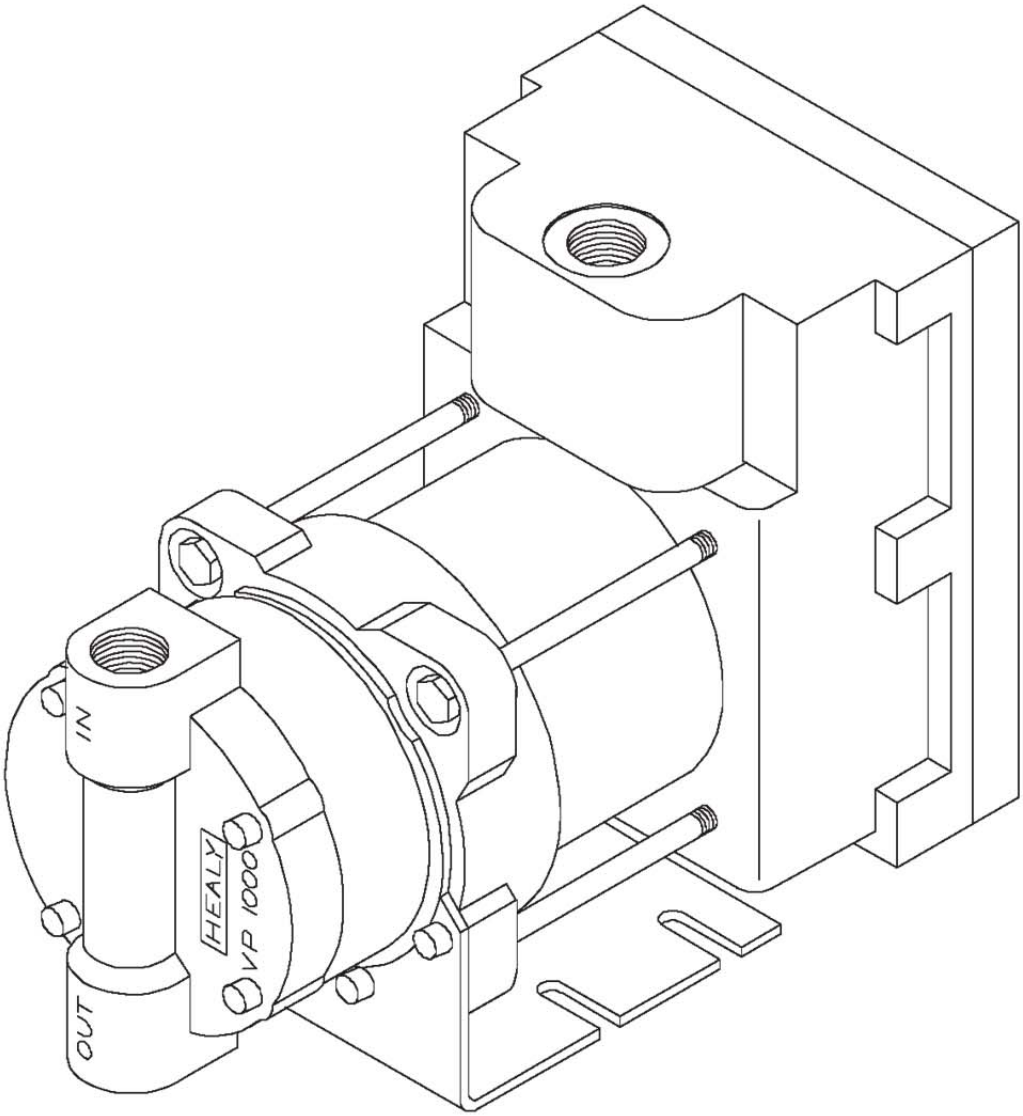

FIGURE 1-16
MC 100 Control Module

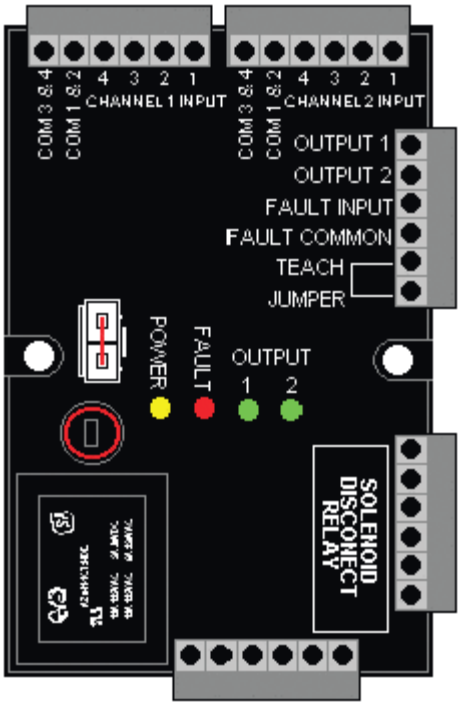

FIGURE 1-17
Maintenance Tracker Technician Key

FIGURE 1-18
Interface Module RS232/485
Dual Module with DB9 Converter or
Single Port Module with DB-25 converter

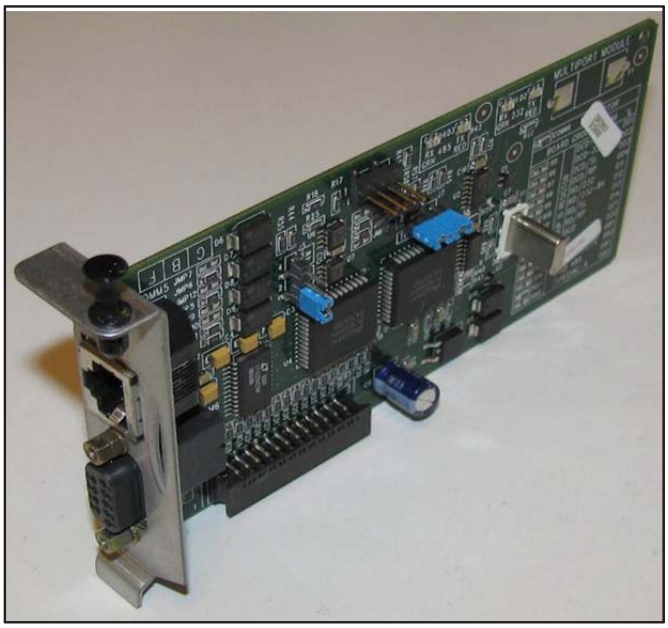

Part 2 - Vapor Equipment List for Liquid Condensate Trap
Figures 1A-LCT-1 and 1A-LCT-2

Component	Manufacturer/Model
Riser Adapter	INCON model TSP-K2A
In-Line Filter	140 micron, Swagelok B-4F2-140 or SS-4F2-140, or equivalent
Screen	Aluminum Insect screen (18X14 mesh), or Stainless Steel Insect screen (18X18 mesh).
Stainless Steel Hose Clamp	Sized to secure screen to suction tube.
Liquid Sensor [1]	Must have an audible and visual alarm
Liquid Condensate Trap[1]	Any capacity, manufacturer, make and model

[1] Must meet applicable State Water Resources Control Board requirements (*e.g.* LG-113, LG-167 and LG-169) and any local authority having jurisdiction which includes the Certified Unified Program Agency (CUPA).

FIGURE 1A-LCT-1
Typical Liquid Condensate Trap Installed Below the Transition Sump

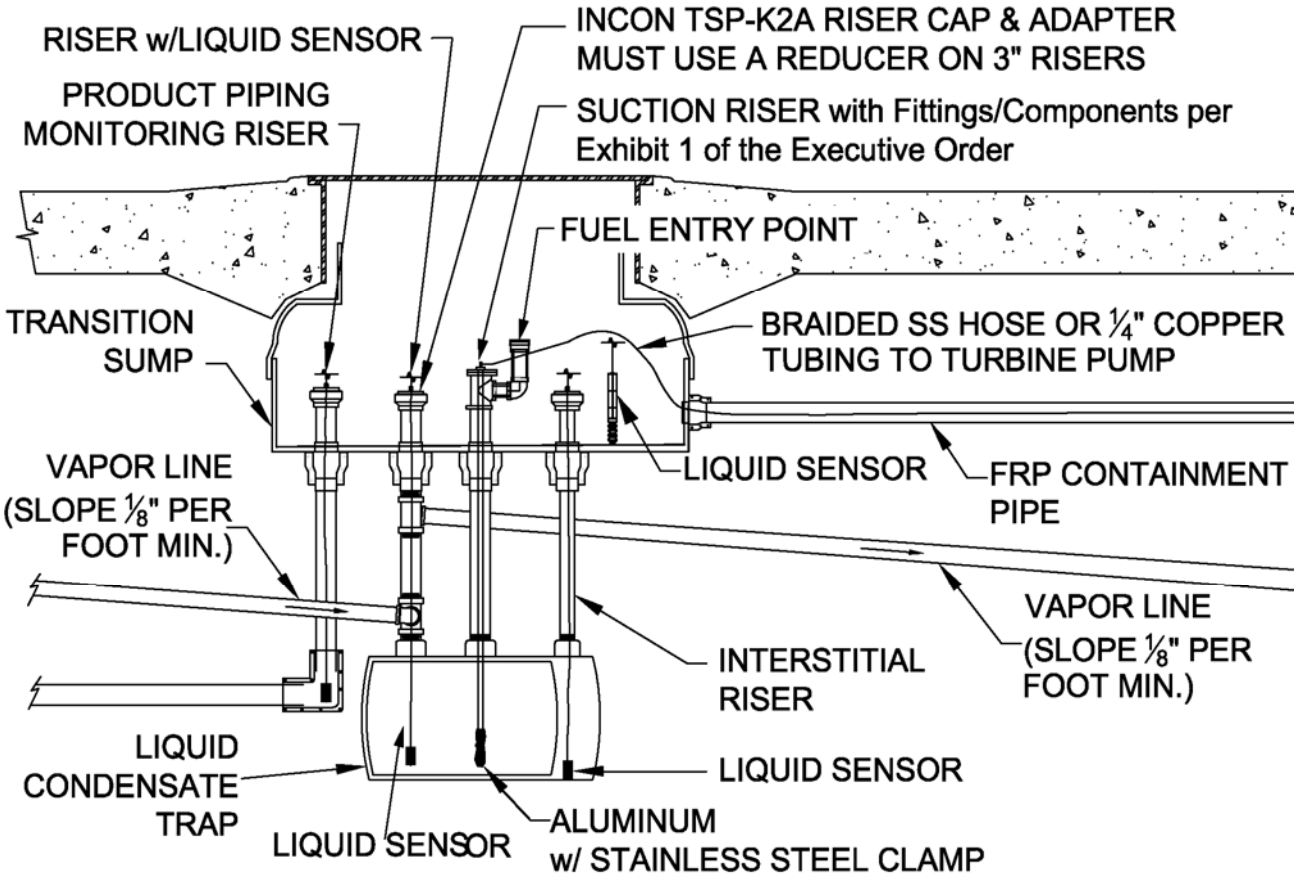

FIGURE 1A-LCT-2
Typical Liquid Condensate Trap Installed Inside the Transition Sump

Note: A Liquid Condensate Trap installed inside a liquid AND vapor tight transition sump that is monitored with a liquid sensor can be single walled (if installed before July 1, 2004).

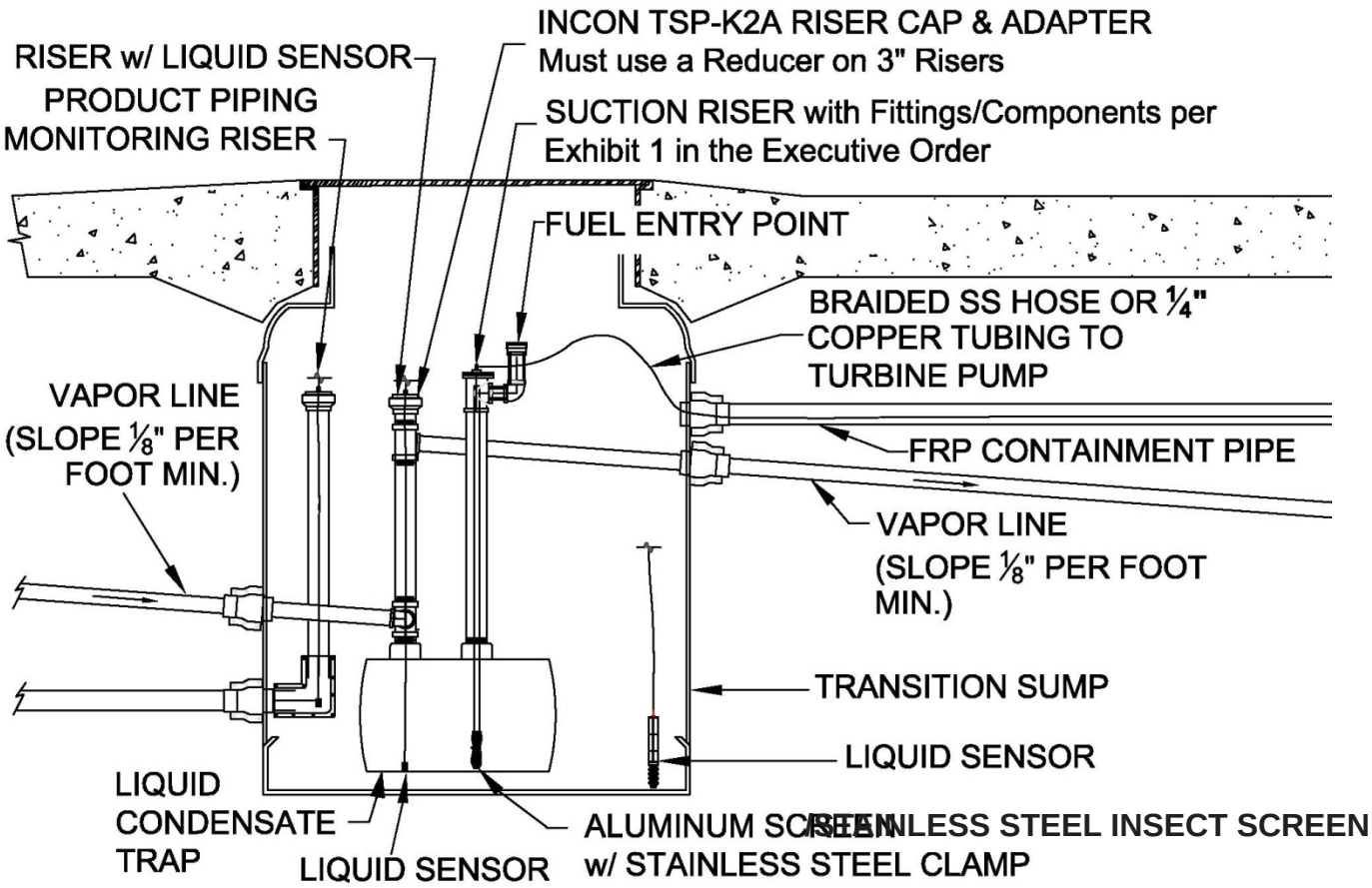

SECTION II - In-Station Diagnostics

Option 1 - Veeder-Root Equipment (VR)

Component	Manufacturer/Model
TLS Console	
	TLS-350 TLS-350 Plus TLS-350R Red Jacket ProMax Gilbarco EMC Simplicity
	Veeder-Root 8482XX-XXX Veeder-Root 8470XX-XXX X = Any digit (Figure 1-ISD-VR-1)
ISD Software Version	
	Veeder-Root ISD 1.05 (Required for new installations and facilities undergoing major modification)
	Refer to Table 1-ISD –VR-1, Veeder-Root ISD Software Version Compatibility Matrix
Vapor Flow Meter (1 per Dispenser)	
	Veeder-Root 331847-XXX X = Any digit (Figure 1-ISD-VR-2)
Vapor Pressure Sensor (1 per GDF)	
	Veeder-Root 331946-001 Wired, approved for installation in the dispenser or on the vent stack (Figure 1-ISD-VR-3a)
	OR
	Veeder-Root 861190-201 Low Powered Wireless, approved for installation on the vent stack **ONLY** (Figure 1-ISD-VR-3b)

Component	Manufacturer / Model
Vapor Pressure Sensor Desiccant Tube (optional) (1 per GDF)	Veeder-Root 330020 – Dryer Tube Figure (1-ISD-VR-3c)
Dispenser Interface Module (DIM)	Veeder-Root DIM Series (Figure 1-ISD-VR-4)
RS232 Interface Module	Veeder-Root RS232 Interface Module Series (Figure 1-ISD-VR-5)
RF Receiver-2 (optional)[1] (1 per GDF)	Veeder-Root 332440-029 (Figure 1-ISD-VR-6 and Figure 1-ISD-VR-7)
RF Repeater-2 (optional)[1] (1 per GDF)	Veeder-Root 332440-030 (Figure 1-ISD-VR-6 and Figure 1-ISD-VR-7)
RF Transmitter-2 (optional)[1] (1 per Dispenser)	Veeder-Root 332235-016 (Figure 1-ISD-VR-6 and Figure 1-ISD-VR-7)
RF Battery Pack (optional)[1] (1 per Transmitter)	Veeder-Root 332425-011 (Figure 1-ISD-VR-6 and Figure 1-ISD-VR-7)
TLS RF Console-2 (optional)[1] (1 per GDF)	Veeder-Root 332242-002 (Figure 1-ISD-VR-6 and Figure 1-ISD-VR-7)

[1] Optional wireless components for Veeder-Root Vapor Flow Meter

TABLE 1-ISD-VR-1
Veeder-Root ISD
Software Version Compatibility Matrix

Software Version*	Option		
	Dispenser Shutdown*** and Collection Monitroing Update	Wireless Components	Maintenance Tracker
1.01			●
1.02			●
1.03	●		●
1.04	●	●	●
1.05**	●	●	●

* Software Version 1.01 has been revoked for GDF's equipped with multiproduct (six pack) dispensers with fuel blending. Subject GDFs must upgrade to higher version software (1.02, 1.03, 1.04, or 1.05) by 07/01/2012.

** For new installations ISD software version 1.05 is compatible with all processors listed in this EO. For existing installations, refer to the above software compatibility matrix. With the exception of multiproduct (six pack) dispensers with fuel blending, software Versions 1.01, 1.02, 1.03, and 1.04 may remain in use at existing GDFs.
Software Version 1.05 must be installed at new GDFs or those undergoing a major modification as determined by date when the district issues the permit to construct.

*** Dispenser shutdown can be achieved by alternate means for GDFs equipped with Software Version 1.01 and 1.02 as indicated in the ARB approved IOM for the Veeder-Root ISD System.

FIGURE 1-ISD-VR-1
Veeder-Root 8482XX-XXX Veeder-Root 7470XX-XXX

Standard TLS Console

FIGURE 1-ISD-VR-2
Vapor Flow Meter
Veeder-Root 331847-XXX

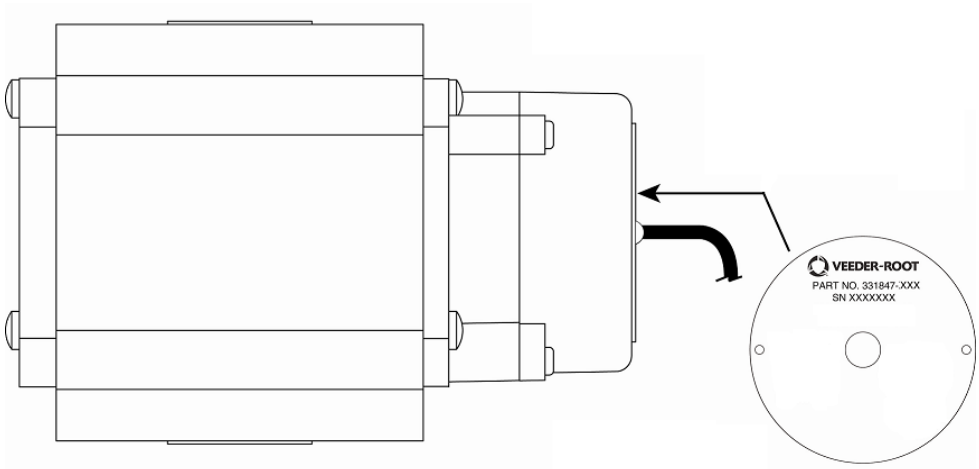

FIGURE 1-ISD-VR-3
Vapor Pressure Sensor

FIGURE 1-ISD-VR-3a
Veeder-Root 331946-001
Wired Vapor Pressure Sensor

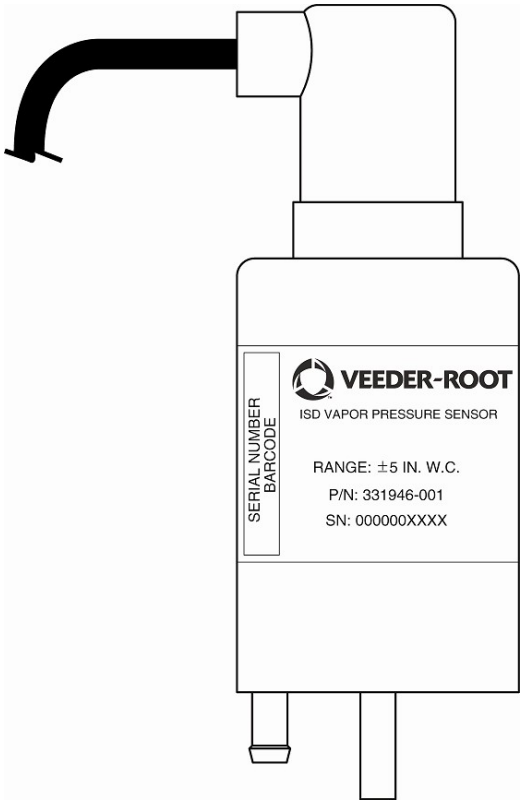

FIGURE 1-ISD-VR-3b
Veeder-Root 861190-201
Low Powered Wireless Vapor Pressure Sensor

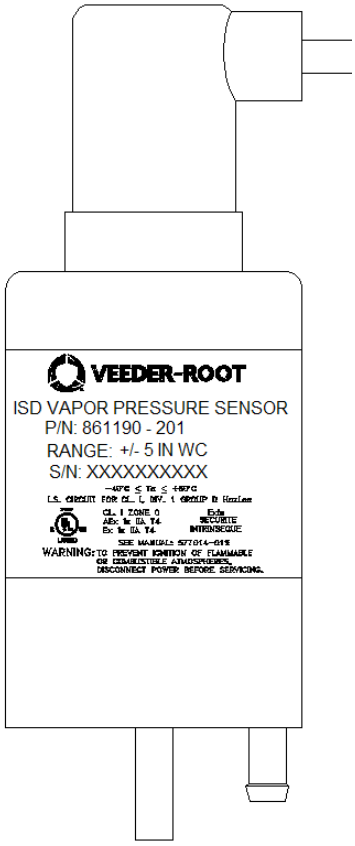

FIGURE 1-ISD-VR-3c
Veeder-Root 330020-717
Dryer Tube (Optional)

FIGURE 1-ISD-VR-4
Dispenser Interface Module (DIM)

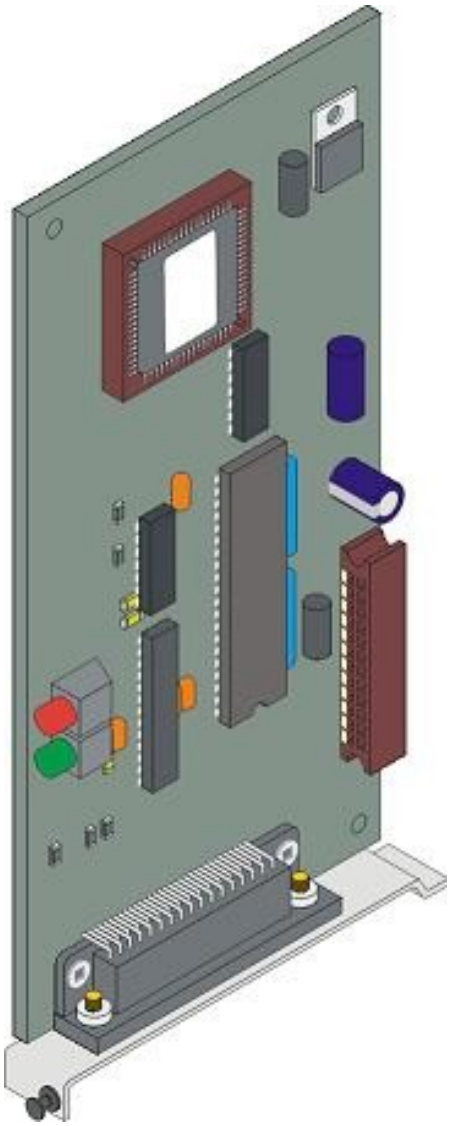

FIGURE 1-ISD-VR-5
RS232 Interface Modules

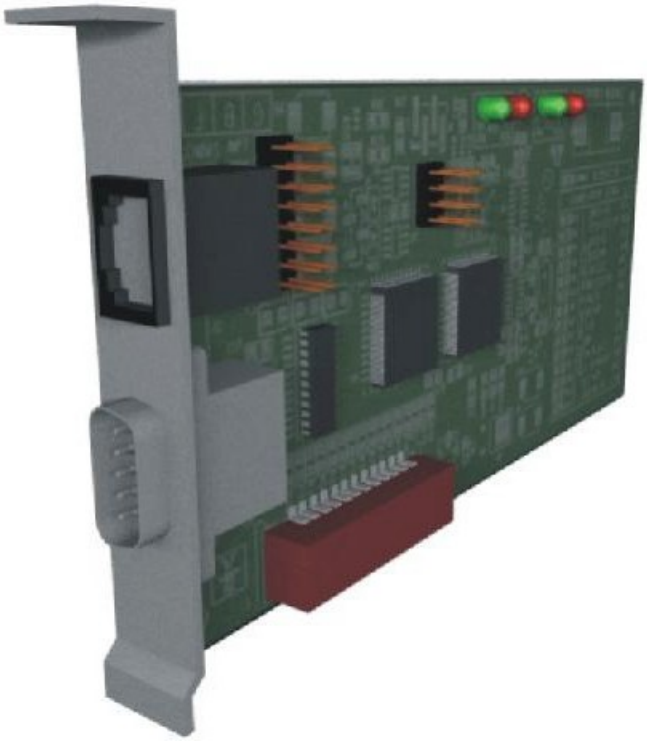

FIGURE 1-ISD-VR-6
Veeder Root Optional Wireless Components

RF Receiver-2

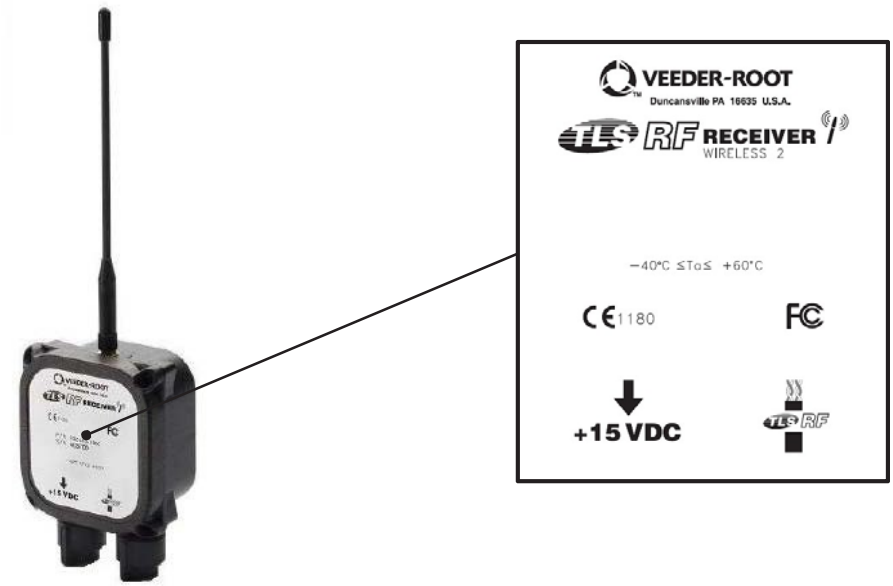

RF Repeater-2

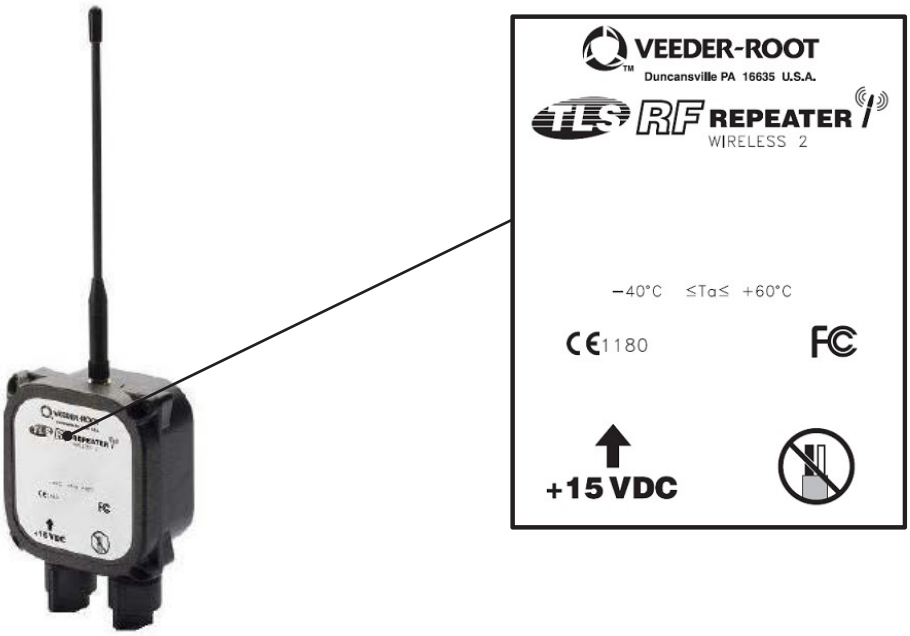

FIGURE 1-ISD-VR-6 (continue)
Veeder Root Optional Wireless Components

RF Transmitter-2

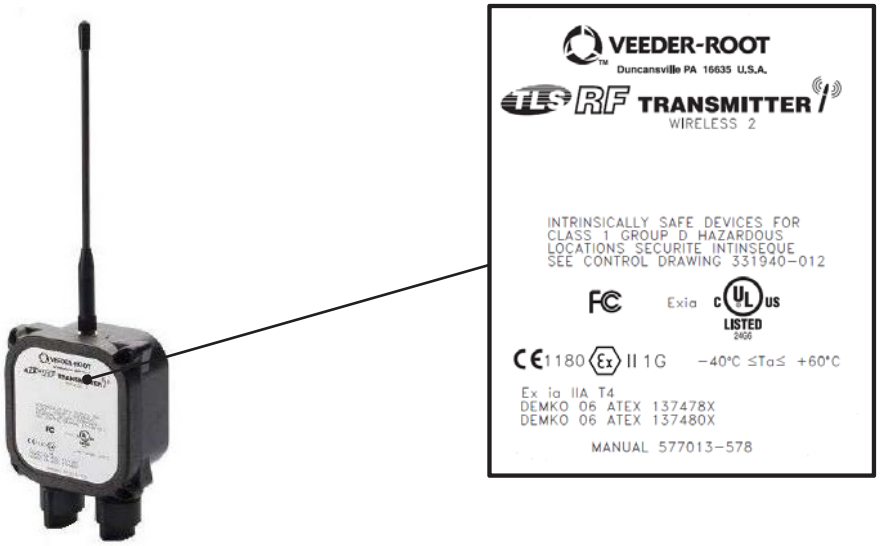

RF Battery Pack

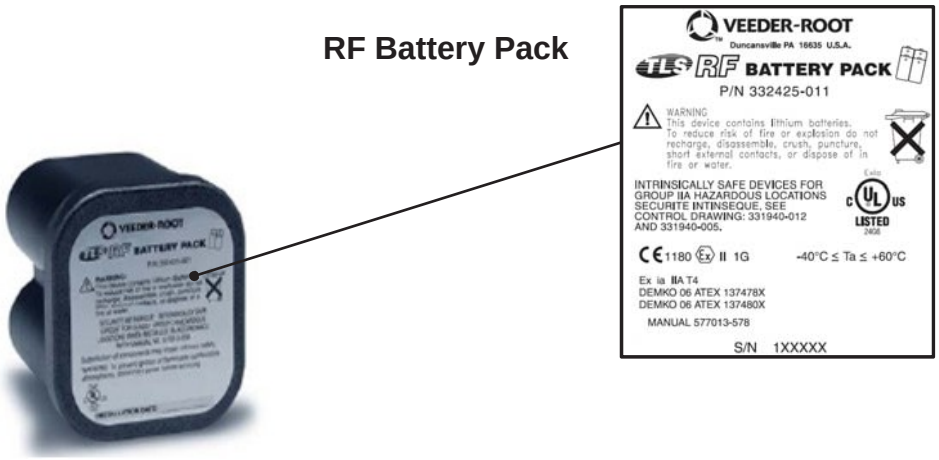

TLS RF Console-2

FIGURE 1-ISD-VR-7
TLS RF Wireless System Layout

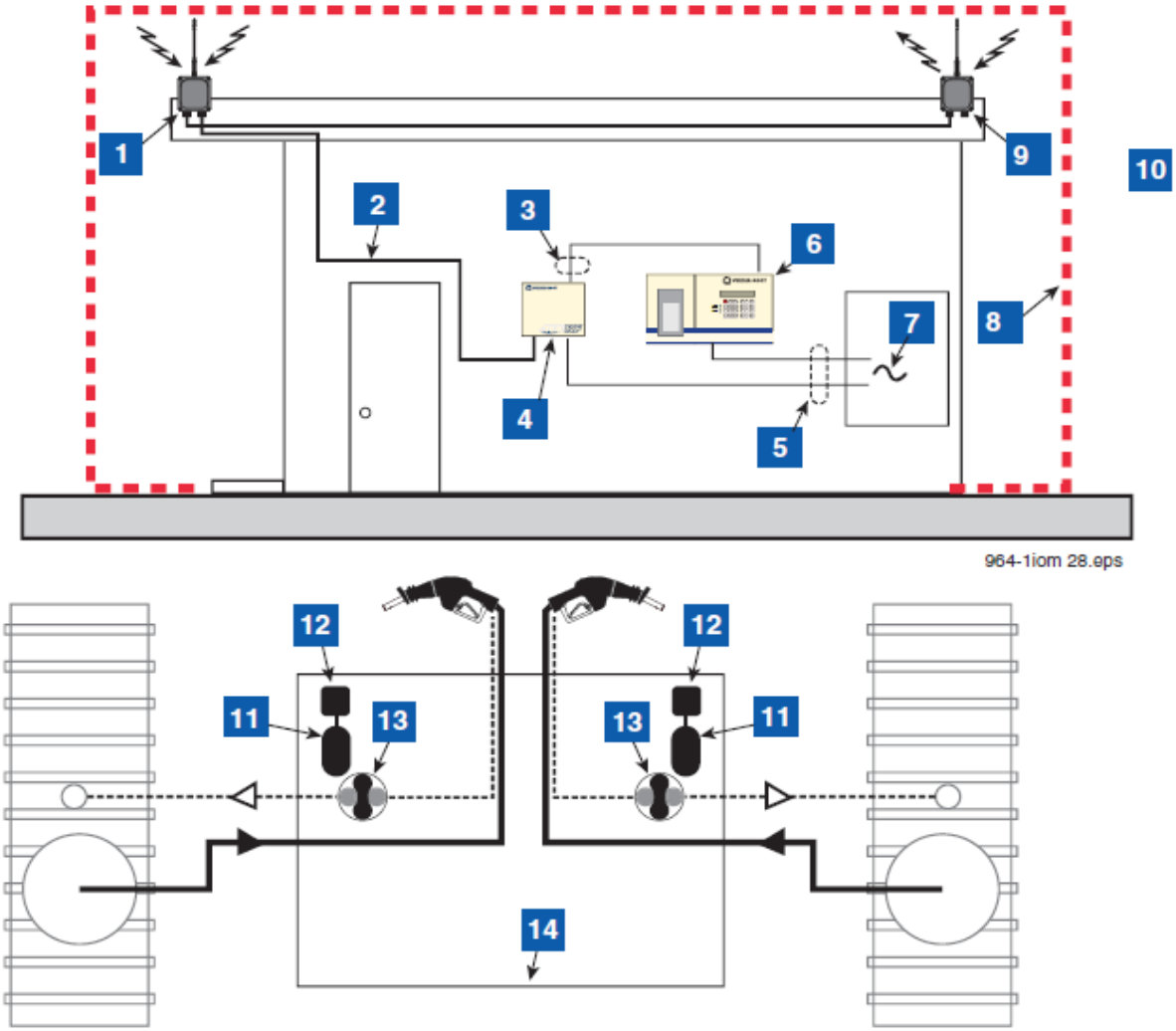

LEGEND FOR NUMBERED BOXES IN Figure 1

To be installed in accordance with the National Electrical Code, NFPA 70 and the Code for Motor Fuel Dispensing Facilities and Repair Garages (NFPA 30A), or other local codes such as the CEC, Canadian Electrical Code.

WARNING! Substitution of components may impair intrinsic safety.

Circuitry within the console barrier forms an intrinsically safe, energy-limited system. This system is intrinsically safe for use in a Class I, Group D hazardous location.

1. Receiver (1 per RF System)
2. RS-485 Cable (Belden #3107A or equiv.)
3. NOTE: Intrinsically safe wiring shall be installed in accordance with Article 504-20 of the NEC, ANSI/ NFPA 70. Max cable length 1000 ft. (304 m).W2 Receiver (1 per RF System)
4. TLS-RF
5. Conduit that enters power wiring knockout.
6. TLS console (Vm = 250 V)
7. 120 or 230 Vac from power panel
8. Non-hazardous area
9. Repeater (1 per RF System)
10. Hazardous area (Class I, Div. 1, Group D)
11. Transmitter
12. Battery pack
13. Vapor Flow meter
14. Dispenser sump

Section II - In-Station Diagnostics

Option 2- INCON Equipment List

Component	Manufacturer/Model
Console	
TS-EMS	INCON / TEMSXXXX/YV Where: X represents hardware option (Example: X can be: 'D' for Display, 'P' for Printer) Y represents software option (Example: Y can be: 'S' for Secondary Containment Monitoring) V represents Vapor Recovery Monitoring Application
TS-550	INCON / T550XXXX/YYYYV
TS-5000	INCON / T5000XXXX/YYYYV Where: X represents hardware option (Example: X can be: 'D' for Display.'P' for Printer) Y represents software option (Example: Y can be: 'T' for Tank Testing) V represents Vapor Recovery Monitoring Application
	(Figure 1-ISD-INCON-1)

Note: All consoles come standard with RS-232 (COMM 1) and Ethernet ports for data access.

Vapor Recovery Monitoring (VRM) Software
INCON / TS-VRM Version 1.2.0

Vapor Flow Meter
(1 per Dispenser) INCON TS-VFM
(Figure 1-ISD-INCON-2)

Vapor Pressure Sensor
(1 per GDF) INCON TS-VPS
(Figure 1-ISD-INCON-3)

Component	Manufacturer / Model
Data Transfer Unit (Optional)[3]	
(1 per dispenser and 1 per GDF)	INCON TS-DTU/P (Figure 1-ISD-INCON-4)
Dispenser Retrofit Kit (Optional)[2]	
(1 per dispenser with DTU)	INCON TS-DRK/x

where x represents Type of Installation Kit

W, Wayne Installation Kit

E, Gilbarco Encore Installation Kit

A, Gilbarco Advantage Installation Kit

T, Tokheim Installation Kit

Thermal Printer Retrofit for TS-EMS and TS-550 with VRM Consoles (Optional)

A. Order Model Number TSSP-TMPTR;

B. ISD Software must be version 1.2.0 or higher; and

C. The Console Firmware must be 1.5.x.xxxx or higher.

[3] Optional installation method for the replacement of dedicated wires to VFM and VPS. Refer to the IOM for more information

FIGURE 1-ISD-INCON-1
INCON TEMSXXXX/YV
INCON T550XXXX/YYYYV
INCON T5000XXXX/YYYYV

FIGURE 1-ISD-INCON-2
INCON TS-VFM
Vapor Flow Meter

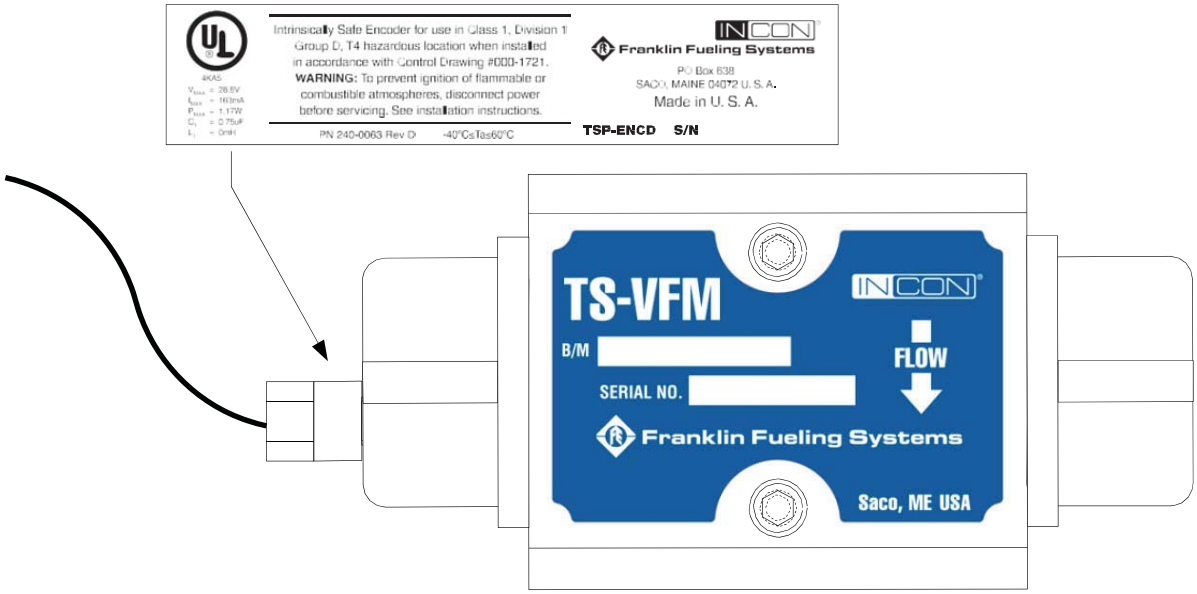

FIGURE 1-ISD-INCON-3
INCON TS-VPS
Vapor Pressure Sensor

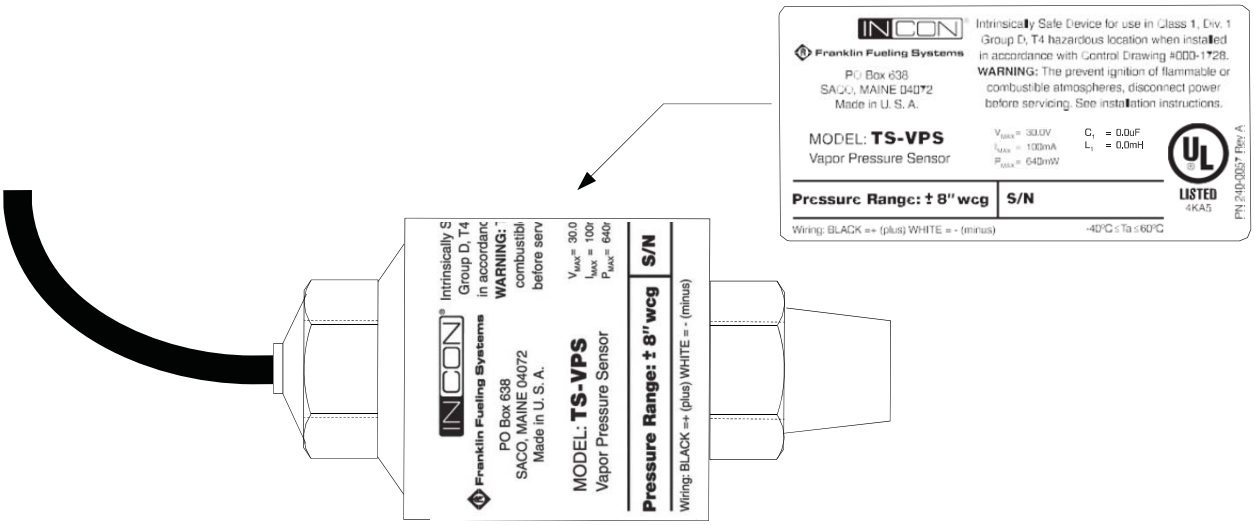

FIGURE 1-ISD-INCON-4
INCON TS-DTU/P
Data Transfer Unit

Label with DTU Serial Number and ID Number