In-Station Diagnostics (ISD)

Install, Setup, & Operation Manual

For Healy Assist EVR

VEEDER-ROOT

Notice

Veeder-Root makes no warranty of any kind with regard to this publication, including, but not limited to, the implied warranties of merchantability and fitness for a particular purpose.

Veeder-Root shall not be liable for errors contained herein or for incidental or consequential damages in connection with the furnishing, performance, or use of this publication.

Veeder-Root reserves the right to change system options or features, or the information contained in this publication as approved by ARB.

This publication contains proprietary information which is protected by copyright. All rights reserved. No part of this publication may be modified or translated to another language without the prior written consent of Veeder-Root. Contact TLS Systems Technical Support for additional troubleshooting information at 800-323-1799.

DAMAGE CLAIMS / LOST EQUIPMENT

Thoroughly examine all components and units as soon as they are received. If any cartons are damaged or missing, write a complete and detailed description of the damage or shortage on the face of the freight bill. The carrier's agent must verify the inspection and sign the description. Refuse only the damaged product, not the entire shipment.

Veeder-Root must be notified of any damages and/or shortages within 30 days of receipt of the shipment, as stated in our Terms and Conditions.

VEEDER-ROOT'S PREFERRED CARRIER

1. Contact Veeder-Root Customer Service at 800-873-3313 with the specific part numbers and quantities that were missing or received damaged.
2. Fax signed Bill of Lading (BOL) to Veeder-Root Customer Service at 800-234-5350.
3. Veeder-Root will file the claim with the carrier and replace the damaged/missing product at no charge to the customer. Customer Service will work with production facility to have the replacement product shipped as soon as possible.

CUSTOMER'S PREFERRED CARRIER

1. It is the customer's responsibility to file a claim with their carrier.
2. Customer may submit a replacement purchase order. Customer is responsible for all charges and freight associated with replacement order. Customer Service will work with production facility to have the replacement product shipped as soon as possible.
3. If "lost" equipment is delivered at a later date and is not needed, Veeder-Root will allow a Return to Stock without a restocking fee.
4. Veeder-Root will NOT be responsible for any compensation when a customer chooses their own carrier.

RETURN SHIPPING

For the parts return procedure, please follow the appropriate instructions in the "General Returned Goods Policy" pages in the "Policies and Literature" section of the Veeder-Root **North American Environmental Products** price list. Veeder-Root will not accept any return product without a Return Goods Authorization (RGA) number clearly printed on the outside of the package.

FCC INFORMATION

This equipment complies with the requirements in Part 15 of the FCC rules for a Class A computing device. Operation of this equipment in a residential area may cause unacceptable interference to radio and TV reception requiring the operator to take whatever steps are necessary to correct the interference.

WARRANTY - Please see next page, iii.

©Veeder-Root 2013. All rights reserved.

Warranty

This warranty applies only when the product is installed in accordance with Veeder-Root's specifications by Veeder-Root certified installers. This warranty will not apply to any product which has been subjected to misuse, negligence, accidents, systems that are misapplied or are not installed per Veeder-Root specifications, modified or repaired by unauthorized persons, or damage related to acts of God. Veeder-Root is not liable for incidental, consequential, or indirect damages or loss, including, without limitation, personal injury, death, property damage, environmental damages, cost of labor, clean-up, downtime, installation and removal, product damages, loss of product, or loss of revenue or profits. This warranty applies to the initial purchaser and any subsequent purchaser for the duration of the warranty period. T**HE WARRANTY CONTAINED HEREIN IS EXCLUSIVE AND THERE ARE NO OTHER EXPRESS, IMPLIED, OR STATUTORY WARRANTIES. WARRANTIES OF MERCHANTABILITY OR FITNESS FOR A PARTICULAR PURPOSE ARE EXPRESSLY EXCLUDED.**

TLS-350R, TLS-350 PLUS, TLS-350J AND TLS-300I/C, AND TLS2 MONITORING SYSTEMS

We warrant that this product shall be free from defects in material and workmanship and is compliant with all applicable performance standards and specifications for which it has been certified, for a period of one (1) year from the date of installation when proof of date of installation is provided or twenty-four (24 months) from the date of manufacture when proof of date of installation is not provided. During the warranty period, we or our representative will repair or replace the product, if determined by us to be defective, at the location where the product is in use and at no charge to the purchaser. **LAMPS, FUSES, AND LITHIUM BATTERIES ARE NOT COVERED UNDER THIS WARRANTY.**

If "Warranty" is purchased as part of the Fuel Management Service, Veeder-Root will maintain the equipment for the life of the contract in accordance with the written warranty provided with the equipment. A Veeder-Root Fuel Management Services Contractor shall have free site access during Customer's regular working hours to work on the equipment. Veeder-Root has no obligation to monitor federal, state or local laws, or modify the equipment based on developments or changes in such laws.

MODULES, KITS, OTHER COMPONENTS (PARTS PURCHASED SEPARATE OF A COMPLETE CONSOLE)

We warrant that this product shall be free from defects in material and workmanship and is compliant with all applicable performance standards and specifications for which it has been certified, for a period of one (1) year from the date of installation when proof of the date of installation is provided or fifteen (15) months from the date of manufacture when proof of date of installation is not provided. We warrant that the lithium batteries (excluding EVR BATTERY PACK) shall be free from defects in material and workmanship for a period of three (3) months from date of invoice. We will repair or replace the product if the product is returned to us; transportation prepaid by user, within the warranty period, and is determined by us to be defective. **LAMPS AND FUSES ARE NOT COVERED UNDER THIS WARRANTY.**

IN STATION DIAGNOSTICS (ISD)

For components used in ISD systems (Vapor Flow Sensor, Vapor Pressure Sensor, Software, TLS RF, Wireless Repeater, Wireless Transmitter & Wireless Receiver), excluding **LAMPS, FUSES, AND LITHIUM BATTERIES**, the following warranty applies:

We warrant that this product shall be free from defects in material and workmanship and is compliant with all applicable performance standards and specifications for which it has been certified,, for a period of one (1) year from the date of ISD start-up when proof of the date of install is provided or twenty-four (24) months from the date of manufacture when proof of date of installation is not provided. During the warranty period, we and or our representative will repair or replace the product, if determined by us to be defective, at the location where the product is in use, at no charge to the purchaser.

For ISD components installed after the initial ISD start-up, we warrant that these products shall be free from defects in material and workmanship and is compliant with all applicable performance standards and specifications for which it has been certified, for a period of one (1) year from the date of installation when proof of the date of install is provided or fifteen (15) months from date of manufacture when proof of date of installation is not provided. We will repair or replace the product if the product is returned to us; transportation prepaid by user, within the warranty period, and is determined by us to be defective.

EVR BATTERY PACK

We warrant that this product shall be free from defects in material and workmanship and is compliant with all applicable performance standards and specifications for which it has been certified, for a period of one (1) year from the date of installation when proof of the date of install is provided or fifteen (15) months from the date of manufacture when proof of date of installation is not provided. **The replacement EVR Battery Pack warranty period will be the REMAINING warranty period of the original EVR Battery Pack. LAMPS, FUSES, AND LITHIUM BATTERIES OTHER THAN THE EVR BATTERY PACK, ARE NOT COVERED UNDER THIS WARRANTY.**

Introduction

Site Requirements 1
Supported Vapor Recovery Systems 2
Contractor Certification Requirements 2
Related Manuals 2
Safety Precautions 3
Example Site Diagrams 4

Installation

Vapor Flow Meter 6
Vapor Pressure Sensor 6
Installing TLS Console Modules - General Notes 6
Circuit Directory 7
Smart Sensor Interface Module 8
NVMEM Board 8
Site Shut Down Requirements 8
Dispenser Interface Module (DIM) 8
Probe Interface Module 8

Setup

Introduction 9
System Setups 9
Alarm Setups 9
Smart Sensor Setup 10
Hose label/Fueling Point/Air Flow Meter Serial Number Chart 11
EVR/ISD Setup 11
Alarm Setup 16
Introduction 16
Programming ISD Shut Down Alarms 18
Alarm Setup for Sites with Dispenser Relays 22

ISD Operability Test Procedure

Vapor Pressure Sensor Verification Test 24
Vapor Flow Meter Operability Test 24

Operation

Alarms 25
Overview of TLS console Interface 25
Warning Posting 25
Alarm Posting 26
Site Reenable 26
Alarm Logs 27
Alarm Sequence 27
ISD Alarm Summary 28
Reports 30
Viewing ISD Reports via RS-232 Connection 35
Connecting Laptop to Console 35
Connecting Laptop to Console 36
Sending Console Commands 39

Maintenance

TLS Console 43
Vapor Flow Meter 43
Vapor Pressure Sensor 43

Diagnostic Menus 44

Appendix A: Site EVR/ISD Equipment Location Worksheet

Figures

Figure 1. Example Site Diagram 5
Figure 2. TLS Console Interface Module Bays 7
Figure 3. Smart Sensor Setup 10
Figure 4. Smart Sensor Setup Printout Example 11
Figure 5. EVR/ISD Setup 1 12
Figure 6. EVR/ISD Setup 2 13
Figure 7. EVR/ISD Setup 3 14
Figure 8. Example Healy Setup Printout 15
Figure 9. Site Tank Control Examples 16
Figure 10. Dispenser Control Examples 17
Figure 11. Assigning ISD Shut Down Alarms in Line Leak Disable Setup 18
Figure 12. Example Line leak Disable Setup Printout 19
Figure 13. Assigning ISD Shut Down Alarms in Output Relay Setup 20
Figure 14. Example Printout - ISD Alarms Assignments - Output Relay Setup 21
Figure 15. Assigning ISD Shut Down Alarms in Dispenser Relay Setup 22
Figure 16. Example Printout - ISD Hose Alarm Assignments - Dispenser Relay Setup 23
Figure 17. TLS Console Alarm Interface 25
Figure 18. Example Warning Posting 26
Figure 19. Example Alarm Posting 26
Figure 20. ISD Alarm Override Procedure 27
Figure 21. Printing ISD Reports on Console Printer 31
Figure 22. ISD Status Report Example - TLS Console Printout 32
Figure 23. ISD Daily Report Example - TLS Console Printout 33
Figure 24. ISD Monthly Report Example - TLS Console Printout 34
Figure 25. Connecting Laptop to TLS Console for Serial Communication 35
Figure 26. Connection Description Window 36
Figure 27. Connect to Window 37
Figure 28. Console Comm Port Settings Printout Example 38
Figure 29. HyperTerminal Main Window 39
Figure 30. ISD Daily Report Details - Serial to PC Format 41
Figure 31. ISD Monthly Status Report - Serial to PC Format 42
Figure 32. ISD Alarm Status Report - Serial to PC Format 43

Tables

Table 1. V-R Supported Vapor Recovery Systems 2
Table 2. Related Manuals 2
Table 3. SD Alarm Summary 28
Table 4. Other Alarms 29
Table 5. Wireless Related Sensor Alarms 29
Table 6. Serial Commands for ISD Alarm, Monthly, and Daily Reports 40
Table 7. Clear Test Repair Menu 47

Introduction

In-Station Diagnostic (ISD) equipment is designed to monitor the collection and containment of vapors by vapor recovery equipment. Using the existing Veeder-Root (V-R) TLS console platform, sensor inputs an dispenser fuel meter inputs, the ISD software continuously monitors the vapor recovery equipment, maintains test records, provides test reports, generates alarms following test/equipment failures, and finally, shuts down the site upon the occurrence of designated alarms.

This manual provides instructions to install, setup, and operate the special components of the Veeder-Root ISD system that are not covered in existing documentation shipped with other non-ISD specific V-R equipment (e.g., Mag probes, line leak detection, etc.). The ISD feature is an option for the TLS console platform, and as such, many of the installation/setup/operation instructions for non-ISD specific tasks (e.g., line leak detection) are covered in TLS-3XX supplied literature.

WARNING! Revision or reprogramming of the TLS may require notification of the local Certified Unified Program Agency (CUPA).

Site Requirements

Below are the requirements for all vapor recovery systems except where noted.

- V-R TLS-350R/EMC w/BIR, TLS-350 Plus/EMC Enhanced, TLS-350/EMC and Red Jacket ProMax consoles with ECPUII - install as per TLS-3XX Site Prep manual, setup following instructions in TLS-3XX System Setup Manual.
- A flash memory board (NVMEM2) for ISD software storage - installed on the ECPUII board in place of the console's 1/2 Meg RAM board - install as per TLS-350 Series Board and Software Replacement Manual, no setup required.
- A RS-232 module is required for RS-232 access to ISD reports - install as per instructions shipped with module, setup following instructions in this manual.
- An output relay or dispenser relay board is required (either 4-Output Relay module, I/O Combination module) to shut down each Submersible Turbine Pump (STP) or dispenser upon activation of certain ISD alarms (these alarms can also be assigned in Line Leak Disable setup to shut down the STP or dispenser if Line Leak detection feature is installed) - install as per instructions shipped with module or line leak system, setup ISD shut down alarms either using output relays or line leak system following instructions in this manual.
- Dispenser Interface module (DIM) for the type of dispensers installed - install as per installation manual shipped with device, setup following instructions in DIM manual and TLS-3XX Setup Manual. Note: the DIM supplies flow meter event inputs needed for ISD analysis.
- One V-R Mag probe in each of the gasoline tanks being monitored - install as per installation manual shipped with device, setup following instructions in TLS-3XX Setup Manual.
- Smart Sensor module is required to monitor Vapor Flow Meters and Vapor Pressure Sensor (up to 8 devices per module, or 7 if customer is using Smart Sensor module / embedded pressure). Install and connect following instructions in the Vapor Flow Meter and Vapor Pressure Sensor installation Guides.
- Vapor Flow Meters (one for each dispenser) - install as per ISD Flow Meter installation manual shipped with meter, setup following instructions in this manual.
- Vapor Pressure Sensor (one per site) - install as per ISD Pressure Sensor installation manual shipped with sensor, setup following instructions in this manual.
- To achieve CP-201 false alarm performance standards for ISD reporting, the vapor recovery system leak rate should be at or below 2.88 CFH at 2 inches water column.

Supported Vapor Recovery Systems

Table 1 lists V-R supported vapor recovery systems.

Table 1. V-R Supported Vapor Recovery Systems

Name	CARB Executive Order
Healy Assist EVR	VR-202

Contractor Certification Requirements

Veeder-Root Contractor Certification Requirements	Installer Certification[6]	ATG Technician Certification[7]	VR Vapor Products Certification[8]
Install[1] ISD	X	X	X
Install PMC	X	X	X
Install CCVP	X	X	X
Install Wireless ISD/PMC	X	X	X
Installation Checkout[2]		X	X
ATG Startup[3] / Training[4] / Service[5]		X	X
ISD Startup / Training / Service			X
PMC Startup / Training / Service			X
CCVP Startup / Training / Service			X
Wireless ISD/PMC Startup / Training / Service			X
Install Pressure Sensor (ATG)	X	X	X
Maintain Pressure Sensor (ATG)		X	X
Calibrate Pressure Sensor (ATG)		X	X
Clear ATG Pressure Sensor Alarm (ATG)		X	X
Clear ISD/PMC Alarms (ISD/PMC)			X

[1]Perform wiring and conduit touting; equipment mounting
[2]Inspect wiring and conduit routing; equipment mounting
[3]Turn power on, program and test the systems
[4]Provide supervised field experience in service techniques and operations
[5]Troubleshoot and provide routing maintenance
[6]UST Monitoring Systems – Installer (Level 1)
[7]Certified UST Monitoring Technician
[8]VR Vapor Products

Warranty Registrations may only be submitted by selected Distributors. Certified installers are required to provide the GDF operator with the completed Equipment Warranty Notice, form 577013-868, for their records.

Related Manuals

The manuals in Table 2 below are shipped with the equipment on the V-R Tech Docs CD-ROM and will be needed to install non-ISD specific equipment.

Table 2. Related Manuals

V-R Manual	Part Number
TLS-3XX Site Prep Manual	VR202 IOM 21
ISD Flow Meter Installation Guide	VR202 IOM 22
ISD Vapor Pressure Sensor Installation Guide	577013-797
TLS-3XX Series Consoles System Setup Manual	576013-623

Table 2. Related Manuals

V-R Manual	Part Number
TLS-3XX Series Consoles Operator's Manual	576013-610
Serial Comm Modules Installation Guide	577013-528
ISD Troubleshooting Manual	577013-819
TLS-350 Series Board and Software Replacement Manual	576013-637
TLS-350R Point-of-Sale (POS) Application Guide	577013-401
Input/Output Modules Installation	576013-614
TLS RF Wireless 2 System (W2) Installation and Maintenance Guide	577013-964

Safety Precautions

The following symbols may be used throughout this manual to alert you to important safety hazards.

	ELECTRICITY High voltage exists in, and is supplied to, the device. A potential shock hazard exists.		TURN POWER OFF Live power to a device creates a potential shock hazard. Turn Off power to the device and associated accessories when servicing the unit.
	READ ALL RELATED MANUALS Knowledge of all related procedures before you begin work is important. Read and understand all manuals thoroughly. If you do not understand a procedure, ask someone who does.		**WARNING** Heed the adjacent instructions to avoid damage to equipment, property, environment or personal injury.

⚠ WARNING

The console contains high voltages which can be lethal. It is also connected to low power devices that must be kept intrinsically safe.

Turn power Off at the circuit breaker. Do not connect the console AC power supply until all devices are installed.

FAILURE TO COMPLY WITH THE FOLLOWING WARNINGS AND SAFETY PRECAUTIONS COULD CAUSE DAMAGE TO PROPERTY, ENVIRONMENT, RESULTING IN SERIOUS INJURY OR DEATH.

Example Site Diagrams

Figure 1 shows an example site diagram. The diagram show setups unique to ISD which are discussed in this manual (marked with a star), and those setups performed following instructions in the appropriate sections of the TLS-3XX System Setup manual, such as In-Tank setup (marked with a hexagon).

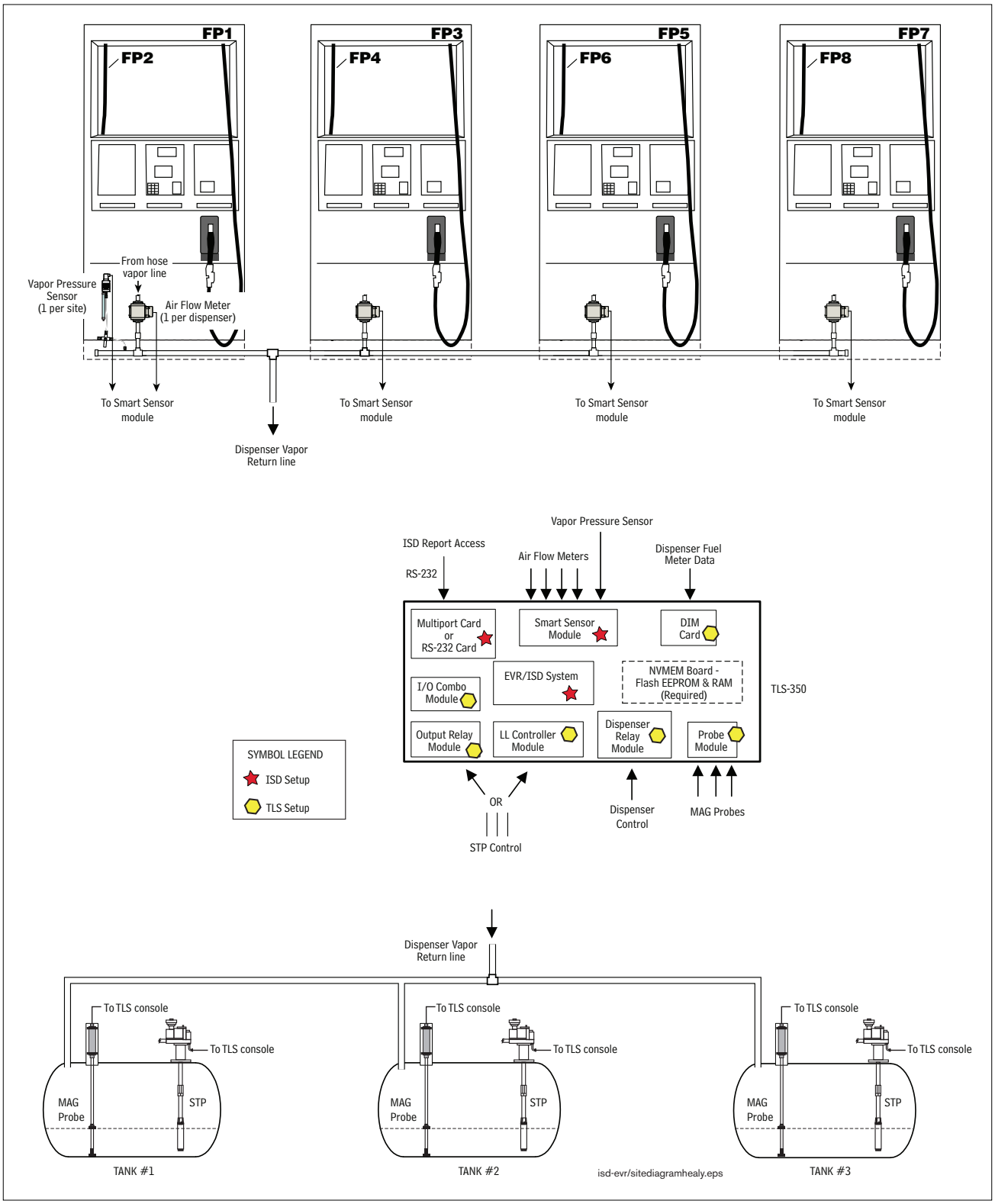

Figure 1. Example Site Diagram

Installation

This section discusses the installation and wiring of the hardware required to enable the TLS console to perform ISD monitoring of the site's gasoline vapor recovery equipment (non-gas tanks are not monitored):

- Vapor Flow Meter
- Vapor Pressure Sensor
- Smart Sensor Interface Module (8 input and 7 input w/embedded pressure versions)
- NVMEM board - required
- 4-Relay Output Module or Dispenser Relay Module
- Line Leak Detection
- Dispenser Interface Module
- Probe Interface Module

All field wiring, its type, its length, etc., used for TLS console sensors must conform to the requirements outlined in the Veeder-Root TLS-3XX Site Prep manual (P/N 576013-879).

Vapor Flow Meter

Install one Vapor Flow Meter in the vapor return piping of each gasoline dispenser following the instructions in the ISD Flow Meter Installation guide (P/N 577013-796). Program the meter following instructions in this manual.

Vapor Pressure Sensor

Install one Vapor Pressure Sensor in the vapor return piping of the gasoline dispenser closest to the tanks following the instructions in the ISD Pressure Sensor Installation guide (P/N 577013-797). Program the meter following instructions in this manual.

Installing TLS Console Modules - General Notes

TLS consoles have three bays in which interface modules can be installed; Comm bay (left door) and Power and Intrinsically-Safe bays (right door). Smart Sensor modules are installed in the Intrinsically-Safe (I.S.) bay only (Figure 2).

Most consoles will be shipped with modules installed as ordered. If additional features are added at a later date, modules will be field installed.

In all cases, the position of the modules, their respective connectors and the devices wired to the connectors must be recorded to prevent improper replacement during installation or service. A circuit directory for Power and I.S. bay Interface Modules is adhered to the back of the right-hand door for this purpose.

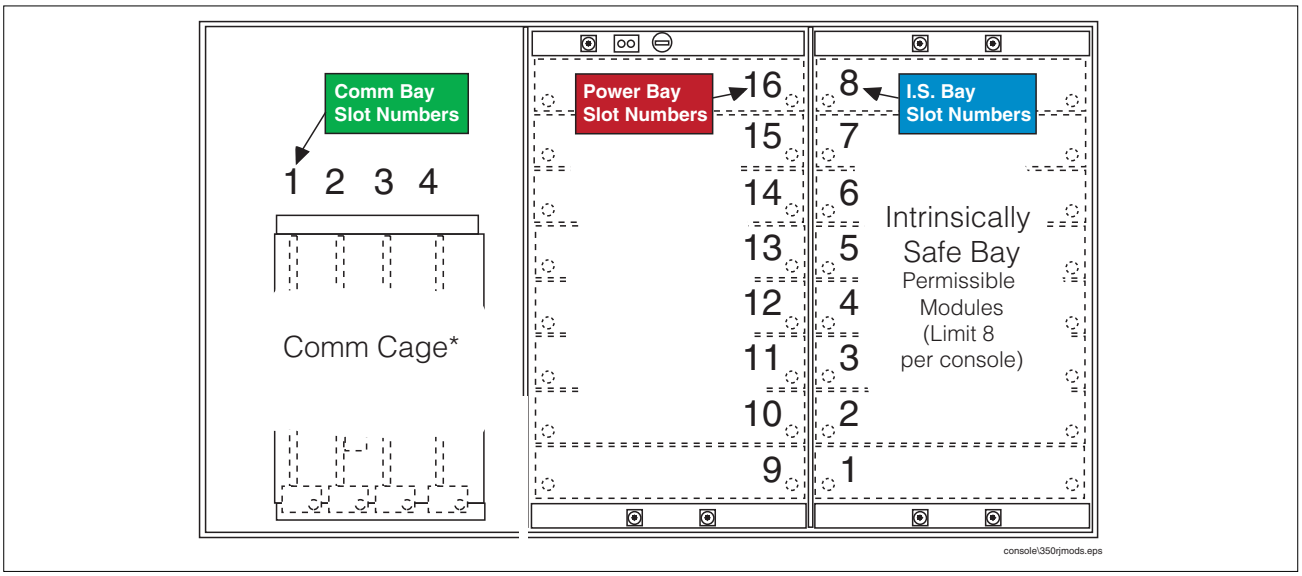

Figure 2. TLS console Interface Module Bays

CAUTION! During programming, module positions and the devices wired to each module are identified and stored in memory. If a connector is removed and reinstalled on a different module after programming, or if an entire module with its connector is removed and reinstalled in a different module slot, the system will not properly recognize the data being received.

Module Position

1. Record on the circuit directory the type of module in each slot location.
2. If a system contains multiple modules of a single type (i.e., two Smart Sensor Modules), they may be swapped between their respective slot locations, however, the connectors must remain with their original locations, not with the original modules.

Connector Position

1. Identify all connectors according to their slot location using the self-adhesive numbering labels furnished with each module. Accurately record on the circuit directory the location of each device wired to the connector as you attach wires to the module.
2. Once a device has been wired to certain terminals on a connector and the system has been programmed, the wires from that device may not be relocated to other terminals without reprogramming the system.

Grounding Probe and Sensor Shields

Connect probe and sensor cable shields to ground at the console only. Do not ground both ends of the shield.

CIRCUIT DIRECTORY

A circuit directory is adhered to the inside of the right-hand door. It should be filled out by the installer as the module's connectors are being wired.

The following information should be recorded for each slot:

- Module Type: record what type of module has been installed in the slot, e.g., Smart Sensor Module.
- Position Record: record the physical location and/or type of device wired to each terminal of the module connector in the slot, e.g., VFM1.

Smart Sensor Interface Module

The Smart Sensor Interface Module 8 input or 7 input w/embedded pressure versions monitor Vapor Flow Meter (VFM) and Vapor Pressure Sensor (VPS) inputs.

Switch off power to the TLS console while you install modules and connect sensor wiring.

Open the right door of the console and slide the necessary Smart Sensor modules into empty I.S. Bay slots. Connect the field wiring from each of the sensors following instructions in the Vapor Flow Meter and Vapor Pressure Sensor manuals. Setup the Smart Sensor module(s) following instructions in this manual.

NVMEM Board

Verify that a NVMEM board is installed in the TLS console (ref. Figure 2-14 in the V-R TLS-3XX Series Consoles Troubleshooting Manual P/N 576013-818, Rev J or later). This board contains flash EEPROM and RAM needed to run ISD software and store ISD reports. No setup is required.

Site Shut Down Requirements

Normal ISD operation requires TLS console control of the STP in each of the gasoline tanks. If the site has Wireless Pressure Line Leak Detection (WPLLD), Pressure Line Leak Detection (PLLD) or Volumetric Line Leak Detection (VLLD) for each tank, you can use the line leak disable setup to control the vapor recovery tanks (diesel tanks do not require shutdown). If the site does not have line leak detection for all vapor recovery tanks, you can use output relay setup to control each tank. In lieu of line leak detection, install the necessary modules (output relay) to control each gasoline tank. . Alternately, you can install Dispenser Relay Modules to control dispensing.

Dispenser Interface Module (DIM)

Verify that a dispenser interface module (DIM) is installed in the TLS console communication bay (ref. Figure 2) and that it is designed to communicate with the type of gasoline dispensers installed at the site. The ISD software requires dispenser fuel flow meter data inputs. Reference TLS-350R Point-of-Sale (POS) Application Guide to select correct DIM card. Refer to the manual shipped with the DIM for installation instructions, refer to the TLS-3XX System Setup manual to program the DIM.

Probe Interface Module

Verify that a Probe Interface Module(s) is installed (Intrinsically-Safe bay) and that a Mag probe is in each gasoline tank and is connected to the module(s). Program the Mag probes following instructions in the TLS-3XX System Setup manual.

Setup

Introduction

This section describes how to program the ISD system using the TLS console's front panel buttons and display. The procedures in this manual follow standard TLS console setup programming input, i.e., keypad/display interaction. If necessary, refer to Section 2 of the TLS-3XX System Setup manual (P/N 576013-623) to review entering data via the front panel keypads.

All ISD-related equipment must be installed in the site and connected to the TLS console prior to beginning the setups covered in this section. As with all TLS connections, you cannot change sensor wiring or module slots after programming or the system will not recognize the correct data. Reference the section entitled "Connecting Probe/ Sensor Wiring to Consoles" in the TLS-3XX Site Prep and Installation manual (P/N 576013-879) for rewiring precautions.

SYSTEM SETUPS

- Smart Sensor Setup - All ISD sites - Figure 3

  This setup mode function programs the Smart Sensor Interface module to monitor the Air Flow Meters and the Vapor Pressure Sensor.

- EVR/ISD Setup - All ISD sites - Figure 5, Figure 6, Figure 7

  This setup mode function programs the TLS console for EVR/ISD vapor recovery monitoring and reporting.

- Verify Console Date/Time - Check the console front panel to confirm display of current date and time. Reset if necessary (refer to current date/current time setups in TLS-3XX System Setup manual).

ALARM SETUPS

One or ormore TLS setup functions must be programmed to shut down the tankor the dispenser if certain ISD alarms occur:

- XLLD Line Disable Setup - For ISD sites with line leak detection - Figure 11

  This setup mode function lets you assign ISD alarms to a line leak detector that will shut down the tank's STP.

- Output Relay Setup - For ISD sites without line leak detection - Figure 13

  This setup mode function lets you assign ISD alarms to a relay on the 4-Relay output module or I/O Combination module that will shut down the tank's STP.

- For ISD sites with dispenser shutdown - Dispenser Relay Setup (go to Figure 15)

  This setup assigns ISD alarms to a relay that will shut down the dispenser.

Smart Sensor Setup

The Smart Sensor Interface Module is installed in the Intrinsically-Safe bay of the TLS console. This module monitors Air Flow Meters and the Vapor Pressure Sensor. Figure 3 diagrams the Smart Sensor setup procedure. Figure 4 shows a printout of the Smart Sensor setup.

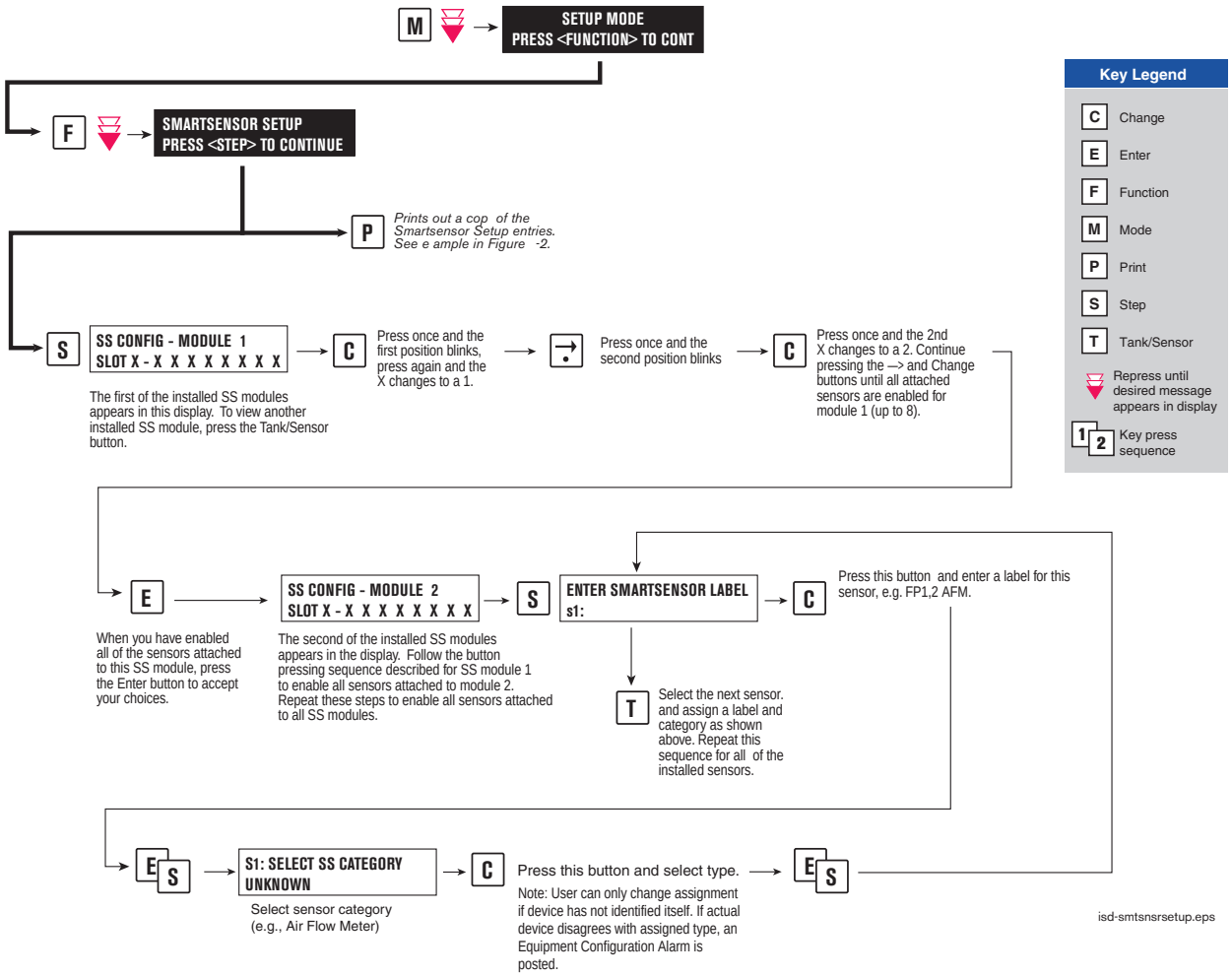

Figure 3. Smart Sensor Setup

```
SMARTSENSOR SETUP
---------------------

S01:FP 1  - 2
CATEGORY AIR FLOW METER

S02:VAPOR PRESSURE
CATEGORY VAPOR PRESSURE
```

isd-evr\sssetprt.eps

Figure 4. Smart Sensor Setup Printout Example

Hose label/Fueling Point/Air Flow Meter Serial Number Chart

The next step in programming your system requires documentation of information from the ISD equipment installed at the facility. Choose the appropriate data sheet from Appendix A for the vapor recovery system installed at your facility. Record the unique information from the sensors prior to attampting the TLS EVR/ISD set up described in Figure 6. After you complete the TLS EVR/ISD you must perform the Product Meter ID set up procedure to complete the set up

EVR/ISD Setup

Figure 5, Figure 6, and Figure 7 diagram the EVR/ISD setup programming. Start with the first figure, continue to the second, and finish in the third. Figure 8 shows an example printout of the EVR/ISD setup.

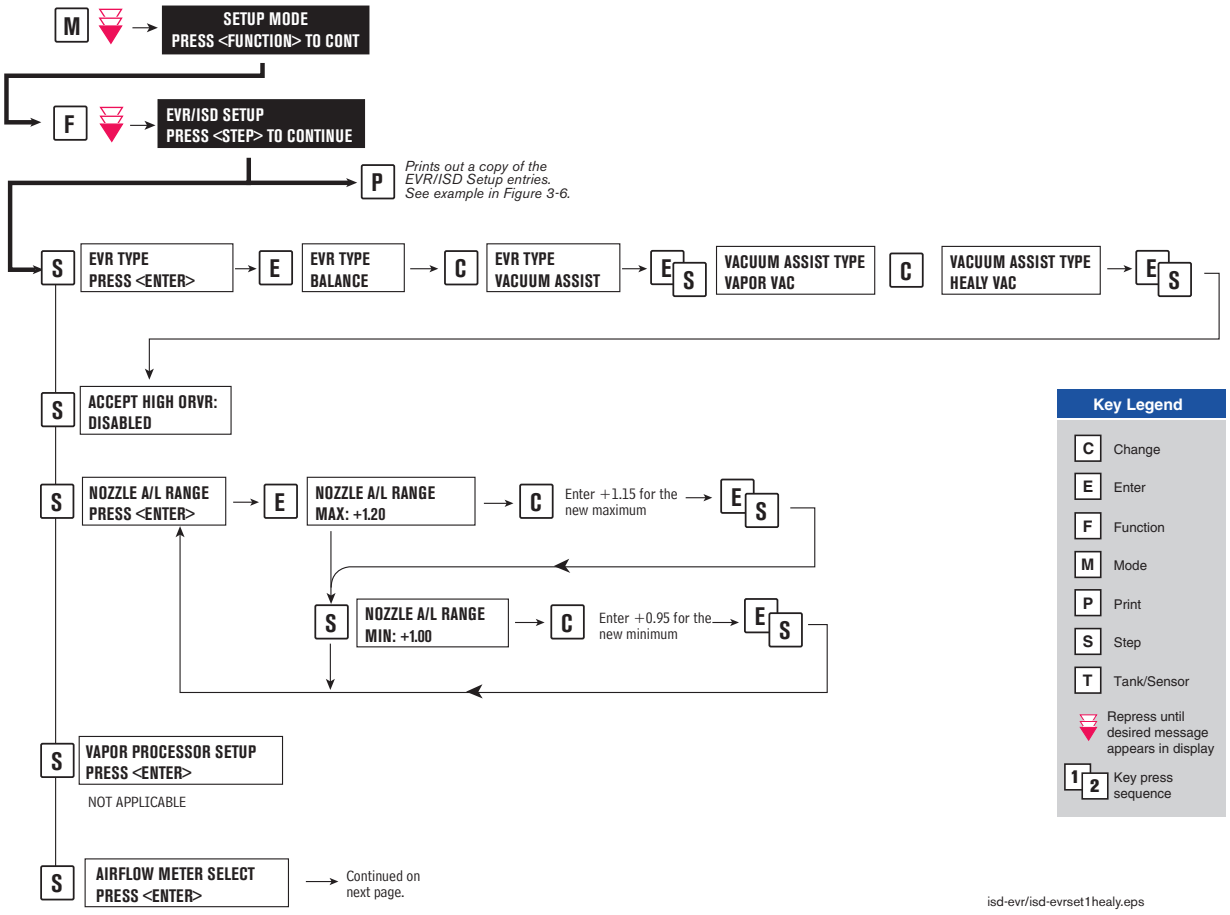

Figure 5. EVR/ISD Setup 1

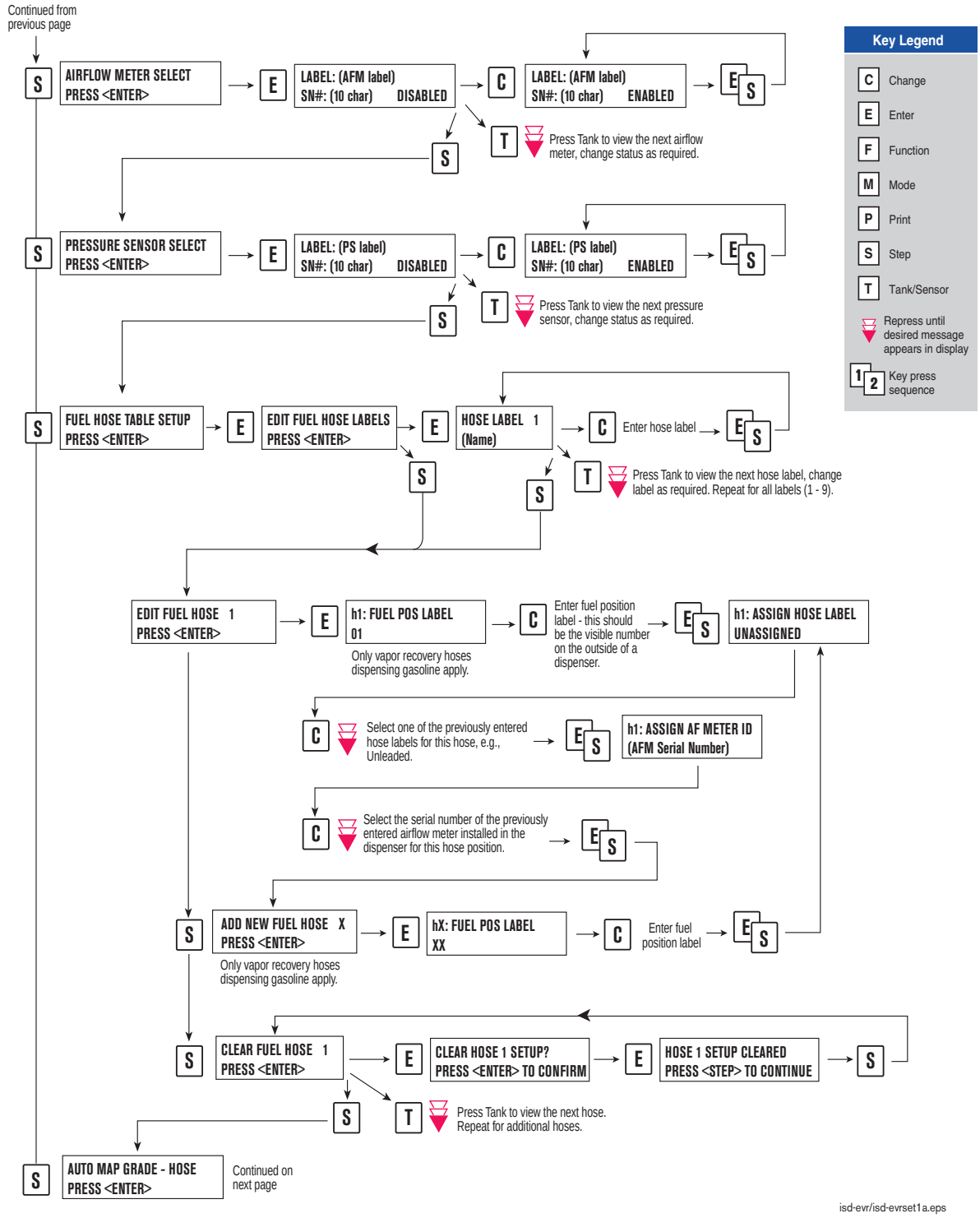

Figure 6. EVR/ISD Setup 2

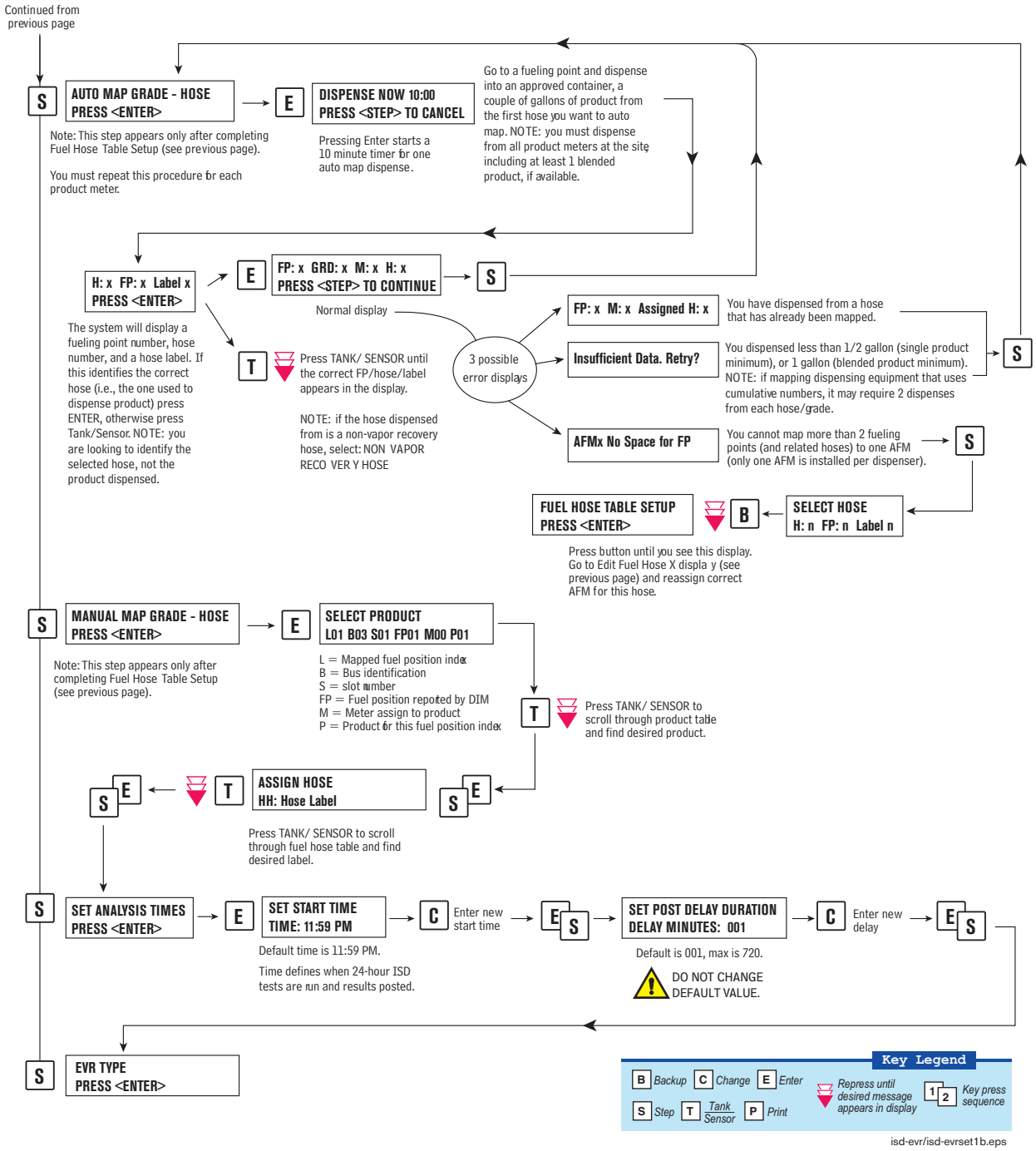

Figure 7. EVR/ISD Setup 3

```
EVR/ISD SETUP

EVR TYPE: VACUUM ASSIST
VACUUM ASSIST TYPE
HEALY VAC

NOZZLE A/L RANGE
MAX: 1.15 MIN: 0.95

VAPOR PROCESSOR TYPE
NO VAPOR PROCESSOR

ANALYSIS TIMES
TIME: 11:59 PM
DELAY MINUTES: 1

ACCEPT HIGH ORVR:
DISABLED

ISD HOSE TABLE
ID  FP  FL  HL  AA  RR
------------------------
01  01  01  02  01  01
02  02  02  02  01  01
03  03  03  02  02  02
04  04  04  02  02  02
05  05  05  02  03  UU
06  06  06  02  03  UU
07  07  07  02  04  UU
08  08  08  02  04  UU
09  09  09  02  05  UU
10  10  10  02  05  UU
11  11  11  02  06  UU
12  12  12  02  06  UU

ISD AIRFLOW METER MAP
ID SERIAL NUM LABEL
------------------------
 1 03001401   AFM1 FP1 -
 2 03001402   AFM2 FP3 -
 3 03001403   AFM3 FP5 -
 4 03001404   AFM4 FP7 -
 5 03001405   AFM5 FP9 -
 6 03001406   AFM6 FP11

ISD FUEL GRADE HOSE MAP
    1   2   3   4
FP MHH MHH MHH MHH AA
------------------------
01 101 301 901 U U  1
02 102 302 902 U U  1
03 103 303 903 U U  2
04 104 304 904 U U  2
05 105 305 905 U U  3
06 106 306 906 U U  3
07 107 307 907 U U  4
08 108 308 908 U U  4
09 109 309 909 U U  5
10 110 310 910 U U  5
11 111 311 911 U U  6
12 112 312 912 U U  6

LABEL TABLE
------------------------
 1: UNASSIGNED
 2: BLEND3
 3: REGULAR
 4: MID GRADE
 5: PREMIUM
 6: GOLD
 7: BRONZE
 8: SILVER
 9: BLEND2
10: BLEND4
```

ID = Hose ID
FP = Mapped fuel position as TLS Console recognizes it
(-1 = unassigned)
FL = Fuel position label as written on dispenser
HL = Hose label
AA = Airflow meter ID assigned
RR = Relay ID
UU = unassigned

ID = Airflow meter ID assigned
Serial Number = Airflow meter's serial number

FP = Mapped fuel position
M/H = Meter and hose for product X
AA = Airflow meter assigned to first (lowest X) product with meter and hose assigned (usually same for entire dispenser)
U = Unassigned
N = Not used by ISD

ID = Label ID
Label = User definable
00 = reserved, non-ISD

isdhealysetprtout.eps

Figure 8. Example Healy Setup Printout

Alarm Setup

INTRODUCTION

California regulations (VAPOR RECOVERY CERTIFICATION PROCEDURE, CP-201, CERTIFICATION PROCEDURE FOR VAPOR RECOVERY SYSTEMS AT GASOLINE DISPENSING FACILITIES, Section 10.1.2) require shut down of dispensing systems that generate specific alarm conditions. To accomplish this, the TLS must be configured to control the gasoline tank's pump (diesel tanks are not monitored)or the gasoline dispensers in order to disable them when ISD shutdown alarm conditions occur. Prior to setting up ISD shut down alarms, you will need to determine how the site's tank pumpsor dispensers are controlled. If the site has line leak detection, you can shut down the line (tank) by assigning the ISD alarms in Line Leak Disable setup. In the absence of line leak detection, you can assign the ISD alarms to Output Relays which in turn can be wired to shut down the tank or assign ISD alarms to Dispenser Relays which can be used to shut down the dispenser. Figure 9 illustrates two examples of tank pump control, one using a line leak/output relay combination and one using output relays.

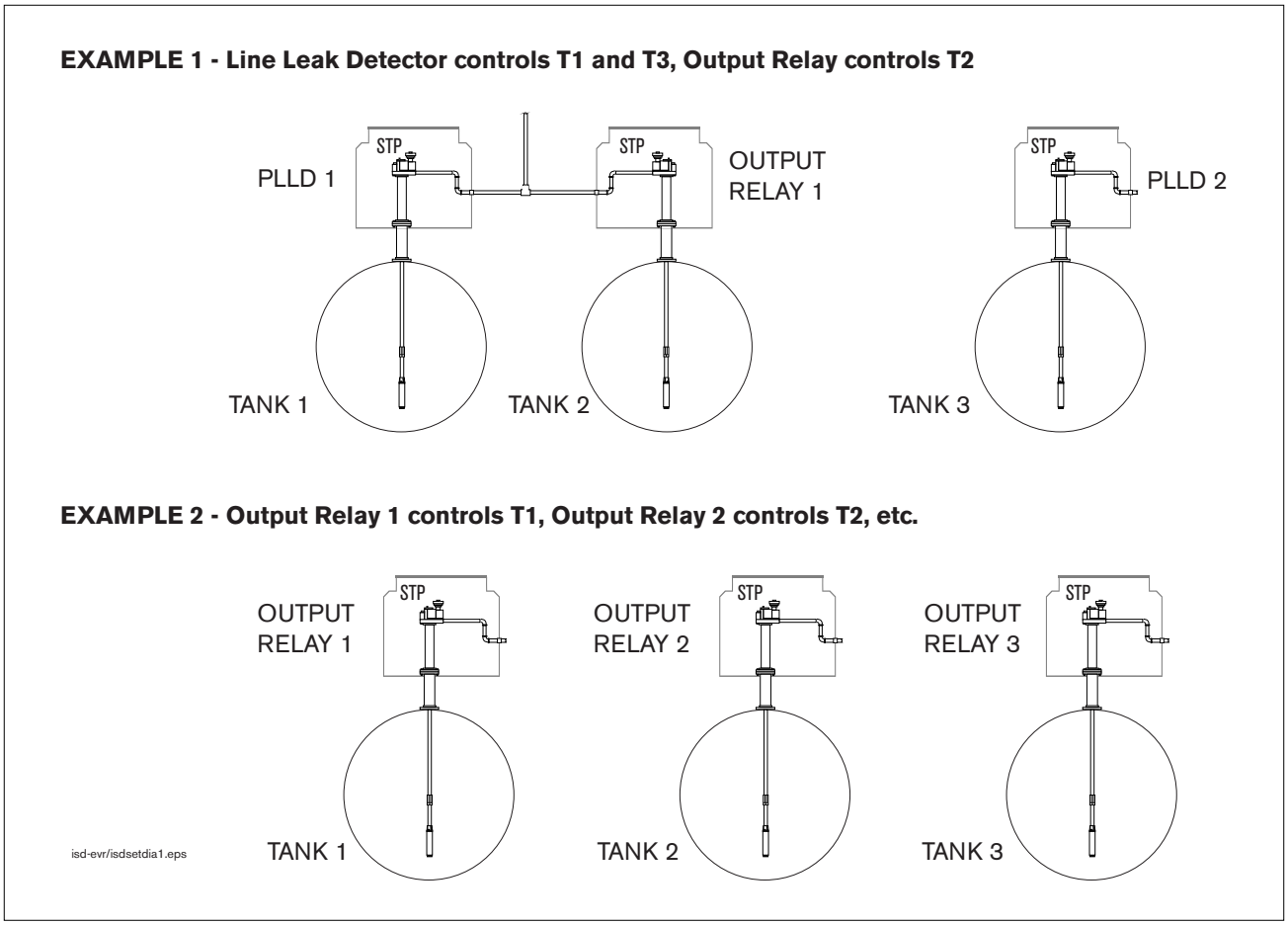

Figure 9. Site Tank Control Examples

Referencing the figure above, in example 1, you would assign the ISD shut down alarms for tank 1 to PLLD 1 in PLLD Line Leak Disable setup, for tank 2 to a relay in Output Relay Setup, and for tank 3 to PLLD 2 in PLLD Line Leak Disable setup. In example 2, you would assign the ISD shut down alarms for tank 1 to output relay 1, tank 2 to output relay 2, and tank 3 to output relay 3.

Figure 10 illustrates two examples of dispenser control using Dispenser Relay modules.

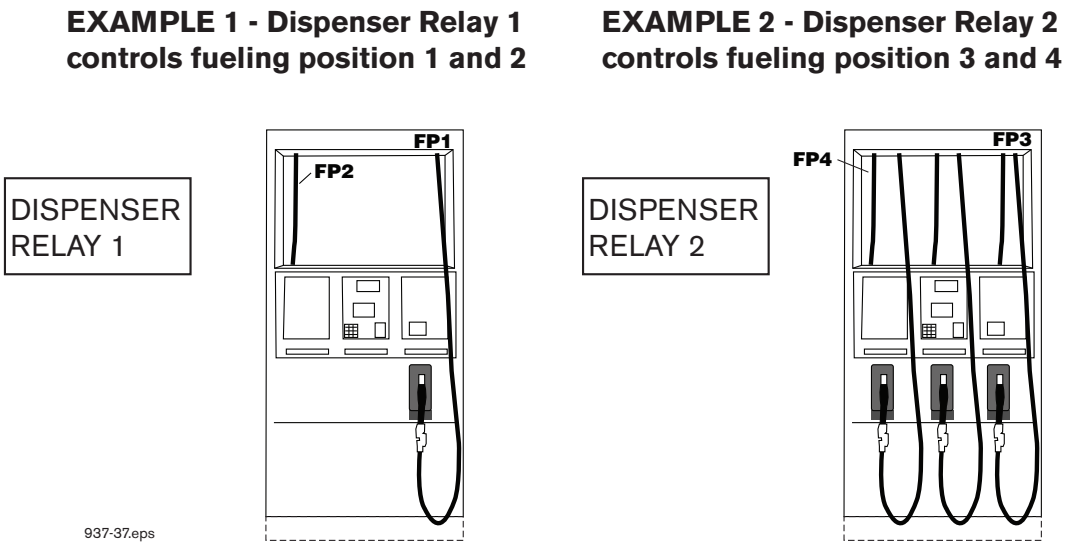

Figure 10. Dispenser Control Examples

You can assign ISD containment shut down alarms to the submersible pump output relays and assign ISD collection alarms to the dispenser relay as shown above.

PROGRAMMING ISD SHUT DOWN ALARMS

Figure 11 illustrates the setup steps required to assign ISD Shut Down Alarms to a tank having a line leak detection system installed.

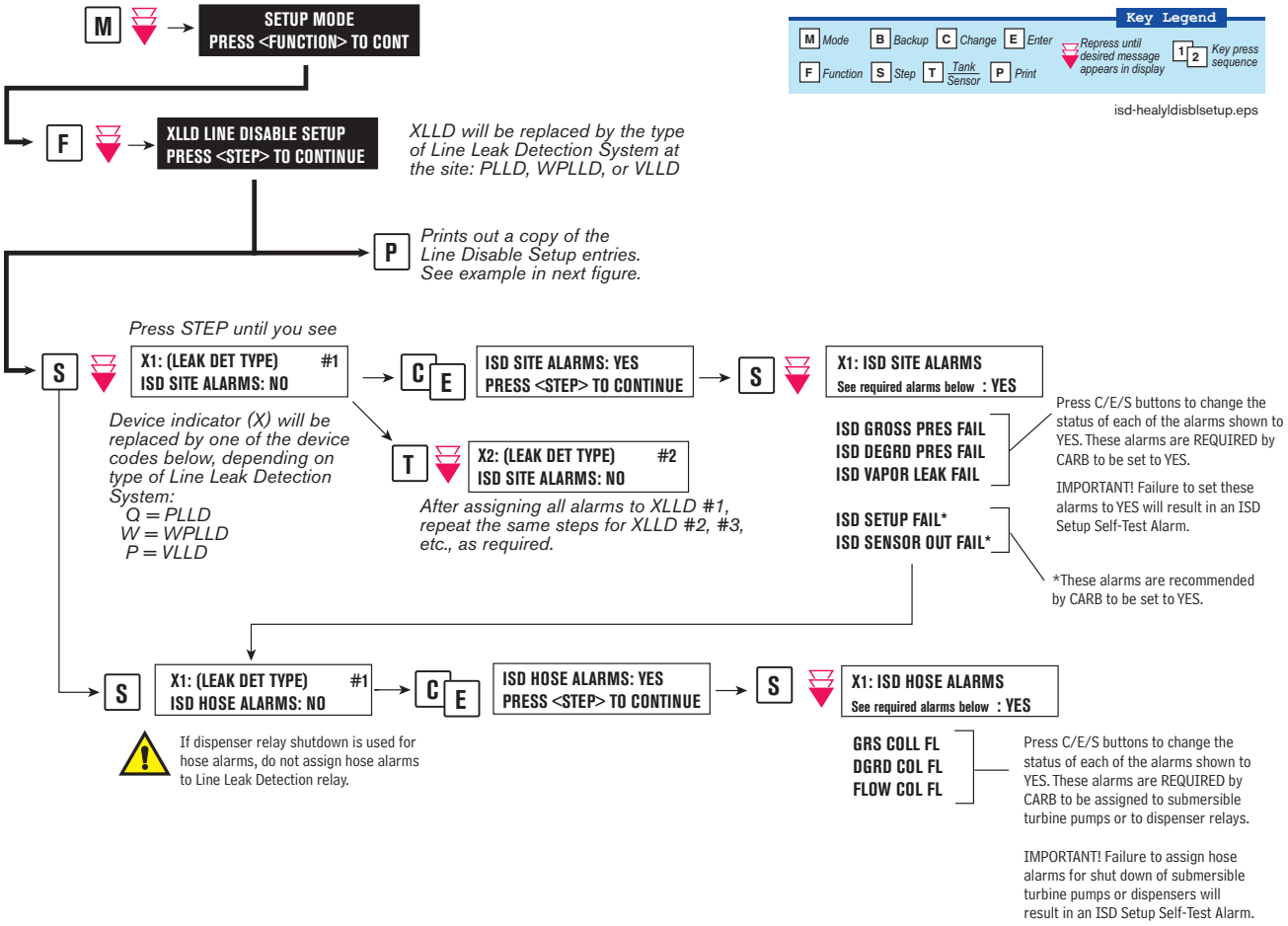

Figure 11. Assigning ISD Shut Down Alarms in Line Leak Disable Setup

Figure 12 shows a resulting printout of the Line Leak Disable setup with ISD alarms assigned when Dispenser Relay modules are not used.

```
PLLD LINE DISABLE SETUP
-----------------------

Q 1:UNLEADED

ISD SITE ALARMS
 ISD GROSS PRESSURE FAIL
 ISD DEGRD PRESSURE FAIL
 ISD VAPOR LEAKAGE FAIL
 ISD SETUP FAIL
 ISD SENSOR OUT FAIL

ISD HOSE ALARMS
 h1: GROSS COLLECT FAIL
 h1: DEGRD COLLECT FAIL
 h1: FLOW COLLECT FAIL
```

isd-evr\healylldsetprt.eps

Figure 12. Example Line leak Disable Setup Printout

Figure 13 illustrates the setup steps required to assign ISD Shut Down Alarms to a tank using either a Four Relay Output Module or an I/O Combination Module.

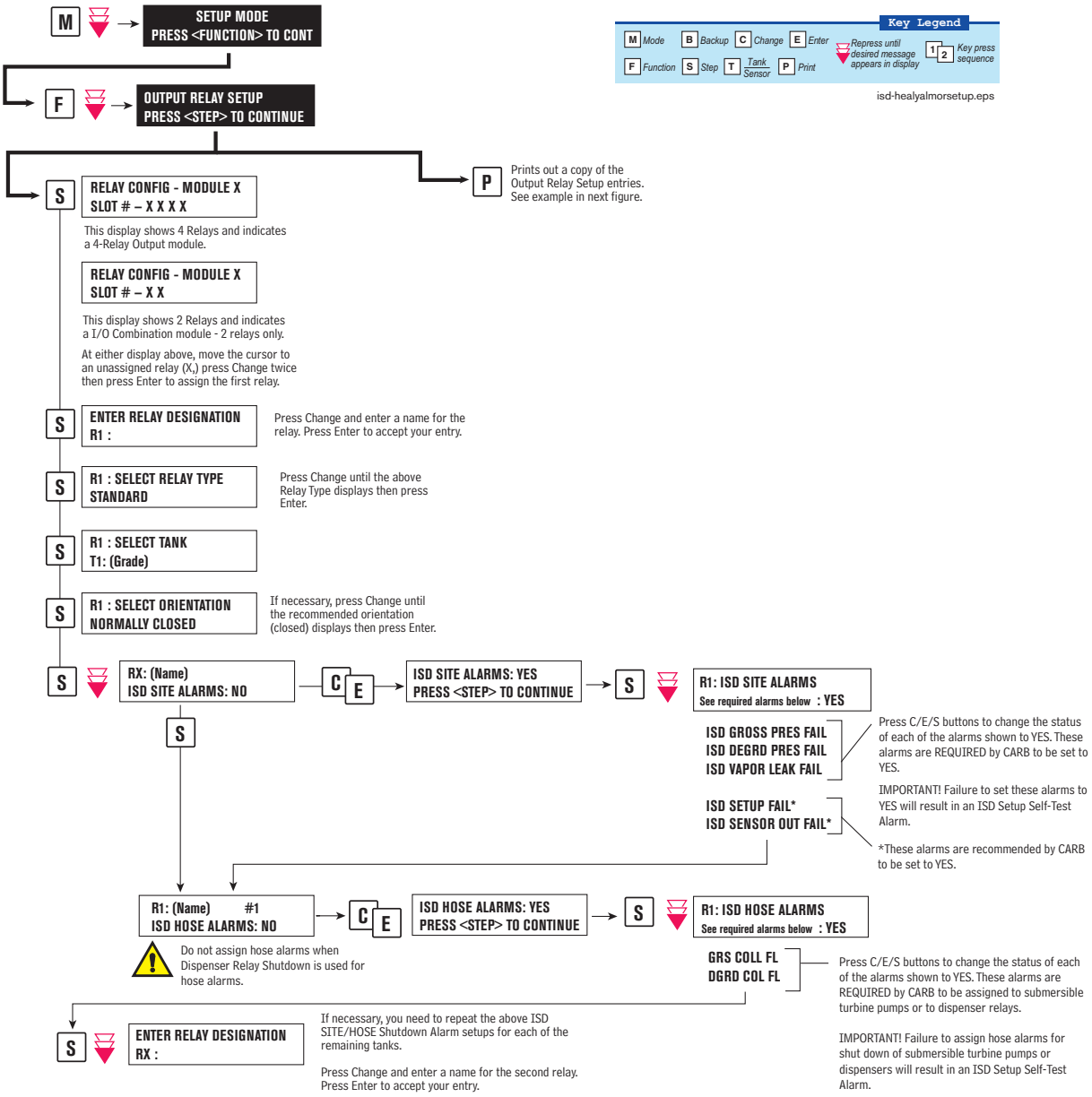

Figure 13. Assigning ISD Shut Down Alarms in Output Relay Setup

Figure 14 shows a resulting printout of the Output Relay setup with ISD alarms assigned when Dispenser Relay modules are not used.

```
OUTPUT RELAY SETUP
----------------------

R 1:(Input Name)
TYPE:
  STANDARD
NORMALLY CLOSED

ISD SITE ALARMS
 ISD GROSS PRESSURE FAIL
 ISD DEGRD PRESSURE FAIL
 ISD VAPOR LEAKAGE FAIL
 ISD SETUP FAIL
 ISD SENSOR OUT FAIL

ISD HOSE ALARMS
 h1: GROSS COLLECT FAIL
 h1: DEGRD COLLECT FAIL
```

isd-evr\healyorsetprt.eps

Figure 14. Example Printout - ISD Alarms Assignments - Output Relay Setup

ALARM SETUP FOR SITES WITH DISPENSER RELAYS

Figure 15 illustrates the setup steps required to assign ISD Shut Down Alarms to a tank using Dispenser Relay Module.

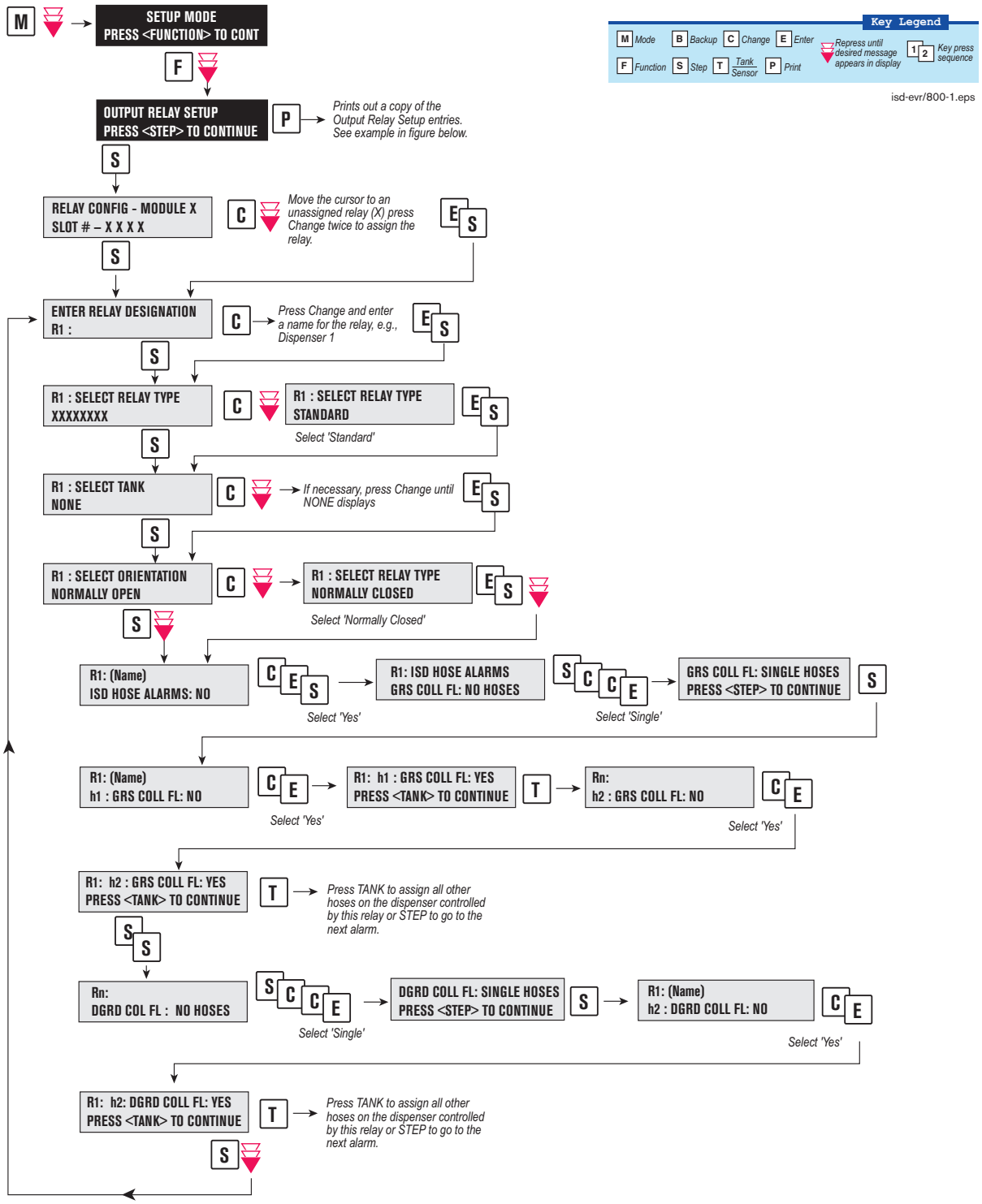

Figure 15. Assigning ISD Shut Down Alarms in Dispenser Relay Setup

Figure 16 shows a resulting printout of the Dispenser Relay setup with ISD hose alarms assigned..

```
OUTPUT RELAY SETUP
- - - - - -  - - - - - -

R 1:DISPENSER 1
TYPE:
  STANDARD
NORMALLY CLOSED

TANK #:   NONE


ISD HOSE ALARMS
 h 1:GROSS COLLECT FAIL
 h 2:GROSS COLLECT FAIL
 h 1:DEGRD COLLECT FAIL
 h 2:DEGRD COLLECT FAIL
```

isd-evr\800-2.eps

Figure 16. **Example Printout - ISD Hose Alarm Assignments - Dispenser Relay Setup**

ISD Operability Test Procedure

The following procedures shall be used at field sites to determine the operability of the Veeder-Root ISD system to satisfy the requirements documented in VAPOR RECOVERY CERTIFICATION PROCEDURE, CP-201, CERTIFICATION PROCEDURE FOR VAPOR RECOVERY SYSTEMS AT GASOLINE DISPENSING FACILITIES. Testing the ISD equipment in accordance with this procedure will verify the equipment's operability for Vapor Containment Monitoring and Vapor Collection Monitoring.

Veeder-Root's TLS console ISD System Self-Test Monitoring algorithms are designed to verify proper selection, setup and operation of the TLS console modules and sensors and will not complete and report passing test results in the event of a failure of components used in the system. Completed ISD monitoring tests are evidence that:

- The system was properly powered for data collection
- All necessary ISD sensors were setup and connected
- All necessary ISD sensors were operating within specification
- All internal components including TLS console modules were properly setup and operating within specification

Veeder-Root recommends printing a copy of the ISD ALARM STATUS and ISD DAILY report (REF. Section 5, Operation of the ISD Install, Setup & Operation Manual) periodically to determine that compliance tests are being completed in accordance with local and state regulations.

A step-by-step worksheet for recording data from the following operability tests is provided in Appendix B.

Vapor Pressure Sensor Verification Test

See EO VR 202 Exhibit 9 for the Pressure Sensor Verification Test.

Vapor Flow Meter Operability Test

See EO VR 202 Exhibit 9 for the ISD Vapor Flow Meter Operability Test Procedure.

Alarms

OVERVIEW OF TLS CONSOLE INTERFACE

The TLS console is continuously monitoring the vapor recovery system and ISD sensors for alarm conditions such as excessively high or low vapor collection, containment system vapor leakage and equipment problems.

During normal operation when the TLS console and monitored EVR/ISD System is functioning properly and no alarm conditions exist, the "ALL FUNCTIONS NORMAL" message will appear in the system status (bottom) line of the console display, and the green Power light will be On (see Figure 17).

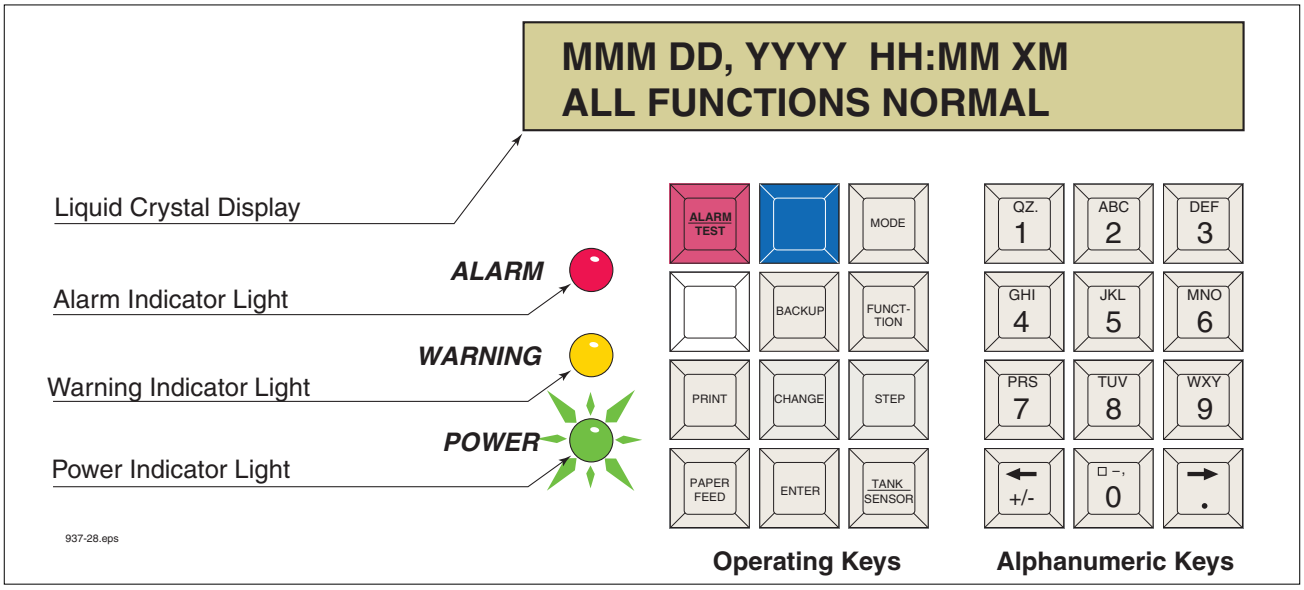

Figure 17. TLS Console Alarm Interface

If an alarm condition occurs the system displays the condition type and its location. If more than one condition exists, the display will continuously cycle through the appropriate alarm messages. The system automatically prints an alarm report showing the alarm type, its location and the date and time the alarm condition occurred.

Warning and alarm posting causes the TLS console-based system to activate warning or failure indicator lights, an audible alarm, and an automatic strip paper printout documenting the warning or alarm. Historical reports of warning and alarm events are available for up to one year.

WARNING POSTING

Displayed messages alert you to the source and type of alarm. Printed messages show the type and location of the alarm. In the Warning example in Figure 18, the display's second line and printed message indicates that the containment system's vapor leak rate has increased above the allowed standard generating a warning.

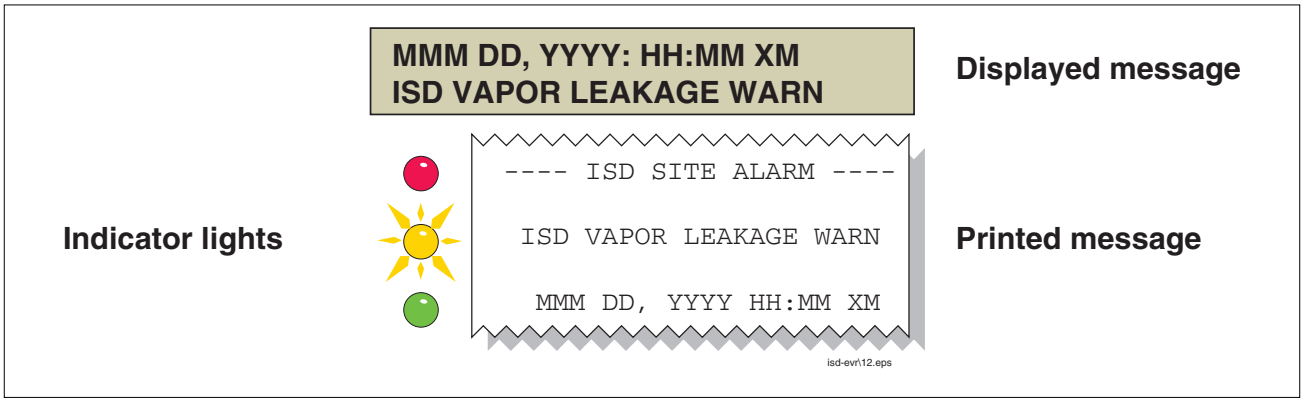

Figure 18. Example Warning Posting

The TLS console also logs an entry to the Warning Log upon posting a warning.

ALARM POSTING

Displayed messages alert you to the source/number and type of alarm. Printed messages show the type and location of the alarm. In the alarm example in Figure 19 the display's second line and printed message indicates that vapor collection on hose 1, FP1 Super has dropped below the allowed standard resulting in a failure alarm. (By default, for unihose dispensers, FP1 BLEND3 will be displayed rather than FP1SUPER as shown below.)

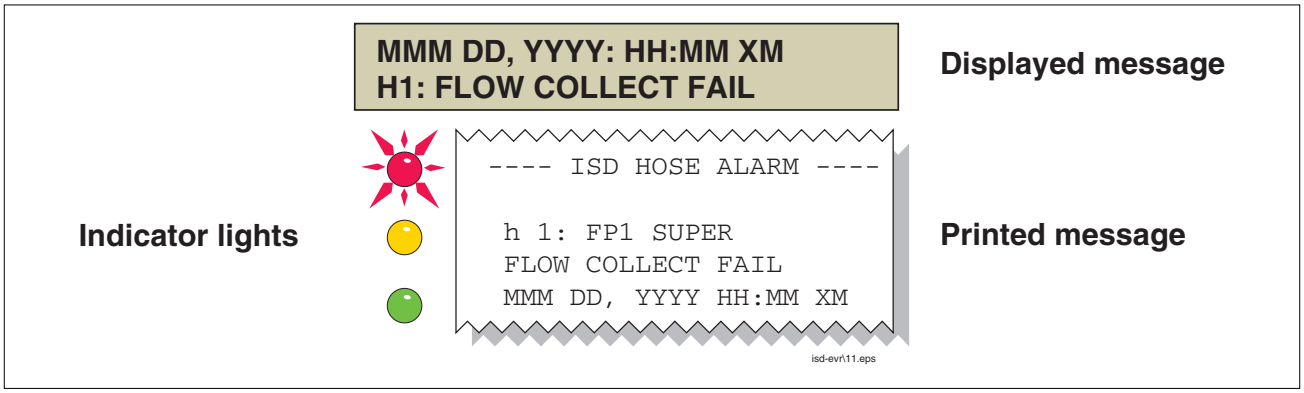

Figure 19. Example Alarm Posting

Upon posting a failure alarm, the TLS console logs an entry to the Failure Log, prohibits fuel dispensing from all ISD gasoline fueling point(s) and logs a shutdown event to the Shutdown & Misc. Event Log.

The initial release of ISD will prohibit fuel dispensing from all gasoline fueling points by shutting down the submersible pumps in all gasoline tanks. The method of overriding an ISD Alarm shutdown is discussed in the “Site Reenable” section.

SITE REENABLE

The TLS console ALARM/TEST button allows you to perform a logged shutdown override and resume dispensing. Figure 20 illustrates the ISD alarm override procedure.

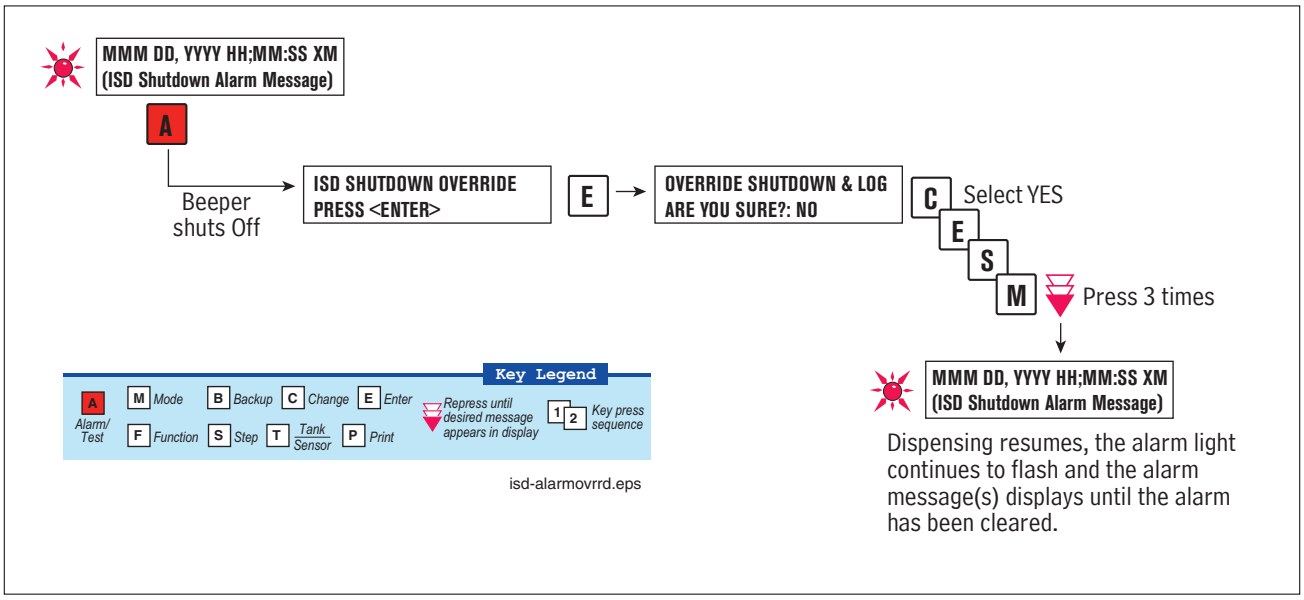

Figure 20. ISD Alarm Override Procedure

ALARM LOGS

Alarms will be recorded in the Warning Log or Failure Log of the monthly reports, which can be viewed electronically or via the integral printer (if queued in the most recent 10 events). The following example shows an excerpt from an electronically accessed monthly report.

Monthly Report Warning & Failure Log Examples:

Warning Alarms

Date	Time	Description	Reading	Value
2003/01/01	23:59	VAPOR VAPOR CONTAINMENT LEAKAGE	CFH@2"WC	14
2003/01/01	23:59	A/L RATIO DEGRADATION	FP2 MID	0.69
2002/12/31	23:59	VAPOR VAPOR CONTAINMENT LEAKAGE	CFH@2"WC	13
2002/12/31	23:59	A/L RATIO DEGRADATION	FP2 MID	0.67

Failure Alarms

Date	Time	Description	Reading	Value
2003/01/01	23:59	A/L RATIO GROSS BLOCKAGE	FP1 REG	0.06
2003/01/01	23:59	A/L RATIO DEGRADATION	FP1 REG	0.14
2003/01/01	23:59	A/L RATIO GROSS BLOCKAGE	FP1 MID	0.13
2003/01/01	23:59	A/L RATIO DEGRADATION	FP1 MID	0.15

ALARM SEQUENCE

Each ISD monitoring test operates once each day on sensor data gathered over a fixed time interval and with a minimum required number of monitored events. The interval is a fixed number of calendar days depending on the test being run. As an example, the A/L degradation Vapor Collection Monitoring test requires seven calendar days of data and at least 30 fueling events. In this example, each daily test result represents a test based on the prior

seven days' time period. When a test first fails, a warning is posted and a warning event is logged. If this condition persists for seven more consecutive days, an alarm is posted, a failure alarm event is logged and the site is shutdown. If the condition continues, additional failure events are logged and the site will continue to be shutdown each day.

ISD ALARM SUMMARY

Table 3 summarizes the ISD Alarms - Alarms with footnote 2 will result in a site shutdown.

Table 3. SD Alarm Summary

Displayed Message	ISD Monitoring Category	Light Indicator	Cause	Suggested Troubleshooting[1]
ISD VAPOR LEAKAGE WARN	Containment	Yellow	Vapor Leakage Detection test warning	•Exhibit 7 Nozzle Bag Test •Exhibit 9/10 Operability Test •T.P. 201.1E-PVV Test •Exhibit 4 Clean Air Separator Test •TP-201.3
ISD VAPOR LEAKAGE FAIL[2]	Containment	Red	Vapor Leakage Detection test - 8th consecutive failure	
ISD GROSS PRESSURE WARN	Containment	Yellow	Gross Over Pressure test warning	•Are ball valves for the clean air separator in the correct position? •Is the ball valve near the pressure sensor in the correct position? •Exhibit 7 Bag Test •T.P. 201.1E-PVV Test •T.P. 201.3 •Look for problems using one or more of the following VR-202 procedures/tests: Dispenser Integrity Test B-3 (i.e. 'Pumbing Tightness' test), Exhibit 4, Exhibit 5, Exhibit 9 (pressure sensor only) or Flow Rate Verification per section 1.2.3.
ISD GROSS PRESSURE FAIL[2]	Containment	Red	Gross Over Pressure test - 8th consecutive failure	
ISD DEGRD PRESSURE WARN	Containment	Yellow	Degradation Over-Pressure test warning	
ISD DEGRD PRESSURE FAIL[2]	Containment	Red	Degradation Over-Pressure test - 30th consecutive failure	
Hnn: GROSS COLLECT WARN	Collection	Yellow	1-Day Gross A/L Test warning	•Visually inspect hanging hardware at the affected fueling point •Exhibit 7 Nozzle Bag Test •VR-202 Exhibit 5
Hnn: GROSS COLLECT FAIL[2]	Collection	Red	1-Day Gross A/L Test failure - 2nd consecutive failure	
Hnn: DEGRD COLLECT WARN	Collection	Yellow	7-Day Degradation A/L Test warning	
Hnn: DEGRD COLLECT FAIL[2]	Collection	Red	7-Day Degradation A/L Test - consecutive failure	
ISD SENSOR OUT WARN	Self-Test	Yellow	ISD Sensor Out Self-Test warning	Confirm ISD sensor & module installation / communication per section 2.
ISD SENSOR OUT FAIL[2]	Self-Test	Red	ISD Sensor Out Self-Test - 8th consecutive failure	
ISD SETUP WARN	Self-Test	Yellow	System Setup Self-Test warning	Confirm EVR / ISD programing per section 3.
ISD SETUP FAIL[2]	Self-Test	Red	System Setup Self-Test failure - 8th consecutive failure	

[1] See ISD Troubleshooting Manual P/N 577013-819 for a complete list of suggestions.

[2] ISD Shutdown Alarms - see “Site Reenable” on page 26.

Table 4 summarizes additional alarms that may be posted by ISD related equipment. These alarms are not critical to vapor recovery functionality, but could indicate erroneous setup or equipment malfunction. NOTE: Additional TLS console alarms listed in the TLS-3XX Operator's manual may be posted and may lead to an ISD shutdown alarm if persistent (see ISD Troubleshooting Manual for details).

Table 4. Other Alarms

Displayed Message	Light Indicator	Set Condition	Clear Condition
MISSING RELAY SETUP	Red	One or more required shutdown alarms have not been assigned to a relay.	Setup required shutdown alarms.
MISSING TANK SETUP	Red	There are no vapor recovery (gasoline) tanks defined or a gasoline pump has not been assigned to a control (shut down) device in at least one tank.	Complete gasoline tank setup.
MISSING HOSE SETUP	Red	There are no product meters assigned to a hose.	Assign at least 1 product meter to a hose.
hnn: VPRFLOW MTR SETUP	Red	Incoming transaction from a hose with an unavailable Vapor Flow Meter.	Configure Vapor Flow Meter (Smart Sensor) and enable it in ISD.
MISSING VAPOR PRES SEN	Red	There is no Vapor Pressure Sensor setup or detected.	Complete Vapor Pressure Sensor setup.
MISSING VAPOR FLOW MTR	Red	There is no Vapor Flow Meter setup or detected.	Complete Vapor Flow Meter setup.
fnn: CHK VAPOR FLOW MTR	Red	Failure of volume measure test - possible problem vapor flow meter.	Volume measure test passes or vapor flow meter deconfigured, or test cleared.

Table 5. Wireless Related Sensor Alarms

Fault Message	Device	Light Indicator	Cause	Suggested Troubleshooting
BATTERY WARNING	Vapor Flow Meter, Pressure Sensor	Yellow	Device transmitter reports battery status as 'Replace' for 24 hours	Remove and replace battery.

Reports

There are two main reports (CP-201 required) that are stored by the ISD system: the Monthly Status Report, stored for 12-months, and the Daily Status Report, stored for 365 days. A third report discussed in this section is the ISD Status Report. You can print out ISD reports from the TLS console front panel as shown in Figure 21.

- The monthly report includes:
  - The Warning Log
  - The Failure Log

- The Misc. Event Log

- The daily report includes:
  - Maximum and minimum ullage pressures
  - Results of the Vapor Containment Monitoring Gross (75th percentile), Degradation (95th percentile) ullage pressure test and Vapor Leakage Detection (CVLD) tests
  - Vapor Collection Monitoring test results for each fueling position
- ISD Status Report
  - Last test report results

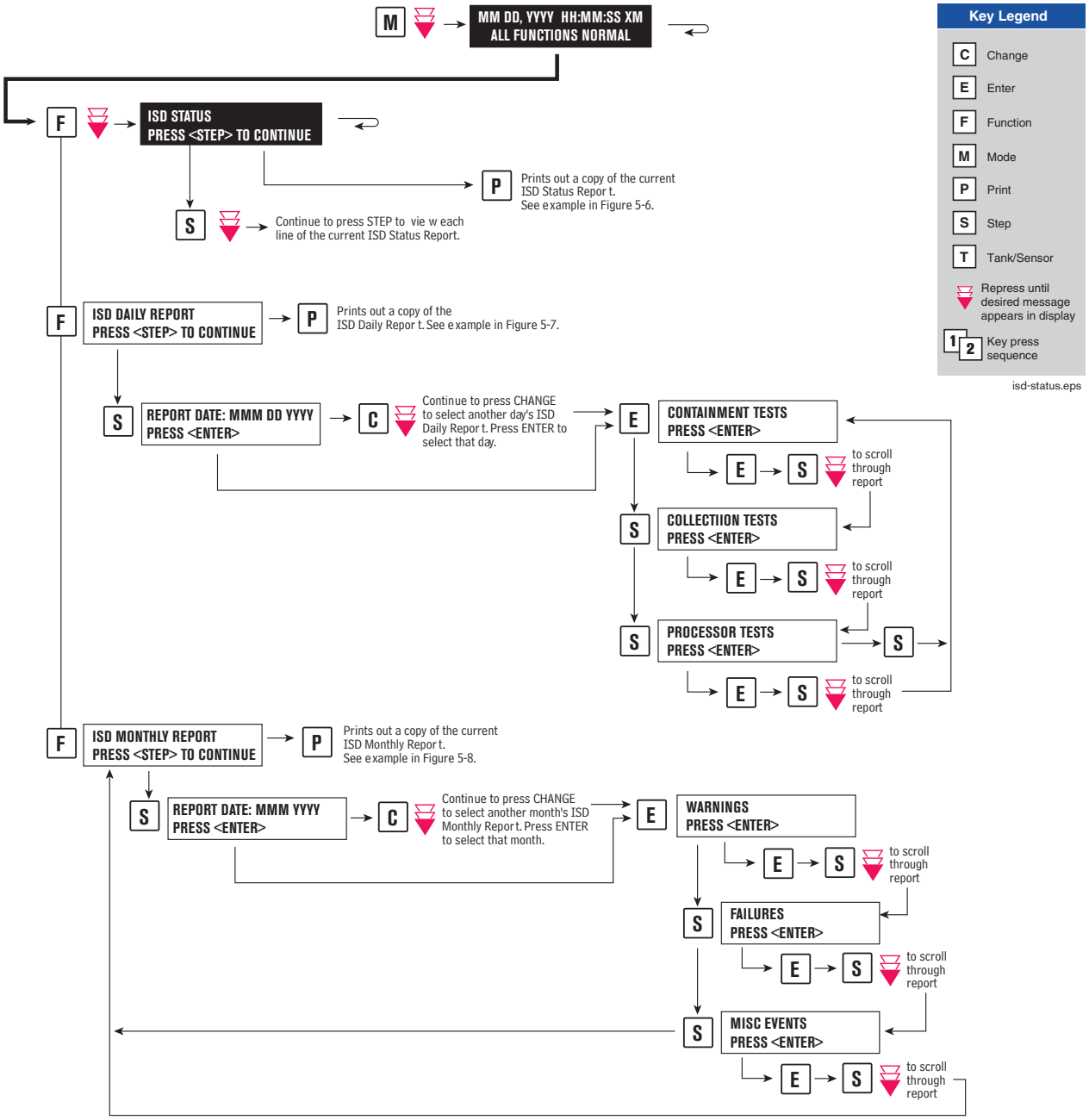

Figure 21. Printing ISD Reports on Console Printer

```
ISD STATUS

(SITE NAME)
(SITE STREET)
(CITY,ST)
(PHONE)

(MMM DD, YYYY HH:MM XM)


EVR TYPE: VACUUM ASSIST
ISD VERSION XX.XX

REPORT DATE:SEP 22, 2004


CONTAINMENT TEST GROSS
STATUS: 0.1"WC PASS

CONTAINMENT TEST DEGRADE
STATUS: -1.1"WC PASS

CONTAINMENT TEST CVLD
STATUS: 3.26CFH PASS

COLLECTION GROSS TEST
STATUS: PASS

COLLECTION DEGRADE TEST
STATUS: PASS

ISD SENSOR SELF TEST
STATUS: PASS

ISD SETUP SELF TEST
STATUS: PASS

STAGE 1 TRANSFER TEST
STATUS:  4 of 4  PASS
```

NOTE: values are for last tests performed

isd-evr\healy5-6.eps

Figure 22. ISD Status Report Example - TLS Console Printout

```
ISD DAILY REPORT

(SITE NAME)
(SITE STREET)
(CITY,ST)
(PHONE)
(MMM DD, YYYY HH:MM XM)

EVR TYPE: VACUUM ASSIST
ISD VERSION XX.XX

REPORT DATE: JAN 20
ISD VERSION XX.XX

OVERALL STATUS   PASS
EVR CONTAINMENT  PASS
EVR COLLECTION   PASS
STAGE1   1 of   1 PASS
SELF TEST        PASS
ISD MONITOR UP-TIME 100%

    ----------------

CONTAINMENT TESTS
GROSS    95%   -0.0  "WC
DGRD     75%   -1.0N "WC
VAPOR LEAK        2  CFH
MAX            -0.8  "WC
MIN            -5.0  "WC

    ----------------

COLLECTION TESTS
GROSS       DGRD
A/L(#)      A/L(#)

FP 1: BLEND
1.04( 51)  1.06(297)
FP 2: BLEND
1.12( 36)  1.10(285)
FP 3: BLEND
1.05( 28)  1.07(231)
FP 4: BLEND
1.03( 45)  1.07(211)
FP 5: BLEND
1.09( 31)  1.08(249)
FP 6: BLEND
0.99( 50)  1.01(417)
FP 7: BLEND
1.04( 52)  1.04(293)
FP 8: BLEND
1.10( 75)  1.09(457)
FP 9: BLEND
1.13( 31)  1.08(281)
FP10: BLEND
1.13( 74)  1.13(463)
FP11: BLEND
1.02( 36)  1.08(233)
FP12: BLEND
1.09( 70)  1.06(488)

    ----------------
SELF TEST

SETUP TEST       PASS
SENSOR OUT TEST  PASS
```

(#) Count max number 999

isd-evr\healyfig5-7.eps

Figure 23. ISD Daily Report Example - TLS Console Printout

```
ISD MONTHLY REPORT

(SITE NAME)
(SITE STREET)
(CITY,ST)
(PHONE)
(MMM DD, YYYY HH:MM XM)

EVR TYPE: VACUUM ASSIST
ISD VERSION XX.XX

REPORT DATE: FEB 2004

OVERALL STATUS   FAIL
EVR CONTAINMENT  PASS
EVR COLLECTION   FAIL
STAGE1  39 of  39 NOTEST
SELF TEST        PASS
ISD MONITOR UP-TIME:100%
EVR/ISD PASS TIME:  85%

    ----------------
DATE  TIME  DEVICE  HOSE
DESCRIPTION        VALUE

    ----------------
LAST 10 WARNINGS

 2-27 23:59 FP06   BLEND
DEGRD COLLECT WARN 0.00

 2-27 23:59 FP05   BLEND
DEGRD COLLECT WARN 0.00

 2-26 23:59 FP05   BLEND
DEGRD COLLECT WARN 0.00

 2-25 23:59 FP06   BLEND
GROSS COLLECT WARN BLKD

 2-25 23:59 FP05   BLEND
GROSS COLLECT WARN BLKD

    ----------------
LAST 10 FAILURES

 2-27 23:59 FP06   BLEND
GROSS COLLECT FAIL BLKD

 2-27 23:59 FP05   BLEND
GROSS COLLECT FAIL BLKD

 2-26 23:59 FP06   BLEND
GROSS COLLECT FAIL BLKD

 2-26 23:59 FP05   BLEND
GROSS COLLECT FAIL BLKD

    ----------------
LAST 10 MISC EVENTS

 2-27-04 11:59PM
DISABLED FP06 BLEND
A/L RATIO GROSS BLOCKAGE

 2-27-04 11:59PM
DISABLED FP05 BLEND
A/L RATIO GROSS BLOCKAGE

 2-26-04 11:59PM
DISABLED FP06 BLEND
A/L RATIO GROSS BLOCKAGE
```

Note: Warning & Failures lists include monitoring results from:
- Containment
- Stage 1
- Collection
- Processor

Up to 10 failures and 10 warnings

FP is fueling position number
BLEND is a hose label
BLKD refers to blocked condition

Note: Events
At least 1 action event for every failure listed above.

Description is truncated to include action. Up to 10 shut down and misc. events.

isd-evr\healyfig5-8.eps

Figure 24. ISD Monthly Report Example - TLS Console Printout

Viewing ISD Reports via RS-232 Connection

CONNECTING LAPTOP TO CONSOLE

Connect your laptop to the TLS console's RS-232 or Multiport card using one of the methods shown in the examples in Figure 25 below.

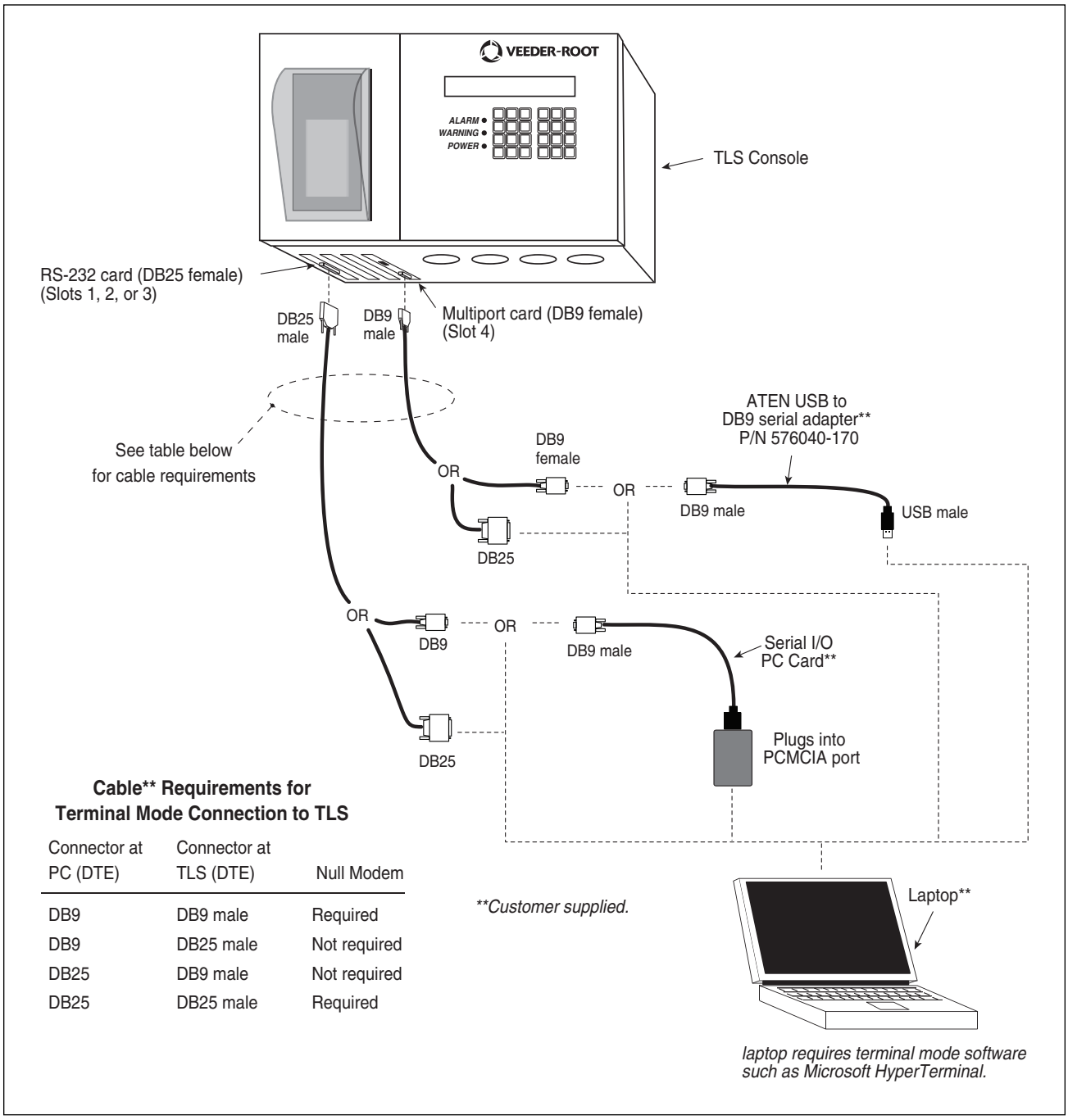

Cable Requirements for Terminal Mode Connection to TLS**

Connector at PC (DTE)	Connector at TLS (DTE)	Null Modem
DB9	DB9 male	Required
DB9	DB25 male	Not required
DB25	DB9 male	Not required
DB25	DB25 male	Required

Figure 25. Connecting Laptop to TLS Console for Serial Communication

CONNECTING LAPTOP TO CONSOLE

1. Open your laptop's serial communication program, e.g., HyperTerminal. You can typically find HyperTerminal under: Start/Programs/Accessories/Communications.
2. After opening the terminal software program, ignore (cancel) any modem/dialing related request windows since you will be directly connecting to the console via serial communications. When the Connection Description window appears (Figure 26), enter a connection name, e.g., TLSDIRECT, and click the OK button.

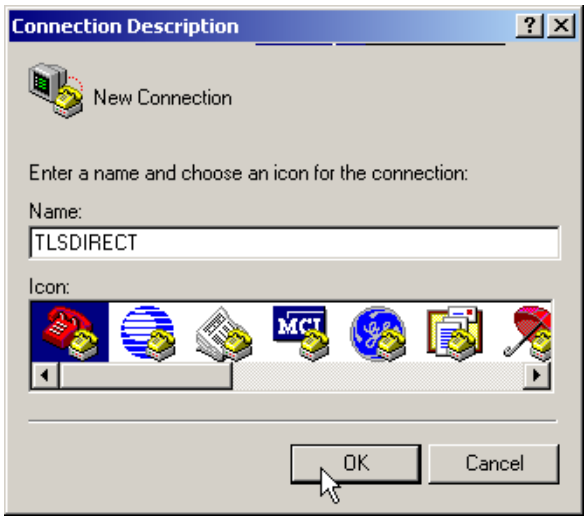

Figure 26. Connection Description Window

3. After clicking the OK button, you may see a repeat of the modem/dialing windows, in which case ignore (cancel) them all.
4. When the Connect To window appears (Figure 27), depending on your connection method, select either COM1 (If RS-232 port on laptop), USB-Serial Controller (if using USB port on laptop), or Serial I/O PC Card (if using PCMCIA port on laptop) in the 'Connect using' drop down box, then click OK button.

.

Figure 27. Connect To Window

5. Next you should see the 'Port Settings' window.

IMPORTANT! The settings of the laptop's com port must match those of the console's com port to which you are connected.

a. Go to the console front panel press the MODE key until you see:

```
SETUP MODE
PRESS <FUNCTION> TO CONT
```

b. Press the FUNCTION key until you see the message:

```
COMMUNICATIONS SETUP
PRESS <STEP> TO CONTINUE
```

c. Press the STEP key until you see the message:

```
PORT SETTINGS
PRESS <ENTER>
```

d. Press the PRINT key to printout the port settings for all communication modules installed in the console. Figure 28 shows an example port settings printout with the RS-232 module installed. Using the console port settings in the example below, your HyperTerminal 'Port Settings' window entries would be Bits per second - 2400, Data bits - 7, Parity - Odd, Stop Bits - 1. For the 'Flow Control' entry select None. Click OK.

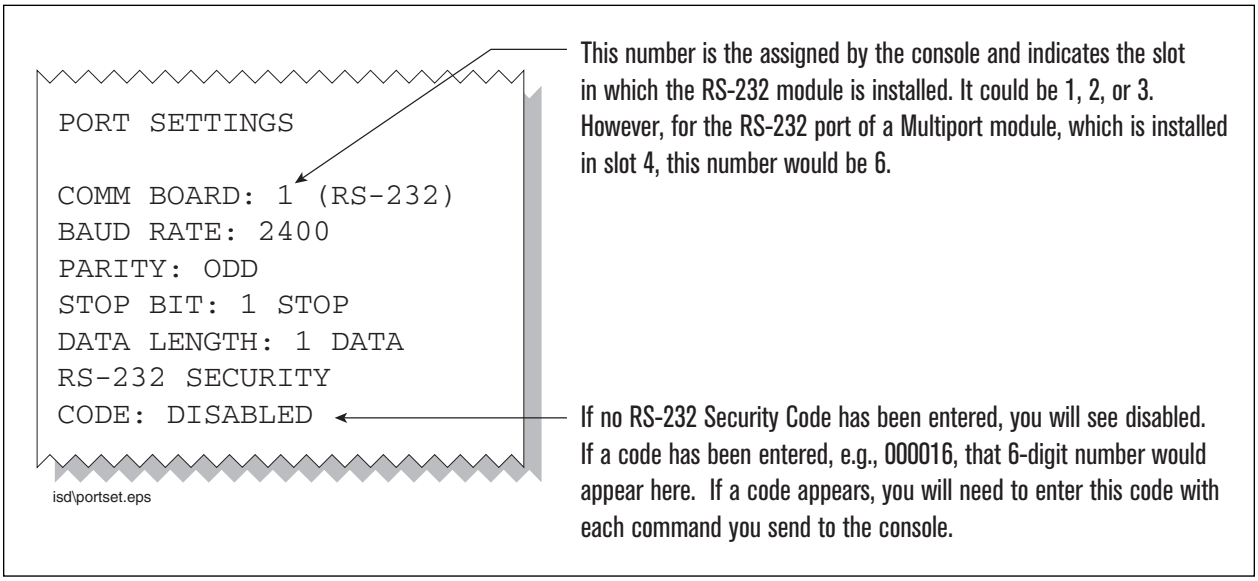

Figure 28. Console Comm Port Settings Printout Example

In the example port settings printout above, the RS-232 Security Code is disabled. If the code was enabled you would see a 6-digit number which you will need to enter to access the console (refer to the 'Sending Console Commands' paragraph below for more information).

6. After entering your port settings, the program's main window appears (Figure 29).

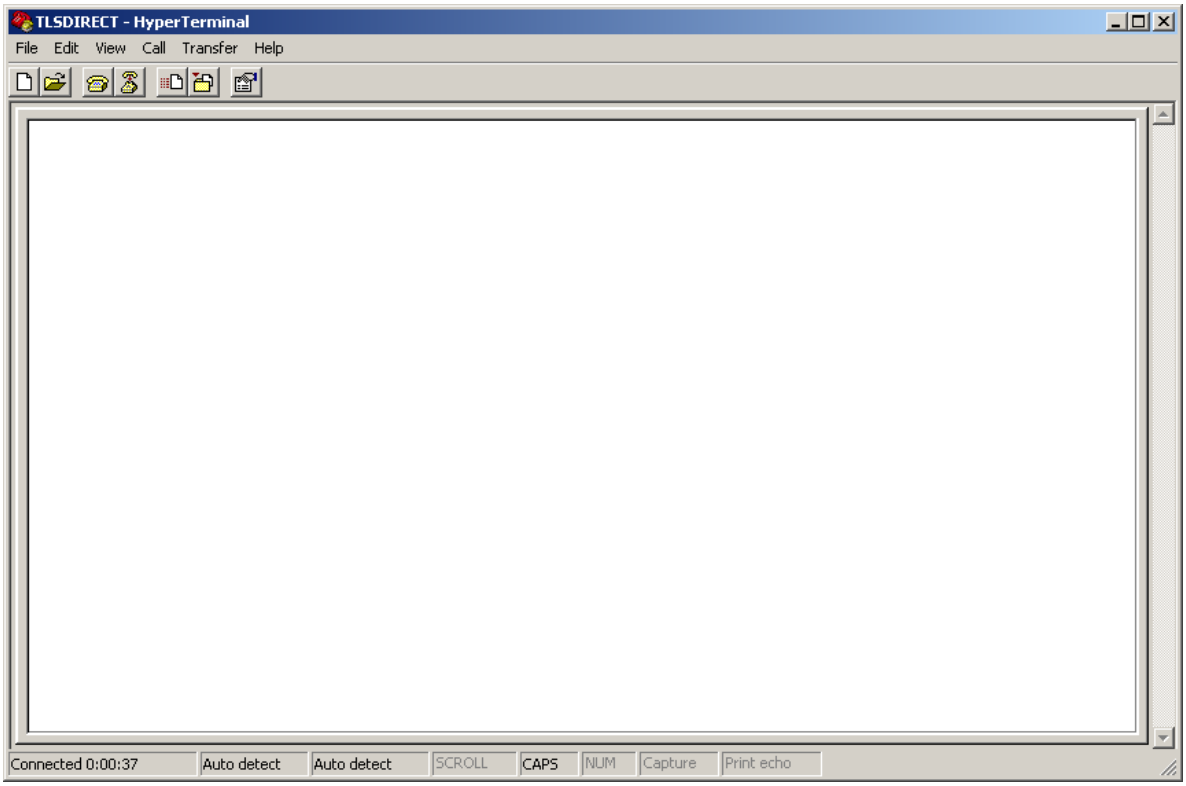

Figure 29. HyperTerminal Main Window

SENDING CONSOLE COMMANDS

Table 2-3 shows three important ISD console commands: IV0500, IV0200, and IV0100. The <SOH> shown in the table means that you must press and hold the **Cntrl** key while you press the **A** key.

For example, let's say you want to see the Daily Report Details for the last 10 days.

Note: If you want to see the characters of the command as you type them in, click on File menu, then select Properties/Settings (tab)/ASCII Setup and click the check box for 'Echo typed characters locally', then click OK to close the window(s) and return to the main screen.

If the RS-232 Security Code is disabled - press and hold the Ctrl key while you press the A key, then type in IV0500010. If the RS-232 Security Code is enabled (e.g., 000016) you must enter the security code before the command - press and hold the Ctrl key while you press the A key, then type in 000016IV0500010.

You will see the typed command on the screen: ☺IV0500010 followed by the response (report) from the console. The ☺ symbol indicates CrtlA and the ♥ symbol indicates the end of the response.

If the console recognizes the command the response displays as soon as the command is typed in.

If the console does not recognize the command you would see something like ☺IV0500010☺9999FF1B♥ which indicates the console did not recognize the command.

All responses (Reports) can be printed or saved to a file. See the terminal program's help file for instructions.

Table 6.- Serial Commands for ISD Alarm, Monthly, and Daily Reports

Report Type	Serial Command (PC to Console)*
Daily Report Details (See example Figure 32)	<SOH>IV0500ddd Where ddd = number of days, 001 = yesterday and today, 002 = two days ago, etc.
Monthly Status Report (See example Figure 31)	<SOH>IV0200yyyymm Where yyyy = year number, e.g. 2003, mm = month number, 01 = January, 02 = February, etc.
Alarm Status (See example Figure 30)	<SOH>IV0100

*<SOH> = Control A. For more information on TLS console serial commands, refer to the V-R Serial Interface Manual.

```
IV0500
MAR  1, 2004 12:20 AM

(SITE NAME)
(SITE STREET)
(CITY,ST)
(PHONE)
(MMM DD, YYYY HH:MM XM)

ISD DAILY REPORT DETAILS

EVR TYPE: VACUUM ASSIST
ISD TYPE: XX.XX
VAPOR PROCESSOR TYPE: NO VAPOR PROCESSOR

OVERALL STATUS             :FAIL            EVR VAPOR COLLECTION :FAIL
EVR VAPOR CONTAINMENT      :PASS
ISD MONITOR UP-TIME        :100%            STAGE I TRANSFERS: 39 of 39 PASS
EVR/ISD PASS TIME          : 85%

Status Codes: (W)Warn (F)Fail (D)Degradation Fail (G)Gross Fail
(ISD-W)ISD Self-Test Warning (ISD-F)ISD Self-Test Fail (N)No Test

       ISD   ISD  ---CONTAINMENT TESTS---     STAGE        ---COLLECTION TESTS
       EVR   %UP  GROSS  DGRD  MAX  MIN  LEAK   I   VAPOR  FP1   FP2   FP3
DATE  STATUS TIME  95%    75%  "WC  "WC  CFH   XFR  PRCSR  BLEND BLEND BLEND
02/10   PASS 100% -1.4N -3.1N -1.1 -5.0    0N PASS         1.09  1.10  1.11
02/11   PASS 100% -1.7N -3.5N  0.4 -5.0    0N PASS         1.05  1.14  1.06
02/12   PASS 100% -1.7N -3.4N -1.2 -5.0    0N              1.06  1.07  1.05
02/13   PASS 100% -1.8N -3.4N -1.0 -5.0    2N PASS         1.08  1.10  1.00
02/14   PASS 100% -1.6N -3.3N -0.3 -5.0    2N PASS         1.05  1.09  1.08
02/15   PASS 100% -1.5N -3.3N  1.3 -5.0    2  PASS         1.07  1.11  1.05
02/16   PASS 100% -1.2  -3.0N -0.3 -5.0    3  PASS         1.06  1.10  1.14
02/17   PASS 100% -1.2  -2.9N  0.0 -5.0    3  PASS         1.06N 1.10N 1.14
02/18   PASS 100% -1.0  -2.9N  1.0 -5.0    3  PASS         1.06N 1.10N 1.06
02/19   PASS 100% -0.9  -2.9N  1.6 -5.0    4  PASS         1.06N 1.10N 1.09
02/20   PASS 100% -0.6  -2.7N  2.9 -5.0    4  PASS         1.06N 1.10N 1.03
02/21   PASS 100% -0.6  -2.7N  1.1 -5.0    1  PASS         1.06N 1.10N 1.13
02/22   PASS 100%  0.1  -2.5N  3.1 -5.0    0  PASS         1.06N 1.10N 1.03
02/23   PASS 100%  0.1  -2.6N  0.9 -5.0    0  PASS         1.06N 1.10N 1.04
02/24   PASS 100%  0.2  -2.6N  0.9 -5.0    0  PASS         1.08  1.09  1.07
02/25   W    100%  0.8  -2.3N  2.8 -5.0    0  PASS         1.10  1.11  1.08
02/26   F    100%  1.1  -2.2N  5.0 -5.0    0  PASS         1.10  1.12  1.11
02/27   F    100%  1.0  -2.4N -0.8 -5.0    0  PASS         1.11  1.13  1.11
02/28   PASS 100%  1.0  -2.4N  0.3 -5.0    0  PASS         1.09  1.16  1.08
02/29   PASS 100%  0.9  -2.3N  1.6 -5.0    0  PASS         1.01  1.14  1.08N

---COLLECTION TESTS-DAILY AVERAGE HOSE A/L RATIO-----------------------------
      FP4   FP5   FP6   FP7   FP8   FP9   FP10  FP11  FP12
DATE  BLEND BLEND BLEND BLEND BLEND BLEND BLEND BLEND BLEND
02/10 1.12  1.03  0.97  1.04  1.07  1.05  1.09  1.08  1.06
02/11 1.09  1.04  1.04  0.98  1.03  1.06  1.06  1.14  1.07
02/12 1.10  1.09  1.04  1.04  1.06  1.09  1.10  1.03  1.04
02/13 1.06  1.11  1.04  1.07  1.09  1.08  1.09  1.13  1.08
02/14 1.05  1.07  1.05  1.07  1.02  1.07  1.08  1.13  1.06
02/15 1.07  1.04  1.04  0.94  1.09  1.05  1.08  1.13  1.07
02/16 1.09  1.08  1.06  1.05  1.10  1.06  1.13  1.03  1.04
02/17 1.08  1.05  1.05  1.06  1.08  1.13  1.10  1.10  1.07
02/18 1.08  1.06  1.05  1.03  1.08  1.00  1.09  1.05  1.09
02/19 1.09  1.11  1.04  1.01  1.08  1.06  1.08  1.06  1.05
02/20 1.07  1.07  1.05  1.05  1.10  1.12  1.10  1.11  1.07
02/21 1.08  1.10  1.06  1.00  1.07  1.13  1.16  1.09  1.09
02/22 1.08  1.04  1.09  1.05  1.09  1.06  1.10  1.11  1.10
02/23 1.06  1.17  1.09  1.06  1.12  1.09  1.14  1.12  1.08
02/24 1.10  1.12  1.08  0.98  1.08  1.11  1.15  1.11  1.02
02/25 1.10  BLKDW BLKDW 1.07  1.06  1.09  1.16  1.03  1.05
02/26 1.11  BLKDF BLKDF 1.05  1.10  1.11  1.10  1.08  1.05
02/27 1.12  BLKDF BLKDF 1.08  1.08  1.06  1.15  1.13  1.09
02/28 1.08  1.11  1.08  1.07  1.07  1.10  1.18  1.05  1.08
02/29 1.09  1.14  1.08  1.03  1.10  1.06  1.19  1.09  1.09
```

isd-evr\healyfig5-9.eps

Figure 30. ISD Daily Report Details - Serial to PC Format

```
IV0200
MAR  1, 2004 12:20 AM

(SITE NAME)
(SITE STREET)
(CITY,ST)
(PHONE)
(MMM DD, YYYY HH:MM XM)

ISD MONTHLY STATUS REPORT

EVR TYPE: VACUUM ASSIST
ISD TYPE: XX.XX
VAPOR PROCESSOR TYPE: NO VAPOR PROCESSOR

OVERALL STATUS             :FAIL            EVR VAPOR COLLECTION :FAIL
EVR VAPOR CONTAINMENT      :PASS
ISD MONITOR UP-TIME        :100%            STAGE I TRANSFERS: 39 of 39 PASS
EVR/ISD PASS TIME          : 85%

CARB EVR CERTIFIED OPERATING REQUIREMENTS
                                                MIN      MAX
VAPOR COLLECTION ASSIST SYSTEM A/L RANGE        0.95     1.15

ISD MONITORING TEST PASS/FAIL THRESHOLDS
                                                  PERIOD    BELOW  ABOVE

VAPOR COLLECTION ASSIST SYSTEM A/L GROSS FAIL      1DAYS     0.33  1.90
VAPOR COLLECTION ASSIST SYSTEM A/L DEGRADATION FAIL  7DAYS     0.81  1.32

VAPOR CONTAINMENT GROSS FAIL, 95th PERCENTILE      7DAYS     ----  1.30"wcg
VAPOR CONTAINMENT DEGRADATION, 75th PERCENTILE    30DAYS     ----  0.30"wcg
VAPOR CONTAINMENT LEAK DETECTION FAIL @2"WCG       7DAYS     ----  8.50cfh
STAGE I VAPOR TRANSFER FAIL, 50th PERCENTILE      20MINS     ----  2.50"wcg


WARNING ALARMS
DATE     TIME     DESCRIPTION                    READING         VALUE
04-02-27 23:59:00 A/L RATIO DEGRADATION          FP 6 BLEND        0.80
04-02-27 23:59:00 A/L RATIO DEGRADATION          FP 5 BLEND        0.76
04-02-26 23:59:00 A/L RATIO DEGRADATION          FP 5 BLEND        0.79
04-02-25 23:59:00 A/L RATIO GROSS BLOCKAGE       FP 6 BLEND       BLKD
04-02-25 23:59:00 A/L RATIO GROSS BLOCKAGE       FP 5 BLEND       BLKD

FAILURE ALARMS
DATE     TIME     DESCRIPTION                    READING         VALUE
04-02-27 23:59:00 A/L RATIO GROSS BLOCKAGE       FP 6 BLEND       BLKD
04-02-27 23:59:00 A/L RATIO GROSS BLOCKAGE       FP 5 BLEND       BLKD
04-02-26 23:59:00 A/L RATIO GROSS BLOCKAGE       FP 6 BLEND       BLKD
04-02-26 23:59:00 A/L RATIO GROSS BLOCKAGE       FP 5 BLEND       BLKD

SHUTDOWN & MISCELLANEOUS EVENTS
DATE     TIME     DESCRIPTION                    ACTION/NAME
04-02-27 23:59:00 A/L RATIO GROSS BLOCKAGE      DISABLED FP 06 BLEND
04-02-27 23:59:00 A/L RATIO GROSS BLOCKAGE      DISABLED FP 05 BLEND
04-02-26 23:59:00 A/L RATIO GROSS BLOCKAGE      DISABLED FP 06 BLEND
04-02-26 23:59:00 A/L RATIO GROSS BLOCKAGE      DISABLED FP 05 BLEND
04-02-15 23:59:00 READINESS ISD:PP EVR:PP       ISD & EVR READY
04-02-14 23:59:00 READINESS ISD:PP EVR:PN       EVR READINESS PENDING
04-02-13 23:59:00 READINESS ISD:PP EVR:PN       EVR READINESS PENDING
04-02-12 23:59:00 READINESS ISD:PP EVR:PN       EVR READINESS PENDING
04-02-11 23:59:00 READINESS ISD:PP EVR:PN       EVR READINESS PENDING
04-02-10 23:59:00 READINESS ISD:PP EVR:PN       EVR READINESS PENDING
```

isd-evr\healyfig5-10.eps

Figure 31. ISD Monthly Status Report - Serial to PC Format

```
IV0100
MAR  1, 2004 12:05 AM

(SITE NAME)
(SITE STREET)
(CITY,ST)
(PHONE)
(MMM DD, YYYY HH:MM XM)

ISD ALARM STATUS REPORT

EVR TYPE: VACUUM ASSIST
ISD TYPE: XX.XX
VAPOR PROCESSOR TYPE: NO VAPOR PROCESSOR

OVERALL STATUS             :PASS            EVR VAPOR COLLECTION :PASS
EVR VAPOR CONTAINMENT      :PASS
ISD MONITOR UP-TIME        :100%            STAGE I TRANSFERS:  2 of  2 PASS
EVR/ISD PASS TIME          :100%

WARNING ALARMS
DATE     TIME     DESCRIPTION                     READING         VALUE
04-02-27 23:59:01 A/L RATIO DEGRADATION           FP 6 BLEND        0.80
04-02-27 23:59:01 A/L RATIO DEGRADATION           FP 5 BLEND        0.76
04-02-26 23:59:00 A/L RATIO DEGRADATION           FP 5 BLEND        0.79
04-02-25 23:59:01 A/L RATIO GROSS BLOCKAGE        FP 6 BLEND       BLKD
04-02-25 23:59:01 A/L RATIO GROSS BLOCKAGE        FP 5 BLEND       BLKD

FAILURE ALARMS
DATE     TIME     DESCRIPTION                     READING         VALUE
04-02-27 23:59:01 A/L RATIO GROSS BLOCKAGE        FP 6 BLEND       BLKD
04-02-27 23:59:01 A/L RATIO GROSS BLOCKAGE        FP 5 BLEND       BLKD
04-02-26 23:59:00 A/L RATIO GROSS BLOCKAGE        FP 6 BLEND       BLKD
04-02-26 23:59:00 A/L RATIO GROSS BLOCKAGE        FP 5 BLEND       BLKD

SHUTDOWN & MISCELLANEOUS EVENTS
DATE     TIME     DESCRIPTION                     ACTION/NAME
04-02-27 23:59:01 A/L RATIO GROSS BLOCKAGE       DISABLED FP 06 BLEND
04-02-27 23:59:01 A/L RATIO GROSS BLOCKAGE       DISABLED FP 05 BLEND
04-02-26 23:59:00 A/L RATIO GROSS BLOCKAGE       DISABLED FP 06 BLEND
04-02-26 23:59:00 A/L RATIO GROSS BLOCKAGE       DISABLED FP 05 BLEND
04-02-15 23:59:00 READINESS ISD:PP EVR:PP        ISD & EVR READY
04-02-14 23:59:00 READINESS ISD:PP EVR:PN        EVR READINESS PENDING
04-02-13 23:59:00 READINESS ISD:PP EVR:PN        EVR READINESS PENDING
04-02-12 23:59:00 READINESS ISD:PP EVR:PN        EVR READINESS PENDING
04-02-11 23:59:00 READINESS ISD:PP EVR:PN        EVR READINESS PENDING
04-02-10 23:59:00 READINESS ISD:PP EVR:PN        EVR READINESS PENDING
```

isd-evr\healyfig5-11.eps

Figure 32. ISD Alarm Status Report - Serial to PC Format

Maintenance

TLS Console

The TLS console, including interface modules, do not require scheduled maintenance, but the station operator is responsible to ensure printer paper is properly loaded and front panel indicator lights are operational. ISD System Self-Test Monitoring algorithms are designed to verify proper selection, setup and operation of the TLS console and sensors. Servicing should be performed in accordance with the In-Station Diagnostic System Troubleshooting Guide, Manual 577013-819 in response to warning or alarm conditions.

Vapor Flow Meter

There is no recommended maintenance, inspection nor calibration for the Vapor Flow Meter. Servicing should be performed in accordance with the In-Station Diagnostic System Troubleshooting Guide, Manual 577013-819 in response to warning or alarm conditions.

Vapor Pressure Sensor

There is no recommended maintenance, inspection nor calibration for the Vapor Pressure Sensor. Servicing should be performed in accordance with the In-Station Diagnostic System Troubleshooting Guide, Manual 577013-819 in response to warning or alarm conditions.

Diagnostic Menus

The diagnostic menus below are accessed and viewed from the TLS console front panel.

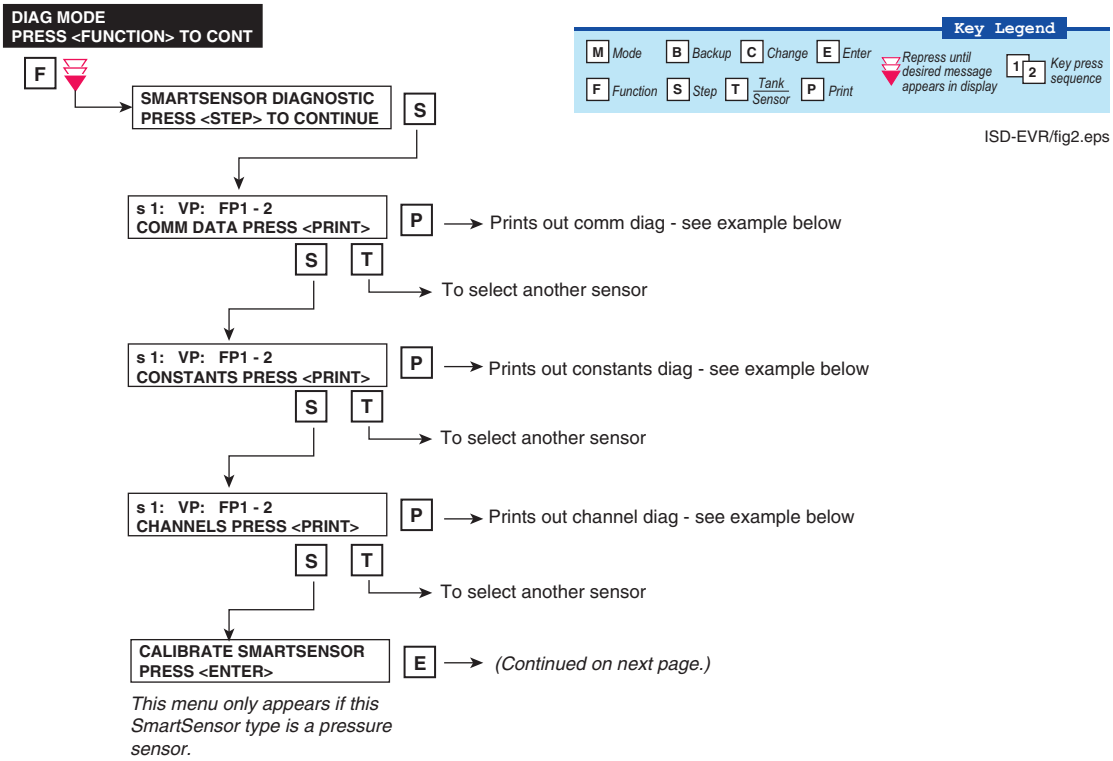

ISD-EVR/fig2.eps

```
SS COMM DIAG
-----------------------
s 1: AFM1    FP1-2
SAMPLES READ     58
SAMPLES USED     54
PARITY ERR        0
PARTIAL READ      0
COMM ERR          0
RESTARTS          0
```

```
SS CONSTANTS DIAG
-----------------------
s 1: AFM1    FP1-2

VAPOR PRESSURE
SERIAL NUMBER      1007
PROTOCOL VERSION      0
```

```
SS CHANNEL DIAG
-----------------------
s 1: AFM1    FP1-2
YY-MM-DD  HH:MM:SS
C00 B50B 3D68 00E0 0000
C04 0000 03EF 0000 0004
C08 0A3C 3D68 5693 0081
C12 80C4 80A4 0104 2579
C16 0000 0000 00A3 03D6
C20 0709 0032 04C9 880F
```

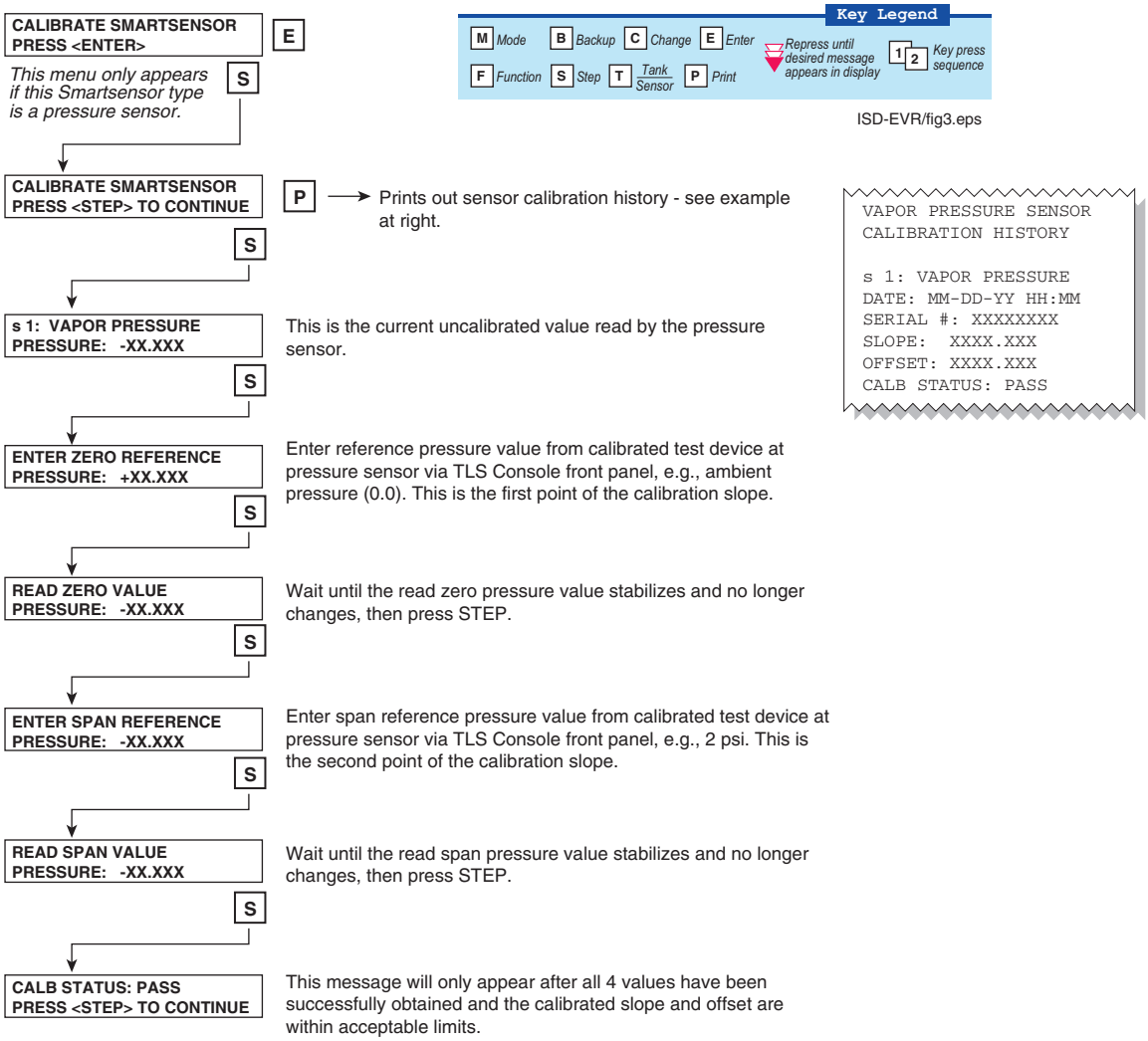
Key Legend
M Mode
B Backup
C Change
E Enter
F Function
S Step
T Tank Sensor
P Print
Repress until desired message appears in display
1 2 Key press sequence
ISD-EVR/fig3.eps
CALIBRATE SMARTSENSOR
PRESS <ENTER>
E
This menu only appears if this Smartsensor type is a pressure sensor.
S
CALIBRATE SMARTSENSOR
PRESS <STEP> TO CONTINUE
P
Prints out sensor calibration history - see example at right.
VAPOR PRESSURE SENSOR
CALIBRATION HISTORY
s 1: VAPOR PRESSURE
DATE: MM-DD-YY HH:MM
SERIAL #: XXXXXXXX
SLOPE: XXXX.XXX
OFFSET: XXXX.XXX
CALB STATUS: PASS
S
s 1: VAPOR PRESSURE
PRESSURE: -XX.XXX
This is the current uncalibrated value read by the pressure sensor.
S
ENTER ZERO REFERENCE
PRESSURE: +XX.XXX
Enter reference pressure value from calibrated test device at pressure sensor via TLS Console front panel, e.g., ambient pressure (0.0). This is the first point of the calibration slope.
S
READ ZERO VALUE
PRESSURE: -XX.XXX
Wait until the read zero pressure value stabilizes and no longer changes, then press STEP.
S
ENTER SPAN REFERENCE
PRESSURE: -XX.XXX
Enter span reference pressure value from calibrated test device at pressure sensor via TLS Console front panel, e.g., 2 psi. This is the second point of the calibration slope.
S
READ SPAN VALUE
PRESSURE: -XX.XXX
Wait until the read span pressure value stabilizes and no longer changes, then press STEP.
S
CALB STATUS: PASS
PRESS <STEP> TO CONTINUE
This message will only appear after all 4 values have been successfully obtained and the calibrated slope and offset are within acceptable limits.

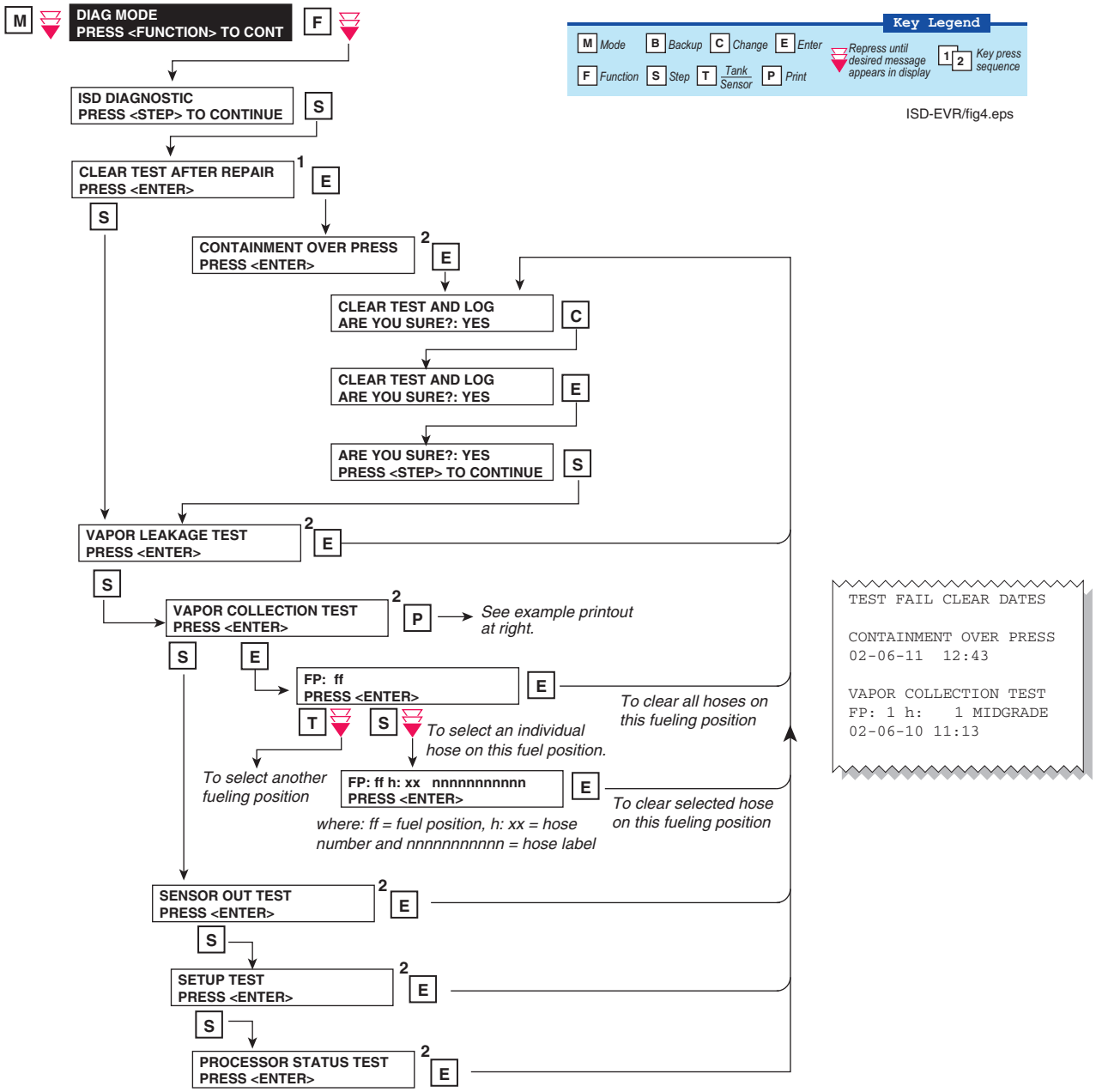

ISD-EVR/fig4.eps

```
TEST FAIL CLEAR DATES

CONTAINMENT OVER PRESS
02-06-11  12:43

VAPOR COLLECTION TEST
FP: 1 h:   1 MIDGRADE
02-06-10 11:13
```

Notes:

1. All repair dates are saved in the Miscellaneous Event Log.
2. Reference the Clear Test Repair Menu table on the next page.

Table 7. Clear Test Repair Menu

Menu Selection	Clears Alarms	Reset Dates
Containment Over Press	ISD GROSS PRESSURE WARN ISD GROSS PRESSURE FAIL ISD DEGRD PRESSURE WARN ISD DEGRD PRESSURE FAIL	Containment Test Time
Vapor Leakage Test	ISD VAPOR LEAKAGE WARN ISD VAPOR LEAKAGE FAIL	Vapor Leak Test Time
Vapor Collection Test	GROSS COLLECT WARN GROSS COLLECT FAIL DEGRD COLLECT WARN DEGRD COLLECT FAIL AIRFLOW MTR SETUP	Hose Test Time
Sensor Out Test	ISD SENSOR OUT WARN ISD SENSOR OUT FAIL	Sensor Out Test Time
Setup Test	ISD SETUP WARN ISD SETUP FAIL	Setup Self Test Time

Appendix A: Site EVR/ISD Equipment Location Worksheet

You should create a table listing each hose, fueling point, Air Flow Meter's serial number, etc.. This information will be required when you perform the EVR/ISD Setup hose/meter dispenses. This appendix contains blank worksheets for sites with single- and multi-hose dispensers. You are advised to fill in all of the appropriate information about your installed equipment, complete the TLS console's EVR/ISD setup, then perform the Product Meter ID dispensing procedure.

Single-Hose Fueling Position Dispensers

FILL OUT - USE TO SETUP HOSE TABLE					AUTOMAP CHECK LIST			
					Product Dispense(s)⑥			
Hose ID①	FP②	Hose Label③	AFM Serial Number④	AFM Label⑤	1st	2nd	3rd	4th
1		Blend		AFM FP__&__				
2		Blend						
3		Blend		AFM FP__&__				
4		Blend						
5		Blend		AFM FP__&__				
6		Blend						
7		Blend		AFM FP__&__				
8		Blend						
9		Blend		AFM FP__&__				
10		Blend						
11		Blend		AFM FP__&__				
12		Blend						
13		Blend		AFM FP__&__				
14		Blend						
15		Blend		AFM FP__&__				
16		Blend						

①Each hose must have a unique number (1 - 99).

②This is the Fuel Position Label which is the visible number on the outside of the dispenser (1 -2 digits).

③The hose label is always Blend for single-hose dispensers.

④This is the serial number on the Air Flow Meter (1 per dispenser).

⑤This is the AFM label entered in EVR/ISD setup (1 per dispenser and must be in the format shown, e.g., AFM FP1&2 - *where 1 and 2 refer to the one [or two] numbers on the outside of the dispenser*).

⑥After you have entered the contents of columns 1 - 5 into the TLS EVR/ISD hose table setup, you now must follow automap procedure and dispense from each gas meter AND one blend grade that feeds each hose. Enter a check beneath each product following a dispense from the hose.

FILL OUT - USE TO SETUP HOSE TABLE					AUTO MAP CHECK LIST			
					Product Dispense(s)			
Hose ID	FP	Hose Label	AFM Serial Number	AFM Label	1st	2nd	3rd	4th
17		Blend		AFM FP__&__				
18		Blend						
19		Blend		AFM FP__&__				
20		Blend						
21		Blend		AFM FP__&__				
22		Blend						
23		Blend		AFM FP__&__				
24		Blend						
25		Blend		AFM FP__&__				
26		Blend						
27		Blend		AFM FP__&__				
28		Blend						
29		Blend		AFM FP__&__				
30		Blend						
31		Blend		AFM FP__&__				
32		Blend						
33		Blend		AFM FP__&__				
34		Blend						
35		Blend		AFM FP__&__				
36		Blend						

FILL OUT - USE TO SETUP HOSE TABLE					AUTO MAP CHECK LIST			
					Product Dispense(s)			
Hose ID	FP	Hose Label	AFM Serial Number	AFM Label	1st	2nd	3rd	4th
		Blend		AFM FP__&__				
		Blend						
		Blend		AFM FP__&__				
		Blend						
		Blend		AFM FP__&__				
		Blend						
		Blend		AFM FP__&__				
		Blend						
		Blend		AFM FP__&__				
		Blend						
		Blend		AFM FP__&__				
		Blend						
		Blend		AFM FP__&__				
		Blend						
		Blend		AFM FP__&__				
		Blend						
		Blend		AFM FP__&__				
		Blend						
		Blend		AFM FP__&__				
		Blend						
		Blend		AFM FP__&__				
		Blend						
		Blend		AFM FP__&__				
		Blend						
		Blend		AFM FP__&__				
		Blend						
		Blend		AFM FP__&__				
		Blend						
		Blend		AFM FP__&__				
		Blend						

Multi-Hose Fueling Position Dispensers

FILL OUT - USE TO SETUP HOSE TABLE					AUTOMAP CHECK LIST
Hose ID①	**FP②**	**Hose Label③**	**AFM Serial Number④**	**AFM Label⑤**	**Product Dispense⑥**
				AFM FP__&__	
				AFM FP__&__	

①Each hose must have a unique number (1 - 99).

②This is the Fuel Position Label which is the visible number on the outside of the dispenser (1 -2 digits).

③The hose label is the grade.

④This is the serial number on the Air Flow Meter (1 per dispenser).

⑤This is the AFM label entered in EVR/ISD setup (1 per dispenser and must be in the format shown, e.g., AFM FP1&2 - *where 1 and 2 refer to the one [or two] numbers on the outside of the dispenser*).

⑥After you have entered the contents of columns 1 - 5 into the TLS EVR/ISD hose table setup, you now must follow automap procedure and dispense from each hose. Enter a check in this column following a dispense from the hose.

FILL OUT - USE TO SETUP HOSE TABLE					AUTOMAP CHECK LIST
Hose ID①	**FP②**	**Hose Label③**	**AFM Serial Number④**	**AFM Label⑤**	**Product Dispense⑥**
				AFM FP__&__	
				AFM FP__&__	
				AFM FP__&__	

FILL OUT - USE TO SETUP HOSE TABLE					AUTOMAP CHECK LIST
Hose ID①	**FP②**	**Hose Label③**	**AFM Serial Number④**	**AFM Label⑤**	**Product Dispense⑥**
				AFM FP__&__	
				AFM FP__&__	
				AFM FP__&__	

FILL OUT - USE TO SETUP HOSE TABLE					AUTOMAP CHECK LIST
Hose ID①	**FP②**	**Hose Label③**	**AFM Serial Number④**	**AFM Label⑤**	**Product Dispense⑥**
				AFM FP__&__	
				AFM FP__&__	
				AFM FP__&__	

FILL OUT - USE TO SETUP HOSE TABLE					AUTOMAP CHECK LIST
Hose ID①	**FP②**	**Hose Label③**	**AFM Serial Number④**	**AFM Label⑤**	**Product Dispense⑥**
				AFM FP__&__	
				AFM FP__&__	
				AFM FP__&__	

VEEDER-ROOT

For technical support, sales or other assistance, please visit: .veeder.com

ISD Vapor Flow Meter

Installation Guide

VEEDER-ROOT

Notice

Veeder-Root makes no warranty of any kind with regard to this publication, including, but not limited to, the implied warranties of merchantability and fitness for a particular purpose.

Veeder-Root shall not be liable for errors contained herein or for incidental or consequential damages in connection with the furnishing, performance, or use of this publication.

Veeder-Root reserves the right to change system options or features, or the information contained in this publication as approved by ARB.

This publication contains proprietary information which is protected by copyright. All rights reserved. No part of this publication may be modified or translated to another language without the prior written consent of Veeder-Root.

Contact TLS Systems Technical Support for additional troubleshooting information at 800-323-1799.

DAMAGE CLAIMS / LOST EQUIPMENT

Thoroughly examine all components and units as soon as they are received. If any cartons are damaged or missing, write a complete and detailed description of the damage or shortage on the face of the freight bill. The carrier's agent must verify the inspection and sign the description. Refuse only the damaged product, not the entire shipment.

Veeder-Root must be notified of any damages and/or shortages within 30 days of receipt of the shipment, as stated in our Terms and Conditions.

VEEDER-ROOT'S PREFERRED CARRIER

1. Contact Veeder-Root Customer Service at 800-873-3313 with the specific part numbers and quantities that were missing or received damaged.
2. Fax signed Bill of Lading (BOL) to Veeder-Root Customer Service at 800-234-5350.
3. Veeder-Root will file the claim with the carrier and replace the damaged/missing product at no charge to the customer. Customer Service will work with production facility to have the replacement product shipped as soon as possible.

CUSTOMER'S PREFERRED CARRIER

1. It is the customer's responsibility to file a claim with their carrier.
2. Customer may submit a replacement purchase order. Customer is responsible for all charges and freight associated with replacement order. Customer Service will work with production facility to have the replacement product shipped as soon as possible.
3. If "lost" equipment is delivered at a later date and is not needed, Veeder-Root will allow a Return to Stock without a restocking fee.
4. Veeder-Root will NOT be responsible for any compensation when a customer chooses their own carrier.

RETURN SHIPPING

For the parts return procedure, please follow the appropriate instructions in the "General Returned Goods Policy" pages in the "Policies and Literature" section of the Veeder-Root **North American Environmental Products** price list. Veeder-Root will not accept any return product without a Return Goods Authorization (RGA) number clearly printed on the outside of the package.

FOR INSTALLATIONS IN THE STATE OF CALIFORNIA

Please refer to the California Air Resources Board Vapor Recovery Certification Phase II EVR Executive Order web site (*www.arb.ca.gov/vapor/eo-evrphaseII.htm*) for the latest manual revisions pertaining to Executive Order VR202 (Healy Phase II EVR System Including ISD System).

©Veeder-Root 2013. All rights reserved.

ISD Vapor Flow Meter Installation

Contractor Certification Requirements 1
Product Marking Information 2
Safety Warnings 3
Safety Precautions 4
Related Manuals 4
Before You Begin 4
Veeder-Root Parts 5
Tools Required 5
Installation Steps - Vacuum Assist System Above Shear Valve 6
Installation Steps - Vacuum Assist System Below Shear Valve 8
Seal and Connect Field Wiring 11

Figures

Figure 1. Example Vapor Flow Meter Installation Above Shear Valve 7
Figure 2. Field wiring Vapor Flow Meter - Observe Polarity 8
Figure 3. Example flow meter installations with approximate clearances 9
Figure 4. Example Vapor Flow Meter Installation Below Shear Valve 10
Figure 5. Epoxy sealing field wiring 11
Figure 6. Connecting Vapor Flow Meter to TLS-350 Smart Sensor Interface Module 12
Figure 7. Connecting Vapor Flow Meter to TLS-450 USM Module 12

ISD Vapor Flow Meter Installation

This manual contains instructions to install a Veeder-Root ISD (In-Station Diagnostic) Vapor Flow Meter in a dispenser's vapor return line in vacuum assist systems.

This manual assumes all preliminary site preparation is completed, and that wiring from the console to the Vapor Flow Meter junction box is in place and meets the requirements set out in the applicable console Site Prep and/or TLS RF Wireless 2 system (W2) installation manuals.

Contractor Certification Requirements

Veeder-Root Contractor Certification Requirements	Installer Certification[6]	ATG Technician Certification[7]	VR Vapor Products Certification[8]
Install[1] ISD	X	X	X
Install PMC	X	X	X
Install CCVP	X	X	X
Install Wireless ISD/PMC	X	X	X
Installation Checkout[2]		X	X
ATG Startup[3] / Training[4] / Service[5]		X	X
ISD Startup / Training / Service			X
PMC Startup / Training / Service			X
CCVP Startup / Training / Service			X
Wireless ISD/PMC Startup / Training / Service			X
Install Pressure Sensor (ATG)	X	X	X
Maintain Pressure Sensor (ATG)		X	X
Calibrate Pressure Sensor (ATG)		X	X
Clear ATG Pressure Sensor Alarm (ATG)		X	X
Clear ISD/PMC Alarms (ISD/PMC)			X

[1]Perform wiring and conduit touting; equipment mounting
[2]Inspect wiring and conduit routing; equipment mounting
[3]Turn power on, program and test the systems
[4]Provide supervised field experience in service techniques and operations
[5]Troubleshoot and provide routing maintenance
[6]UST Monitoring Systems – Installer (Level 1)
[7]Certified UST Monitoring Technician
[8]VR Vapor Products

Warranty Registrations may only be submitted by selected Distributors. Certified installers are required to provide the GDF operator with the completed Equipment Warranty Notice, form 577013-868, for their records.

Product Marking Information

RELATED DOCUMENTS

Documents Required to Install Equipment

This intrinsically safe apparatus is only for use as part of a Veeder-Root Automatic Tank Gauging System (ATG Console with probes and sensors). To install intrinsically safe apparatus, use the specific control drawing that appears on the nameplate of the applicable associated apparatus (ATG Console):

Equipment	UL/cUL Control Drawing Document No.
Associated Apparatus	
TLS-450/8600	331940-008
TLS-350, TLS-350R	331940-011
Intrinsically Safe Apparatus for Wireless Applications	
Tank Gauge Accessories	331940-012

The control drawings contain information related to the correct installation of the overall intrinsically Safe System. This includes information such as maximum number of apparatus, specific apparatus allowed in the system, maximum cable lengths, references to codes, proper grounding and so on. Control drawings can be found on the accompanying Compact Disk (TECH DOCS CD) or on the internet at veeder.com under SUPPORT; VR TECHNICAL DOCUMENTS; DRAWINGS.

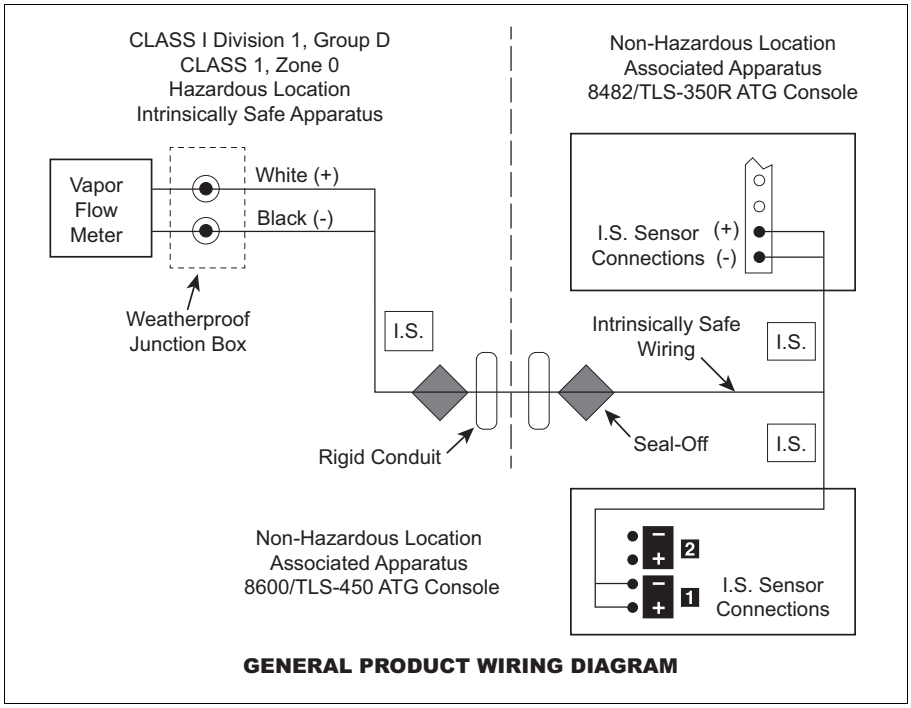

GENERAL PRODUCT WIRING DIAGRAM

Product Label Contents

VEEDER-ROOT™

I.S. CIRCUIT FOR HAZLOC SENSOR

F/N 331847-XXX

S/N XXXXXX

CL I, DIV. 1, GP.D
CL I, ZONE 0
AEx ia IIA
Ex ia IIA
TC=T4

-40°C ≤ Ta ≤ +60°C

MANUAL NO. 577013-796

SECURITE INTRINSEQUE

24G6 c UL US LISTED

Safety Warnings

To protect yourself and your equipment, observe the following warnings and important information:

⚠ WARNING

This product is to be installed in systems operating near locations where highly combustible fuels or vapors may be present.

FAILURE TO COMPLY WITH THE FOLLOWING WARNINGS AND SAFETY PRECAUTIONS COULD CAUSE DAMAGE TO PROPERTY, ENVIRONMENT, RESULTING IN SERIOUS INJURY OR DEATH.

1. **Read and follow all instructions in this manual, including all safety warnings to protect yourself and others from serious injury, explosion, or electrical shock.**
2. **Comply with all applicable codes including: the National Electrical Code; federal, state, and local codes; and other applicable safety codes.**
3. **To protect yourself and others from being struck by vehicles, block off your work area during installation or service.**
4. **Do not alter or modify any component or substitute components in this kit.**
5. **Warning! Substitution of components may impair intrinsic safety.**
6. **Field wiring to the Flow Meter must not share a conduit with any non-intrinsically safe device's wiring**
7. **Warning! To prevent ignition of flammable or combustible atmospheres, disconnect power before servicing.**
8. **Materials used in the construction of this device contain aluminum. Care must be taken to avoid ignition hazards due to impact or friction.**
9. **Before installing or taking the unit into a hazardous area, earth the unit in a safe area to remove any static charge. Then immediately transport the unit to the installation site. Do not rub or clean the unit prior to installation. Cleaning is not required under normal service conditions. Do not rub or clean the unit after installation. If the unit is not fixed to a known earth point when installed, ensure that a separate earth connection is made to prevent the potential of a static discharge. When fitting or removing the unit, use of anti-static footwear or clothing is required.**

NOTE ***Failure to install this product in accordance with its instructions and warnings will result in voiding of all warranties with this product.***

Safety Precautions

The following safety symbols may be used throughout this manual to alert you to important safety hazards and precautions.

	EXPLOSIVE Fuels and their vapors are extremely explosive if ignited.		**FLAMMABLE** Fuels and their vapors are extremely flammable.
	ELECTRICITY High voltage exists in, and is supplied to, the device. A potential shock hazard exists.		**TURN POWER OFF** Live power to a device creates a potential shock hazard. Turn Off power to the device and associated accessories when servicing the unit.
	READ ALL RELATED MANUALS Knowledge of all related procedures before you begin work is important. Read and understand all manuals thoroughly. If you do not understand a procedure, ask someone who does.		**USE SAFETY BARRICADES** Unauthorized people or vehicles in the work area are dangerous. Always use safety cones or barricades, safety tape, and your vehicle to block the work area.

Related Manuals

576013-879 TLS-3XX Series Consoles Site Prep Manual

577013-879 TLS-450 Series Consoles Site Prep Manual

577013-800 In-Station Diagnostics Install, Setup & Operation Manual

577013-964 TLS RF Wireless 2 System (W2) Installation and Maintenance Guide

Before You Begin

- A level 1 or higher certified Veeder-Root Technician must be available (on site) to assist in this type of installation.
- Comply with all recommended safety practices identified by OSHA (Occupational Safety and Health Administration) and your employer.
- Follow all installation requirements as per NFPA (National Fire Protection Association) 30, 30A, and 70.
- Review and comply with all the safety warnings in the installation manuals and any other national, State or Local requirements.
- When directly wiring to a TLS console, a 2-conductor, 18 AWG shielded cable must be installed in intrinsically safe conduit from each dispenser to the intrinsically safe wiring compartment of the TLS console.
- Debris from plumbing modifications should be flushed through the piping system prior to installing the ISD Vapor Flow Meter.
- Use only UL classified Gas/TFE yellow teflon tape on all fittings. Do not use pipe dope to seal pipe threads or fittings in and out of the ISD Vapor Flow Meter.

Veeder-Root Parts

- Veeder-Root ISD Vapor Flow Meter (P/N 331847-001).
- Sensor Installation Kit, see Table 1.

Table 1.- Vapor Flow Meter Installation Kit (P/N 330020-445)

Item	Qty.	Description	P/N
1	1	ISD Vapor Flow Meter	331847-002
2	2	Flange with 1” NPT threaded hole	332091-001
3	4	5/16-18 UNC-2B x 3/4” hex head bolt	514100-426
4	2	1-11.5 NPT x 2 “ male to male threaded steel nipple	576008-655
5	1	Inlet filter	332092-001
6	1	Outlet o-ring (Parker size # 2-218, Nitrile)	512700-258
7	1	Cord grip group	331028-001
8	1	Sealing pack	514100-304
9	2	Wire nut	576008-461
10	2	Tie wrap	510901-337
11	4	5/16” Lock washer	514100-436

Tools Required

1. Pipe wrench suitable for tightening 1-inch NPT pipe.
2. 1/2’’ socket wrench to install Vapor Flow Meter flange bolts.
3. Necessary pipe fitter’s equipment and a non-hazardous work space suitable to modify dispenser vapor line for Vapor Flow Meter installation, when necessary.

Installation Steps - Vacuum Assist System Above Shear Valve

1. Before installing this device, turn Off, tag/lock out power to the system, including console and submersible pumps.
2. Remove the dispenser's lower sheet metal doors to access the vapor plumbing.
3. Loosen any factory installed mounts and/or brackets necessary to provide room to disconnect the vacuum motor outlet plumbing.
4. Disconnect the factory installed plumbing between the outlet of the vacuum motors and the field installed plumbing above the vapor shear valve, if present (see example installation in Figure 1). Retain the manufacturers installed piping for later use.
5. Remove any unneeded field installed plumbing above the vapor shear valve. The Vapor Flow Meter with flanges attached can be used for sizing the required head space of approximately 8 inches. Approximately 3 inches of clearance is required on both sides of the piping to accommodate the width of the meter body.
6. Working through the vacuum motor mounting plate, if present, connect the upper flange to factory installed plumbing. Note that this may need to be temporarily suspended across the vacuum motor mounting plate while the lower plumbing work progresses.
7. Install any plumbing and the lower flange that will connect between the outlet side of the Vapor Flow Meter and the shear valve or lower vapor return line. Note: Elbows should be kept to a minimum (straight vertical plumbing is preferable). To improve efficiency and to reduce the risk of liquid traps, all horizontal plumbing must be pitched to drain.
8. Clean all debris around the inlet and outlet plumbing prior to installing the Vapor Flow Meter. Do not blow compressed air through the Vapor Flow Meter to prevent damaging the internal screens.
9. Install the o-ring into the lower mounting flange.
10. Taking care that foreign material (chips, debris, sealant, etc.) does not enter the open piping or Vapor Flow Meter, carefully insert the inlet filter and then connect the Vapor Flow Meter to the upper flange. Note that the flow arrow on the side of the meter body must point down.
11. Connect the lower flange to the Vapor Flow Meter.
12. Tighten any loose fittings and hardware
13. Route the wiring to the TLS RF transmitter (W2) or into the junction box via the supplied cord grip assembly when direct wiring to a TLS console.
14. Connect the wires from the Vapor Flow Meter to the field wiring from the console and cap with wire nuts (see Figure 2). Not required when connecting to the TLS RF transmitter (W2).
15. After all other ISD Vapor Flow Meters and the ISD Pressure Sensor are installed, pressurize the tank ullage space and vapor piping to at least 2 inches WC and test for leaks using leak detection solution.

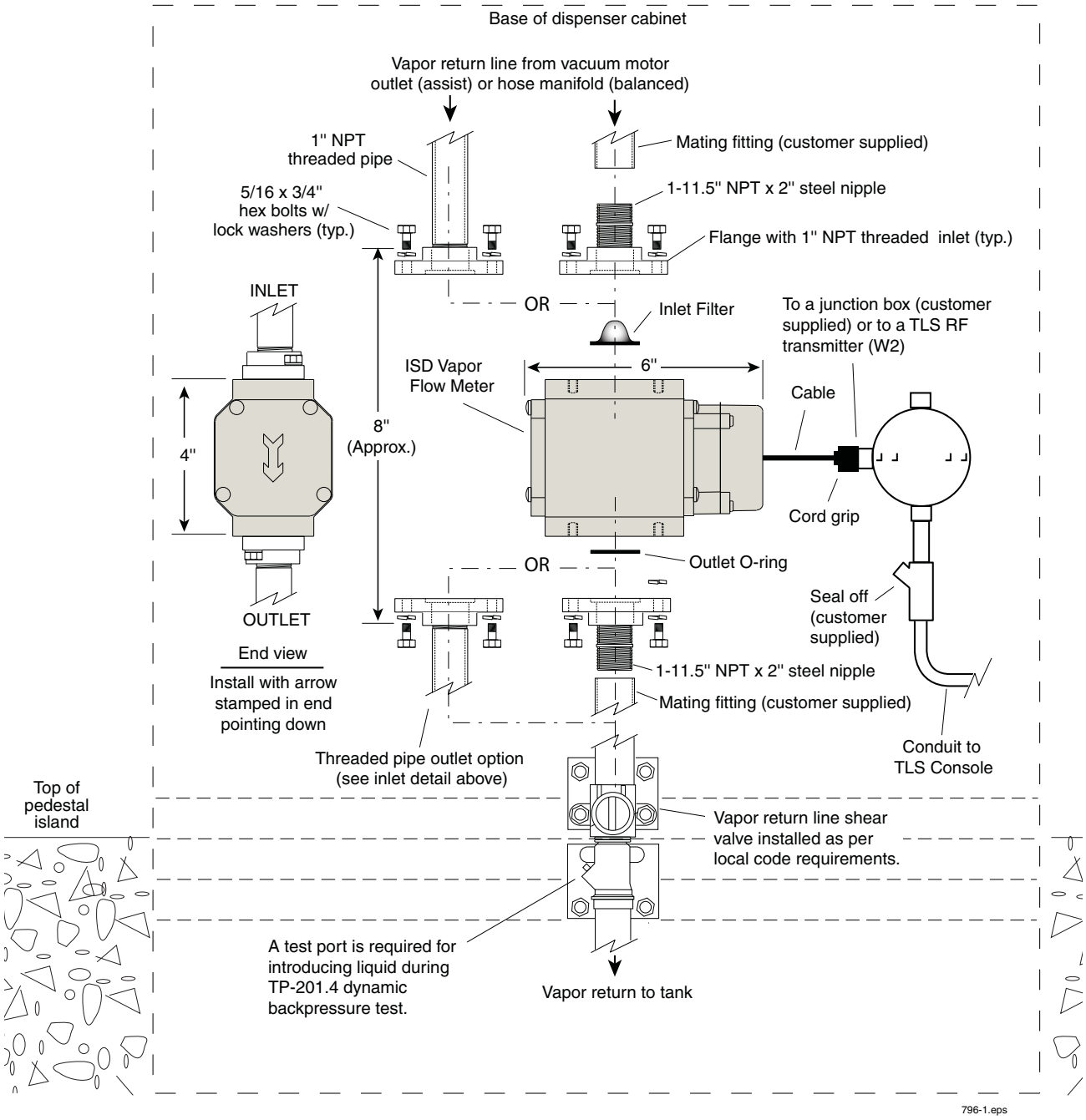

Figure 1. Example Vapor Flow Meter Installation Above Shear Valve

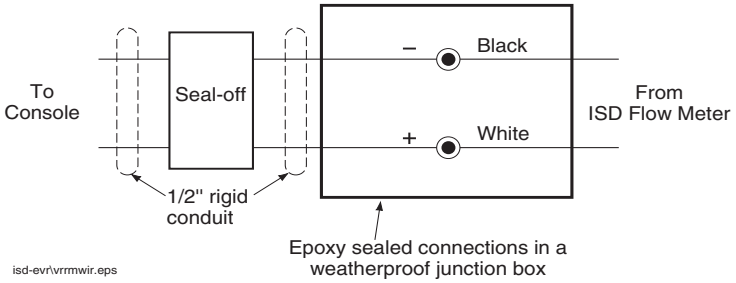

Figure 2. Field wiring Vapor Flow Meter - Observe Polarity

Installation Steps - Vacuum Assist System Below Shear Valve

NOTE: The Vapor Flow Meter should be installed prior to setting the dispenser in place or prior to installing any vacuum assist retrofit kits. If retrofitting the vacuum assist system, follow all manufacturer's instructions.

1. Before installing this device, turn Off, tag/lock out power to the system, including console and submersible pumps.
2. Remove the dispenser's lower sheet metal doors to access the vapor plumbing, if necessary.
3. If a retrofit vacuum assist kit will be installed, remove any hardware specified in the manufacturer's installation instructions. Do not install the retrofit assembly at this time.
4. Remove any unneeded field installed plumbing between the vapor shear valve and the vapor return line fitting. Figure 3 shows two example installations of the Vapor Flow Meter with the required lateral or wye fitting for running the TP-201.4 back pressure test. Approximately 3 inches of clearance is required on both sides of the piping to accommodate the width of the meter body.
5. Connect the lower flange to the pipe that is connected to the lateral or wye access fitting (see Figure 4).
6. Install the Vapor Flow Meter over the lower flange.
7. Connect the upper flange with serviceable screen above the Vapor Flow Meter.
8. Using a close nipple, thread the shear valve into the upper flange.
9. Install the vacuum assist retrofit kit, if required, following the retrofit kit manufacturer's installation instructions - or fit the dispenser to its permanent mounting points.
10. Using nipples, unions, and other plumbing as required, connect the vacuum assist outlet to the shear valve.
11. Route the wiring into the junction box via the supplied cord grip assembly. Connect the wires from the Vapor Flow Meter to the field wiring from the console and cap with wire nuts (see Figure 2) - OR - connect the wires to the TLS RF transmitter (W2).
12. After all other ISD Vapor Flow Meters and the ISD Pressure Sensor are installed, pressurize the tank ullage space and vapor piping to at least 2 inches WC and test for leaks using leak detection solution.

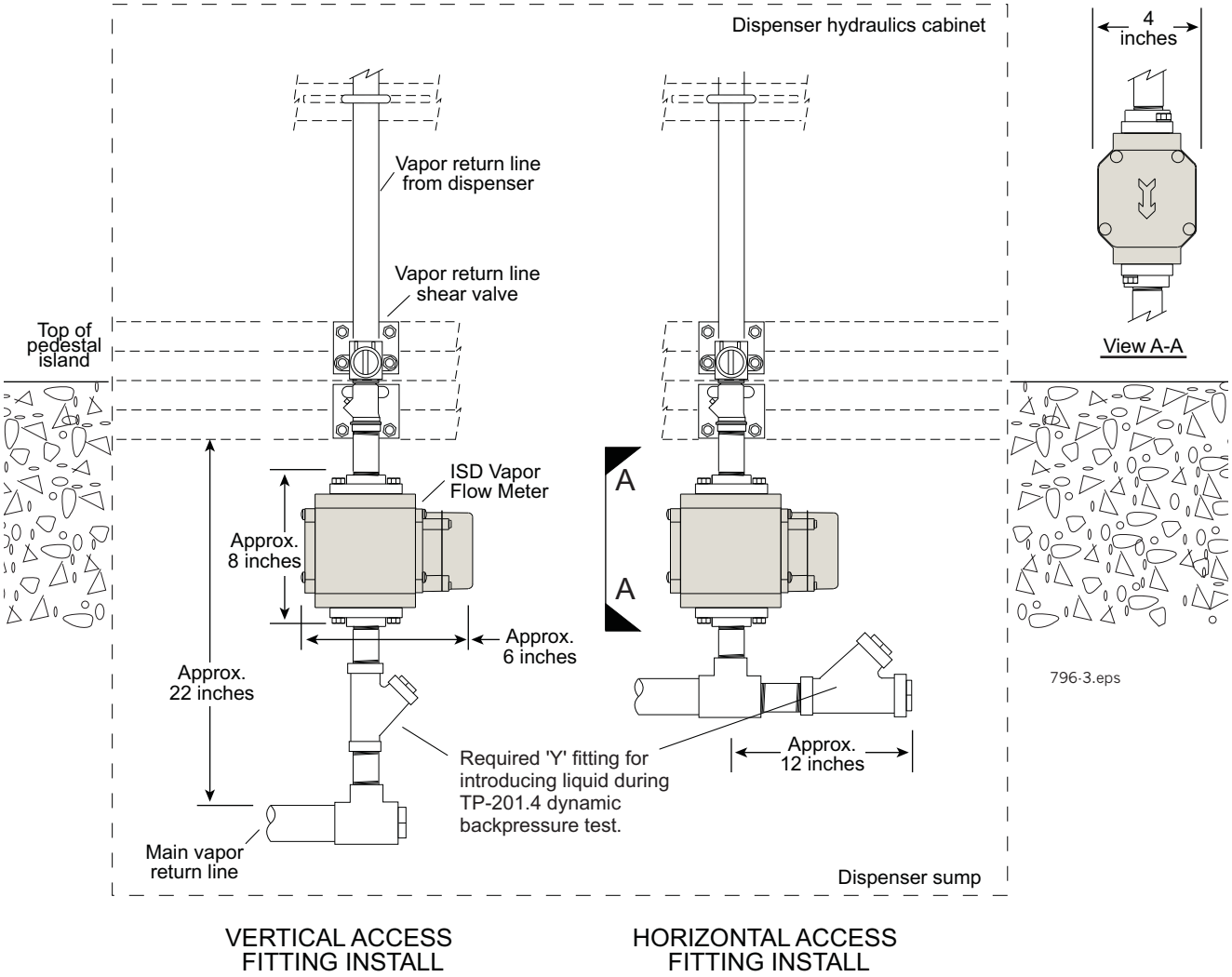

Figure 3. Example flow meter installations with approximate clearances

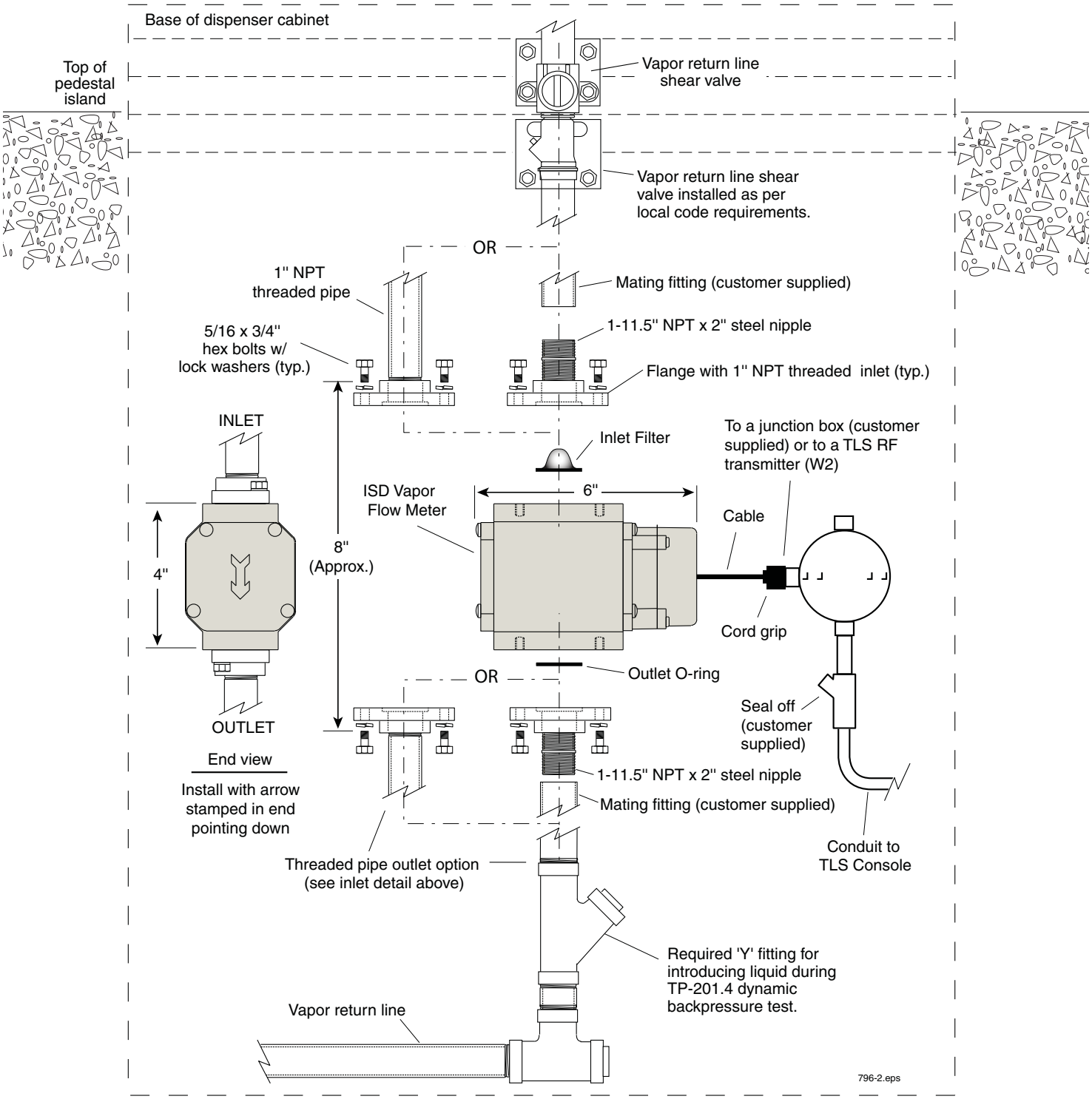

Figure 4. Example Vapor Flow Meter Installation Below Shear Valve

Seal and Connect Field Wiring

1. Seal wire nuts with epoxy sealant following the instructions in Figure 5. Note - wire sealing is not required for installations using a wireless interface.

   CAUTION: Epoxy sealant is irritating to eyes, respiratory system, and skin. Can cause allergic skin reaction. Contains: epoxy resin and Cycloaliphatic epoxycarboxylate. Precautions: Wear suitable protective clothing, gloves, eye, and face protection. Use only in well ventilated areas. Wash thoroughly before eating, drinking, or smoking.

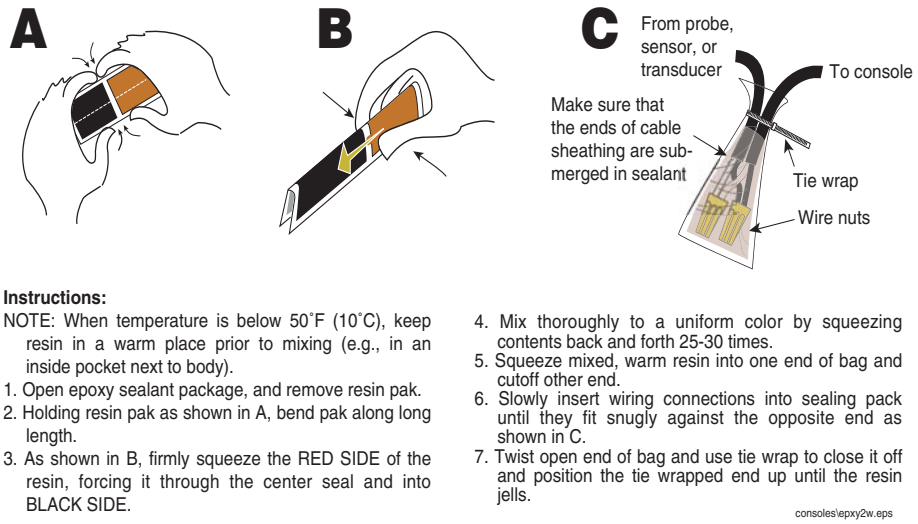

Figure 5. Epoxy sealing field wiring

2. Push the epoxy sealed bag into the junction box. Replace and tighten the junction box cover.
3. Terminate field wiring into TLS-350 Consoles and connect to Smart Sensor Module located in the intrinsically safe wiring compartment as shown in Figure 6. Terminate field wiring into TLS-450 Consoles and connect to USM Module located in the module bay of the console as shown in Figure 7. Note: you must observe polarity! Also, the cable length between the console and sensor must not exceed the distance stated in the appropriate console's Site Prep manual. For the wireless version, terminate the wires in the TLS RF transmitter (W2).

   Note: Intrinsically safe devices must be installed in accordance with Article 504 of the National Electrical Code, ANSI/NFPA 70, for installation in the United States, or Section 18 of the Canadian Electrical Code for installations in Canada.
4. Replace the lower sheet metal doors in the dispenser.

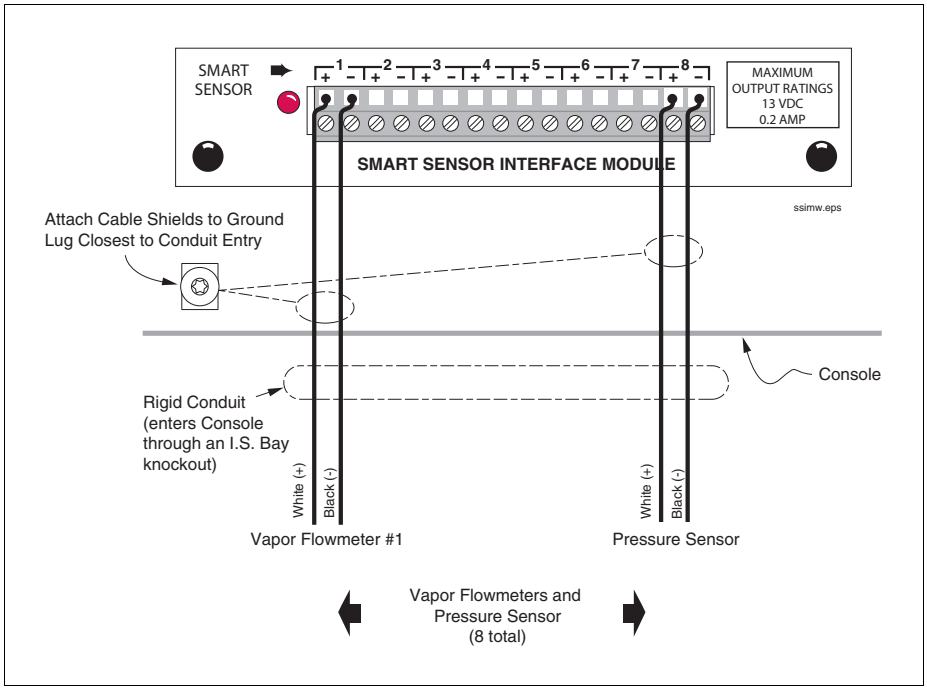

Figure 6. Connecting Vapor Flow Meter to TLS-350 Smart Sensor Interface Module

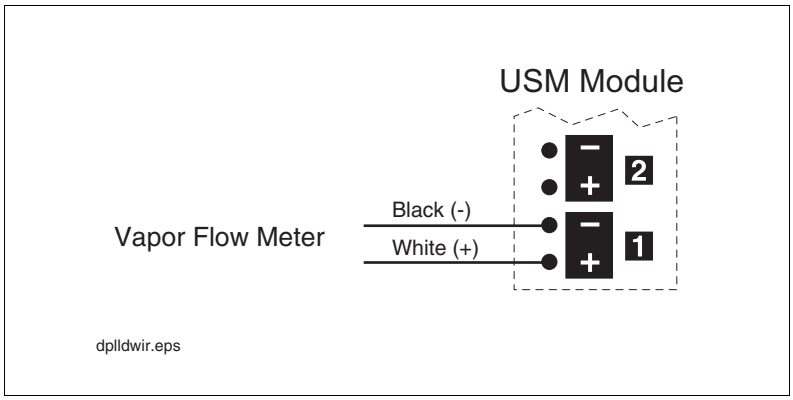

Figure 7. Connecting Vapor Flow Meter to TLS-450 USM Module

NOTE! For wireless configurations, see TLS RF System Control Drawing 331940-012.

VEEDER-ROOT

For technical support, sales or other assistance, please visit: www.veeder.com

Pressure Sensor

Installation Guide

VEEDER-ROOT

Notice

Veeder-Root makes no warranty of any kind with regard to this publication, including, but not limited to, the implied warranties of merchantability and fitness for a particular purpose.

Veeder-Root shall not be liable for errors contained herein or for incidental or consequential damages in connection with the furnishing, performance, or use of this publication.

Veeder-Root reserves the right to change system options or features, or the information contained in this publication as approved by ARB.

This publication contains proprietary information which is protected by copyright. All rights reserved. No part of this publication may be modified or translated to another language without the prior written consent of Veeder-Root. Contact TLS Systems Technical Support for additional troubleshooting information at 800-323-1799.

DAMAGE CLAIMS / LOST EQUIPMENT

Thoroughly examine all components and units as soon as they are received. If any cartons are damaged or missing, write a complete and detailed description of the damage or shortage on the face of the freight bill. The carrier's agent must verify the inspection and sign the description. Refuse only the damaged product, not the entire shipment.

Veeder-Root must be notified of any damages and/or shortages within 30 days of receipt of the shipment, as stated in our Terms and Conditions.

VEEDER-ROOT'S PREFERRED CARRIER

1. Contact Veeder-Root Customer Service at 800-873-3313 with the specific part numbers and quantities that were missing or received damaged.
2. Fax signed Bill of Lading (BOL) to Veeder-Root Customer Service at 800-234-5350.
3. Veeder-Root will file the claim with the carrier and replace the damaged/missing product at no charge to the customer. Customer Service will work with production facility to have the replacement product shipped as soon as possible.

CUSTOMER'S PREFERRED CARRIER

1. It is the customer's responsibility to file a claim with their carrier.
2. Customer may submit a replacement purchase order. Customer is responsible for all charges and freight associated with replacement order. Customer Service will work with production facility to have the replacement product shipped as soon as possible.
3. If "lost" equipment is delivered at a later date and is not needed, Veeder-Root will allow a Return to Stock without a restocking fee.
4. Veeder-Root will NOT be responsible for any compensation when a customer chooses their own carrier.

RETURN SHIPPING

For the parts return procedure, please follow the appropriate instructions in the "General Returned Goods Policy" pages in the "Policies and Literature" section of the Veeder-Root **North American Environmental Products** price list. Veeder-Root will not accept any return product without a Return Goods Authorization (RGA) number clearly printed on the outside of the package.

INSTALLATION IN THE STATE OF CALIFORNIA

Please refer to the California Air Resources Board Vapor Recover Certification Phase II EVR Executive Order web site (www.arb.ca.gov/vapor/eo-evrphaseII.htm) for the latest manual revisions pertaining to VR 204 (VST Phase II EVR System Including ISD System).

©Veeder-Root 2013. All rights reserved.

Pressure Sensor Installation

Contractor Certification Requirements 1
Related Documents 1
Safety Precautions 2
Before You Begin 3
Veeder-Root Parts 3
Tools Required 5
Under Dispenser Installation Steps 5
Vapor Vent Stack Installation Step 13

Figures

Figure 1. Table 2 Component Pictorial 5
Figure 2. Example Pressure Sensor Install In Shear Valve Port - Preferred Non-ISD Installation (Without Vapor Flow Meter) 7
Figure 3. Example Pressure Sensor Install In Vapor Return Line - Non-ISD Installation (Without Vapor Flow Meter) 8
Figure 4. Example Pressure Sensor Install In Shear Valve Port - Preferred ISD Installation 9
Figure 5. Example Pressure Sensor Install In Horizontal Access Fitting Or Vapor Return Line - ISD Installation (With Vapor Flow Meter Below Shear Valve) 10
Figure 6. Example Pressure Sensor Install Below Vertical Access Fitting Or Vapor Return Line - ISD Installation (With Vapor Flow Meter Below Shear Valve) 11
Figure 7. Field wiring Pressure Sensor - Observe Polarity 12
Figure 8. Epoxy sealing field wiring 12
Figure 9. Connecting Pressure Sensor to TLS-3XX Smart Sensor Interface Module 13
Figure 10. Locating Pressure Sensor Enclosure in Vapor Vent Stack 15
Figure 11. Mounting Pressure Sensor Assembly onto Composite Panel 16

Tables

Table 1. Under Dispenser - Pressure Sensor Installation Kit (P/N 330020-515) 3
Table 2. Vapor Vent Stack - Pressure Sensor Installation Kit (P/N 330020-630) 4

Pressure Sensor Installation

This manual contains instructions to install a Veeder-Root (In-Station Diagnostic) Pressure Sensor in a dispenser's vapor return line or in a vapor vent stack.

This manual assumes all preliminary site preparation is completed, and that wiring from the console to the Pressure Sensor junction box is in place and meets the requirements set out in the console's Site Prep manual.

Contractor Certification Requirements

Veeder-Root Contractor Certification Requirements	Installer Certification[6]	ATG Technician Certification[7]	VR Vapor Products Certification[8]
Install[1] ISD	X	X	X
Install PMC	X	X	X
Install CCVP	X	X	X
Install Wireless ISD/PMC	X	X	X
Installation Checkout[2]		X	X
ATG Startup[3] / Training[4] / Service[5]		X	X
ISD Startup / Training / Service			X
PMC Startup / Training / Service			X
CCVP Startup / Training / Service			X
Wireless ISD/PMC Startup / Training / Service			X
Install Pressure Sensor (ATG)	X	X	X
Maintain Pressure Sensor (ATG)		X	X
Calibrate Pressure Sensor (ATG)		X	X
Clear ATG Pressure Sensor Alarm (ATG)		X	X
Clear ISD/PMC Alarms (ISD/PMC)			X

[1]Perform wiring and conduit touting; equipment mounting
[2]Inspect wiring and conduit routing; equipment mounting
[3]Turn power on, program and test the systems
[4]Provide supervised field experience in service techniques and operations
[5]Troubleshoot and provide routing maintenance
[6]UST Monitoring Systems – Installer (Level 1)
[7]Certified UST Monitoring Technician
[8]VR Vapor Products

Warranty Registrations may only be submitted by selected Distributors. Certified installers are required to provide the GDF operator with the completed Equipment Warranty Notice, form 577013-868, for their records.

Related Documents

576013-879 TLS-3XX Series Consoles Site Prep and Installation Manual

577013-800 ISD Setup and Operation Manual

577013-801 PMC Setup and Operation Manual

577013-937 In-Station Diagnostics (ISD) Install, Setup, & Operation Manual

331940-012 TLS-RF System Control Drawing

577013-964 TLS RF Wireless 2 System (W2) Installation and Maintenance Guide

Safety Precautions

The following safety symbols may be used throughout this manual to alert you to important safety hazards and precautions.

	EXPLOSIVE Fuels and their vapors are extremely explosive if ignited.		**FLAMMABLE** Fuels and their vapors are extremely flammable.
	ELECTRICITY High voltage exists in, and is supplied to, the device. A potential shock hazard exists.		**TURN POWER OFF** Live power to a device creates a potential shock hazard. Turn Off power to the device and associated accessories when servicing the unit.
	WARNING Heed the adjacent instructions to avoid damage to equipment, property, environment or personal injury.		**USE SAFETY BARRICADES** Unauthorized people or vehicles in the work area are dangerous. Always use safety cones or barricades, safety tape, and your vehicle to block the work area.
	READ ALL RELATED MANUALS Knowledge of all related procedures before you begin work is important. Read and understand all manuals thoroughly. If you do not understand a procedure, ask someone who does.		

⚠ WARNING

This product is to be installed and operated in the highly combustible environment of a gasoline dispenser where flammable liquids and explosive vapors may be present.

FAILURE TO COMPLY WITH THE FOLLOWING WARNINGS AND SAFETY PRECAUTIONS COULD CAUSE DAMAGE TO PROPERTY, ENVIRONMENT, RESULTING IN SERIOUS INJURY OR DEATH.

The following hazards exist:

1. **Electrical shock resulting in serious injury or death may result if power is on during installation and the device is improperly installed.**
2. **Product leakage could cause severe environmental damage or explosion resulting in death, serious personal injury, property loss and equipment damage.**

Observe the following precautions:

1. **Read and follow all instructions in this manual, including all safety warnings.**
2. **To be installed in accordance with the National Electrical Code (NFPA 70) and the Code for Motor Fuel Dispensing Facilities and Repair Garages (NFPA 30A).**
3. **Before installing this device, turn Off, tag/lock out power to the system, including console and submersible pumps.**
4. **To protect yourself and others from being struck by vehicles, block off your work area during installation or service.**
5. **Substitution of components may impair intrinsic safety.**

Before You Begin

- Comply with all recommended safety practices identified by OSHA (Occupational Safety and Health Administration) and your employer.
- Review and comply with all the safety warnings in the installation manuals and any other national, State or Local requirements.
- When direct wiring to a TLS console, a 2-conductor, 18 AWG shielded cable must be installed in intrinsically safe conduit from the dispenser or from the vapor vent stack to the TLS console.
- The Pressure Sensor must be installed in a VERTICAL position with the sensing port pointing down. Its connection in the base of the dispenser to the vapor return line must be made BELOW the vapor return line shear valve mechanism, AND BELOW the Vapor Flow Meter outlet (if a flow meter is installed).
- For all connections requiring sealant, use only UL classified yellow Gas/TFE Teflon tape.
- When installing on a vent stack, customer supplied pipe and pipe fittings shall be standard full-weight (ASTM Schedule 40) wrought iron or steel.
- Customer supplied copper tubing shall be soft tempered, 1/4-inch O.D., with a minimum wall thickness of 0.0265 inches.
- Pipe threads shall be in accordance with the Standard for Pipe Threads, General Purpose (Inch) ANSI/ASME B1.20.1-1983.

Veeder-Root Parts

Veeder-Root parts and kits required to install the Pressure Sensor are listed in Table 1 and Table 2.

Table 1. Under Dispenser - Pressure Sensor Installation Kit (P/N 330020-515)

Item	Qty.	Description	P/N
1	1	Pressure sensor	331946-001
2	4	Male connector 68CA-4-4, brass 1/4” tube to 1/4” pipe	514100-430
3	1	Union 62CA-4, brass 1/4” tube size	514100-431
4	1	Plug 59CA-4, brass 1/4” tube size	514100-432
5	1	Universal sensor mounting kit - miscellaneous assortment of U-bolts, brackets, clamps, and fasteners	330020-012
6	2	Wire nut	576008-461
7	1	Sealing pack	514100-304
8	1	Cord grip	331028-011
9	2	Tie wrap	510901-337
10	1	Shim	332061-001
11	1	Ball Valve, 3-way, 1/4”	576008-649
12	1	Copper tube, soft, 1/4” OD, 36” length	332151-001

Table 2. Vapor Vent Stack - Pressure Sensor Installation Kit (P/N 330020-630)

Item	Qty.	Description	P/N
1	1	Pressure sensor	331946-001
2	1	Enclosure, NEMA 4X- modified	333004-001
3	1	Panel, composite, modified	333005-001
4	2	Male elbow 169CA-4-4, brass 1/4" tube to 1/4" pipe	579066-001
5	2	Male connector 68CA-4-4, brass 1/4" tube to 1/4" pipe	514100-430
6	1	Plug 59CA-4, brass 1/4" tube size	514100-432
7	1	Bulkhead union 62CABH-4, brass 1/4" tube size	514100-476
8	2	Washer, 0.469 x 1.125 x 0.063”, zinc	510904-573
9	1	Tube - copper, 1/4” OD, short S bend	333006-001
10	1	Tube - copper, 1/4” OD x 8” length	333018-001
11	1	Ball valve, 3-way, 1/4”	576008-649
12	1	Hub, conduit, liquid tight, 1/2”, zinc	576010-715
13	3	Conduit clamp, 2”, steel - std duty	514100-478
14	3	1/4-20 x 0 .75” hex bolt - steel	026-620-1
15	3	Washer, flat, 1/4”, zinc	514100-374
16	3	1/4-20, hex nut w/lock washer	511000-251
17	1	Vent, porous, flanged, 0.17 x 0.42”	514100-477
18	2	Wire nut	576008-461
19	1	Sealing pack	514100-304
20	1	Cord grip	331028-011
21	2	Tie wrap	510901-337
22	1	Shim	332061-001
23	1	Manual, Installation VR Pressure Sensor	577013-797
24	1	Manual, ISD Setup & Operation	577013-800
25	1	Manual, PMC Setup & Operation	577013-801
26	1	ISD Quick Reference Guide	577013-842
27	1	Warranty card, ISD system	577013-868
28	1	Manual, ISD Setup & Operation, VST	577013-937
29	2	Conduit clamp, 3”, steel, std duty	514100-482
30	1	Label - eVRgreen	333041-001

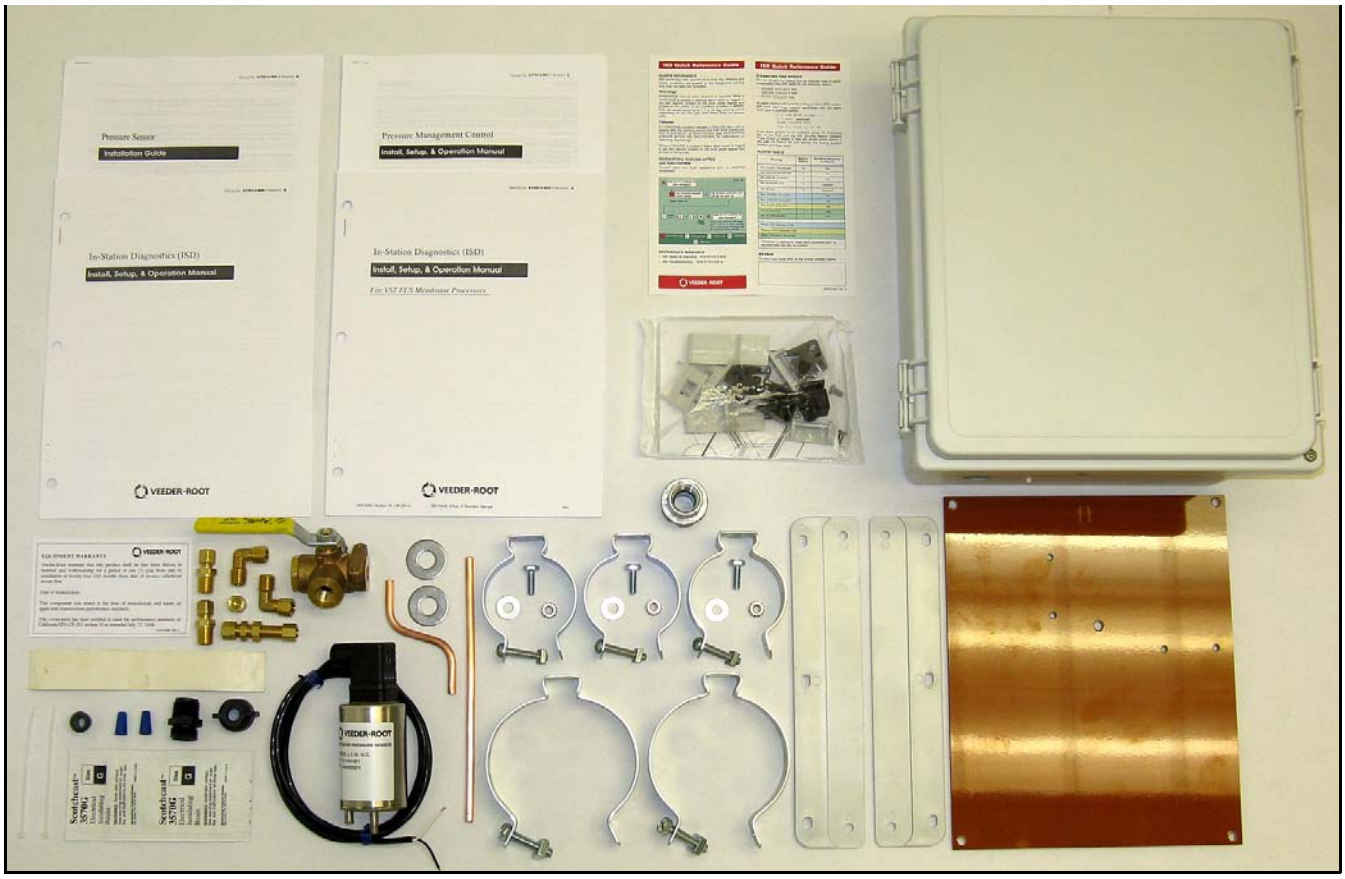

Figure 1. Table 2 Component Pictorial

Tools Required

1. Wrenches suitable for tightening tubing/pipe fittings.
2. Necessary pipe fitter's equipment (including threading equipment as needed) and a non-hazardous work space suitable to modify the dispenser vapor line or the vapor vent stack for Pressure Sensor installation.
3. Torx bit for tamper-resistant screws (VR P/N 330020-635).

   NOTE: this bit is required to open and close the enclosure door.

Under Dispenser Installation Steps

1. Before installing this device, turn Off, tag/lock out power to the system, including console and submersible pumps.
2. Determine which dispenser is closest to the tank being monitored. Remove that dispenser's lower sheet metal doors to gain access to the vapor plumbing.
3. Refer to Pressure Sensor dispenser installation examples in Figure 2 through Figure 6 to locate a suitable port or plumb a suitable fitting for the Pressure Sensor tubing in either the vapor return shear valve or in the

vapor return line. **NOTE: In ISD installations, the pressure port used must be below the vapor flow meter outlet.**

4. Install one of the 68CA-4-4 male connectors (item 2 in Table 1) from the kit into the tapped hole.
5. Install Pressure Sensor (item 1 in Table 1) vertically to the dispenser frame or piping using the 2-inch conduit clamp, rubber shim, and necessary bolts, nuts, and washers from the included Universal Sensor Mounting kit. Wrap the rubber shim (item 10 in Table 1) around the sensor before inserting it into the clamp. Also make sure the sensor cable outlet is facing up and the pressure sensing port tube in the base of the sensor is facing down.
6. Attach one end of the 62CA-4 union (item 3 in Table 1) to the pressure sensing port in the base of the Pressure Sensor.
7. Install the remaining 68CA-4-4 male connectors (item 2 in Table 1) from the kit into each of the three ports in the 3-way calibration valve (item 13 in Table 1).
8. Measure, fabricate, and install a ¼" OD copper tube (item 12 in Table 1) that runs between the 62CA-4 union in the base of the sensor and the center port of the 3-way calibration valve.
9. Measure, fabricate, and install a ¼" OD copper tube that runs between the ¼" tube end of the male connector fitting installed beneath the shear valve mechanism and the right port on the 3-way valve, being careful not to create any potential liquid traps (Note 3-way valve orientation in Figure 6).
10. Screw the 59CA-4 plug, item 4, from the kit onto the left port's male connector. Make sure the valve's handle is set to connect the sensor to the vapor return line and not to the capped (ambient) port.

Important! All plumbing's pitch to drain should be 1/4" vertical per 12" horizontal to eliminate liquid traps.

11. Route the cable from Pressure Sensor to the Pressure Sensor junction box in the dispenser. Observing polarity, connect the sensor wiring to the field wiring from console and cap with wire nuts (see Figure 7) - OR - terminate the wiring in the TLS RF transmitter (W2). In wireless installations, the wiring is not sealed and does not run back to the TLS console and Steps 12, 13 and 14 ARE NOT REQUIRED.
12. Seal wire nuts in epoxy sealant following the instructions in Figure 8.
13. Push the epoxy sealed bag into the junction box. Replace and tighten the junction box cover.
14. Terminate field wiring into TLS Console and connect to Smart Sensor Module (TLS-3XX - Figure 9). Note: observe polarity! The cable length between the console and sensor must not exceed the distance stated in the TLS-3XX Site Prep manual (P/N 576013-879).

    Note: Intrinsically safe devices must be installed in accordance with Article 504 of the National Electrical Code, ANSI/NFPA 70, for installation in the United States, or Section 18 of the Canadian Electrical Code for installations in Canada.

    This intrinsically safe Pressure Sensor P/N 331946-001, has only been evaluated for connection to a UL listed TLS-3XX Liquid Level Gauge / Leak Detector.

    Conductors of different intrinsically safe circuits run in the same cable/conduit must have at least 0.01 inch (0.25 mm) of insulation.

15. After the Pressure Sensor is installed, pressurize the tank ullage space and vapor piping to at least 2 inches WC and test for leaks using leak detection solution.
16. Replace lower dispenser sheet metal doors onto dispensers.

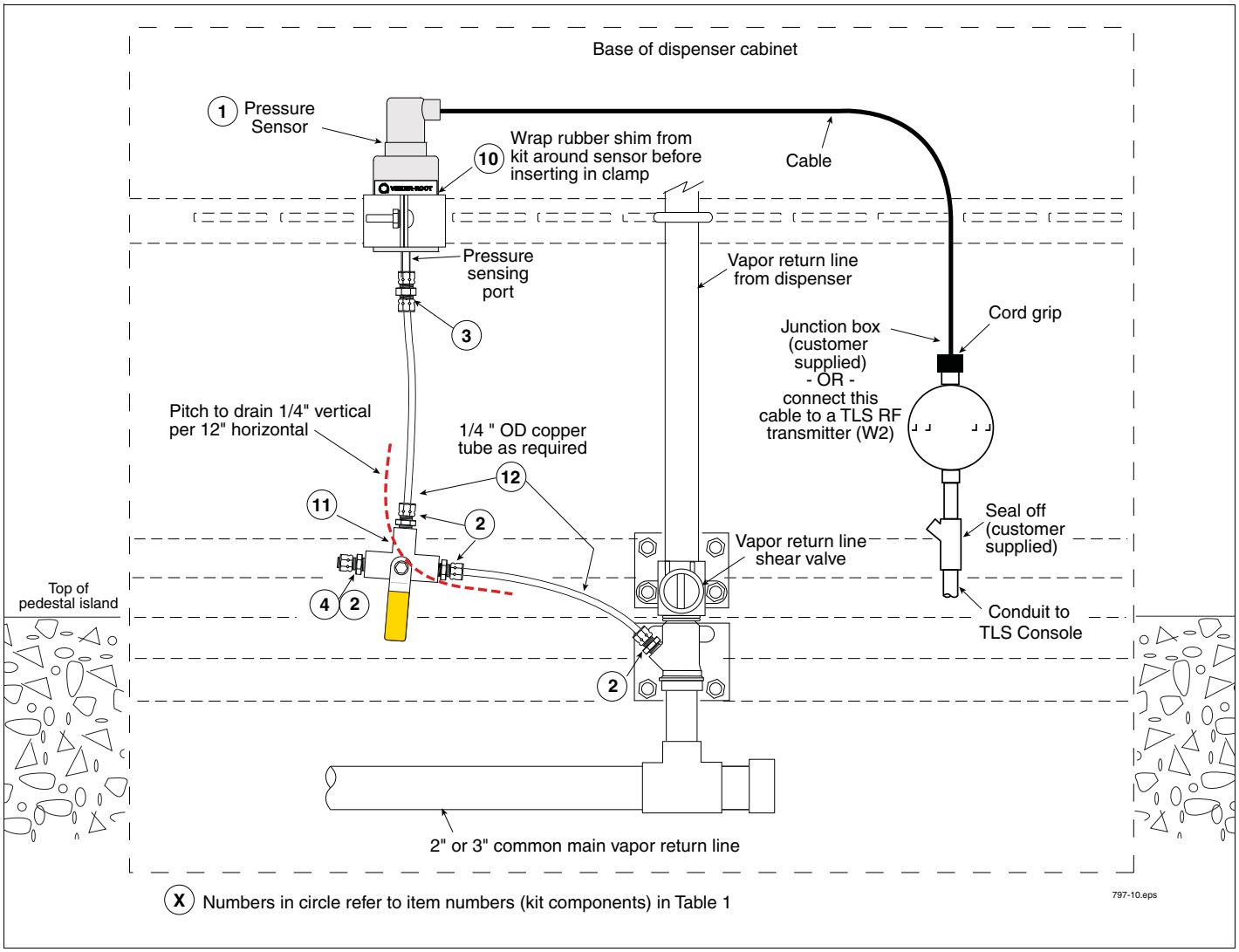

Figure 2. Example Pressure Sensor Install In Shear Valve Port - Preferred Non-ISD Installation (Without Vapor Flow Meter)

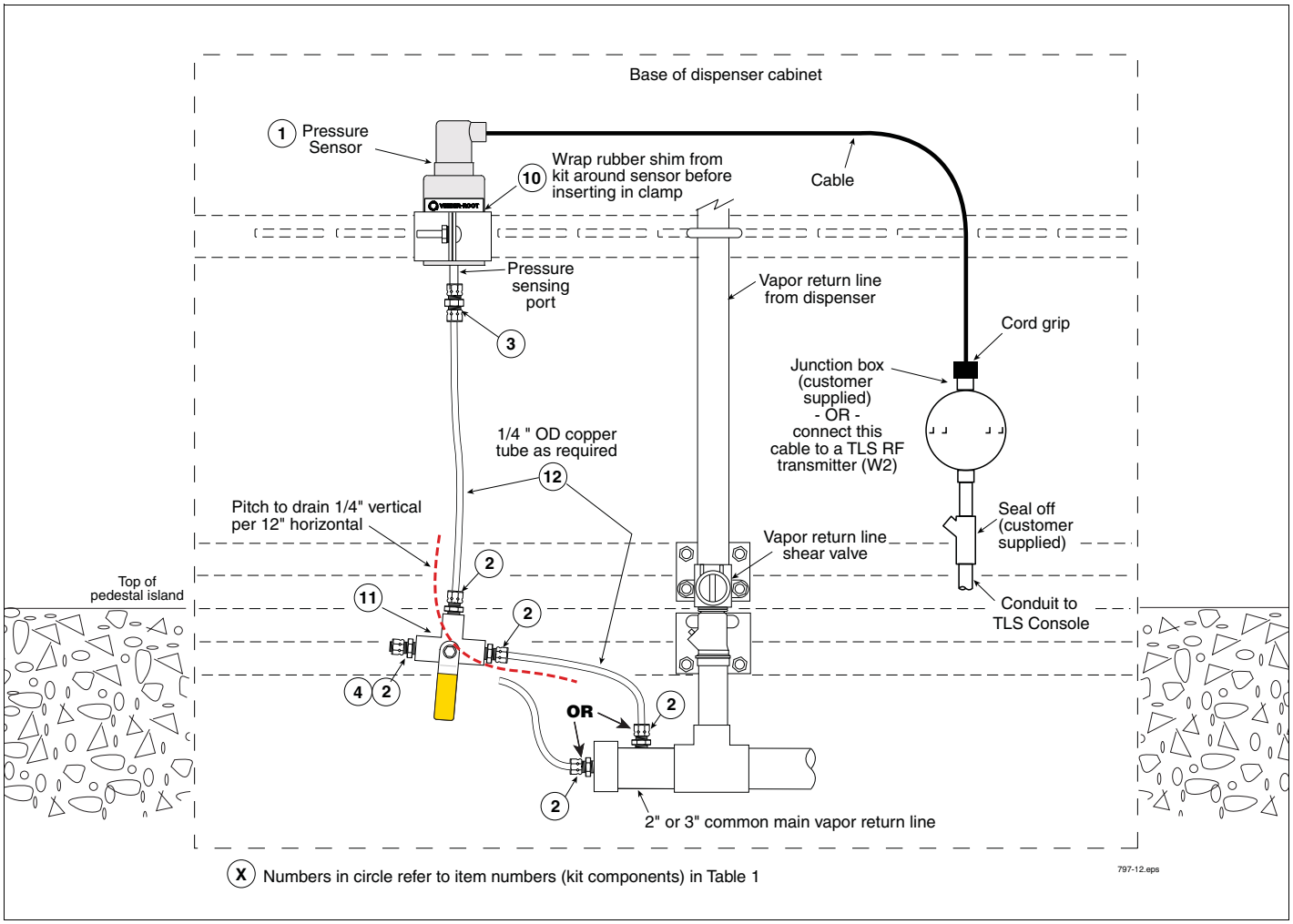

Figure 3. Example Pressure Sensor Install In Vapor Return Line - Non-ISD Installation (Without Vapor Flow Meter)

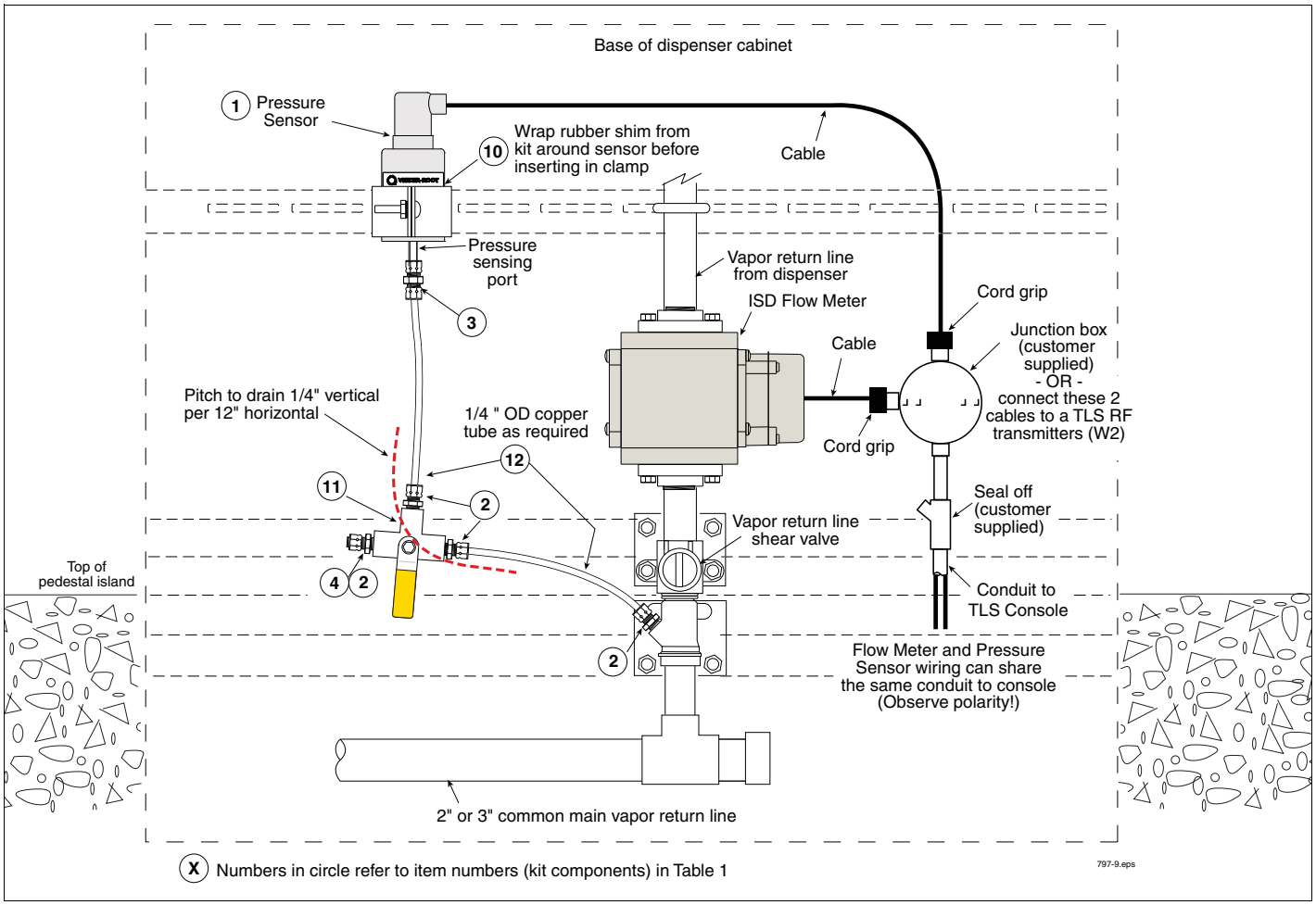

Figure 4. Example Pressure Sensor Install In Shear Valve Port - Preferred ISD Installation (With Vapor Flow Meter Above Shear Valve)

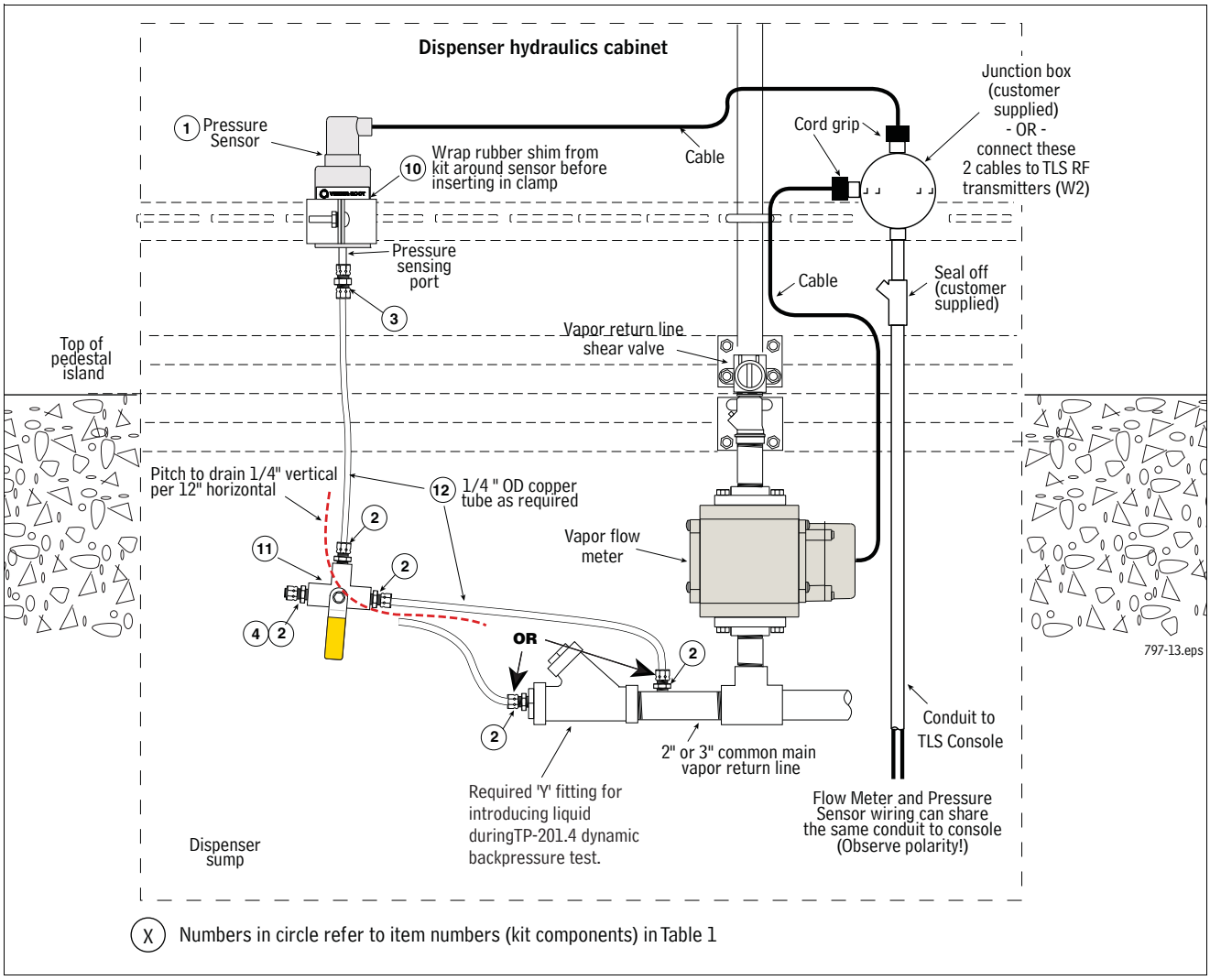

Figure 5. Example Pressure Sensor Install In Horizontal Access Fitting Or Vapor Return Line - ISD Installation (With Vapor Flow Meter Below Shear Valve)

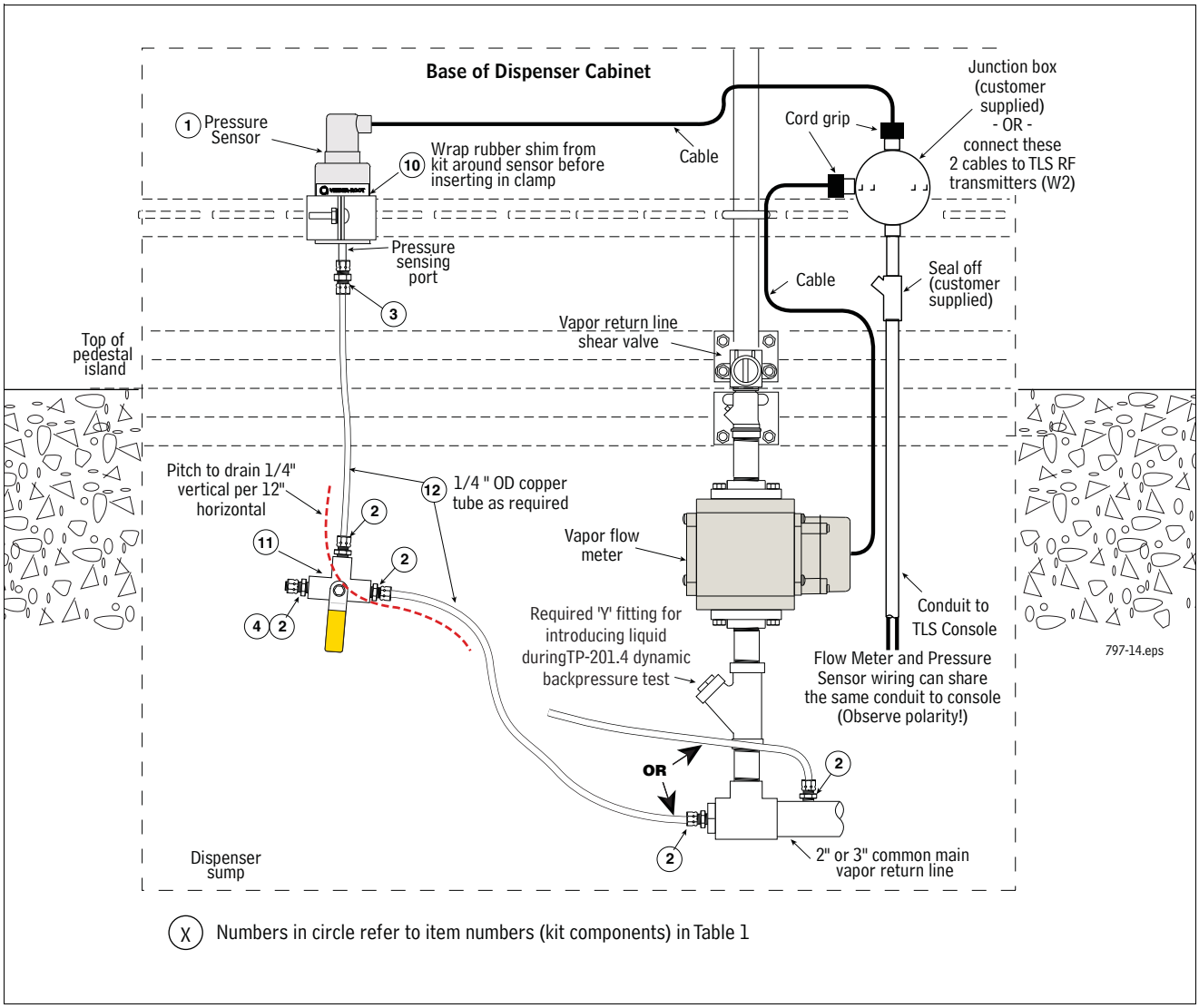

Figure 6. Example Pressure Sensor Install Below Vertical Access Fitting Or Vapor Return Line - ISD Installation (With Vapor Flow Meter Below Shear Valve)

.

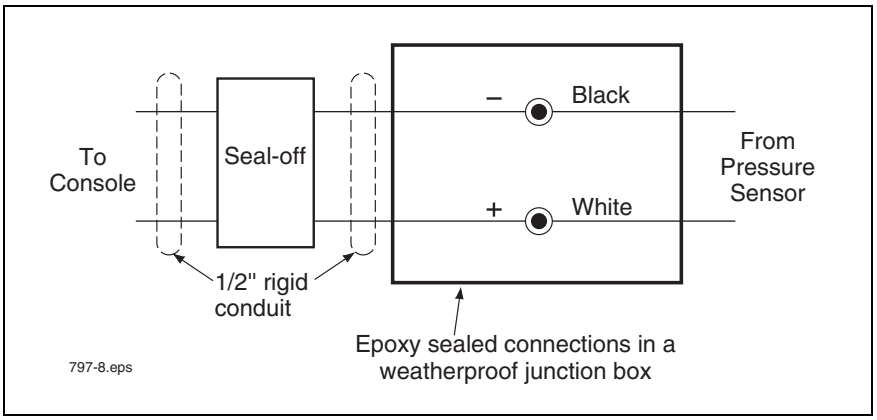

Figure 7. Field wiring Pressure Sensor - Observe Polarity

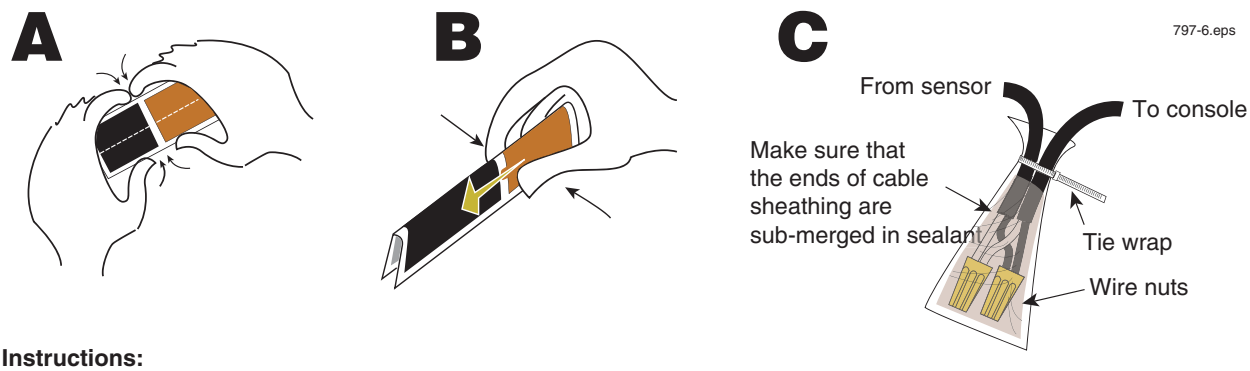

Instructions:

NOTE: When temperature is below 50°F (10°C), keep resin in a warm place prior to mixing (e.g., in an inside pocket next to body).

1. Open epoxy sealant package, and remove resin pak.
2. Holding resin pak as shown in A, bend pak along long length.
3. As shown in B, firmly squeeze the RED SIDE of the resin, forcing it through the center seal and into BLACK SIDE.
4. Mix thoroughly to a uniform color by squeezing contents back and forth 25-30 times.
5. Squeeze mixed, warm resin into one end of bag and cutoff other end.
6. Slowly insert wiring connections into sealing pack until they fit snugly against the opposite end as shown in C.
7. Twist open end of bag and use tie wrap to close it off and position the tie wrapped end up until the resin jells.

CAUTION: Epoxy sealant is irritating to eyes, respiratory system, and skin. Can cause allergic skin reaction. Contains: epoxy resin and Cycloaliphatic epoxycarboxylate.

Precautions: Wear suitable protective clothing, gloves, eye, and face protection. Use only in well ventilated areas. Wash thoroughly before eating, drinking, or smoking.

NOTE: Not required for wireless installations!

Figure 8. Epoxy sealing field wiring

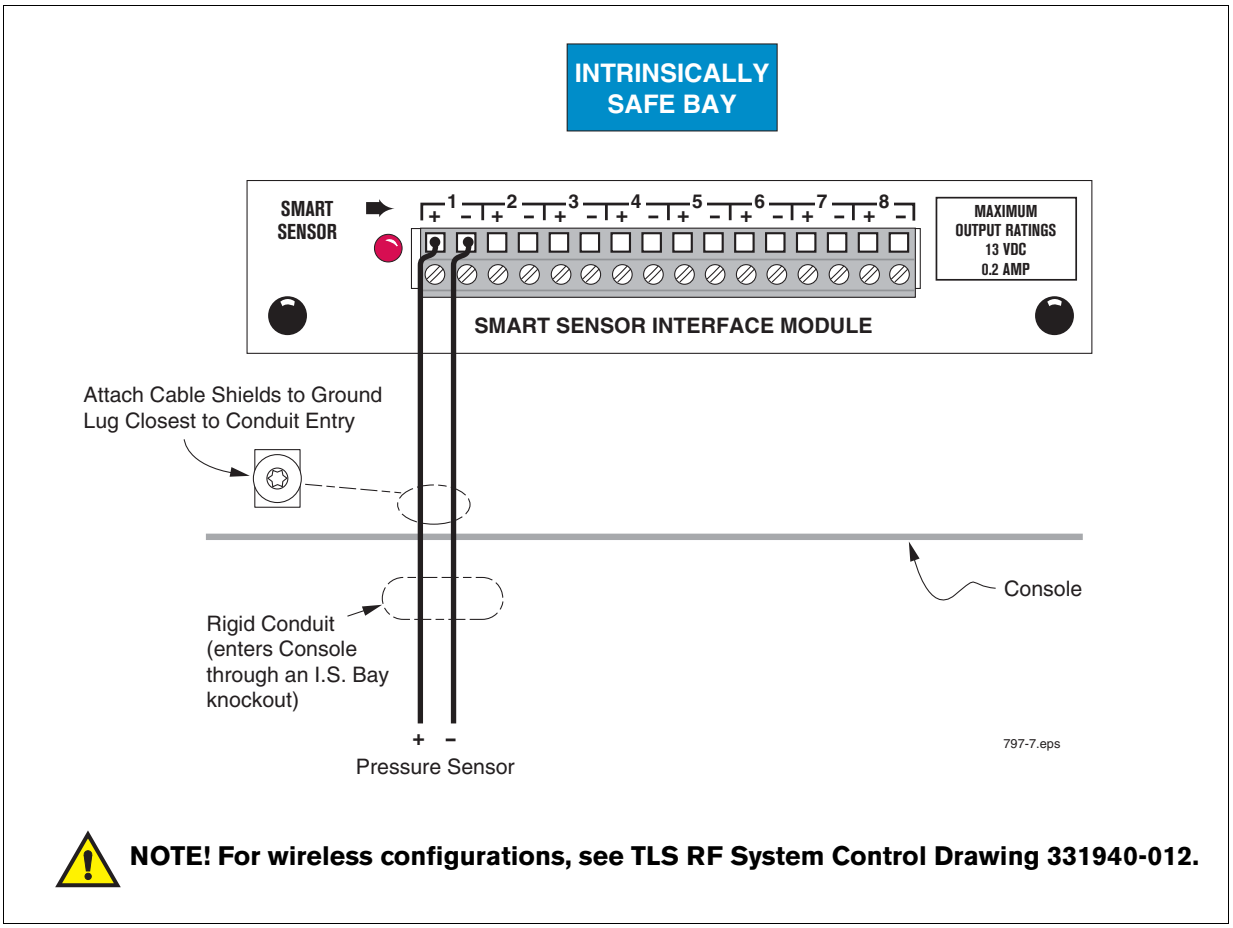

Figure 9. Connecting Pressure Sensor to TLS-3XX Smart Sensor Interface Module

Vapor Vent Stack Installation Step

1. Before installing this device, perform all required safety procedures to gain access inside the vapor vent stack.
2. Determine which vapor vent stack line is closest to the tank being monitored. Select this line for the addition of the pressure sensor.

   CAUTION: Installation of the pressure sensor on the vapor vent stack is only allowed at facilities equipped with a "Veeder-Root Vapor Polisher" or "Franklin Fueling System Healy Clean Air Separator.

3. Locate a suitable port in an existing Schedule 40 piping fitting (tee, cross, etc.) or plumb a suitable Schedule 40 pipe fitting (tee, cross, etc.) into the vapor vent stack line (maximum length of copper tubing limited by dimension in Figure 10).
4. Install the pressure sensor (item 1 in Table 2) vertically onto the center of the composite panel (item 3 in Table 2) using a 2-inch conduit clamp, rubber shim, and necessary bolts, nuts, and washers included in the kit. Be sure the top symbol on the panel is facing upwards (see Figure 11). Wrap the rubber shim (item 22 in Table 2) around the sensor before inserting it into the clamp. Also make sure the sensor cable outlet is facing up

and the pressure sensing port tube in the base of the sensor is facing down. Locate the pressure sensor in the clamp, but leave the conduit clamp screw somewhat loose for later sensor height adjustment.

5. Install two169CA-4-4 male elbows (item 4 in Table 2) into each end of the 3-way calibration valve (item 11 in Table 2) as shown (see Figure 11).
6. Install one 68CA-4-4 male connector (item 5 in Table 2) into the center port of the 3-way calibration valve, and then directly attach it to the pressure sensor inlet port (see Figure 7).
7. Screw the 59CA-4 plug (item 6 in Table 2) onto the left port's male elbow (see Figure 11).
8. Install the two plastic enclosure mounting plates to the back of the enclosure. Use the four short flat-head screws included in the enclosure hardware bag.
9. Install the composite panel into the enclosure (item 2 in Table 2) such that the sensor cable outlet is facing up and the pressure sensing port tube in the base of the sensor is facing down. The top symbol on the panel should be facing upward. Use the four short screws included in the enclosure hardware bag.
10. Make sure that the white flanged porous vent (factory installed - item 17 in Table 2) is still securely installed into the hole in the bottom of the enclosure (see Figure 11).
11. Insert the S-bend ¼" OD copper tube (item 9 in Table 2) into the right-side male elbow of the 3-way calibration valve, but do not fully tighten the compression nut (see Figure 11).
12. Locate the 62CABH-4 bulkhead union (item 7 in Table 2) and remove the compression nut and the adjustable nut then place a large washer (item 8 in Table 2) against the fixed, integral body nut. Slide the compression nut that was removed onto the bottom portion of the S-bend tube.
13. Partially insert the bulkhead union into the bottom center hole in the enclosure. Slide a large washer over the body, and thread the adjustable nut back onto the body.
14. Insert the bottom portion of the S-bend tube into the bulkhead union and fully tighten the bulkhead union adjustable nut against the large washer and enclosure wall. Adjust the pressure sensor vertically in the shim / conduit clamp to make sure the S-bend tube is fully inserted into the union and male elbow.
15. Fully tighten the compression nuts to connect the S-bend tube to the union and to the male elbow. Tighten the sensor conduit clamp screw to secure the sensor in its final vertical position (see Figure 11).
16. Mount the plastic enclosure onto the vapor vent stack or suitable rigid structure ABOVE the vapor vent stack port using two conduit clamps (for 2" or 3" pipe), bolts, nuts, and washers included, or use other customer supplied suitable mounting hardware (Example: Unistrut®). Leave the mounting hardware somewhat loose for later enclosure height adjustment (see Figure 10).
17. Measure, fabricate, and install customer supplied pipe and pipe fittings between the vapor vent stack port and within a few inches of the bulkhead union in the bottom of the enclosure.
18. Install one 68CA-4-4 male connector (item 5 in Table 2) onto the top of the new pipe (see View A-A, Figure 10).
19. Measure, fabricate, and install ¼" OD copper tubing (item 10 in Table 2) between the bulkhead union and the male connector. Adjust the enclosure vertically on vent pipe to make sure the copper tube is fully inserted into the bulk head union and male connector.
20. Fully tighten the compression nuts to secure the fabricated tube to the bulkhead union and to the male connector. Tighten the enclosure mounting hardware to secure the enclosure in its final vertical position.

    Note: **Important!** All plumbing's pitch to drain should be 1/4" vertical per 12" horizontal to eliminate any potential liquid traps.

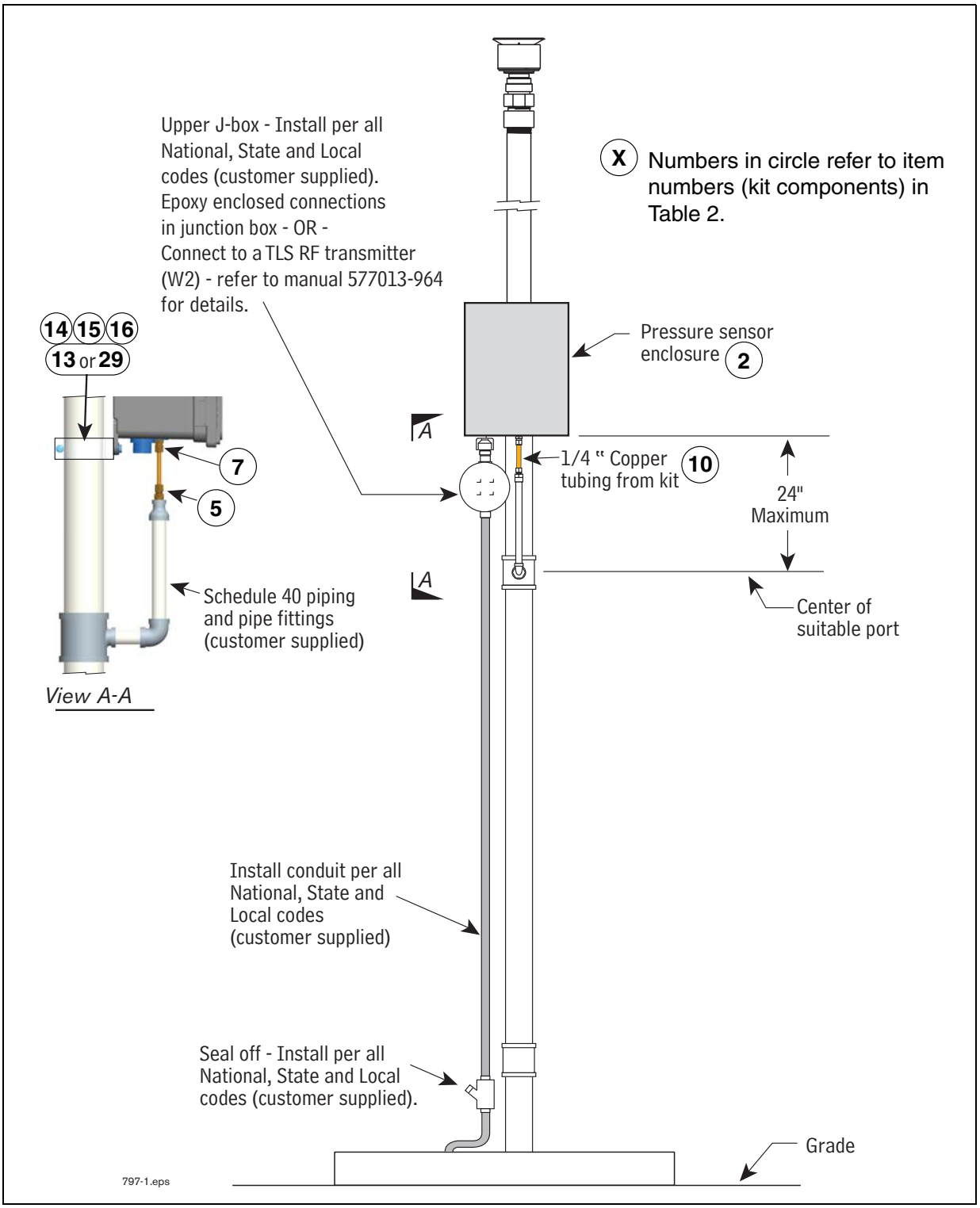

Figure 10. Locating Pressure Sensor Enclosure in Vapor Vent Stack

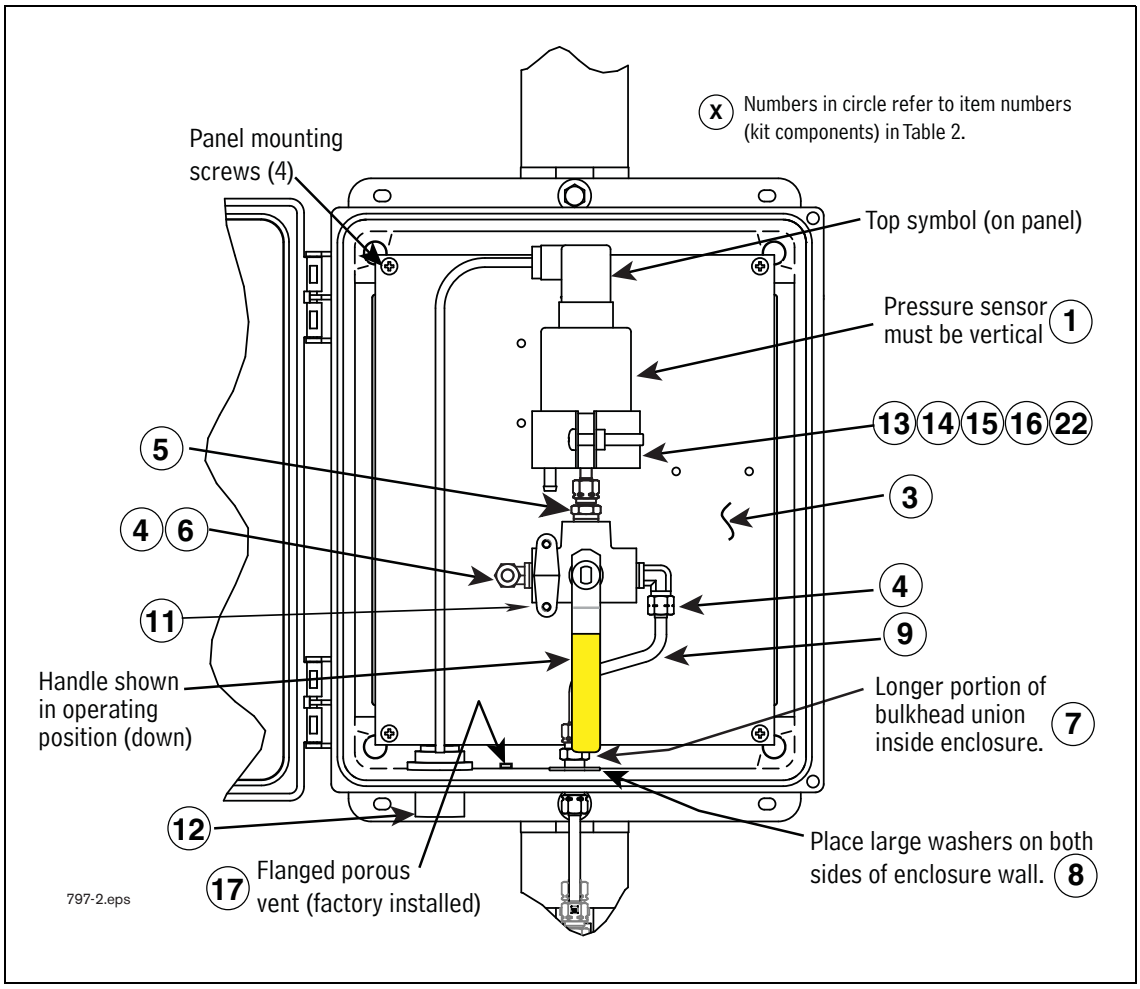

Figure 11. Mounting Pressure Sensor Assembly onto Composite Panel

21. Make sure the valve's handle is set to connect the sensor to the vapor vent stack and not to the capped (ambient) port.
22. Install two tamper-resistant screws from the enclosure hardware bag into the two holes on the enclosure door (if not already installed) using a Torx bit for tamper-resistant screws. Discard any remaining items in the enclosure hardware bag.
23. When direct wiring to a TLS console, install ½" electrical conduit from the conduit hub in the bottom of the enclosure to the customer supplied weather-proof junction box (see Figure 10). For wireless installations, using the TLS RF, Steps 23 - 27 are not required.
24. Route the cable from the pressure sensor to the junction box under the enclosure. Observing polarity, connect the sensor wiring to the field wiring from console and cap with wire nuts (see Figure 10).
25. Seal wire nuts in epoxy sealant following the instructions in Figure 8.
26. Push the epoxy sealed bag into the junction box. Replace and tighten the junction box cover.

27. Terminate field wiring into TLS Console and connect to Smart Sensor Module (TLS console - Figure 9). Note: observe polarity! The cable length between the console and sensor must not exceed the distance stated in the TLS-3XX Site Prep manual (P/N 576013-879).

    Note: Intrinsically safe devices must be installed in accordance with Article 504 of the National Electrical Code, ANSI/NFPA 70, for installation in the United States, or Section 18 of the Canadian Electrical Code for installations in Canada.

    This intrinsically safe Pressure Sensor (P/N 331946-001), has only been evaluated for connection to a UL listed TLS-3XX Liquid Level Gauge / Leak Detector.

    Conductors of different intrinsically safe circuits run in the same cable/conduit must have at least 0.01 inch (0.25 mm) of insulation.
28. After the Pressure Sensor is installed, pressurize the tank ullage space and vapor piping to at least 2 inches WC and test for leaks using leak detection solution.
29. Close the enclosure door and secure by threading the tamper-resistant screws into the enclosure body using a Torx bit for tamper-resistant screws.
30. Affix the eVRgreen label (item 30 in Table 2) to the enclosure door as desired.

VEEDER-ROOT

For technical support, sales or other assistance, please visit:
www.veeder.com

TLS RF Wireless 2 System (W2)

Installation and Maintenance Guide

VEEDER-ROOT

Notice

Veeder-Root makes no warranty of any kind with regard to this publication, including, but not limited to, the implied warranties of merchantability and fitness for a particular purpose.

Veeder-Root shall not be liable for errors contained herein or for incidental or consequential damages in connection with the furnishing, performance, or use of this publication.

Veeder-Root reserves the right to change system options or features, or the information contained in this publication as approved by ARB.

This publication contains proprietary information which is protected by copyright. All rights reserved. No part of this publication may be modified or translated to another language without the prior written consent of Veeder-Root.

Contact TLS Systems Technical Support for additional troubleshooting information at 800-323-1799.

DAMAGE CLAIMS / LOST EQUIPMENT

Thoroughly examine all components and units as soon as they are received. If any cartons are damaged or missing, write a complete and detailed description of the damage or shortage on the face of the freight bill. The carrier's agent must verify the inspection and sign the description. Refuse only the damaged product, not the entire shipment.

Veeder-Root must be notified of any damages and/or shortages within 30 days of receipt of the shipment, as stated in our Terms and Conditions.

VEEDER-ROOT'S PREFERRED CARRIER

1. Contact Veeder-Root Customer Service at 800-873-3313 with the specific part numbers and quantities that were missing or received damaged.
2. Fax signed Bill of Lading (BOL) to Veeder-Root Customer Service at 800-234-5350.
3. Veeder-Root will file the claim with the carrier and replace the damaged/missing product at no charge to the customer. Customer Service will work with production facility to have the replacement product shipped as soon as possible.

CUSTOMER'S PREFERRED CARRIER

1. It is the customer's responsibility to file a claim with their carrier.
2. Customer may submit a replacement purchase order. Customer is responsible for all charges and freight associated with replacement order. Customer Service will work with production facility to have the replacement product shipped as soon as possible.
3. If "lost" equipment is delivered at a later date and is not needed, Veeder-Root will allow a Return to Stock without a restocking fee.
4. Veeder-Root will NOT be responsible for any compensation when a customer chooses their own carrier.

FCC INFORMATION

This equipment complies with the requirements in Part 15 of the FCC rules for a Class A computing device. Operation of this equipment in a residential area may cause unacceptable interference to radio and TV reception requiring the operator to take whatever steps are necessary to correct the interference.

RETURN SHIPPING

For the parts return procedure, please follow the appropriate instructions in the "General Returned Goods Policy" pages in the "Policies and Literature" section of the Veeder-Root **North American Environmental Products** price list. Veeder-Root will not accept any return product without a Return Goods Authorization (RGA) number clearly printed on the outside of the package.

FOR INSTALLATIONS IN THE STATE OF CALIFORNIA

Please refer to the California Air Resources Board Vapor Recovery Certification Phase II EVR Executive Order web site (www.arb.ca.gov/vapor/eo-evrphaseII.htm) for the latest manual revisions pertaining to Executive Order VR202 (Healy Phase II EVR System Including ISD System), VR 203 (VST Phase II EVR System) and VR 204 (VST Phase II EVR System Including ISD System).

©Veeder-Root 2013. All rights reserved.

Introduction
Procedures Contained Within This Manual 2
Contractor Certification Requirements 2
RF Transmitter Considerations 2
Related Documents 3
Product Marking Information 3
Related Documents 3
Safety Warnings 5
Safety Symbols 5
General Precautions 6
General Precautions 6
Special Tools Required 6
National Electrical Code Compliance 6
TLS RF-To-TLS Console Wiring 6
TLS RF AC Power Wiring 7
TLS RF Wireless System Site Layout 8

Equipment Dimensions 9

Pre-Installation Component Setup and Functional Check 11

TLS RF Installation
Selecting A Location 14
Mounting the TLS RF 14
Wiring the TLS RF 14

ISD Component Installation
Vapor Flow Meter Installation - Dispenser 22
Vapor Return Pressure Sensor Installation 24
Vent Stack Installation Example 24
Connecting Cables To The Transmitter 27
Receiver Installation 29
Repeater Installation 32

Network Setup
Hardware Overview 34
Identifying Devices in the TLS RF Wireless Site Network 35
Entering Device Numbers for the Site Network 35
Transmitter Device Number 35
TLS RF Device Number 36
Entering the Site ID Number 36
Site Startup Procedure 37
Initial TLS Console Setup Procedure 37

Diagnostics
Alarms 38
Battery Diagnostics 38
Wireless Sensor Diagnostic Menu (TLS-350 Consoles) 38

Appendix A: Regulatory Information
Federal Communications Commission Notice 1
MODIFICATIONS 1
CABLES 1
Canadian Notice 2

AVIS CANADIEN 2
Battery Warning 2
Wireless Notices 2
U.S. Regulatory Wireless Notice 2
Canadian Regulatory Wireless Notice 2
System Specifications 2

Appendix B: Device DIP Switch Settings

TLS RF Number Settings 1
Transmitter/Receiver/Repeater DIP Switch Settings 2

Appendix C: Lithium Battery Safety Data

Lithium Battery Disposal Considerations 1

Figures

Figure 1. Example TLS RF Wireless System Site Layout 8
Figure 2. TLS RF Dimensions And Designated Conduit Knockouts 9
Figure 3. Wireless Component Dimensions 10
Figure 4. Connecting Wiring To Device Terminal Blocks 11
Figure 5. Wiring The Battery Cable To The Transmitter 12
Figure 6. Wiring AC Power To The TLS RF 15
Figure 7. Wiring Receiver To The TLS RF 16
Figure 8. Connecting RS-485 Wiring 17
Figure 9. Power Connections To A Daisy Chained TLS RFs 18
Figure 10. RS-485 Cable Connections When Daisy Chaining Two TLS RFs 19
Figure 11. Wiring Data Outputs from TLS RF to TLS Console 20
Figure 12. TLS RF Diagnostic LEDs And Switch Locations 21
Figure 13. Attaching Transmitter To Battery Support Bracket 22
Figure 14. Example VFM Transmitter Installation In Dispenser 23
Figure 15. VRPS Mounted In Universal Enclosure On The Vent Stack 25
Figure 16. Example VRPS Transmitter/battery Pack Installation In The Universal Enclosure 26
Figure 17. Connecting Input Wiring To Transmitter Terminal Blocks 27
Figure 18. Wiring The Transmitter 28
Figure 19. Attaching Mounting Bracket To Receiver Or Repeater 30
Figure 20. Wiring The Receiver 31
Figure 21. Wiring The Repeater 33
Figure 22. Example Site Network Diagram 34
Figure 23. Device Battery Status In TLS-350 SmartSensor Diagnostic Menu 39
Figure B-1. TLS-RF switch settings 1
Figure B-2. DIP switch settings 2
Figure B-3. S1: DIP switch positions 1-3 — (W2) All Devices 3
Figure B-4. S1: DIP switch positions 4-8 — (W2) All Devices 3
Figure B-5. S2: DIP switch positions 1-4 — (W2) Vapor Flow Meter 4
Figure B-6. S2: DIP switch positions 5-8 — (W2) All Devices 4

Tables

Table 1. Wireless 2 Devices Per TLS Console 1
Table 2. Wireless Component Kit Numbers 1

Introduction

This manual describes site preparation and installation procedures for the Veeder-Root TLS RF Wireless 2 System (W2) for Vapor Recovery monitoring. The TLS RF Wireless 2 System (W2) features two-way communication utilizing a client/server architecture resulting in improved data collection.

Veeder-Root strongly recommends the use of hard wiring for connecting Veeder-Root sensors to the TLS Console. Wired connections provide a robust communication link that is far superior to wireless networks.

A wide variety of devices can be integrated into the TLS RF Wireless 2 System (W2) network depending on the console(s) installed as shown in Table 1. Wireless component kit part numbers are shown in Table 2.

Table 1. Wireless 2 Devices Per TLS Console

Consoles	Wireless Device Vapor Flow Meter	Total Number of Wireless Devices per TLS console
8470 TLS-350 Console		32
8482 TLS-350R Console	Up to 32	32

Table 2. Wireless Component Kit Numbers

V-R Kit Order Number	V-R Component Number					
	RF Console 332242-002	Transmitter 332235-016	Repeater 332440-030	Receiver 332440-029	Battery Pack 332425-011	Enclosure 330020-716
858090-203	X		X	X		
858090-204	X		X	X		
858090-205		X			X	
330020-716						X
330020-668	X					
330020-674		X				
330020-670			X			
330020-669				X		
330020-718					X	

Procedures Contained Within This Manual

- Mounting the TLS RF and connecting power wiring.
- Installing Receiver, Repeater and Transmitters.
- Connecting the TLS RF to the TLS console.

After installing the TLS RF Wireless System devices, you must configure the sensors in the console following instructions contained in the TLS Console's System Setup Manual.

Contractor Certification Requirements

Veeder-Root Contractor Certification Requirements	Installer Certification[6]	ATG Technician Certification[7]	VR Vapor Products Certification[8]
Install[1] ISD	X	X	X
Install PMC	X	X	X
Install CCVP	X	X	X
Install Wireless ISD/PMC	X	X	X
Installation Checkout[2]		X	X
ATG Startup[3] / Training[4] / Service[5]		X	X
ISD Startup / Training / Service			X
PMC Startup / Training / Service			X
CCVP Startup / Training / Service			X
Wireless ISD/PMC Startup / Training / Service			X
Install Pressure Sensor (ATG)	X	X	X
Maintain Pressure Sensor (ATG)		X	X
Calibrate Pressure Sensor (ATG)		X	X
Clear ATG Pressure Sensor Alarm (ATG)		X	X
Clear ISD/PMC Alarms (ISD/PMC)			X

[1]Perform wiring and conduit touting; equipment mounting
[2]Inspect wiring and conduit routing; equipment mounting
[3]Turn power on, program and test the systems
[4]Provide supervised field experience in service techniques and operations
[5]Troubleshoot and provide routing maintenance
[6]UST Monitoring Systems – Installer (Level 1)
[7]Certified UST Monitoring Technician
[8]VR Vapor Products

Warranty Registrations may only be submitted by selected Distributors. Certified installers are required to provide the GDF operator with the completed Equipment Warranty Notice, form 577013-868, for their records.

RF Transmitter Considerations

Installation of this equipment in wet or below grade locations requires that the installer take steps to ensure that the equipment is mounted above the maximum water level.

CAUTION! – The Transmitter will not function properly in water. Also, submersion of the Transmitter in water can cause permanent damage to the internal electronics.

Wireless 2 devices will not function properly if certain conditions arise such as, but not limited to, the following:

- **Ambient Interference – Due to site layout or vehicles parked in the RF transmission path. For example, CSLD will not function if the transmission path is blocked for more than a few minutes.**
- **Improper equipment installation – Keep objects from improperly coming in contact with the antenna. Follow these installation instructions and mount the transmitter in a fixed position to**

ensure maximum RF connectivity. Antenna orientation is significant in achieving an optimal transmission path.

- **Equipment Sump Parameters – Sumps intended for use with RF equipment must accommodate the worst case rainfall condition that could reasonably occur. The RF Transmitter and antenna are weatherproof but will not function properly underwater.**

TLS System performance will be degraded should any of the above conditions occur and is not covered under the Veeder-Root Product Warranty. Corrective actions to such conditions are the responsibility of the station-site owner. Veeder-Root is not liable for any event that is a result of an improper installation or use of this equipment.

It is important that installers have knowledge of all relevant procedures before installing a wireless system. Read and understand all manuals thoroughly. If you do not understand a procedure, contact a certified contractor or contact Veeder-Root. Each TLS Console has its own setup and installation manuals.

Related Documents

IOM 13 VR-203 and VR-204 or IOM 18 VR-202	Vapor Pressure Sensor Installation Guide
IOM 15 VR-204	ISD Balance Flow Meter Installation Guide
576013-623	TLS-3XX System Setup Manual
331940-012	TLS RF System Control Drawing

Product Marking Information

RELATED DOCUMENTS

Documents Required to Install Equipment

This intrinsically safe apparatus is only for use as part of a Veeder-Root Automatic Tank Gauging System (ATG Console with probes and sensors). To install intrinsically safe apparatus, use the specific control drawing that appears on the nameplate of the applicable associated apparatus (ATG Console):

Equipment	UL/cUL Control Drawing Document No.
Associated Apparatus	
TLS-450/8600	331940-008
TLS-350, TLS-350R	331940-011
TLS-300	331940-013
TLS-50 or TLS2 or TLS-IB	331940-014
TLS4/8601	331940-018
TLS-XB/8603	331940-019
Intrinsically Safe Apparatus for Wireless Applications	
Tank Gauge Accessories	331940-012

The control drawings contain information related to the correct installation of the overall intrinsically Safe System. This includes information such as maximum number of apparatus, specific apparatus allowed in the system,

maximum cable lengths, references to codes, proper grounding and so on. Control drawings can be found on the accompanying Compact Disk (TECH DOCS CD) or on the internet at veeder.com under SUPPORT; VR TECHNICAL DOCUMENTS; DRAWINGS.

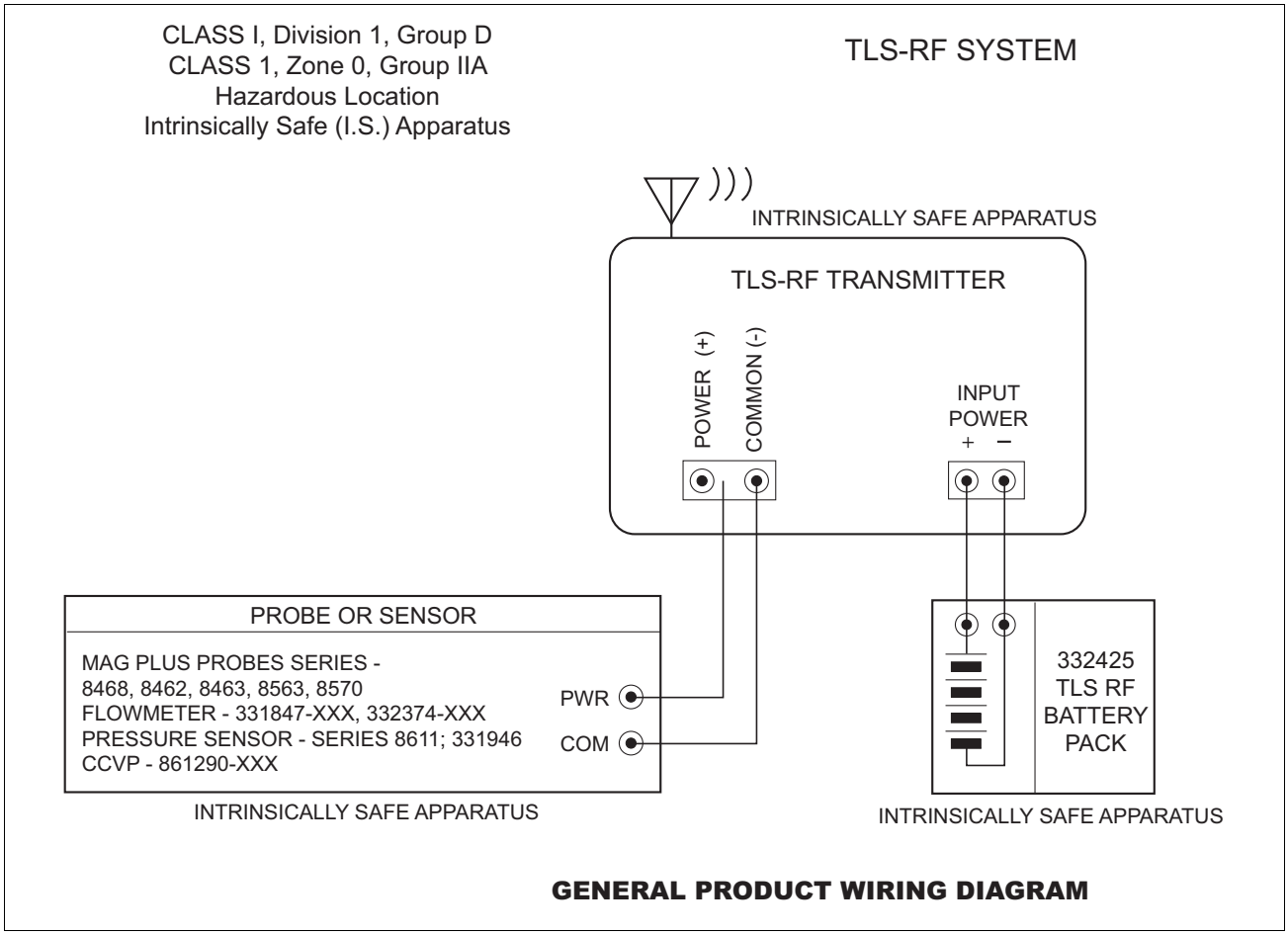

Product Label Contents

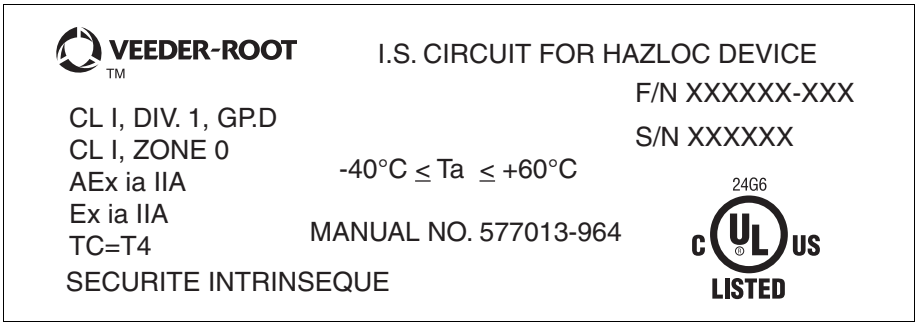

Safety Warnings

To protect yourself and your equipment, observe the following warnings and important information:

⚠ WARNING

This product is to be installed in systems operating near locations where highly combustible fuels or vapors may be present.

FAILURE TO COMPLY WITH THE FOLLOWING WARNINGS AND SAFETY PRECAUTIONS COULD CAUSE DAMAGE TO PROPERTY, ENVIRONMENT, RESULTING IN SERIOUS INJURY OR DEATH.

1. **Read and follow all instructions in this manual, including all safety warnings to protect yourself and others from serious injury, explosion, or electrical shock.**
2. **Comply with all applicable codes including: the National Electrical Code; federal, state, and local codes; and other applicable safety codes.**
3. **To protect yourself and others from being struck by vehicles, block off your work area during installation or service.**
4. **Do not alter or modify any component or substitute components in this kit.**
5. **Warning! Substitution of components may impair intrinsic safety.**
6. **Field wiring to the Probe must not share a conduit with any non-intrinsically safe device's wiring.**
7. **Warning! To prevent ignition of flammable or combustible atmospheres, disconnect battery before servicing.**
8. **Materials used in the construction of this device contain aluminum. Care must be taken to avoid ignition hazards due to impact or friction.**
9. **Before installing or taking the unit into a hazardous area, earth the unit in a safe area to remove any static charge. Then immediately transport the unit to the installation site. Do not rub or clean the unit prior to installation. Cleaning is not required under normal service conditions. Do not rub or clean the unit after installation. If the unit is not fixed to a known earth point when installed, ensure that a separate earth connection is made to prevent the potential of a static discharge. When fitting or removing the unit, use of anti-static footwear or clothing is required.**

NOTE ***Failure to install this product in accordance with its instructions and warnings will result in voiding of all warranties with this product.***

Safety Symbols

The following safety symbols may be used throughout this manual to alert you to important safety hazards and precautions.

	EXPLOSIVE Fuels and their vapors are extremely explosive if ignited.		**FLAMMABLE** Fuels and their vapors are extremely flammable.
	ELECTRICITY High voltage exists in, and is supplied to, the device. A potential shock hazard exists.		**TURN POWER OFF** Live power to a device creates a potential shock hazard. Turn Off power to the device and associated accessories when servicing the unit.

WARNING Heed the adjacent instructions to avoid damage to equipment, property, environment or personal injury.	**READ ALL RELATED MANUALS** Knowledge of all related procedures before you begin work is important. Read and understand all manuals thoroughly. If you do not understand a procedure, ask someone who does.
SAFETY BARRICADES Unauthorized people or vehicles in the work area are dangerous. Always use safety cones or barricades, safety tape, and your vehicle to block the work area.	

General Precautions

Retain and follow all product safety and operating instructions. Observe all warnings on the product and in the operating instructions. To reduce the risk of bodily injury, electric shock, fire, or damage to the equipment, observe the following precautions.

FAILURE TO COMPLY WITH THE FOLLOWING WARNINGS AND SAFETY PRECAUTIONS COULD CAUSE DAMAGE TO PROPERTY, ENVIRONMENT, RESULTING IN SERIOUS INJURY OR DEATH.

GENERAL PRECAUTIONS

Heed service markings: Opening or removing the console cover may expose you to electric shock. Servicing of Veeder-Root equipment must be done by Veeder-Root authorized service contractors.

Use product with approved equipment: This product should be used only with Veeder-Root components identified as suitable for use with the TLS RF Wireless System.

Use the correct external power sources: This product should be operated only from the type of power sources indicated on the electrical ratings labels affixed to the components. If you are not sure of the type of power source required, consult your Veeder-Root authorized service contractor.

When not in use, a longer battery life can be achieved by keeping the battery pack in a cool, dry location where the temperature never exceeds 30°C or 86°F and does not go below 10° C or 50° F.

SPECIAL TOOLS REQUIRED

- #15 Torx screwdriver
- Small blade screwdriver (maximum blade width 3/32”)
- Wire strippers

National Electrical Code Compliance

The following information is for general reference and is not intended to replace recommended National Electric Code (NEC) procedures. It is important for the installer to understand that electrical equipment and wiring located in Class I, Division 1 and 2 installations shall comply with the latest appropriate articles found in the National Electric Code (NFPA 70) and the Code for Motor Fuel Dispensing Facilities and Repair Garages (NFPA 30A), or other local code such as the CEC, Canadian Electrical Code.

TLS RF-TO-TLS CONSOLE WIRING

Wire Type
To ensure the best operating systems available, Veeder-Root REQUIRES the use of shielded cable.

Wire Length
Improper system operation could result in undetected potential environmental and health hazards if the TLS RF-to-TLS Console wire runs exceed 1000 feet. Wire runs must be less than 1000 feet to meet intrinsic safety requirements.

Splices
Veeder-Root recommends that a minimum number of splices are used in the wire run between the TLS RF and the TLS Console. Each splice degrades signal strength and could result in poor system performance.

Wire Gauges - Color coded
Shielded cable must be used in all installations. TLS RF-to-TLS Console wires must be #14 to #18 AWG stranded copper wire and installed as a Class 1 circuit.

Alternate Method
When approved by the local authority having jurisdiction, 22 AWG wire such as Belden 88761 may be suitable in installations with the following provisions:

- Wire run is less than 750 feet
- Capacitance does not exceed 100 pF/foot
- Inductance does not exceed 0.2 µH/foot

TLS RF AC POWER WIRING

Wires carrying 120 or 240 Vac from the power panel to the TLS RF must be at least#14 AWG copper wire for line, neutral and chassis ground (3); and #12 AWG copper wire for barrier ground (1).

NOTE: Note: See page 32 for details of Repeater Power Wiring.

TLS RF Wireless System Site Layout

Figure 1 illustrates an example TLS RF Wireless System installation. The Repeater component may be required if the system Receiver, mounted on building's outside wall, has difficulty receiving signals from any of the Transmitters. See page 32 for Repeater installation.

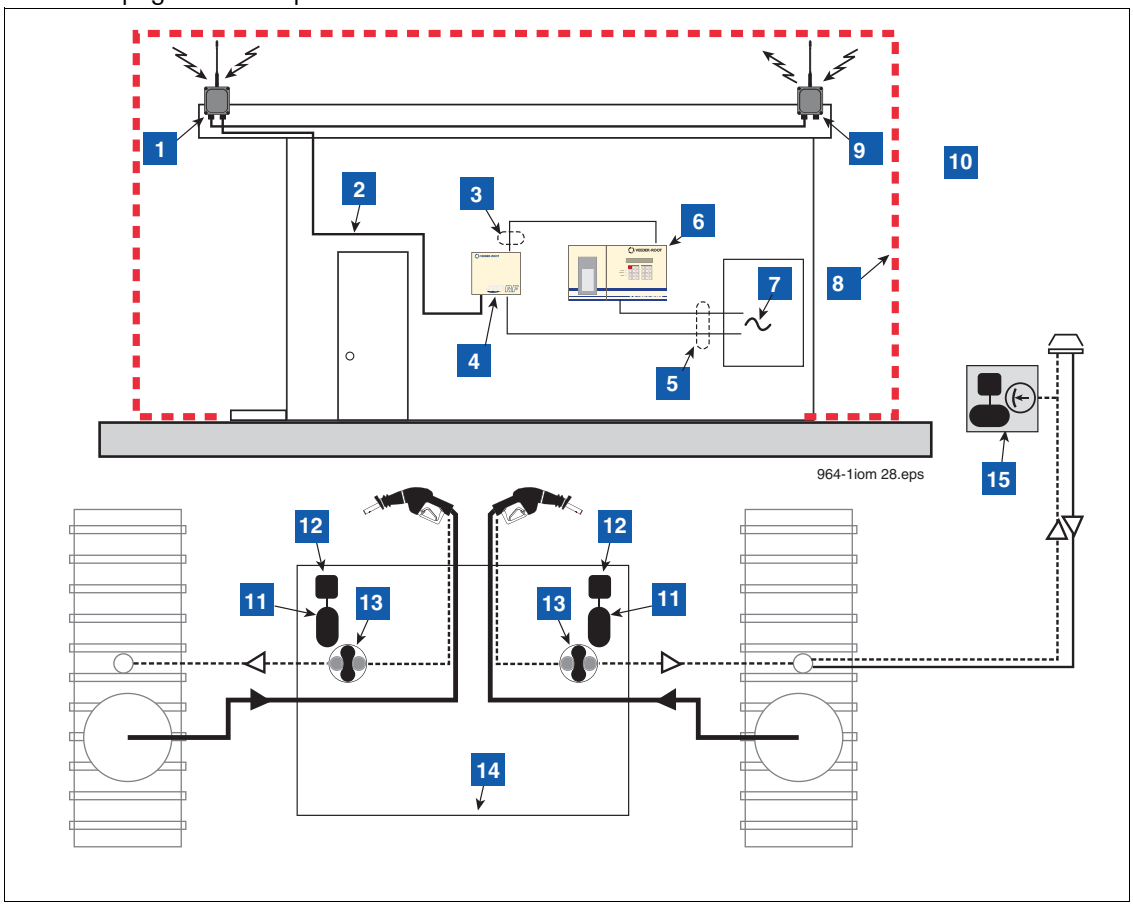

Figure 1. Example TLS RF Wireless System Site Layout

LEGEND FOR NUMBERED BOXES IN Figure 1

To be installed in accordance with the National Electrical Code, NFPA 70 and the Code for Motor Fuel Dispensing Facilities and Repair Garages (NFPA 30A), or other local codes such as the CEC, Canadian Electrical Code.

WARNING! Substitution of components may impair intrinsic safety.

Circuitry within the console barrier forms an intrinsically safe, energy-limited system. This system is intrinsically safe for use in a Class I, Group D hazardous location.

1. Receiver (1 per RF System)
2. RS-485 Cable (Belden #3107A or equiv.)
3. NOTE: Intrinsically safe wiring shall be installed in accordance with Article 504-20 of the NEC, ANSI/ NFPA 70. Max cable length 1000 ft. (304 m).W2 Receiver (1 per RF System)
4. TLS-RF
5. Conduit that enters power wiring knockout.
6. TLS console (Vm = 250 V)
7. 120 or 230 Vac from power panel
8. Non-hazardous area
9. Repeater (1 per RF System)
10. Hazardous area (Class I, Div. 1, Group D)
11. Transmitter
12. Battery pack
13. Vapor Flow meter
14. Dispenser sump
15. VPRS sensor (w/transmitter/battery in enclosure)

Equipment Dimensions

Dimensions of the TLS RF are shown in Figure 2.

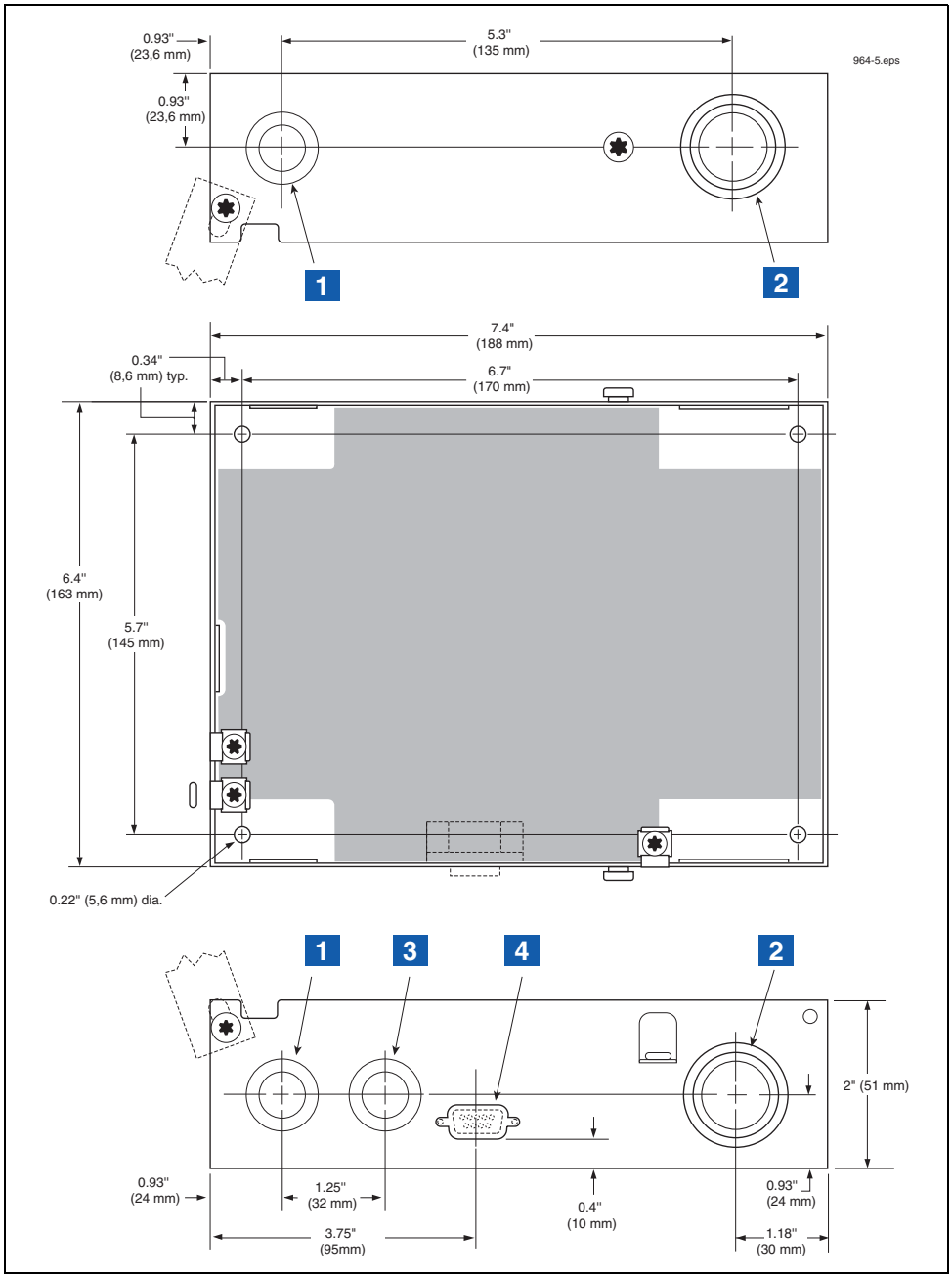

Figure 2. TLS RF Dimensions And Designated Conduit Knockouts

LEGEND FOR NUMBERED BOXES IN Figure 2	
1. Designated power wiring knockouts	3. RS-485 knockout
2. Designated intrinsically-safe wiring knockouts	4. RS-232 knockout

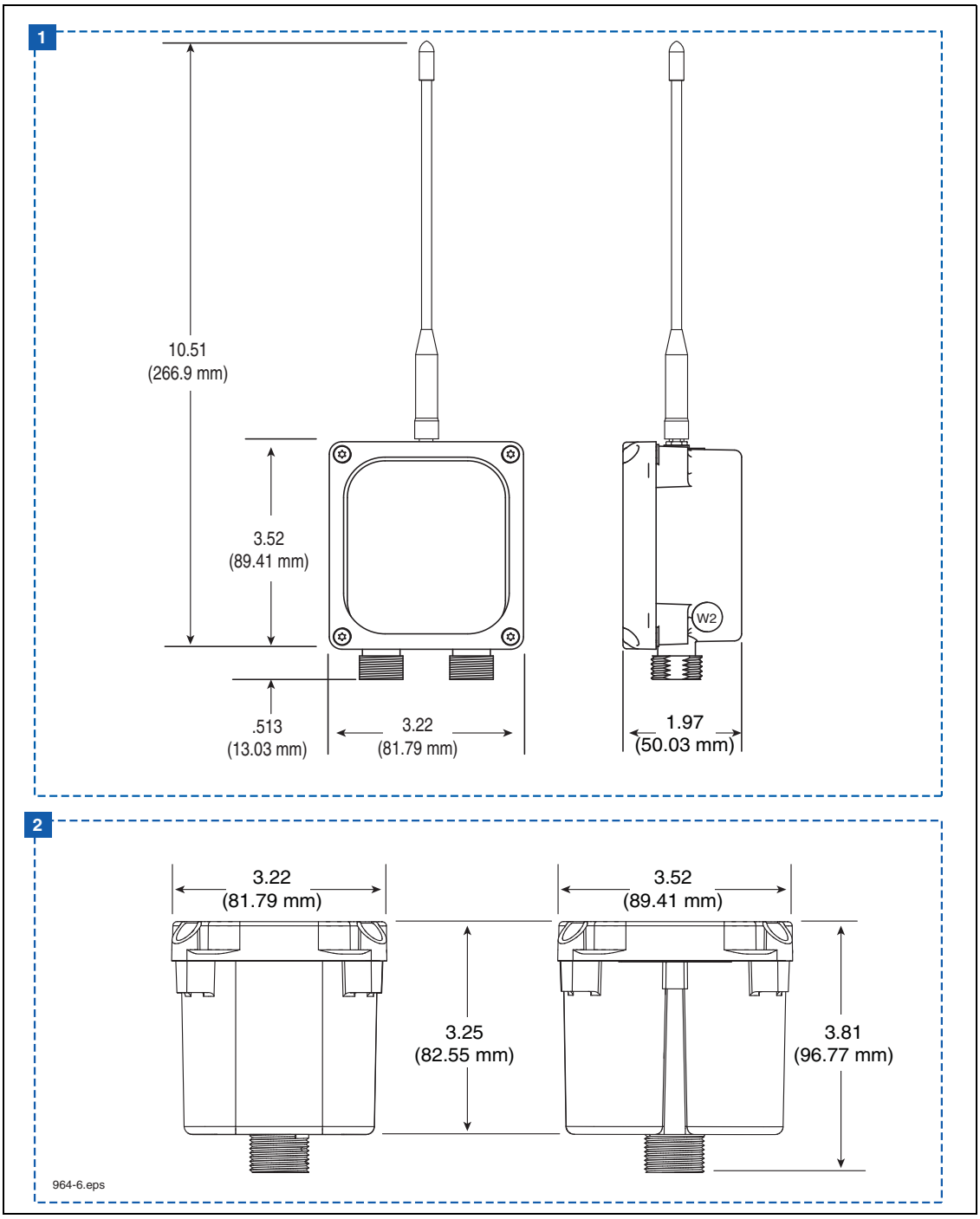

Figure 3. Wireless Component Dimensions

LEGEND FOR NUMBERED BOXES IN Figure 3	
1. W2 Receiver, W2 Transmitter, and W2 Repeater dimensions	2. Battery housing dimensions

Pre-Installation Component Setup and Functional Check

The steps below describe the process of verifying the Wireless System component functionality; listed steps are only for one TLS RF. If there are more than 8 Sensors installed at the site, refer to Appendix B on how to setup the DIP Switches for auxiliary TLS RF(s).

1. Remove all the hardware from their boxes; lay the TLS RF, Receiver, Repeater, and all the Transmitters on a table.
2. Set Site ID for the Receiver, Repeater, and all the Transmitters (refer toAppendix B on how to set up the Site ID). Typically the Site ID is set to 0 (default). **If there is a nearby wireless site, the Site IDs must be different.**
3. Set all Transmitter's Device Numbers and connect the battery cables to all the Transmitters. Label each Transmitter with its site ID.
   a. Using a #15 torx driver, remove the cover of the Transmitter.
   b. Remove the nut from the battery cable cord grip (right side cord grip) and slide it over the non-connector end of the battery cable.
   c. Make sure the battery/dc power cable is not connected to the battery pack or dc power source at this time. Push the battery cable through the battery cable cord grip bushing and into the Transmitter.
   d. Strip back the cable jacket and wires as shown in Figure 4.
   e. Connect the battery pack/dc power cable to the BATTERY terminal block (white to +IN and black to -IN) as shown in Figure 5.
   f. **Hand tighten both cable entry cord grip nuts to prevent water entry!**
   g. Replace the cover of the Transmitter, but do not tighten down cover screws at this time.

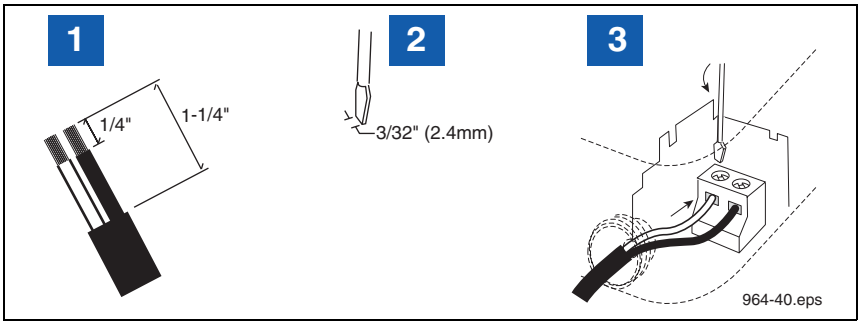

Figure 4. Connecting Wiring To Device Terminal Blocks

LEGEND FOR NUMBERED BOXES IN Figure 4	
1. Strip back cable and wire jackets the amount shown.	3. Both wires must be tight in terminals!
2. Use a screwdriver with the proper blade width.	

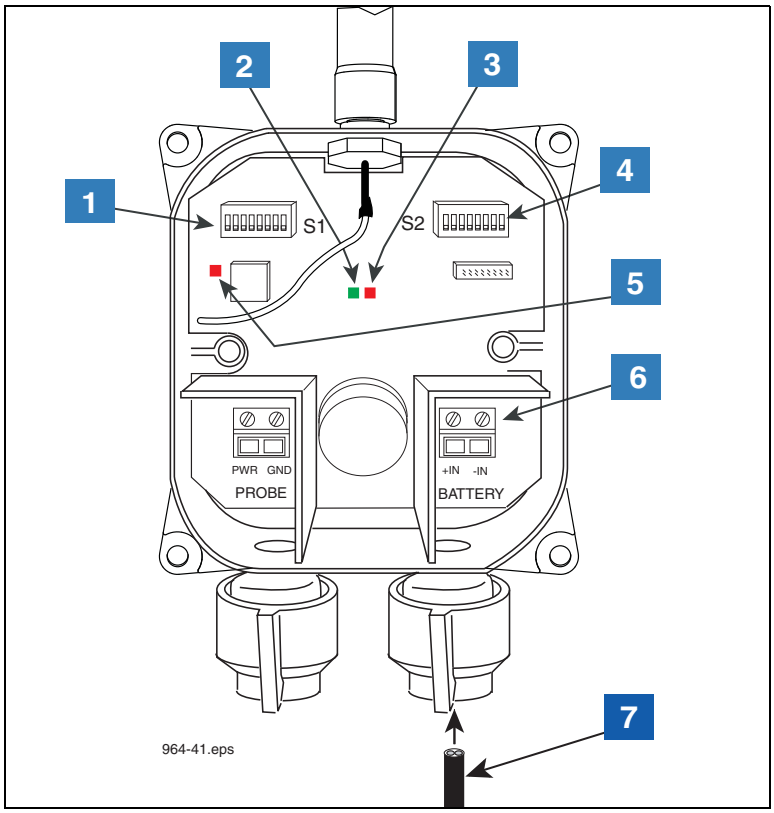

Figure 5. Wiring The Battery Cable To The Transmitter

LEGEND FOR NUMBERED BOXES IN Figure 5	
1. S1 DIP switch	6. Battery power-in terminals (+IN and –IN). Observe polarity!
2. Green LED – Unit status.	**Pay close attention to the polarity of the +15 Vdc. Reversing the connections can cause damage to the TLS RF.**
3. Red LED – Radio status.	7. Cable from battery pack
4. S2 DIP switch	
5. Red LED – Flashes only when radio is powered on in Diagnostic Mode.	

4. Using a #15 torx driver, open the covers of the TLS RF, Repeater and Receiver. Make a temporary ac power cord with a grounded plug on one end. Connect the ac power cord to the TLS RF's input power terminals and ground terminal (refer to Figure 6 and Figure 7). Connect a necessary length of RS-485 cable from the TLS RF's RS-485 terminals to the Receiver's RS-485 terminals (refer to Figure 20). Connect a necessary length of 2-conductor cable from the Receiver's Repeater terminals to the Repeater's Repeater terminals (refer to Figure 21).

5. The steps below are to verify the communication between the TLS RF Unit and the Receiver.

   a. Plug the TLS RF's ac power cord into a 120/240 Vac outlet. Confirm the Green /Red LEDs (refer to item 2 in Figure 12), are flashing rapidly. This is an indication there is RS-485 network activity between the TLS RF and the Receiver.

   b. If it is, continue to Step 6.

   c. If it is not, check PWR LED (refer to item 3 in Figure 12), if not lit; check power wiring. If the wiring is correct, measure the voltage across the twisted pair power wires, it should read +15Vdc. If it is not, the TLS RF is bad.

d. If the Red LED (refer to item 2 in Figure 12) is not flashing, confirm the TLS RF address is set to Master (refer to Appendix B, Figure B-1on how to set the TLS RF Device Number). If it is, the TLS RF has failed.

e. If the Red LED is flashing and the Green LED is not flashing, the TLS RF is not receiving a response from the Receiver.

f. Confirm the Receiver PWR LED is lit (refer to item 1 in Figure 20). If not check the power wiring.

- If the power wiring is correct, measure across the +15V and GND (refer to item 4 in Figure 20), it should be +15Vdc. If it is not, measure the voltage across the +15V and GND terminals in the TLS RF, it should read +15Vdc. If it does, replace the twisted pair power wires. If it does not, the Receiver is bad.
- Check the RS-485 Green LED (refer to item 1 (PWR LED) in Figure 20), if it is flashing; it is receiving Data from the TLS RF. If it is not flashing, check the RS-485 cabling between the TLS RF and the Receiver.
- Check the Red LED (XMIT LED, [item 1 in Figure 20]), if it is flashing; check the cabling. If it is not flashing, the Receiver is at fault; replace the Receiver.

6. This step is to verify to make sure Data from the Transmitter is being received by the TLS RF. Make sure the power to the Repeater is off.

a. Connect the first Transmitter's battery cable to a battery pack; noting the Red LED should be flashing momentarily then followed by the Green LED (refer to item 2 and 3 in Figure 5). Since there is no Sensor connected, the two LEDs should be flashing. This is an indication a Sensor communication error and is acceptable at this step.
TIP - Normal flashing is when an LED turns On for over 1 second and turns Off for over 1 second. Error flashing is when an LED turns On and Off every 1/2 second or less.

b. Go to the TLS RF, open its cover. One of the 8 Red received LEDs should be flashing (refer to item 5 in Figure 12). Observe which LED is lit and compare it against the Transmitter Device Number; they should match. For example, if the Transmitter ID is set to 1, the LED number 1 in the TLS RF should be flashing.

c. If the Transmitter Device Number and the LED in the TLS RF do not match, disconnect the Transmitter's battery cable from the battery pack. Move this DIP switches back and forth a few times to make sure they are set properly. Reset this DIP Switch to the correct setting; reconnect the battery cable; confirm that the correct LED is flashing.

d. If they still do not match, disconnect the Transmitter's battery cable from the battery pack; change the Transmitter Device Number to different setting and repeat Step 6.

e. If resetting the Transmitter to a different Device Number and the LED position in the TLS RF matches; that DIP Switch position is bad, the Transmitter is at fault.

f. If resetting the Transmitter to a different Device Number and the LEDs in the TLS RF and the Transmitter are not matched; remove the power from the Transmitter and put it aside.

g. Repeat Step 6 with the next Transmitter.

h. If both Transmitters have the same problems, it could be the Receiver or the TLS RF.

i. In the case where the LED in the TLS RF is not flashing, check the Site ID in the Receiver and the Transmitter to make sure they are correct. If the Site IDs are correct, the Transmitter or the Receiver is at fault. NOTE: Sometimes it is necessary to disconnect the battery cable from the battery pack and wait for 2 minutes and retry again to make sure the connection is established properly.

7. If all the Transmitters have been verified to be working properly, they are now ready to be installed.

8. Unplug the TLS RF, disconnect the temporary power cable and RS-485 cable to the Receiver and close the cover of the TLS RF, but do not tighten the cover screws at this time.

9. Disconnect the temporary RS-485 and 2-conductor cables from the Receiver and replace its cover, but do tighten at this time. Disconnect the temporary 2-conductor cable from the Repeater and replace its cover, but do not tighten at this time.

TLS RF Installation

Selecting A Location

⚠ WARNING

Explosive vapors or flammable liquids could be present near locations where fuels are stored or being dispensed. The TLS RF is not explosion proof.

An explosion or fire resulting in serious injury or death, property loss and equipment damage could occur if the console is installed in a volatile, combustible or explosive atmosphere (Class I, Division 1 or 2).

Do not install this unit in a volatile, combustible, or explosive atmosphere.

The TLS RF must be mounted indoors, protected from severe vibration, extremes in temperature and humidity, and other conditions that could harm computerized electronic equipment.

Ensure that the TLS RF is located where neither it nor its associated cabling will be damaged by doors, furniture, etc. Consider the ease of routing wiring, and ducting to the TLS console. Check that the mounting surface is strong enough to support the unit's weight of about 4 pounds.

Mounting the TLS RF

Install the unit's fastening devices to the mounting surface using the hole pattern (6.7" x 5.7") shown in Figure 2. Mounting screws up to 3/16" diameter may be used.

Install metal conduit (1/2-inch I.P.S.) between the upper power side knockout on the unit and the power panel. Figure 2 shows the two designated knockouts (one each on top and bottom) through which power wiring can safely enter the unit.

Also install metal conduit (1/2-inch I.P.S.) between the lower intrinsically-safe wiring knockout on the TLS RF and an intrinsically-safe wiring knockout on the TLS console for device data wiring.

Wiring the TLS RF

⚠ WARNING

The unit contains voltages which can be lethal.

Connecting power wires to a live circuit can cause electrical shock that may result in serious injury or death.

Turn power off at the circuit breaker before connecting wiring to the TLS RF.

Attach conduit from the power panel to the unit's power wiring knockouts only (1 on top and 1 on bottom, ref. Figure 2)

To connect power wiring see Figure 6. To connect Receiver wiring see Figure 7. To daisy chain two TLS RFs, see Figure 9 and Figure 10. To connect TLS RF data output wiring to the TLS console see Figure 6.

WARNING! Do not apply power to the TLS RF Console until all device wiring is complete. This includes the wiring for the Receiver, Repeater, the probes and additional TLS RF Consoles.

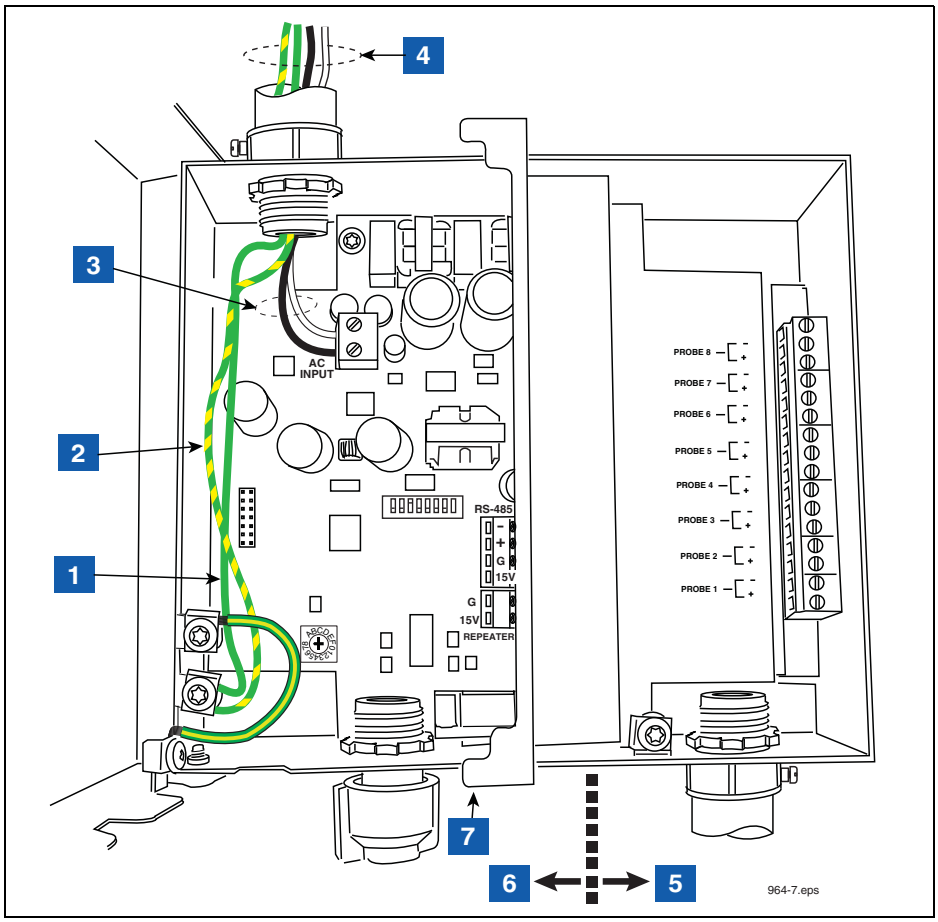

Figure 6. Wiring AC Power To The TLS RF

LEGEND FOR NUMBERED BOXES IN Figure 6	
1. Attach chassis ground wire (#14 AWG) to ground lug. 2. Protective earthing conductor (green and yellow). Attach #12AWG barrier ground wire to ground lug. Ground must be the same as the supply and less than 1.0 ohms to ground. 3. AC power input wires (#14 AWG) to AC INPUT terminals. 4. POWER WIRING NOTES: • Barrier ground must be #12 AWG or larger diameter. • Check to be sure that the electrical resistance between the unit ground lug and a known good earth ground is less than 1 ohm. • Connect the power supply wires in the power panel to a separate dedicated circuit. • Electrical rating power input - 120 Vac or 240 Vac, 50/60 Hz, 2 A max. • See Figure 2 for actual locations of power conduit knockouts into the unit. Power wiring must enter only in one of these knockouts.	5. Intrinsically-safe side 6. Power side 7. RS-232 diagnostic port: • Baud rate - 9600 • Data length - 8 • Parity - None • Stop bits - 1

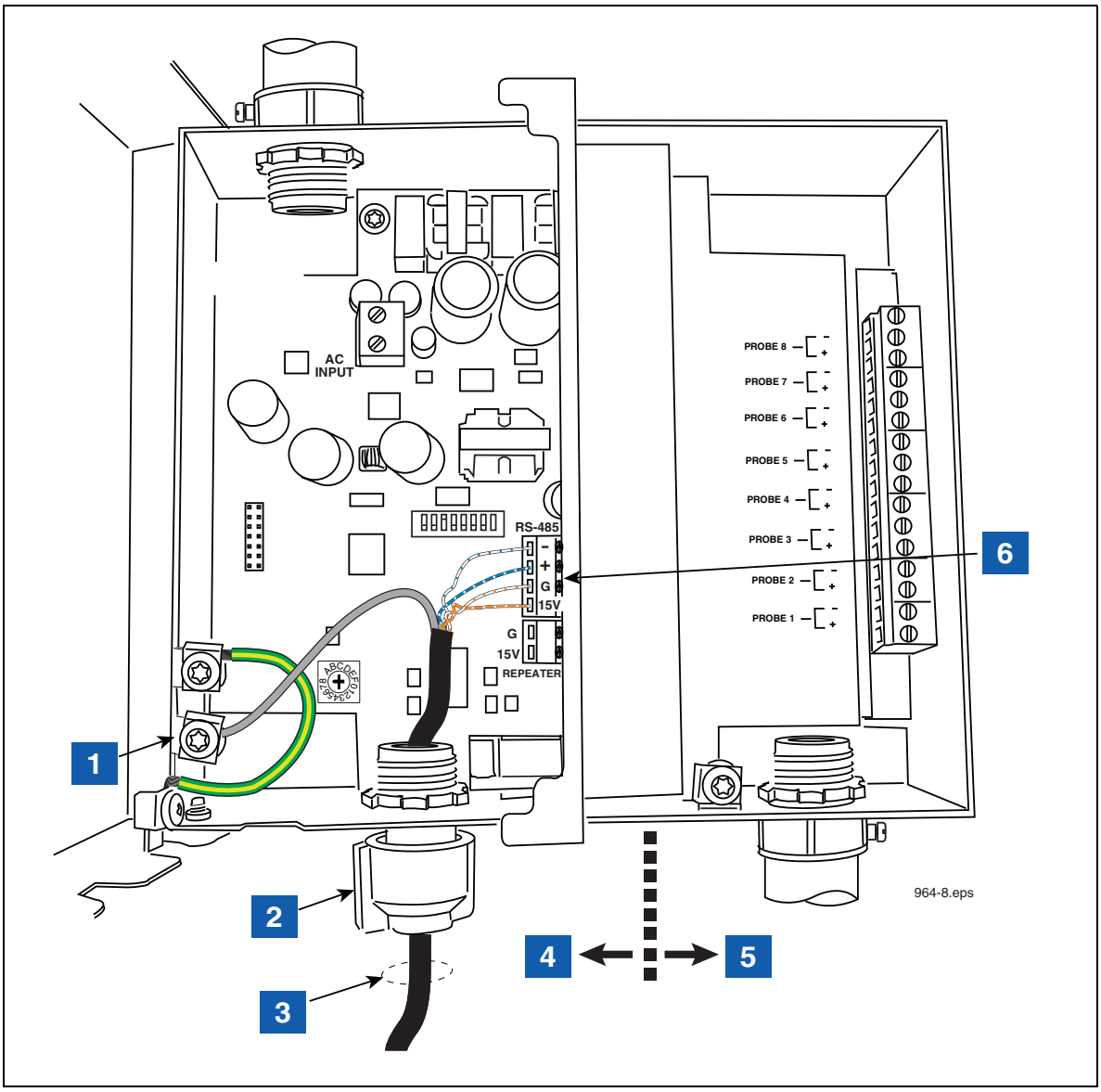

Figure 7. Wiring Receiver To The TLS RF

LEGEND FOR NUMBERED BOXES IN Figure 7	
1. Connect the shield of the RS-485 cable to the ground lug. 2. Cord grip 3. RS-485 cable to Receiver 4. Power side 5. Intrinsically-safe side 6. NOTE: Attach one end of RS-485 cable to the RS-485 terminals in the TLS RF and other end to the RS-485 terminals in the Receiver. One twisted pair connects to terminals - and + (RS-485 signals) and the second twisted pair connects to terminals +15 and G (Receiver power).	6 (Cont'd.). Connect each of the four wires to the same terminals in the Receiver (ref. Figure 20). NOTE: see Figure 4 for wire connection tips.NOTE: In sites with more than one TLS RF, the Receiver is only connected to the master TLS RF.

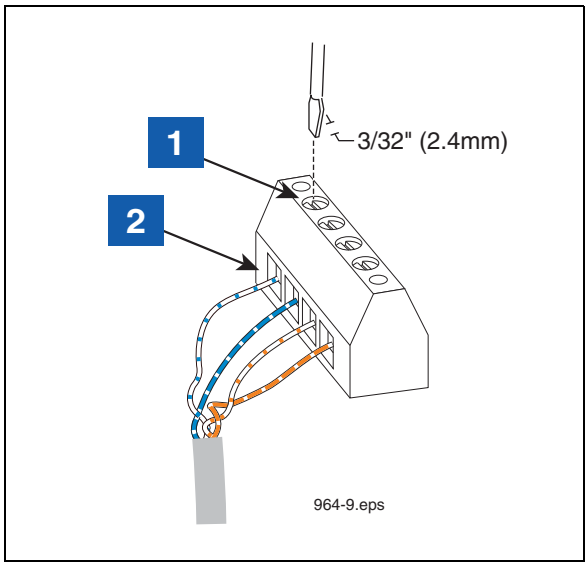

Figure 8. Connecting RS-485 Wiring

LEGEND FOR NUMBERED BOXES IN Figure 8	
1. Use small blade screwdriver and loosen terminal by turning top screw over desired terminal counter clockwise. DO NOT raise screw head above top of hole or it may disengage from clamp.	2. Insert 1/4” stripped wire into terminal clamp’s side opening and tighten screw clockwise until wire cannot be moved in or out.

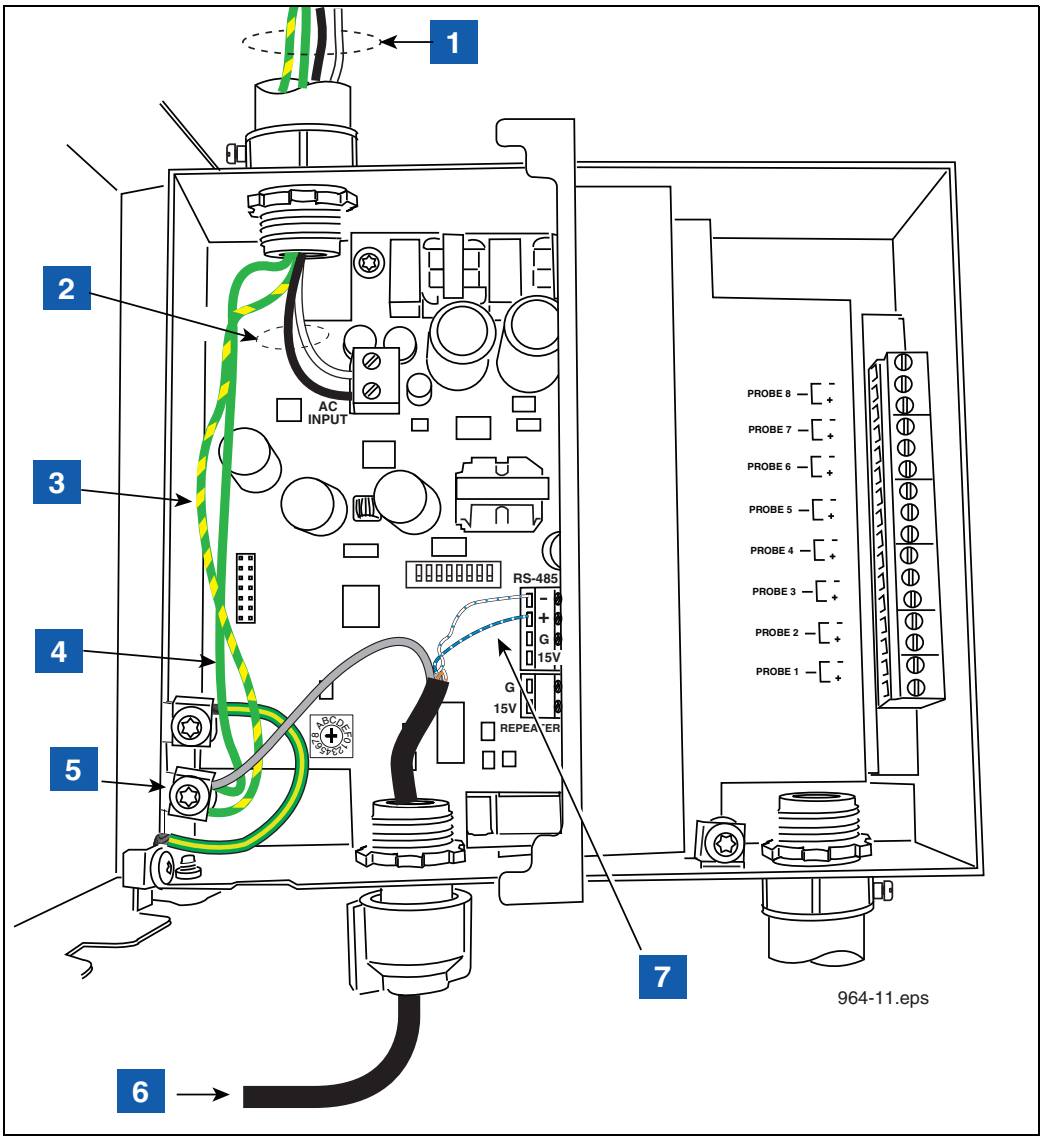

Figure 9. Power Connections To A Daisy Chained TLS RFs

LEGEND FOR NUMBERED BOXES IN Figure 9	
1. POWER WIRING NOTES: • Barrier ground must be #12 AWG or larger diameter. • Check to be sure that the electrical resistance - between the unit ground lug and a known good earth ground is less than 1 ohm. • Connect the power supply wires in the power panel to a separate dedicated circuit. • Electrical rating power input - 120 Vac or 240 Vac, 50/60 Hz, 2 A max. • See Figure 2 for actual locations of power conduit knockouts into the unit. Power wiring must enter only in one of these knockouts. 2. AC power input wires (#14 AWG) to AC input terminals.	3. Protective earthing conductor (green and yellow). Attach #12AWG barrier ground wire to ground lug. Ground must be the same as the supply and less than 1.0 ohms to ground. 4. Attach chassis ground wire (#14 AWG) to ground lug. 5. Connect the shield of the RS-485 cable to the ground lug. 6. RS-485 cable from master TLS RF. 7. See Figure 10 for connections.

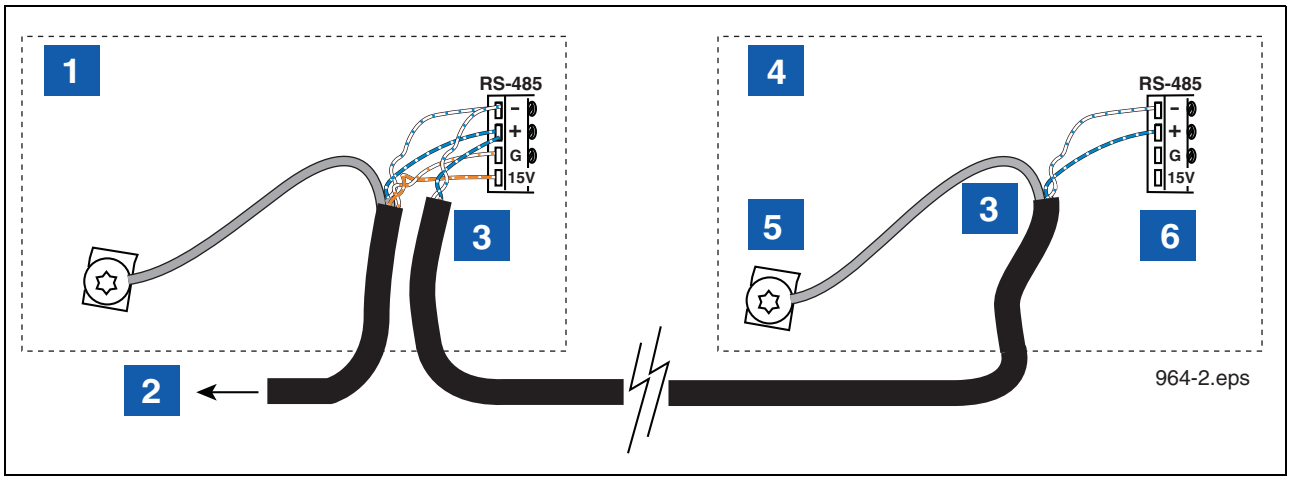

Figure 10. RS-485 Cable Connections When Daisy Chaining Two TLS RFs

LEGEND FOR NUMBERED BOXES IN Figure 10	
1. Master TLS RF	5. Connect the shield of the RS-485 cable to the ground lug.
2. RS-485 cable to Receiver.	6. Connect like colored wires of the twisted pair to like terminals in the auxiliary TLS RF. Each additional TLS RF connects in the same way.
3. RS-485 cable to auxiliary TLS RF. Cut the unused twisted pair back to the cable's jacket at each end of the cable. Maximum cable length is 500 feet if a communication grade cable is used.	
4. Auxiliary TLS RF	

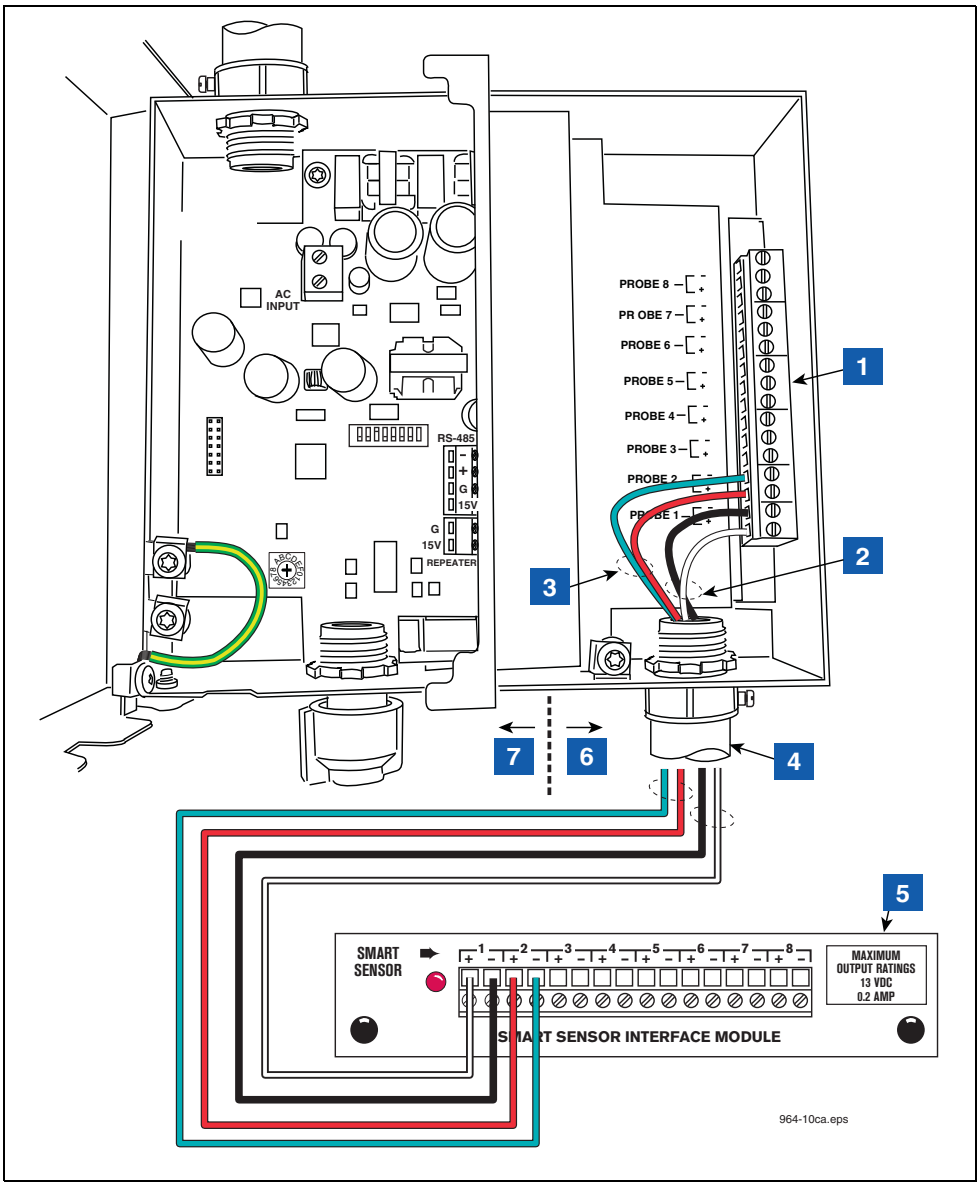

Figure 11. Wiring Data Outputs from TLS RF to TLS Console

LEGEND FOR NUMBERED BOXES IN Figure 11

Note: Output wiring from the TLS RF to the TLS console is an intrinsically safe circuit.

NOTE: Intrinsically safe wiring shall be installed in accordance with Article 504-20 of the NEC, ANSI/NFPA 70.

1. Received Transmitter data output terminals (1-8).
2. In this example, device output 1 is a Flow Meter - Observe polarity. Note: each time a transmission is received from this device, LED 1 (see item 5 in Figure 12) will flash.
3. In this example, device output 2 is a Flow Meter - Observe polarity. Note: each time a transmission is received from this device, LED 2 (see item 5 in Figure 12) will flash.
4. 1/2” i.p.s. conduit to TLS console
5. SmartSensor interface module in TLS console
6. Intrinsically-safe side
7. Power side

Figure 12 locates the diagnostic lights and setup switches in the TLS RF.

Each TLS RF in the site network must have a unique device set number (0,1,2 or 3). The factory default setting is ‘0’. You must select ‘0’ for the master TLS RF. The site’s Receiver must also be connected to the master TLS RF.

If a second TLS RF is required, enter ‘1’ in the auxiliary TLS RF. For additional TLS RFs, enter ‘2’ for the third and ‘3’ for the fourth.

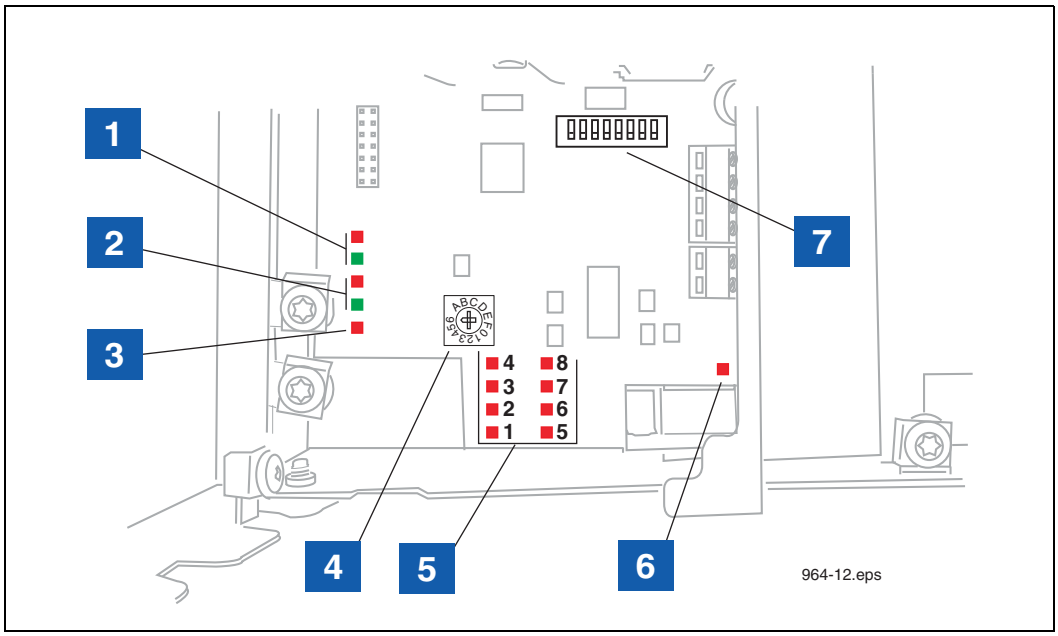

Figure 12. TLS RF Diagnostic LEDs And Switch Locations

LEGEND FOR NUMBERED BOXES IN Figure 12	
1. These LEDs flash when there is comm activity on RS-232 port (Red = TX, Green = RX).	5. These red LEDs flash when a message is received from a Transmitter in the monitored device set. LED 1 is the device wired to I.S. output terminal 1. LED 2 is the device wired to output terminal 2, etc.
2. These LEDs flash when there is comm activity on the RS-485 network (between TLS RF and Receiver).	6. Red LED flashes when TLS console is polling for device data.
3. Red LED is lit when TLS RF is powered on.	7. S2 DIP switches 1–2 enter device set address (see Appendix B).
4. Device time out rotary switch selects the maximum allowed time to wait for communication from Transmitter before a Comm alarm is posted by TLS console (see Appendix B for selections). Position 1 (10 minutes) is the factory default setting.	

Vapor Flow Meter Installation - Dispenser

1. A Transmitter/battery pack pair must be installed with the Veeder-Root Vapor Flow Meter (VFM) in the dispenser cabinet.
2. Install the VFM in the dispenser following instructions accompanying the VFM.
3. Using two taptite screws from the kit, attach the Transmitter housing to the side of the battery support bracket that has the two circular slots (see Figure 13). Do not tighten screws at this time.
4. Remove the cover from the transmitter. Attach the non-connector end of the cable from the VFM to the transmitter as described in the section below entitled "Connecting Cables To The Transmitter" on page 27, then attach the transmitter/L bracket assembly to the back mounting surface using two #10 taptite screws from the kit.
5. Determine a support location within the dispenser cabinet that will allow you room for the transmitter/battery support bracket. Clamp the bracket to an available support structure (see Figure 14).
6. Rotate the Transmitter antenna as close as possible to a horizontal position then tighten two mounting screws in housing.
7. Insert the battery pack into its support bracket - do not connect the battery cable to the battery pack at this time.
8. Do not replace dispenser sheet metal cover until completing the "Site Startup Procedure".

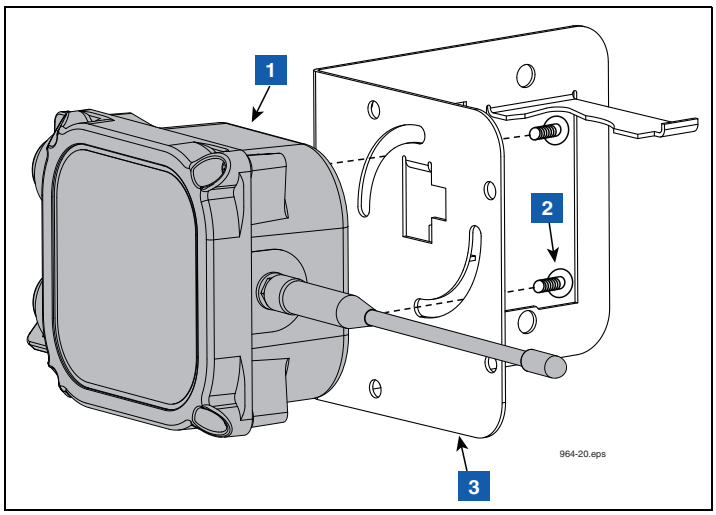

Figure 13. Attaching Transmitter To Battery Support Bracket

LEGEND FOR NUMBERED BOXES IN Figure 13
1. Transmitter
2. #10 x 1/2" taptite screws (2)
3. Battery support bracket

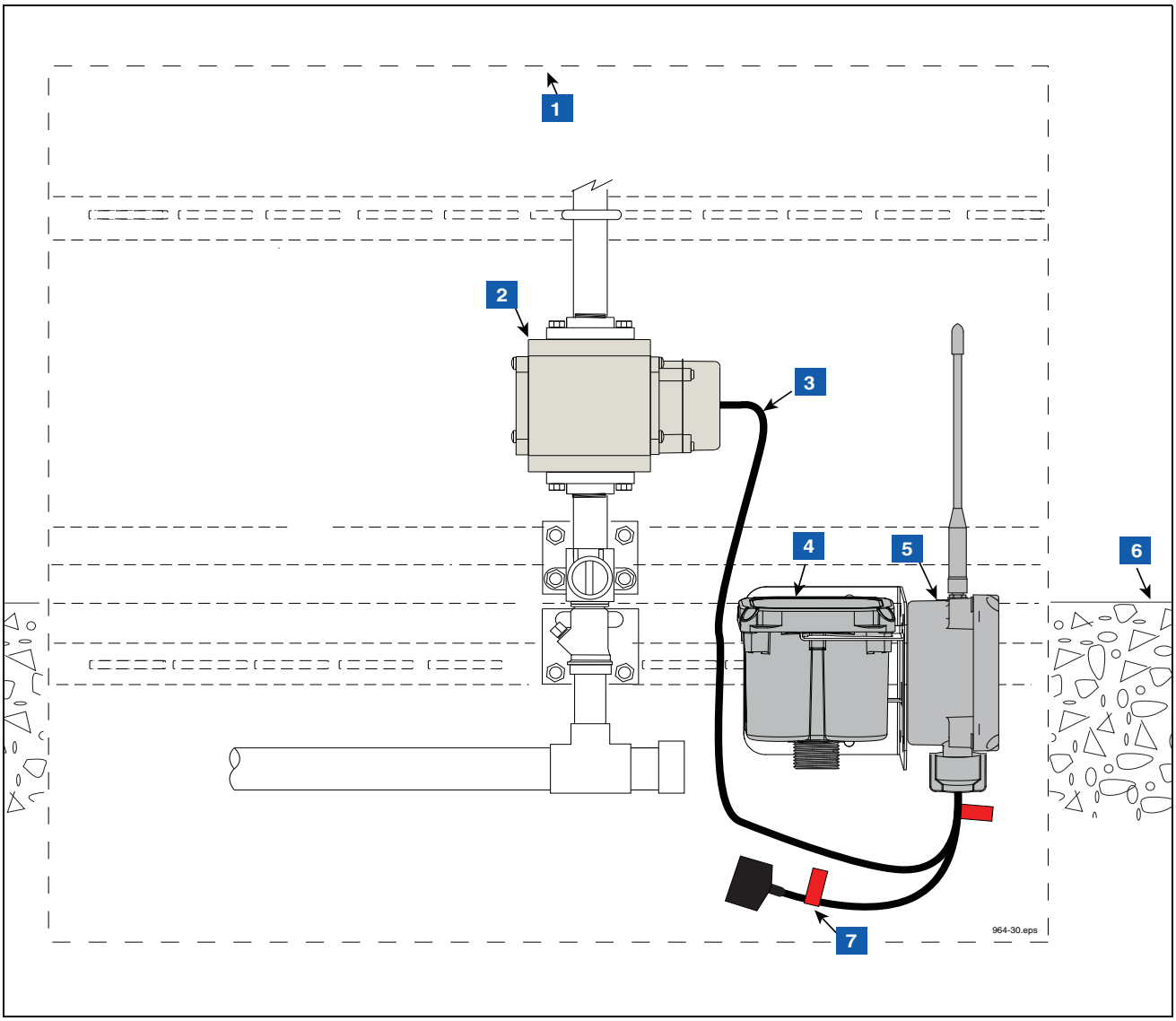

Figure 14. Example VFM Transmitter Installation In Dispenser

LEGEND FOR NUMBERED BOXES IN Figure 14	
1. Base of dispenser cabinet	5. Transmitter
2. VFM	6. top of dispenser pedestal
3. VFM cable	7. Battery caution label attached to battery cable (2 places)
4. Battery pack	

Vapor Return Pressure Sensor Installation

VENT STACK INSTALLATION EXAMPLE

1. A Transmitter/battery pack pair must be installed with the Veeder-Root Vapor Return Pressure Sensor (VRPS) in the Universal Enclosure and mounted on the vent stack (see Figure 15).
2. Install the VRPS sensor in the Universal Enclosure following instructions accompanying the sensor. During the installation, all required National, State and local safety codes must be followed.
3. Using two #10 taptite screws from the Universal Enclosure kit, attach the Transmitter housing to the side of the L bracket from the Universal Enclosure kit - do not attach L bracket/transmitter assembly to the back mounting surface at this time.
4. Get the battery pack mounting bracket from the Universal Enclosure kit and put the threaded connector fitting of the battery housing through the large hole in the bracket.
5. Get the thin hex nut from the kit and screw it onto the battery housing cable connector threaded fitting until snug (see item 4 in Figure 16).
6. Attach the battery housing/bracket assembly to the back mounting surface of the Universal Enclosure using two #10 taptite screws from the kit (see item 5 in Figure 16).
7. Connect the VRPS and battery cables to the VRPS transmitter as described in the section below entitled “Connecting Cables To The Transmitter” on page 27, then attach the transmitter/L bracket assembly to the back mounting surface using two #10 taptite screws from the kit.

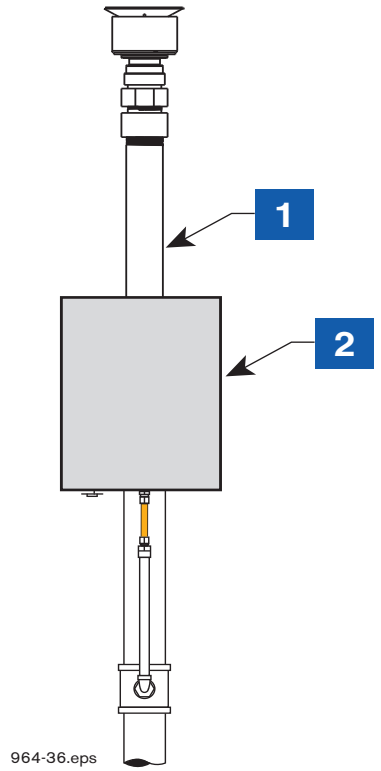

Figure 15. VRPS Mounted In Universal Enclosure On The Vent Stack

LEGEND FOR NUMBERED BOXES IN Figure 15	
1. Vent stack	2. VRPS sensor, wireless transmitter/battery in Universal Enclosure

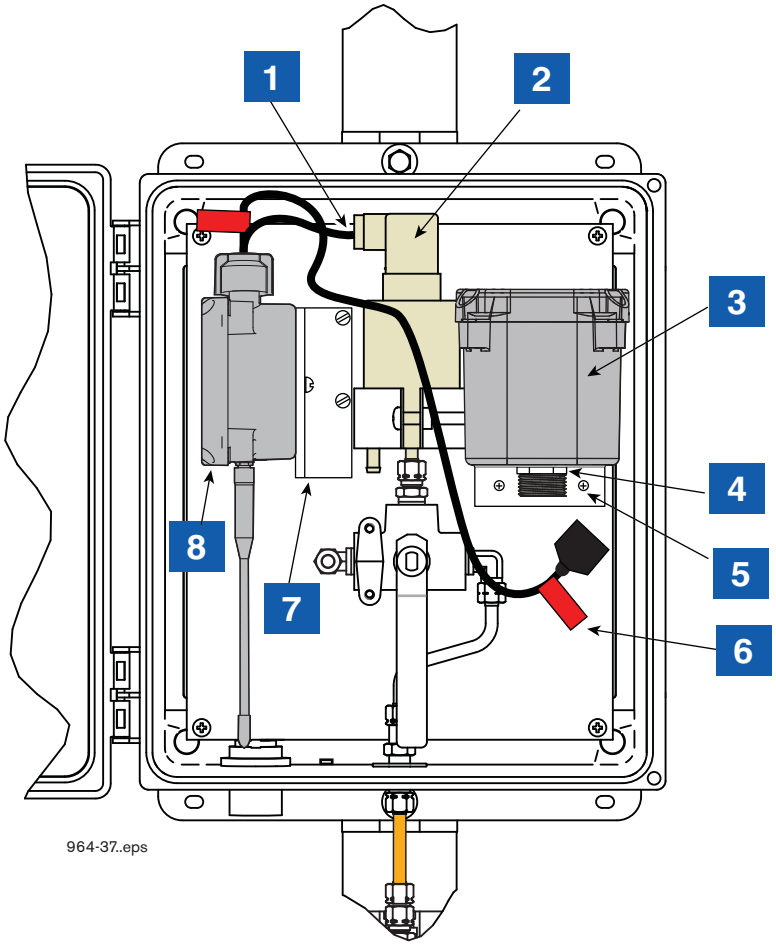

Figure 16. Example VRPS Transmitter/battery Pack Installation In The Universal Enclosure

LEGEND FOR NUMBERED BOXES IN Figure 16	
1. VRPS cable	5. Attach Battery L bracket using two #10 taptite screws
2. VRPS	6. Battery caution label attached to battery cable (2 places)
3. Battery pack	7. Attach Transmitter L bracket using two #10 taptite screws
4. Thin hex nut	8. Transmitter

Connecting Cables To The Transmitter

Note: The dip switches in each transmitter must be set to the proper dip switch settings listed in Appendix B. If the dip switches are set incorrectly, this device will fail to operate properly.

1. Using a #15 torx driver, remove the cover of the Transmitter.
2. Make sure the battery/DC power cable is not connected to the battery pack (item 7 in Figure 14) or dc power source at this time.

WARNING! To prevent ignition of flammable or combustible atmosphere disconnect power before servicing.

3. Remove the nut from the probe/sensor cable cord grip (left side cord grip) and slide it over the non-connector end of the probe/sensor cable. Push the end of the cable into the Transmitter.
4. Strip back cable jacket and wires as shown in Figure 17.
5. All probe/sensor cables connect to the PROBE terminal block the SAME WAY - the white wire to the PWR terminal and the black wire to the GND terminal as shown in Figure 18.

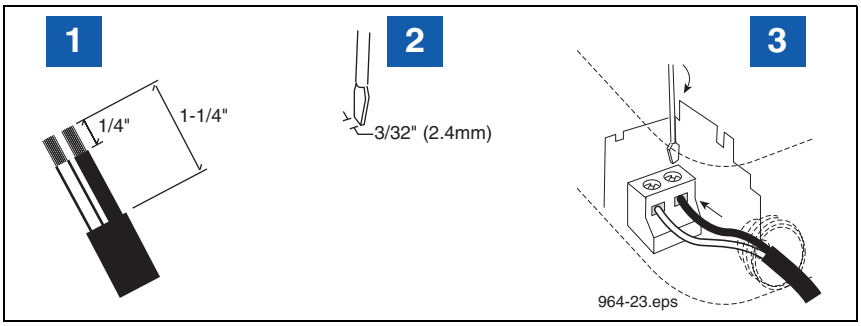

Figure 17. Connecting Input Wiring To Transmitter Terminal Blocks

LEGEND FOR NUMBERED BOXES IN Figure 17	
1. Strip back cable and wire jackets the amount shown.	3. Both wires must be tight in terminals!
2. Use a screwdriver with the proper blade width.	

6. Remove the nut from the power cable cord grip (right side cord grip) and slide it over the non-connector end of the power cable. Push the end of the cable into the Transmitter.
7. Strip back cable jacket and wires as shown in Figure 17.
8. Connect power cable wires to the BATTERY terminal block placing the white wire in the +IN terminal and the black wire in the –IN terminal as shown in Figure 18.
9. **Hand tighten both cable entry cord grip nuts to prevent water entry!**

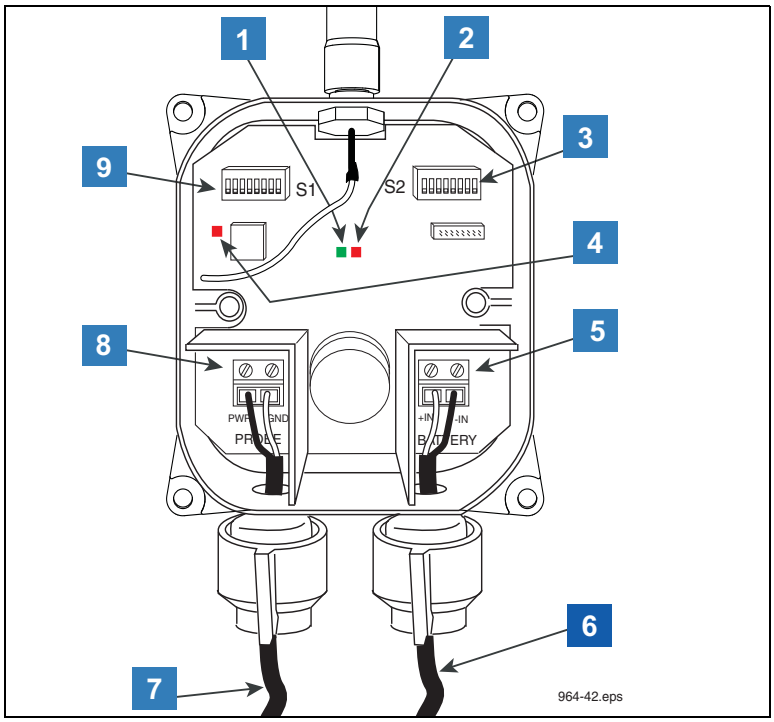

Figure 18. Wiring The Transmitter

LEGEND FOR NUMBERED BOXES IN Figure 18

1. Green LED – Unit status.
2. Red LED – Radio status.
3. S2 DIP switch.
4. Red LED – Flashes only when radio is powered on in Diagnostic Mode.
5. BATTERY power-in terminals (+IN and –IN). Observe polarity!
6. Cable from battery or DC power source.
7. Cable from probe/sensor.
8. PROBE input terminals (PWR and GND). OBSERVE POLARITY!
9. S1 DIP switch.

Pay close attention to the polarity of the battery input connections. Reversing the connections can cause damage to the TLS RF.

10. To assure a water-tight seal between the cover and the enclosure, follow these steps:
    a. Insert the four cover screws through the cover and then press on the retaining washers to hold the screws in place.
    b. Make sure that the cover gasket is free of dirt and debris on both sides of the gasket and that the inside of the cover is clean in the gasket area.
    c. Position the gasket into the cover groove, assuring that it is pressed fully into the groove and sitting completely flat.
    d. Assemble the cover onto the enclosure, tightening the screws in a couple of turns each. Using an alternating ‘X’ pattern, continue to tighten the screws until they are all tight.
11. If you haven’t done so already, attach the red battery labels from the installation kit onto the power cable below the power cord grip and at the battery pack connector or DC power source.
12. Do not attach the power cable at the battery pack or dc power source until ready to begin the “Site Startup Procedure”.

Receiver Installation

1. One Receiver is required per site and it is mounted in the vertical position (antenna up) on the outer wall of the same building housing the TLS RF. The Receiver is attached to its mounting bracket with #10 x 1/2" taptite screws from its install kit (see Figure 19). The L-bracket is then mounted on the outer wall of the building using appropriate fasteners (customer supplied). If the Receiver will be exposed to the weather, attach the L-bracket to the mounting surface inside a weatherproof enclosure. This enclosure is not required when mounting the Receiver under a roof overhang and shielded from the weather.

   NOTE: When locating the mounting position, keep in mind that the RS-485 cable connecting the Receiver to the TLS RF must be less than 250 feet in length. Avoid placing the Receiver near motors (e.g., power roof vents), fluorescent lighting (min. 1 foot separation), pumps, welders.

   Locate the Receiver on the same side of the building as the transmitters. If additional transmitters are either too far away or on the opposite side of the building, the Repeater can be located either on a structure near the remote transmitter(s) or on the opposite side of the building facing those transmitter(s) - see Repeater installation.

The Receiver is only suitable for use in a non-hazardous location.

2. Run the RS-485 cable (Belden #3107A or equiv.) from the TLS RF through the building's wall to the Receiver. Caulk the cable where it passes through wall openings. Use cable clamps at appropriate intervals to secure the cable to the walls.
3. Note that the Receiver cover label indicates the cord grip to be used for the RS-485 cable from the TLS RF and the cable to the Repeater (if used). Remove the cover of the Receiver and set it aside.
4. Set S1 and S2 DIP settings as desired (ref. Appendix B, Figure B-2). NOTE: set all dip switches prior to attaching the TLS RF RS-485 cable as the dip switches are only read during power up.
5. Slide the nut over the cable. Choose the correct size bushing and slide it over the cable. Dress the cable jacket according to the dimensions in Figure 17. Insert the cable into the appropriate opening at the bottom of the housing. Insert each wire into the appropriate terminal and tighten. Leave a small amount of slack in each wire. Slide the bushing into the bottom of the housing. Hand tighten the nut.
6. Note that there are two twisted pair color-coded wires in the cable (e.g., a white with blue stripe and blue with white stripe pair and a white with orange strip and orange with white stripe pair). One of the pairs is for RS-485 communication (- & + terminals) and the other pair is for Receiver power (+15 Vdc & Gnd). Using Figure 20 as a guide, attach the wires of the two twisted pairs to the RS-485 terminals.

   Record which wire attaches to each terminal to help you attach the other end of that wire to the identically marked terminal in the TLS RF.

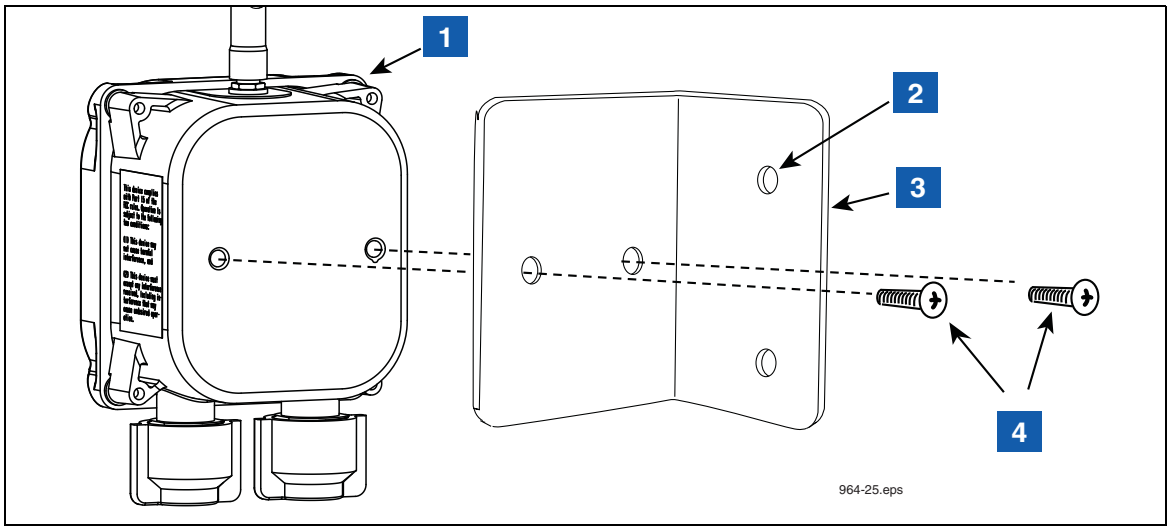

Figure 19. Attaching Mounting Bracket To Receiver Or Repeater

LEGEND FOR NUMBERED BOXES IN Figure 19	
1. Receiver or Repeater	4. #10 x 1/2" taptite screws
2. 0.280" diameter hole (2) – mount this narrow side of bracket to wall or post	
3. Mounting bracket.	

7. Referring to your connection notes in step 5 above, connect the other end of the RS-485 cable to the RS-485 terminal block in the TLS RF (ref. Figure 7 on page 16).
8. If a Repeater is used and powered by the Receiver, push the two wire power cable (to Repeater) through the +15 Vdc cord grip of the Receiver (item 7 in Figure 20).
9. Slide the nut over the cable. Choose the correct size bushing and slide it over the cable. Dress the cable jacket according to the dimensions in Figure 17. Insert the cable into the appropriate opening at the bottom of the housing. Insert each wire into the appropriate terminal and tighten. Leave a small amount of slack in each wire. Slide the bushing into the bottom of the housing. Hand tighten the nut.
10. Attach the dc power cable (white to +15 Vdc and black to GND) to the Repeater terminal block (item 9 in Figure 20).
11. **Hand tighten both cable entry cord grip nuts to prevent water entry!**
12. To assure a water-tight seal between the cover and the enclosure, follow these steps:
    a. Insert the four cover screws through the cover and then press on the retaining washers to hold the screws in place.
    b. Make sure that the cover gasket is free of dirt and debris on both sides of the gasket and that the inside of the cover is clean in the gasket area.
    c. Position the gasket into the cover groove, assuring that it is pressed fully into the groove and sitting completely flat.
    d. Assemble the cover onto the enclosure, tightening the screws in a couple of turns each. Using an alternating 'X' pattern, continue to tighten the screws until they are all tight.

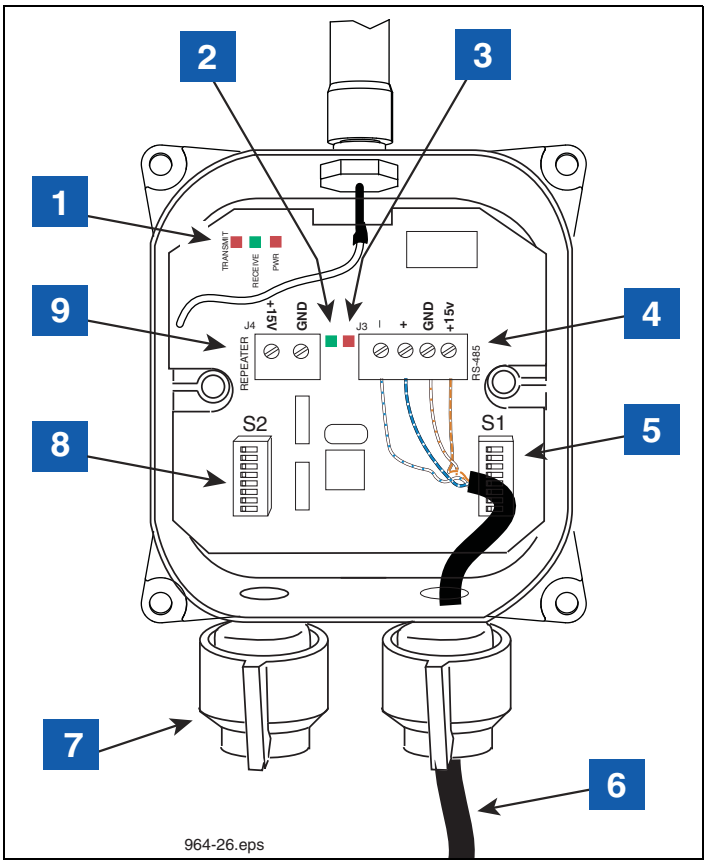

Figure 20. Wiring The Receiver

LEGEND FOR NUMBERED BOXES IN Figure 20

1. RS-485 Comm Activity:
   - XMIT (Red) LED – flashes when message transmitted to TLS-RF
   - RCV (Green) LED – flashes when message received from TLS-RF
   - PWR (Red) LED – Receiver power on indicator
2. Green LED – Unit status
3. Red LED – Radio status
4. Connect the color pairs of the RS-485/power cable to the same RS-485 terminals in both the Receiver and the master TLS RF (ref. "Connecting RS-485 Wiring" on page 17).
5. S1 DIP switch
6. RS-485 cable - Maximum cable length is 500 feet if a communication grade cable is used.
7. A solid bushing must be installed to seal the Receiver when this cord grip is unused. In sites where a Repeater is powered from the Receiver, the Repeater's power cable enters through this cord grip and attaches to the Repeater terminal block (item 9).

HAND TIGHTEN BOTH CABLE ENTRY CORD GRIP NUTS TO PREVENT WATER ENTRY!

8. S2 DIP switch
9. +15 Vdc power source for the Repeater. If used, connect two wires from item 9 connector in Receiver to item 7 connector in Repeater, see Figure 21.

Pay close attention to the polarity of the +15 Vdc and GND wires used as Repeater power source. Reversing these connections can cause damage to the TLS RF.

Repeater Installation

1. Use of a single repeater is optional but may improve system performance when installed correctly. The Repeater should be located closer to the device transmitters to rebroadcast messages to the Receiver. Use the 15 Vdc power source provided in the Receiver to power the Repeater, or use a customer supplied non-interruptible, Class 2, 15 Vdc power source. The most common method of powering the Repeater power is to use the Repeater power terminal block J4 in the Receiver (see item 9 in Figure 20).

   When device transmitters are on the opposite side of the building from the Receiver, the Repeater should be mounted on the side of the building facing those transmitters. Mount the Repeater with its transmitter antenna in the up or vertical orientation.

2. The Repeater is attached to its mounting bracket with #10 x 1/2" taptite screws from its install kit (ref. Figure 19 on page 30). The L-bracket is then attached to the outer wall of the building using appropriate fasteners (customer supplied). If the Repeater will be exposed to the weather, attach the L-bracket to the mounting surface inside a weatherproof enclosure. This enclosure is not required when mounting the Repeater under a roof overhang and shielded from the weather.

The Repeater is only suitable for use in a non-hazardous location.

3. Set S1 and S2 as desired (refer to Appendix B). NOTE: set all dip switches prior to connecting the +15 Vdc power cable as the dip switches are only read during power up.

4. Note the cover of the Repeater indicates the cord grip to be used for the cable connecting the Repeater to its dc power source (item 5 in Figure 21). Remove the cover of the Repeater and set it aside.

5. Slide the nut over the cable. Choose the correct size bushing and slide it over the cable. Dress the cable jacket according to the dimensions in Figure 17. Insert the cable into the appropriate opening at the bottom of the housing. Insert each wire into the appropriate terminal and tighten. Leave a small amount of slack in each wire. Slide the bushing into the bottom of the housing. Hand tighten the nut.

6. Connect the 2-wire dc power cable to the Repeater terminal block, white to +15 Vdc and black to GND (see item 7 in Figure 21).

7. **Hand tighten both cable entry cord grip nuts to prevent water entry!**

8. To assure a water-tight seal between the cover and the enclosure, follow these steps:

   a. Insert the four cover screws through the cover and then press on the retaining washers to hold the screws in place.

   b. Make sure that the cover gasket is free of dirt and debris on both sides of the gasket and that the inside of the cover is clean in the gasket area.

   c. Position the gasket into the cover groove, assuring that it is pressed fully into the groove and sitting completely flat.

   d. Assemble the cover onto the enclosure, tightening the screws in a couple of turns each. Using an alternating 'X' pattern, continue to tighten the screws until they are all tight.

9. The other end of the Repeater's dc power cable connects to the Receiver's +15 Vdc output terminal (ref. item 9 in Figure 20), or to a non-interruptible, Class 2, 15 Vdc power source.

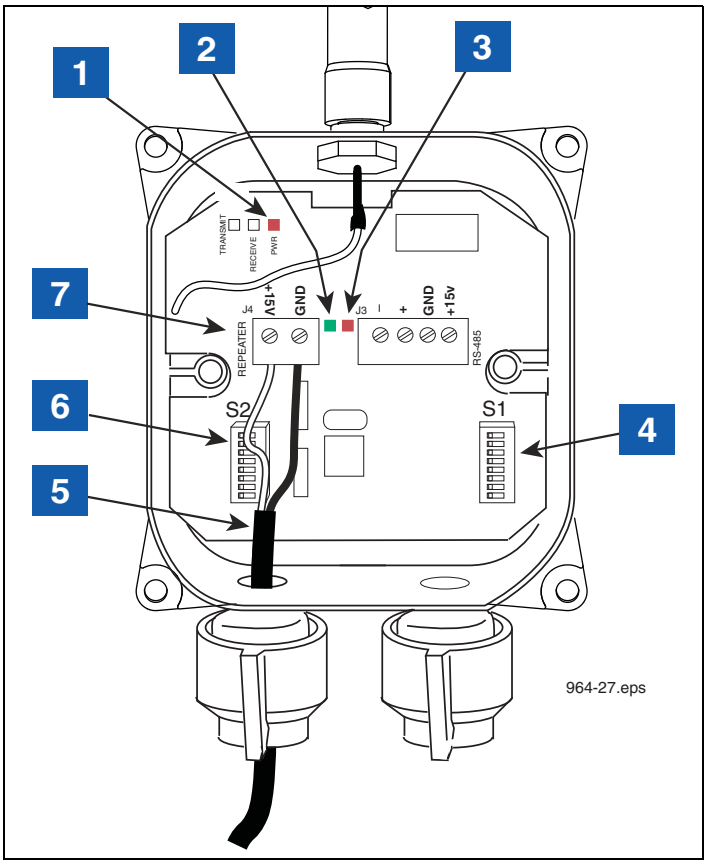

Figure 21. Wiring The Repeater

LEGEND FOR NUMBERED BOXES IN Figure 21	
1. Red LED – on when power is applied.	6. S2 DIP switch
2. Green LED – Unit status	7. DC power input terminals - +15 Vdc and ground
3. Red LED – Radio status	**Pay close attention to the polarity of the +15 Vdc and GND wires from the Receiver or DC power source. Reversing these connections can cause damage to the TLS RF.**
4. S1 DIP switch	
5. DC Power input cable (from Receiver [item 9 connector - see Figure 20], or dc power source)	

Network Setup

Hardware Overview

An example TLS RF Wireless System site network illustrating a 32 Transmitter configuration is shown in Figure 22. The maximum number of Transmitters permissible in a site is 32 (requires 4 TLS RFs).

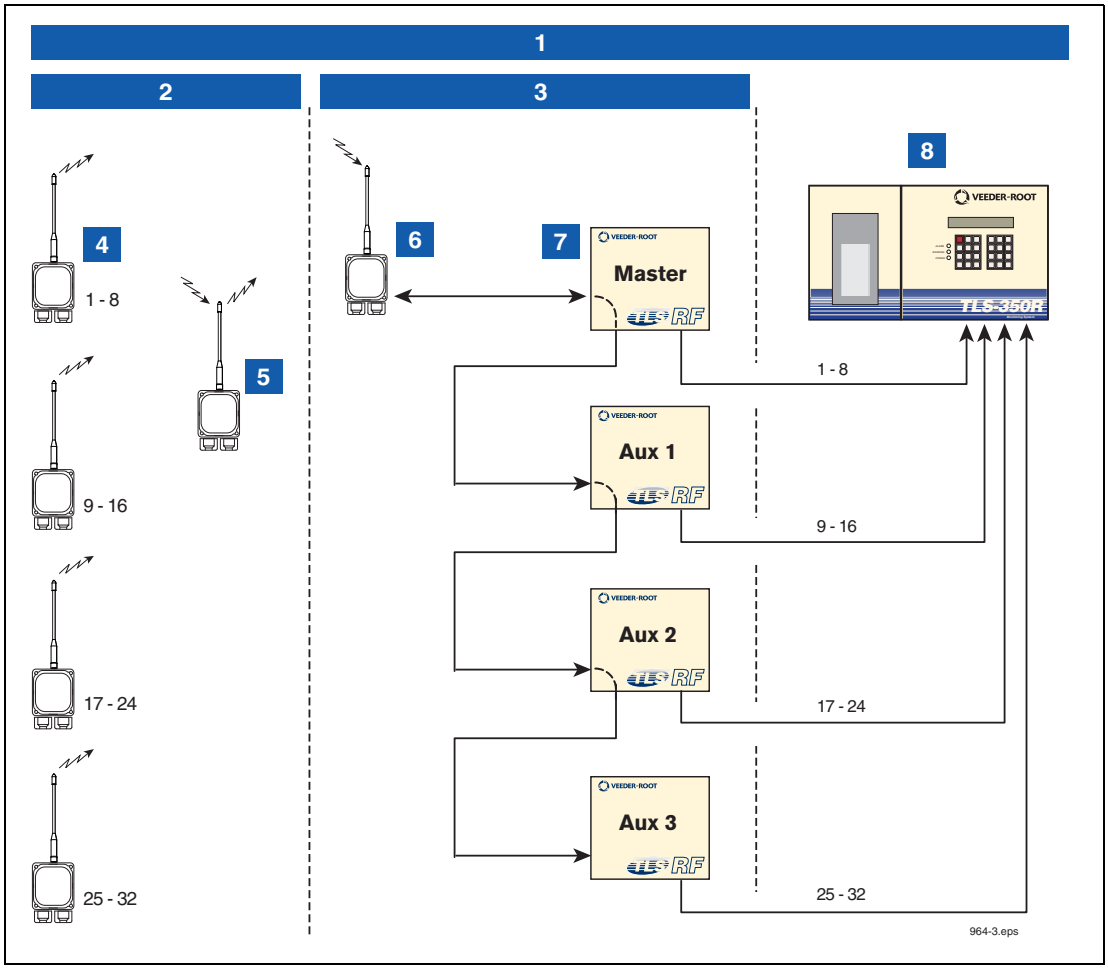

Figure 22. Example Site Network Diagram

LEGEND FOR NUMBERED BOXES IN Figure 22

1. Site Network
2. Wireless network
3. VR bus
4. Transmitters
5. Repeater
6. Receiver
7. TLS RF, one required per 8 Transmitters
8. TLS console

Identifying Devices in the TLS RF Wireless Site Network

The Site ID must be identical for all Transmitters, the Repeater, and the Receiver in the site's wireless network. Each Transmitter in the site's wireless network must have a unique Device Number (from 1 – 32). Each TLS RF in the site's network must have a unique Device Number (Master at 0 and Auxiliaries at1, 2, and/or 3).

All Device Numbers are entered using DIP switches located in each device and are entered in each device before it is installed.

Making up a site network worksheet before actually setting device DIP switches or connecting signal wires will help prevent mistakes when entering Site IDs/Device Numbers or making wiring connections between the TLS RF(s) and the TLS console.

Entering Device Numbers for the Site Network

TRANSMITTER DEVICE NUMBER

Each of the transmitters must have a unique Device Number (1 – 32). Enter this number by setting DIP switches 4 – 8 on S1 (see Figure 18 on page 28) in the 'off' position or 'on' position as shown below.

Device Number	S1 DIP Switch Settings					Device Number	S1 DIP Switch Settings				
	4	5	6	7	8		4	5	6	7	8
1	off	off	off	off	on	**17**	on	off	off	off	on
2	off	off	off	on	off	**18**	on	off	off	on	off
3	off	off	off	on	on	**19**	on	off	off	on	on
4	off	off	on	off	off	**20**	on	off	on	off	off
5	off	off	on	off	on	**21**	on	off	on	off	on
6	off	off	on	on	off	**22**	on	off	on	on	off
7	off	off	on	on	on	**23**	on	off	on	on	on
8	off	on	off	off	off	**24**	on	on	off	off	off
9	off	on	off	off	on	**25**	on	on	off	off	on
10	off	on	off	on	off	**26**	on	on	off	on	off
11	off	on	off	on	on	**27**	on	on	off	on	on
12	off	on	on	off	off	**28**	on	on	on	off	off
13	off	on	on	off	on	**29**	on	on	on	off	on
14	off	on	on	on	off	**30**	on	on	on	on	off
15	off	on	on	on	on	**31**	on	on	on	on	on
16	on	off	off	off	off	**32**	off	off	off	off	off

964-43.eps

TLS RF DEVICE NUMBER

Each TLS RF in the site network must have a unique Device Number (0 – 3). You must select 0 if it is the only TLS RF in the site, or if it is the TLS RF in a site with multiple TLS RFs that is monitoring the first Device Set (transmitters 1 – 8). You would enter a 1 for the TLS RF monitoring the second Device Number (transmitters 9 – 16), etc. The site's receiver must also be connected to the TLS RF having Device Number '0'. The factory default setting is '0'.

Enter this number by setting DIP switches 1 and 2 on S2 (see Figure 12 on page 21) in the 'off' position or 'on' position as shown below.

Transmitter Device Number	TLS RF Device Number	S2 DIP switch Settings		TLS RF
		1	2	
1-8	**0**	off	off	Master
9-16	**1**	off	on	AUX 1
17-24	**2**	on	off	AUX 2
25-32	**3**	on	on	AUX 3

964-48.eps

Entering the Site ID Number

All of the site's Transmitters, Repeater and Receiver must have the same Site ID number (0 – 15) entered in S2 DIP switches 5 - 8 (see settings below). The TLS RF does not require a Site ID. The factory default Site ID number for all components is set to 0.

NOTE: You must change the factory set Site ID when another site is nearby. Adjoining sites will experience data reception 'crosstalk' if both are left at the same number.

Site ID Number	S2 DIP switch Settings				Site ID Number	S2 DIP switch Settings			
	5	6	7	8		5	6	7	8
0	off	off	off	off	**8**	on	off	off	off
1	off	off	off	on	**9**	on	off	off	on
2	off	off	on	off	**10**	on	off	on	off
3	off	off	on	on	**11**	on	off	on	on
4	off	on	off	off	**12**	on	on	off	off
5	off	on	off	on	**13**	on	on	off	on
6	off	on	on	off	**14**	on	on	on	off
7	off	on	on	on	**15**	on	on	on	on

964-49.eps

Site Startup Procedure

Depending on the site layout, it is permissible to install RF devices in a variety of locations including dispensers and containment sumps. After all the wireless equipment has been installed, follow the steps below to verify the final setup. For transmitters installed in Dispensers, do not close the dispenser's cover after installing the Transmitter in case signal strength is a problem. Close the dispenser's cover only after the Transmitter passes a second verification process.

1. Turn on power to the TLS RF(s) and leave the covers open.
2. Go to the first Transmitter and connect the power cable to its power source.
3. At the TLS RF you should see one of the 8 red LEDs flashing (item 5 in Figure 12). This is an indication the transmission from the Transmitter is being received. If it is, go to Step 2a. If one of the 8 LEDs is not flashing go to Step 2b.
   a. Go back to the Transmitter, and if applicable, replace the dispenser's cover. Return to the TLS RF and verify that the same LED is still flashing.
      i. If it is, disconnect the battery cable from the battery pack and repeat Step 1 on the next Transmitter.
      ii. If it is not, the Receiver is not picking up the Transmitter's signal. Go back to the Transmitter; remove the dispenser's cover, reorient the antenna or lower the Transmitter, then go back to the TLS RF to verify that the same LED is flashing.
      iii. If reorienting the antenna or moving the Transmitter doesn't help, disconnect the battery cable from the battery pack and make a note that the signal is not being received at this particular dispenser.
      iv. Repeat Step 1 with the next Transmitter.
   b. If applicable, go back to the dispenser, remove the Transmitter's cover; the green LED (item 2 in Figure 5) should be flashing indicating that the sensor is being read. If the green LED is not flashing, check the sensor cable's wiring connections. If the wiring is correct, check Site ID. If it is correct, it means either the Transmitter is bad or there is a problem with the sensor, disconnect the battery cable from the battery pack and continue to Step 1 with the next Transmitter.
4. After verifying that each Transmitter is being received at the TLS RF(s), go around to each Transmitter; reconnect the Transmitters' battery cable to the battery pack. Replace dispenser's cover as appropriate. Go to the TLS console and configure all site sensors. Check for any comm alarms. If none are observed, the startup is complete.

NOTE: If some Transmitters are not being received at the TLS RF, relocating the Receiver and/or the Repeater may improve reception.

Initial TLS Console Setup Procedure

CAUTION! Failure to follow your applicable startup procedure will result in the probes/sensors not being recognized.

- **Sites with a New TLS-450/, TLS4 or TLS-XB Only**
  1. Power up all wireless devices.
  2. Power up the TLS RF console and wait about 5 minutes.
  3. Power up the TLS-450 console and wait 5 minutes until the device 'Discover Mode' is Complete.
- **Sites with all Other TLS Consoles**
  1. Power up all wireless devices
  2. Power up both the TLS and TLS RF consoles.

Diagnostics

Alarms

During normal operation when the TLS Console and monitored PMC and ISD System are functioning properly and no warning or alarm conditions exist, the “ALL FUNCTIONS NORMAL” message will appear in the system status area of the console display. Regardless of the TLS Console in use at this site, record the software part number as well as the software revision.

There is an additional alarm, Battery Status (TLS-350 only), when wireless equipment is used in place of wires. ISD, PMC and Smart Sensor warnings and alarm are the same. If a warning or alarm condition occurs as a result of a failure in the wireless communication hardware the system displays the communication failure for the effected Smart Sensor. If more than one condition exists, the display will alternately flash the appropriate messages. The system automatically prints an alarm report showing the warning or alarm type, its location and the date and time the warning or alarm condition occurred.

Any break in link between transmitter and sensor, or between TLS and TLS RF results in Communication Alarm. All other alarms related to individual sensor types, such as sensor fault alarm, are supported as they are with a wired system. When the Sensor Transmitter has determined the communication with the RF box has failed it will command the Vapor Valve to close. The valve will remain closed until an open command is sent (from the TLS) after communication is reestablished.

Battery Diagnostics

You can get the battery status from the TLS-350 (with software Version 30A or higher). The battery status is displayed for the wireless sensors, from the Smart Sensor Diagnostics (see Figure 23). The wireless sensors’s battery status can also be printed from that screen.

The battery status for the wireless sensors is reported as Full, Medium, Low or Replace.

- Full: greater than or equal to 3.4 Volts
- Medium Range: 3.2V to 3.4 Volts
- Low range: 3.0V to 3.2V
- Replace: Below 3.0V

When the Smart Sensor battery reports a status ‘Replace’ continuously for 24 hours, a Smart Sensor warning will be posted on the TLS to alert the operator that the battery requires replacement. The warning will persist in the TLS until the battery reports ‘Medium’ or ‘Full’. The alarm will clear at that time. This is a low priority TLS warning which will sound the beeper, flash the yellow warning light, post on the two line display, print on the printer and be recorded in the non-priority alarm history. The warning can be accessed remotely and be reported remotely similar to all TLS warnings and alarms. This warning will not appear in the ISD or PMC reports (only sensor failures are recorded in the ISD and PMC reports).

WIRELESS SENSOR DIAGNOSTIC MENU (TLS-350 CONSOLES)

The Battery Status for all wireless Smart Sensors will be displayed in the menu after the Serial Number (see Figure 23).

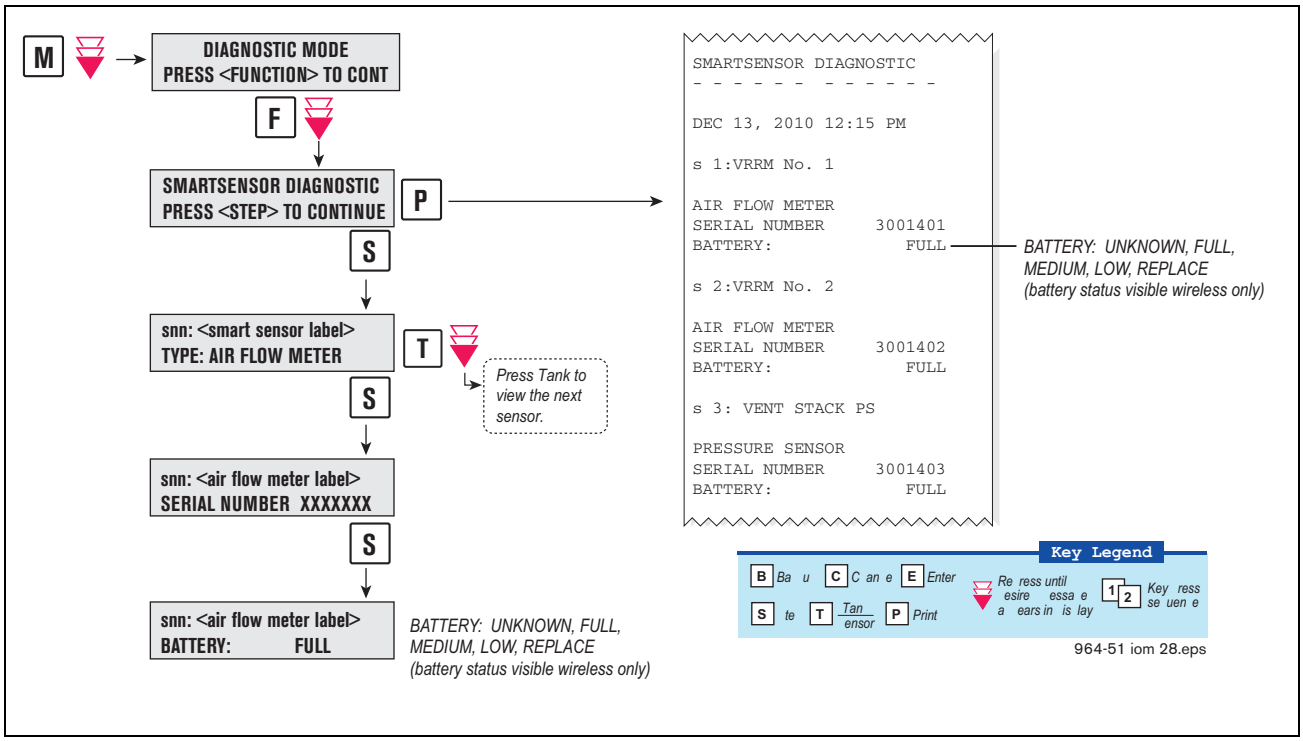

Figure 23. Device Battery Status In TLS-350 SmartSensor Diagnostic Menu

Appendix A: Regulatory Information

Federal Communications Commission Notice

This equipment has been tested and found to comply with the limits for a Class B digital device, pursuant to Part 15 of the FCC Rules. These limits are designed to provide reasonable protection against harmful interference in a residential installation. This equipment generates, uses, and can radiate radio frequency energy and, if not installed and used in accordance with the instructions, may cause harmful interference to radio communications. However, there is no guarantee that interference will not occur in a particular installation. If this equipment does cause harmful interference to radio or television reception, which can be determined by turning the equipment off and on, the user is encouraged to try to correct the interference by one or more of the following measures:

- Reorient or relocate the receiving antenna
- Increase the separation between the equipment and receiver
- Connect the equipment into an outlet on a circuit different from that to which the receiver is connected
- Consult the dealer or an experienced radio or television technician for help.

MODIFICATIONS

The FCC requires the user to be notified that any changes or modifications made to this device that are not expressly approved by Veeder-Root Company may void the authority to operate the equipment.

CABLES

Connections to this device must be made with shielded cables with metallic RFI/EMI connector hoods in order to maintain compliance with FCC Rules and Regulations.

DECLARATION OF CONFORMITY FOR PRODUCTS MARKED WITH THE FCC LOGO–UNITED STATES ONLY

This device complies with Part 15 of the FCC Rules. Operation is subject to the following two conditions: (1) this device may not cause harmful interference, and (2) this device must accept any interference received, including interference that may cause undesired operation.

For questions regarding your product, contact:

Veeder-Root Company

125 Powder Forest Drive

Simsbury, CT 06070

Or, call 1-800-323-1799

For questions regarding this FCC declaration, contact:

Veeder-Root Company

125 Powder Forest Drive

Simsbury, CT 06070

Or, call 1-800-323-1799

To identify this product, refer to the Part, Series, or Model number found on the product.

Canadian Notice

This Class B digital apparatus meets all requirements of the Canadian Interference-Causing Equipment Regulations.

AVIS CANADIEN

Cet appareil numérique de la classe B respecte toutes les exigences du Règlement sur le matériel brouilleur du Canada.

Battery Warning

WARNING: The TLS RF Wireless System Battery Pack contains lithium batteries. To reduce the risk of fire or burns, do not disassemble, crush, puncture, short external contacts, or dispose of in fire or water.

Because of the type of batteries used in TLS RF Wireless System, follow local regulations regarding the safe disposal of the battery. Consult Appendix D of this manual for more information on battery disposal.

Wireless Notices

In some environments, the use of wireless devices may be restricted. Such restrictions may apply aboard airplanes, in hospitals, near explosives, in hazardous locations, etc. If you are uncertain of the policy that applies to the use of this device, please ask for authorization to use it prior to turning it on.

U.S. Regulatory Wireless Notice

WARNING: Exposure to Radio Frequency Radiation. The radiated output power of this device is below the FCC radio frequency exposure limits. Nevertheless, the device should be used in such a manner that the potential for human contact during normal operation is minimized. To avoid the possibility of exceeding the FCC radio frequency exposure limits, human proximity to the antenna should be minimized.

Canadian Regulatory Wireless Notice

Operation is subject to the following two conditions: (1) this device may not cause interference, and (2) this device must accept any interference, including interference that may cause undesired operation of the device. The term “IC:” before the certification/registration number only signifies that the Industry Canada technical specifications were met.

System Specifications

Note: Not all models described are available in all regions.

Appendix B: Device DIP Switch Settings

TLS RF Number Settings

The Dip Switch Locations to set the unique Device number for the TLS RF(s) are shown in the Figure B-1. The TLS RF that monitors the Receiver and Transmitter IDs 1 - 8 is considered the site's master TLS RF and must have its Device ID set to 0 (default).

CAUTION: Setting the Device Timeout delay to less than 10 minutes may result in Device Out errors since the transmitter's transmit time intervals are programmable and may have been set to a value greater than the Device Timeout you set here.

TLS RF

Device Timeout
(Time to Comm alarm)

Sw Pos	Delay
0	5 m
1	10 m (default)
2	15 m
3	20 m
4	30 m
5	45 m
6	60 m
7	90 m
8	2 h
9	3 h
A	4 h
B	6 h
C	8 h
D	12 h
E	18 h
F	24 h

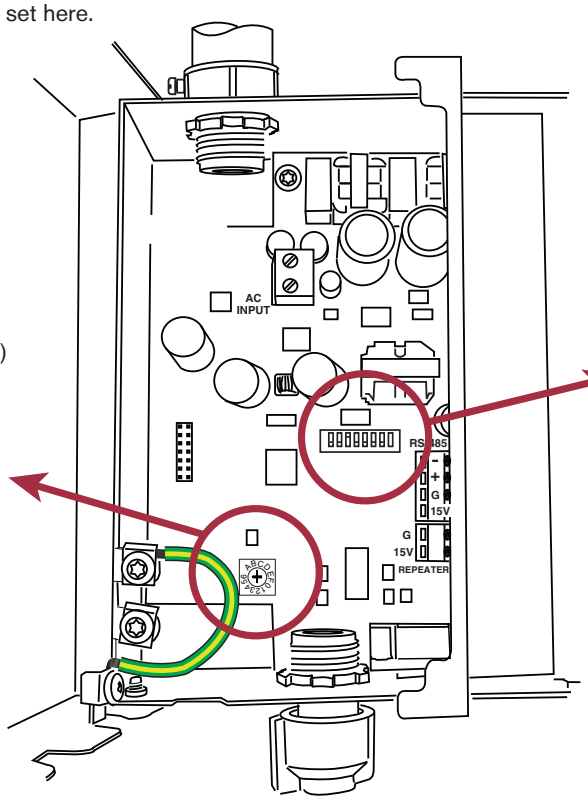

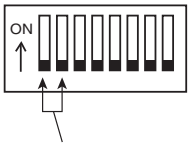

TLS RF Device ID
0 = Master

Device ID	Sw1	Sw2	Transmitter IDs
0 (Master)	off	off	1 - 8
1 (Aux 1)	off	on	9 - 16
2 (Aux 2)	on	off	17 - 24
3 (Aux 3)	on	on	25 - 32

964 b-1arb.eps

Figure B-1. TLS-RF switch settings

Transmitter/Receiver/Repeater DIP Switch Settings

DIP switch locations for the Transmitter, Receiver and Repeater are shown in Figure B-2. Device DIP switch settings for these devices are listed in Figure B-3 through Figure B-6 (use the appropriate settings for your software version 1 or 3).

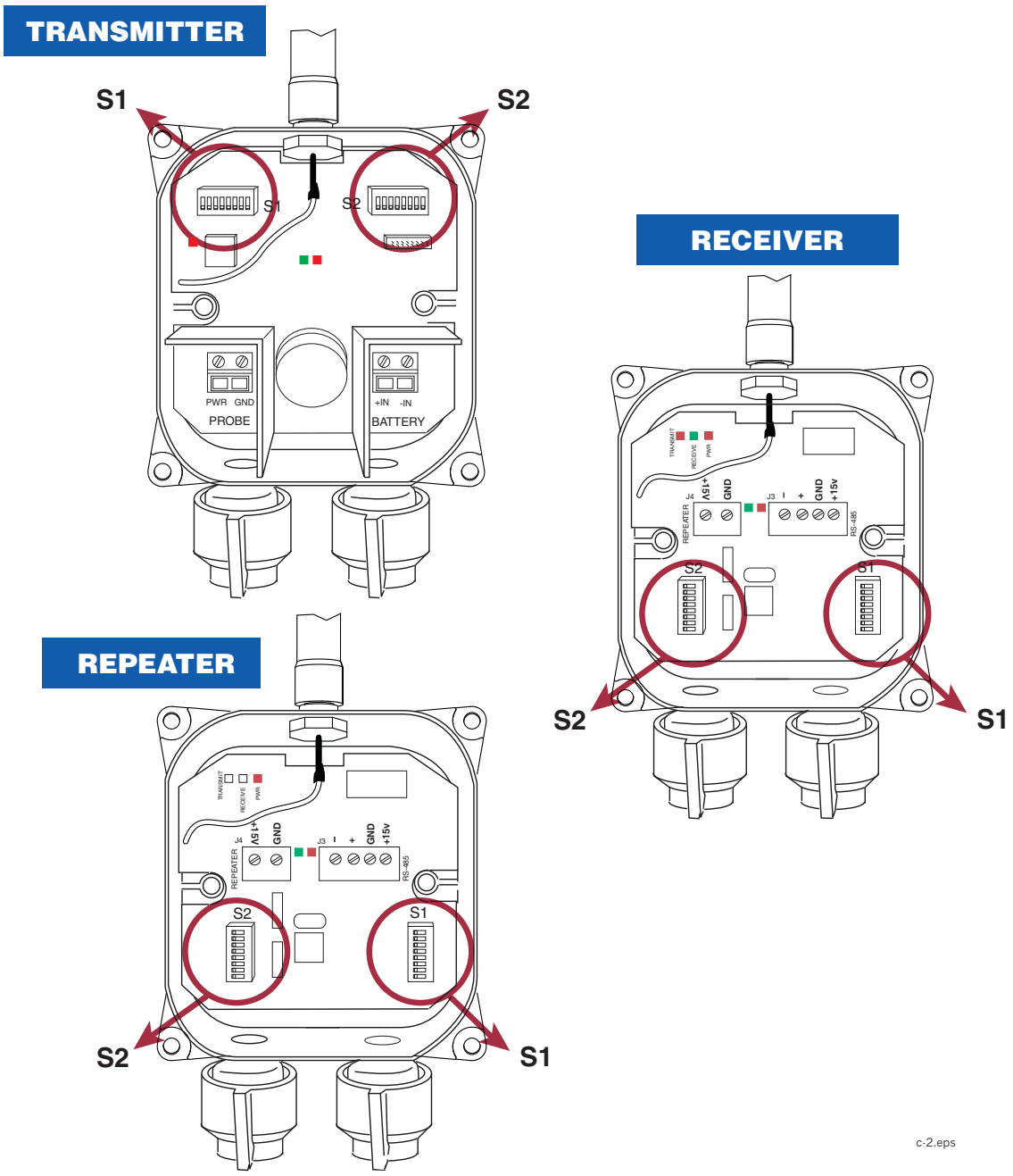

Figure B-2. DIP switch settings

All Wireless 2 (W2) Transmitters			
S1: Positions			Function
1	2	3	
OFF	OFF	OFF	Enable Transmitter

c-3.eps

Figure B-3. S1: DIP switch positions 1-3 — (W2) All Devices

All Wireless 2 (W2) Transmitters							
S1: Positions					TRANSMITTER		
4	5	6	7	8	Device Number		
OFF	OFF	OFF	OFF	ON	1 (Master TLS-RF Device 1)	Master TLS RF	
OFF	OFF	OFF	ON	OFF	2 (Master TLS-RF Device 2)	Connects to	
OFF	OFF	OFF	ON	ON	3 (Master TLS-RF Device 3)	Receiver	
OFF	OFF	ON	OFF	OFF	4 (Master TLS-RF Device 4)		
OFF	OFF	ON	OFF	ON	5 (Master TLS-RF Device 5)		
OFF	OFF	ON	ON	OFF	6 (Master TLS-RF Device 6)		
OFF	OFF	ON	ON	ON	7 (Master TLS-RF Device 7)		
OFF	ON	OFF	OFF	OFF	8 (Master TLS-RF Device 8)		
OFF	ON	OFF	OFF	ON	9 (Aux 1 TLS-RF Device 1)	Aux 1 is the second	
OFF	ON	OFF	ON	OFF	10 (Aux 1 TLS-RF Device 2)	TLS RF Console	
OFF	ON	OFF	ON	ON	11 (Aux 1 TLS-RF Device 3)		
OFF	ON	ON	OFF	OFF	12 (Aux 1 TLS-RF Device 4)		
OFF	ON	ON	OFF	ON	13 (Aux 1 TLS-RF Device 5)		
OFF	ON	ON	ON	OFF	14 (Aux 1 TLS-RF Device 6)		
OFF	ON	ON	ON	ON	15 (Aux 1 TLS-RF Device 7)		
ON	OFF	OFF	OFF	OFF	16 (Aux 1 TLS-RF Device 8)		
ON	OFF	OFF	OFF	ON	17 (Aux 2 TLS-RF Device 1)	Aux 2 is the third	
ON	OFF	OFF	ON	OFF	18 (Aux 2 TLS-RF Device 2)	TLS RF Console	
ON	OFF	OFF	ON	ON	19 (Aux 2 TLS-RF Device 3)		
ON	OFF	ON	OFF	OFF	20 (Aux 2 TLS-RF Device 4)		
ON	OFF	ON	OFF	ON	21 (Aux 2 TLS-RF Device 5)		
ON	OFF	ON	ON	OFF	22 (Aux 2 TLS-RF Device 6)		
ON	OFF	ON	ON	ON	23 (Aux 2 TLS-RF Device 7)		
ON	ON	OFF	OFF	OFF	24 (Aux 2 TLS-RF Device 8)		
ON	ON	OFF	OFF	ON	25 (Aux 3 TLS-RF Device 1)	Aux 3 is the fourth	
ON	ON	OFF	ON	OFF	26 (Aux 3 TLS-RF Device 2)	TLS RF Console	
ON	ON	OFF	ON	ON	27 (Aux 3 TLS-RF Device 3)		
ON	ON	ON	OFF	OFF	28 (Aux 3 TLS-RF Device 4)		
ON	ON	ON	OFF	ON	29 (Aux 3 TLS-RF Device 5)		
ON	ON	ON	ON	OFF	30 (Aux 3 TLS-RF Device 6)		
ON	ON	ON	ON	ON	31 (Aux 3 TLS-RF Device 7)		
OFF	OFF	OFF	OFF	OFF	32 (Aux 3 TLS-RF Device 8)		

c-4.eps

Figure B-4. S1: DIP switch positions 4-8 — (W2) All Devices

Wireless 2 (W2) Vapor Flowmeter					
S2: Positions				Transmitter Interval in Seconds	
1	2	3	4	Read	TX
* → OFF	ON	OFF	OFF	32	32

c-9.eps

* = Required settings

Figure B-5. S2: DIP switch positions 1-4 – (W2) Vapor Flow Meter

Wireless 2 (W2) Transmitters, Receiver and Repeater (All Site ID settings must be the same)						
S2: Positions				TRANSMITTER	REPEATER[1]	RECEIVER[1]
5	6	7	8	Site ID	Site ID	Site ID
OFF	OFF	OFF	OFF	0	0	0
OFF	OFF	OFF	ON	1	1	1
OFF	OFF	ON	OFF	2	2	2
OFF	OFF	ON	ON	3	3	3
OFF	ON	OFF	OFF	4	4	4
OFF	ON	OFF	ON	5	5	5
OFF	ON	ON	OFF	6	6	6
OFF	ON	ON	ON	7	7	7
ON	OFF	OFF	OFF	8	8	8
ON	OFF	OFF	ON	9	9	9
ON	OFF	ON	OFF	10	10	10
ON	OFF	ON	ON	11	11	11
ON	ON	OFF	OFF	12	12	12
ON	ON	OFF	ON	13	13	13
ON	ON	ON	OFF	14	14	14
ON	ON	ON	ON	15	15	15

c-10.eps

[1] Set all remaining dip switches (S2 1-4 and S1 1-8) to OFF for both the Repeater and Receiver.

Figure B-6. S2: DIP switch positions 5-8 – (W2) All Devices

Appendix C: Lithium Battery Safety Data

This appendix contains the manufacturer supplied Transportation Certificate and Material Safety Data Sheet for the lithium batteries used in the TLS RF Wireless 2 (W2) System.

Lithium Battery Disposal Considerations

1. Waste disposal must be in accordance with the applicable regulations.
2. Disposal of the Lithium batteries should be performed by permitted, professional disposal firms knowledgeable in Federal, State or Local requirements of hazardous waste treatment and hazardous waste transportation.
3. Incineration should never be performed by battery users, but by trained professionals in an authorized facility with proper gas and fume containment.
4. Recycling of battery can be done in authorized facility, through licensed waste carrier.

TRANSPORTATION CERTIFICATE

Ref. TC-LS 33600 11/2008- 87

This is to certify that the Saft cell type, **LS 33600,** has been subjected and has met the requirements of the UN Recommendations on the Transport of Dangerous Goods, Part III, sub-section 38.3, Manual of Tests and Criteria, 4th Revised edition - 2003 - Ref. ST/SG/AC.10/11/Rev. 4), as detailed in Saft-Poitiers internal reports P 0256/03, dated 06/2003.

Concerned Part Numbers

All the part numbers relative to single LS 33600 cells, whatever their finish mode (with and without end-tabs or wiring and connector assemblies, etc.)

Product Description

Primary (non-rechargeable), Lithium-Thionyl Chloride ($Li\text{-}SOCl_2$) D-sized single cell

Nominal Voltage	3.6 Volts
Nominal Capacity	17.0 Ah
Lithium metal content	4.5 grams
Nominal energy	17.0 x 3.6 = 61.2 Wh
Maximum recommended continuous discharge current	250 mA

Product Classification

Worldwide, besides the United States of America
Since it passes the UN-defined transport tests but because its lithium content is above the 1 gram limit, **the LS 33600 individual cell, in all of its finish versions, according to the current UN Recommendations on the Transport of Dangerous Goods - Model regulations, is declared non-exempt from the Dangerous Goods Regulations. It is restricted to transport/ assigned to Class 9**, and must be packed in accordance with the relevant packing instructions of the applicable Handbooks and Codes issued by the bodies (IATA-ICAO, IMO, ADR, US-DOT, etc.) in charge of regulating the transportation of dangerous goods.

Within the United States of America
The U.S. DOT CFR 49 Regulations, Parts 171, 172, 173 and 175, are governing the transportation of lithium cells and batteries. Special Provision 188 (in Part 172.102) **defines the LS 33600 single lithium metal cell, in all of its finished versions, as belonging to the *"medium primary lithium cell"* category,** and details the requirements to be met for the different transportation conditions.

Signed on Behalf of Saft, Specialty Battery Group

Pascal Hans	SBG Quality Manager		dated 23/11/08
Alain Kerouanton	SBG Lithium Product Manager		dated 23/11/2008

Specialty Battery Group – Rue Georges Leclanché BP 1039 – 86060 Poitiers Cedex 09 – France

Material/Product Safety Data Sheet
(MSDS-PSDS)

LS/LSG/LSH/LST/LSX products	Lithium/Thionyl chloride single cells and multi-cell battery packs
Revision 8 Date 10/2008	

1. Identification of the Substance or Preparation and Company

Product	Primary Lithium/Thionyl chloride unit cells and multi-cell battery packs ($Li\text{-}SOCl_2$)			
Production sites	Saft Ltd. River Drive Tyne & Wear South Shields NE33 2TR – UK Ph. :+44 191 456 1451 Fax :+44 191 456 6383	Saft Rue Georges Leclanché BP 1039 86060 Poitiers cedex 9 France Ph. :+33 (0)5 49 55 48 48 Fax :+33 (0)5 49 55 48 50	Saft America Inc 313 Crescent Street Valdese NC 28690 – USA Ph. :+1 828 874 4111 Fax :+1 828 874 2431	Saft Batteries Co., Ltd Zhuhai Free Trade Zone Lianfeng Road Zhuhai 519030 Guangdong Province China Ph. : +86 756 881 9318 Fax : +86 756 881 9328
www.saftbatteries.com (section « Contact »)				
Emergency contact Within the USA	+1 (703) 527 3887 +1 (800) 494 9300	(CHEMTREC US Service Center)		

2. Hazards Identification

Do not short circuit, recharge puncture, incinerate, crush, immerse, force discharge or expose to temperatures above the declared operating temperature range of product. Risk of fire or explosion.

The Lithium-Thionyl chloride batteries described in this Safety Data Sheet are sealed units which are not hazardous when used according to the recommendations of the manufacturer.

Under normal conditions of use, the electrode materials and liquid electrolyte they contain are not exposed to the outside, provided the battery integrity is maintained and seals remain intact. Risk of exposure only in case of abuse (mechanical, thermal, electrical) which leads to the activation of safety valves and/or the rupture of the battery container. Electrolyte leakage, electrode materials reaction with moisture/water or battery vent/explosion/fire may follow, depending upon the circumstances.

3. Composition & Information on Ingredients

Ingredient	Content	CAS No.	CHIP Classification		
Lithium *(Li)*	3,5-5%	7439-93-2			**F**; R14/15 **C**; R34 R14/15, R21,R22, R35, R41, R43 S2, S8, S45
Thionyl chloride *($SOCl_2$)*	40-46%	7719-09-7	 		**C;** R14, R21, R22, R35, R37, R41,R42/43 S2, S8, S24, S26, S36, S37, S45

Aluminum chloride anhydrous *($AlCl_3$)*	1-5%	7446-70-0			R14, R22, R37, R41, R43. S2, S8, S22, S24, S26, S36, S45
Carbon *(C_n)*	3-4%	1333-86-4			NONE KNOWN
Amount varies depending on cell size.					

4. First Aid Measures	
Inhalation	Remove from exposure, rest and keep warm. In severe cases obtain medical attention.
Skin contact	Wash off skin thoroughly with water. Remove contaminated clothing and wash before reuse. In severe cases obtain medical attention.
Eye contact	Irrigate thoroughly with water for at least 15 minutes. Obtain medical attention.
Ingestion	Wash out mouth thoroughly with water and give plenty of water to drink. Obtain medical attention.
Further treatment	All cases of eye contamination, persistent skin irritation and casualties who have swallowed this substance or been affected by breathing its vapours should be seen by a doctor.

5. Fire Fighting Measures	
CO_2 extinguishers or, even preferably, copious quantities of water or water-based foam, can be used to cool down burning Li-$SOCl_2$ cells and batteries, as long as the extent of the fire has not progressed to the point that the lithium metal they contain is exposed (marked by deep red flames). Do not use for this purpose sand, dry powder or soda ash , graphite powder or fire blankets. **Use only metal (Class D) extinguishers on raw lithium.**	
Extinguishing media	Use water or CO_2 on burning Li-$SOCl_2$ cells or batteries and class D fire extinguishing agent only on raw lithium.

6. Accidental Release Measures
Remove personnel from area until fumes dissipate. Do not breathe vapours or touch liquid with bare hands. If the skin has come into contact with the electrolyte, it should be washed thoroughly with water. Sand or earth should be used to absorb any exuded material. Seal leaking battery and contaminated absorbent material in plastic bag and dispose of as Special Waste in accordance with local regulations.

7. Handling and Storage	
Handling	Do not crush, pierce, short (+) and (-) battery terminals with conductive (i.e. metal) goods. Do not directly heat or solder. Do not throw into fire. Do not mix batteries of different types and brands. Do not mix new and used batteries. Keep batteries in non conductive (i.e. plastic) trays.
Storage	Store in a cool (preferably below 30°C) and ventilated area, away from moisture, sources of heat, open flames, food and drink. Keep adequate clearance between walls and batteries. Temperature above 100°C may result in battery leakage and rupture. Since short circuit can cause burn, leakage and rupture hazard, keep batteries in original packaging until use and do not jumble them.
Other	Lithium-Thionyl chloride batteries are not rechargeable and should not be tentatively charged. Follow Manufacturers recommendations regarding maximum recommended currents and operating temperature range. Applying pressure on deforming the battery may lead to disassembly followed by eye, skin and throat irritation.

8. Exposure Controls & Personal Protection					
Occupational exposure standard		Compound	8hr TWA	15min TWA	SK
		Sulfur dioxide	1 ppm	1 ppm	-
		Hydrogen chloride	1 ppm	5 ppm	-
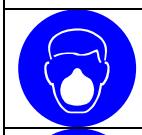	**Respiratory protection**	In all fire situations, use self-contained breathing apparatus.			
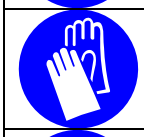	**Hand protection**	In the event of leakage wear gloves.			
	Eye protection	Safety glasses are recommended during handling.			
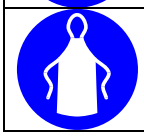	**Other**	In the event of leakage, wear chemical apron.			

9. Physical and Chemical Properties	
Appearance	Cylindrical or prismatic shape
Odour	If leaking, gives off a pungent corrosive odour.
pH	Not Applicable
Flash point	Not applicable unless individual components exposed
Flammability	Not applicable unless individual components exposed
Relative density	Not applicable unless individual components exposed
Solubility (water)	Not applicable unless individual components exposed
Solubility (other)	Not applicable unless individual components exposed

10. Stability and Reactivity	
Product is stable under conditions described in Section 7.	
Conditions to avoid.	Heat above 100°C (150°C for the LSH 20-150 cells and the battery packs assembled from them) or incinerate. Deform. Mutilate. Crush. Pierce. Disassemble Recharge. Short circuit. Expose over a long period to humid conditions.
Materials to avoid	Oxidising agents, alkalis, water. Avoid electrolyte contact with aluminum or zinc.
Hazardous decomposition Products	Hydrogen (H_2) as well as Lithium oxide (Li_2O) and Lithium hydroxide (LiOH) dust is produced in case of reaction of *lithium metal* with water. Chlorine (Cl_2), Sulfur dioxide (SO_2) and Disulfur dichloride (S_2Cl_2) are produced in case of thermal decomposition of *thionyl chloride* above 140°C. Hydrochloric acid (HCl) and Sulfur dioxide (SO_2) are produced in case of reaction of *Thionyl chloride* with water at room temperature. Hydrochloric acid (HCl) fumes, Lithium oxide, (Li_2O), Lithium hydroxide (LiOH) and Aluminum hydroxide ($Al(OH)_3$) dust are produced in case of reaction of *Lithium tetrachloroaluminate ($LiAlCl_4$)* with water.

11. Toxicological Information	
Signs & symptoms	None, unless battery ruptures. In the event of exposure to internal contents, corrosive fumes will be very irritating to skin, eyes and mucous membranes. Overexposure can cause symptoms of non-fibrotic lung injury and membrane irritation.
Inhalation	Lung irritant.
Skin contact	Skin irritant
Eye contact	Eye irritant.
Ingestion	Tissue damage to throat and gastro-respiratory tract if swallowed.
Medical conditions generally aggravated by exposure	In the event of exposure to internal contents, eczema, skin allergies, lung injuries, asthma and other respiratory disorders may occur.

12. Ecological Information	
Mammalian effects	None known if used/disposed of correctly.
Eco-toxicity	None known if used/disposed of correctly.
Bioaccumulation potential	None known if used/disposed of correctly.
Environmental fate	None known if used/disposed of correctly.

13. Disposal Considerations
Do not incinerate, or subject cells to temperatures in excess of 100°C. Such abuse can result in loss of seal, leakage, and/or cell explosion. Dispose of in accordance with appropriate local regulations.

MSDS Li-$SOCl_2$
Rev. 8 October 2008

14. Transport Information	
Label for conveyance	For the single cell batteries and multi-cell battery packs that are non-restricted to transport (non-assigned to the Miscellaneous Class 9), use lithium batteries inside label. For the single cell batteries and multi-cell battery packs which are restricted to transport (assigned to Class 9), use Class 9 Miscellaneous Dangerous Goods and UN Identification Number labels. In all cases, refer to the product transport certificate issued by the Manufacturer.
UN numbers	UN3090 (shipment of cells and batteries *in bulk*) UN 3091 (cells and batteries *contained in equipment* or *packed with it*)
Shipping names	Lithium Metal Batteries
Hazard classification	Depending on their lithium metal content, some single cells and small multi-cell battery packs may be non- assigned to Class 9 (Refer to Transport Certificate)
Packing group	II
Specific dispositions	IATA: A45, A88, A99, P968, P969, P970 IMDG: 188, 230, 310, P903 ADR/RID: 188, 230, 310, 636, P903, P903a
IMDG Code	3090 (Li Batteries) 3091 (Li Batteries contained in equipment or packed with it)
CAS	
EmS No.	F-A, S-I
Marine pollutant	No
ADR Class	Class9

15. Regulatory Information			
Risk phrases	Lithium *(Li)*	R14/15 R21 R22 R35 R41 R42/43	Reacts violently with water, liberating extremely flammable gases. Harmful in contact with skin. Harmful if swallowed. Causes burns. Risk of serious damage to eye. May cause sensitization by inhalation and skin contact.
	Thionyl chloride *($SOCl_2$)*	R14 R22 R35 R37 R41 R42/43	Reacts with water. Harmful if swallowed. Causes burns. Irritating to respiratory system. Risk of serious damage to eye. May cause sensitization by inhalation and skin contact.
	Aluminum chloride anhydrous *($AlCl_3$)*	R14 R22 R37 R41 R43	Reacts with water. Harmful if swallowed. Irritating to respiratory system. Risk of serious damage to eye. May cause sensitization by skin contact.
Safety phrases	Lithium *(Li)*	S2 S8 S45	Keep out of reach of children Keep away from moisture In case of incident, seek medical attention.
	Thionyl chloride *($SOCl_2$)*	S2 S8 S24 S26 S36 S37 S45	Keep out of reach of children. Keep away from moisture. Avoid contact with skin. In case of contact with eyes, rinse immediately with plenty of water. Wear suitable protective clothing. Wear suitable gloves. In case of incident, seek medical attention.

MSDS Li-$SOCl_2$
Rev. 8 October 2008

	Aluminum chloride anhydrous *($AlCl_3$)*	S2 S8 S22 S24 S26 S36	Keep out of reach of children. Keep away from moisture. Do not breathe dust. Avoid contact with skin. In case of contact with eyes, rinse immediately with plenty of water. Wear suitable protective clothing.
UK regulatory references	Classified under CHIP		

16. Other Information

This information has been compiled from sources considered to be dependable and is, to the best of our knowledge and belief, accurate and reliable as of the date compiled. However, no representation, warranty (either expressed or implied) or guarantee is made to the accuracy, reliability or completeness of the information contained herein.

This information relates to the specific materials designated and may not be valid for such material used in combination with any other materials or in any process. It is the user's responsibility to satisfy himself as to the suitability and completeness of this information for his particular use.

Saft does not accept liability for any loss or damage that may occur, whether direct, indirect, incidental or consequential, from the use of this information. Saft does not offer warranty against patent infringement.

Signature

Alain Kerouanton
Lithium Product Manager

MSDS Li-$SOCl_2$
Rev. 8 October 2008

VEEDER-ROOT

For technical support, sales or other assistance, please visit:
www.veeder.com