State of California
AIR RESOURCES BOARD

EXECUTIVE ORDER VR-203-C

Vapor Systems Technologies, Inc.
Phase II Enhanced Vapor Recovery (EVR) System
Not Including In-Station Diagnostics (ISD)

WHEREAS, the California Air Resources Board (ARB) has established, pursuant to California Health and Safety Code sections 25290.1.2, 39600, 39601 and 41954, certification procedures for systems designed for the control of gasoline vapor emissions during motor vehicle fueling operations (Phase II EVR vapor recovery systems) in its CP-201, ***Certification Procedure for Vapor Recovery Systems at Gasoline Dispensing Facilities*** (Certification Procedure) as last amended May 25, 2006, incorporated by reference in title 17, California Code of Regulations, section 94011;

WHEREAS, ARB has established, pursuant to California Health and Safety Code sections 39600, 39601, 39607, and 41954, test procedures for determining the compliance of Phase II vapor recovery systems with emission standards;

WHEREAS, Vapor Systems Technologies, Inc. (VST) requested certification of the VST Phase II Enhanced Vapor Recovery System Not Including In-Station Diagnostics (VST Phase II EVR System) pursuant to the Certification Procedure by Executive Order VR-203-A issued on November 5, 2007, and last modified on January 14, 2008, by Executive Order VR-203-B;

WHEREAS, the Certification Procedure provides that the ARB Executive Officer shall issue an Executive Order if he or she determines that the vapor recovery system conforms to all of the applicable requirements set forth in the Certification Procedure;

WHEREAS, G-01-032 delegates to the Chief of the Monitoring and Laboratory Division the authority to certify or approve modifications to certified Phase I and Phase II vapor recovery systems for gasoline dispensing facilities;

WHEREAS, I, William V. Loscutoff, Chief of the Monitoring and Laboratory Division, find that the VST Phase II EVR System conforms with all requirements set forth in the Certification Procedure, including compatibility when fueling vehicles equipped with onboard refueling vapor recovery systems, and results in a vapor recovery system which is at least 95 percent efficient and shall not exceed 0.38 pounds of hydrocarbons per 1,000 gallons of gasoline transferred when tested pursuant to TP-201.2, ***Efficiency and Emission Factor for Phase II Systems*** (October 8, 2003);

NOW, THEREFORE, IT IS HEREBY ORDERED that the VST Phase II EVR System is certified to be at least 95 percent efficient and does not exceed 0.38 pounds of hydrocarbon per 1,000 gallons of gasoline transferred in attended and/or self-service mode when used with an ARB-certified Phase I vapor recovery system and installed, operated, and maintained as specified herein and in the following exhibits. Exhibit 1 contains a list of the equipment certified for use with the VST Phase II EVR System. Exhibit 2 contains the performance standards, specifications, and typical installation drawings applicable to the VST Phase II EVR System as installed in a gasoline dispensing facility (GDF). Exhibit 3 contains the manufacturing performance standards and specifications. Exhibit 4 provides items required in conducting TP-201.3. Exhibit 5 is the liquid removal test procedure. Exhibit 6 is a hydrocarbon sensor verification test procedure. Exhibit 7 is the VST Phase II EVR System Warranty. Exhibit 8 is the vapor pressure sensor verification test procedure. Exhibit 9 is a test procedure for determining vapor processor activation pressure. Exhibit 10 is the nozzle bag test procedure.

IT IS FURTHER ORDERED that compliance with the applicable certification requirements, rules and regulations of the Division of Measurement Standards of the Department of Food and Agriculture, the Office of the State Fire Marshal of the Department of Forestry and Fire Protection, the Division of Occupational Safety and Health of the Department of Industrial Relations, and the Division of Water Quality of the State Water Resources Control Board are made conditions of this certification.

IT IS FURTHER ORDERED that VST shall provide a warranty for the vapor recovery system and components to the initial purchaser. The warranty shall be passed on to each subsequent purchaser within the warranty period. The manufacturer of components listed in Exhibit 1 not manufactured by VST shall provide a warranty to each of their components certified herein. The warranty shall include the ongoing compliance with all applicable performance standards and specifications and shall comply with all warranty requirements in Section 16.5 of the Certification Procedure. VST or other manufacturers may specify that the warranty is contingent upon the use of trained installers.

IT IS FURTHER ORDERED that every certified component manufactured by VST shall be performance tested by the manufacturer as provided in Exhibit 3.

IT IS FURTHER ORDERED that the certified VST Phase II EVR System shall be installed, operated, and maintained in accordance with the ***ARB Approved Installation, Operation, and Maintenance Manual***. A copy of this Executive Order and the ***ARB Approved Installation, Operation and Maintenance Manual*** shall be maintained at each GDF where a certified VST Phase II EVR System is installed.

IT IS FURTHER ORDERED that equipment listed in Exhibit 1, unless exempted, shall be clearly identified by a permanent identification showing the manufacturer's name, model number, and serial number. Within 60 days after the issuance of this Executive Order, VST shall provide a picture to ARB, in the format designated by the Executive Officer or Executive Officer Delegate, showing permanent identification of each component as listed in Exhibit 1.

IT IS FURTHER ORDERED that any alteration in the equipment parts, design, installation, or operation of the system certified hereby is prohibited and deemed inconsistent with this certification, unless the alteration has been submitted in writing and approved in writing by the Executive Officer or Executive Officer delegate.

IT IS FURTHER ORDERED that the following requirements are made a condition of certification. The owner or operator of the VST Phase II EVR System shall conduct and pass the following tests no later than 60 days after startup and at least once in each twelve month period, using the following test procedures: TP-201.3, ***Determination of 2 Inch WC Static Pressure Performance of Vapor Recovery Systems of Dispensing Facilities*** (March 17, 1999); TP-201.4, ***Dynamic Back Pressure*** (July 3, 2002) in accordance with the condition listed in item 1 of the Vapor Collection section of Exhibit 2; Exhibit 4, ***Required Items in Conducting TP-201.3***; Exhibit 5, ***Liquid Removal Test Procedure,*** Exhibit 6, ***Hydrocarbon Sensor Verification Test***, Exhibit 8, ***Vapor Pressure Sensor Verification Test****,* and Exhibit 9, ***Determination of VST Processor Activation Pressure.*** Shorter time periods may be specified in accordance with local district requirements. Notification of testing, and submittal of test results, shall be done in accordance with local district requirements and pursuant to policies established by that district. Alternative test procedures, including most recent versions of the test procedures listed above, may be used if determined by the ARB Executive Officer or Executive Officer delegate, in writing, to yield equivalent results.

IT IS FURTHER ORDERED that the following requirements are made a condition of certification. The owner or operator of the VST Phase II EVR System shall conduct, and pass, the following tests no later than 60 days after startup using the following test procedure: Exhibit 10, ***Nozzle Bag Test Procedure***. Notification of testing, and submittal of test results, shall be done in accordance with local district requirements and pursuant to the policies established by that district. Alternative test procedures, including most recent versions of the test procedures listed above, may be used if determined by the ARB Executive Officer or Executive Officer delegate, in writing, to yield equivalent results.

IT IS FURTHER ORDERED that, except as provided above, local districts at their option will specify the testing, related sequencing, and testing frequency of the nozzle vapor valves and VST Membrane Processor. If the district requires the nozzle vapor valve be tested, the test shall be conducted in accordance with Exhibit 10, ***Nozzle Bag Test Procedure***.

IT IS FURTHER ORDERED that the VST Phase II EVR System shall be compatible with gasoline in common use in California at the time of certification. The VST Phase II EVR System is not compatible with gasoline that has a methanol content greater than 5 percent, an ethanol content greater than 10 percent, or a methyl tert butyl ether (MTBE) content greater than 15 percent. Any modifications to comply with future California gasoline requirements shall be approved in writing by the Executive Officer or Executive Officer delegate.

IT IS FURTHER ORDERED that the certification of the VST Phase II EVR System is valid through December 1, 2011.

IT IS FURTHER ORDERED that Executive Order VR-203-B issued on January 14, 2008, is hereby superseded by this Executive Order. VST Phase II EVR Systems certified under Executive Order VR-203-A through B may remain in use at existing installations. This Executive Order shall apply to new installations or major modification of Phase II Systems with a throughput of less than or equal to 600,000 gallons per year. Use of this Executive Order for new installations or major modifications at a GDF with a throughput of more than 600,000 gallons per year is not authorized.

Executed at Sacramento, California, this 3rd day of July 2008.

William V. Loscutoff, Chief
Monitoring and Laboratory Division

Attachments:

Exhibit 1	Equipment List
Exhibit 2	System Specifications
Exhibit 3	VST Manufacturing Performance Standards and Specifications
Exhibit 4	Required Items in Conducting TP-201.3
Exhibit 5	Liquid Removal Test Procedure
Exhibit 6	Hydrocarbon Sensor Verification Test
Exhibit 7	VST Phase II EVR System Warranty
Exhibit 8	Vapor Pressure Sensor Verification Test
Exhibit 9	Determination of VST Processor Activation Pressure
Exhibit 10	Nozzle Bag Test Procedure

Executive Order VR-203-C
VST Phase II EVR System

Exhibit 1
Equipment List

Component	Manufacturer/ Model
Nozzle	VST Model VST-EVR-NB (Figure 1A-1) VST Model VST-EVR-NB-R (Rebuilt)
Coaxial Curb Hose	VST Model VDV-EVR Series (Figure 1A-2)
Coaxial Whip Hose	VST Model VSTA-EVR Series (Figure 1A-2)
Breakaway Coupling	VST Model VSTA-EVR-SBK (Figure 1A-2)
Membrane Processor	VST Model VST-ECS-CS3-XXX (Figure 1A-3) where XXX represents motor phase and HC Sensor -110 Single-Phase with HC Sensor -310 Three-Phase with HC Sensor
Pressure Management Control (PMC)	Veeder-Root TLS-350 Series
PMC Software Version Number	1.01
PMC Pressure Sensor	Veeder-Root 331946-001
Smart Sensor Interface Module	Veeder-Root 329356-004
Multiport Card	Veeder-Root 331944-000

Figure 1A-1
Model VST-EVR- NB Nozzle

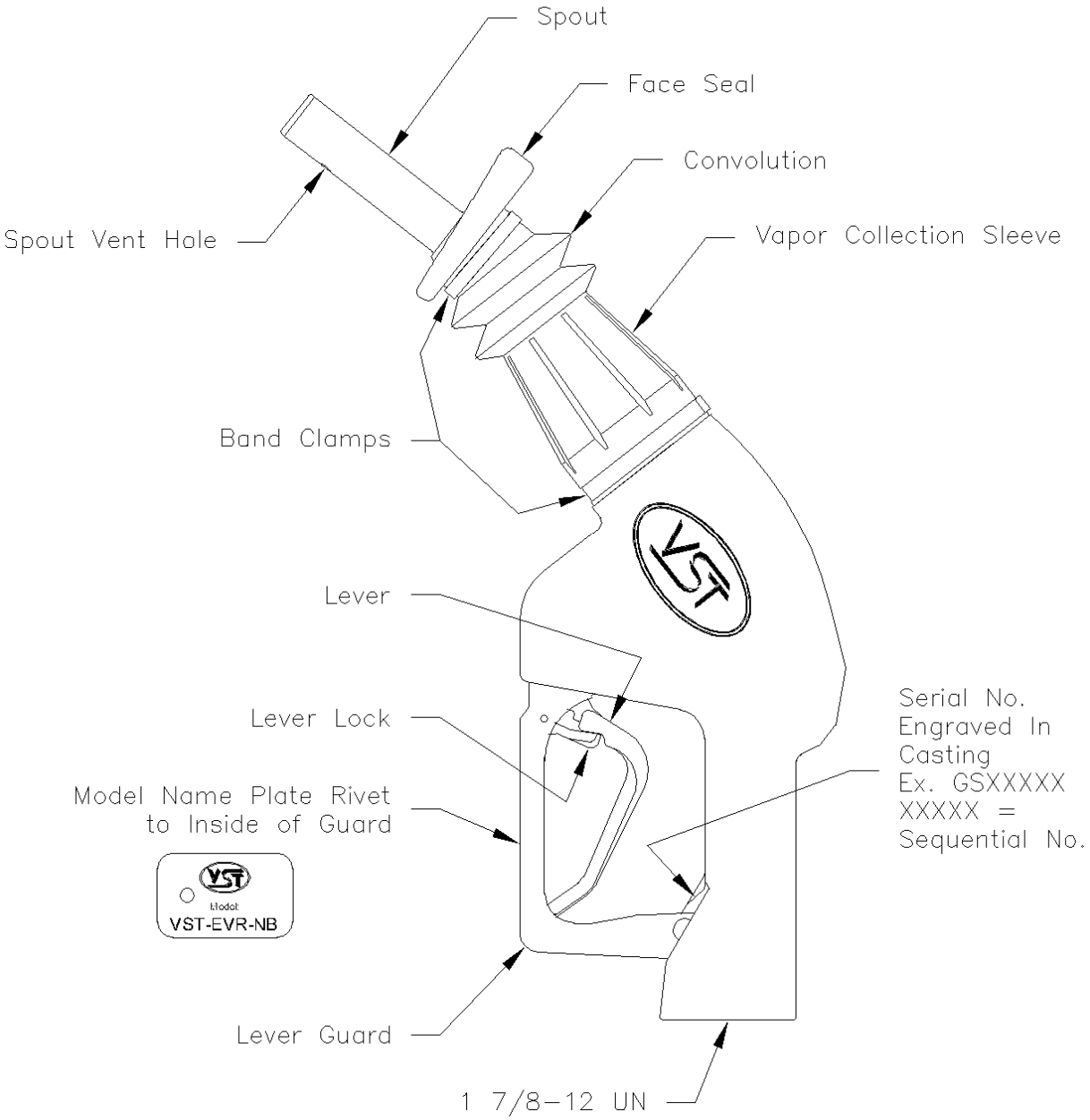

Figure 1A-2
VST Hanging Hardware
(Nozzle, Coaxial Curb Hose, Breakaway, and Coaxial Whip Hose)

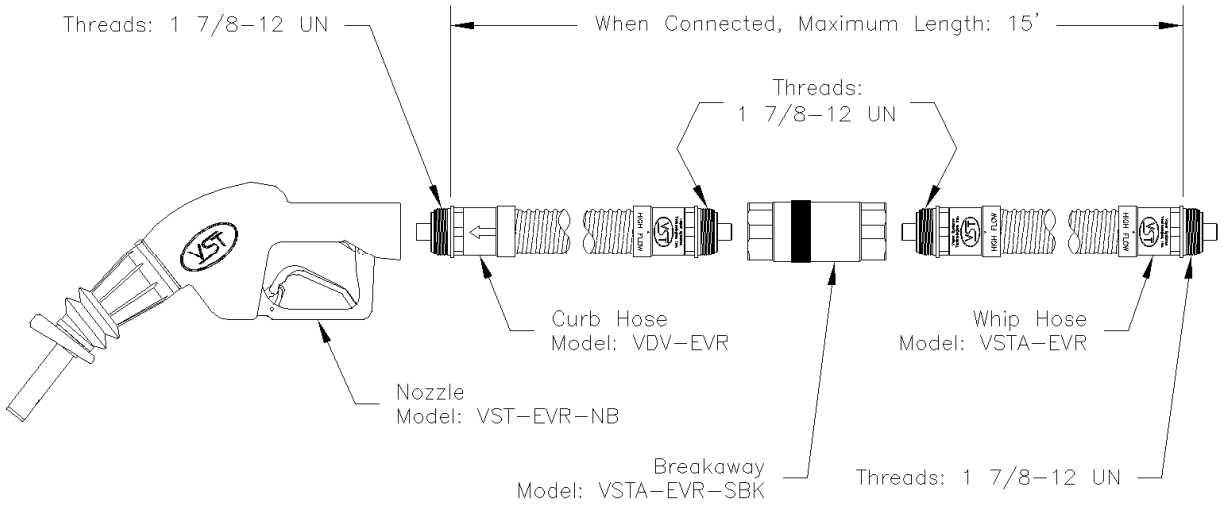

Figure 1A-3
Typical VST Hanging Hardware with Liquid Removal Device

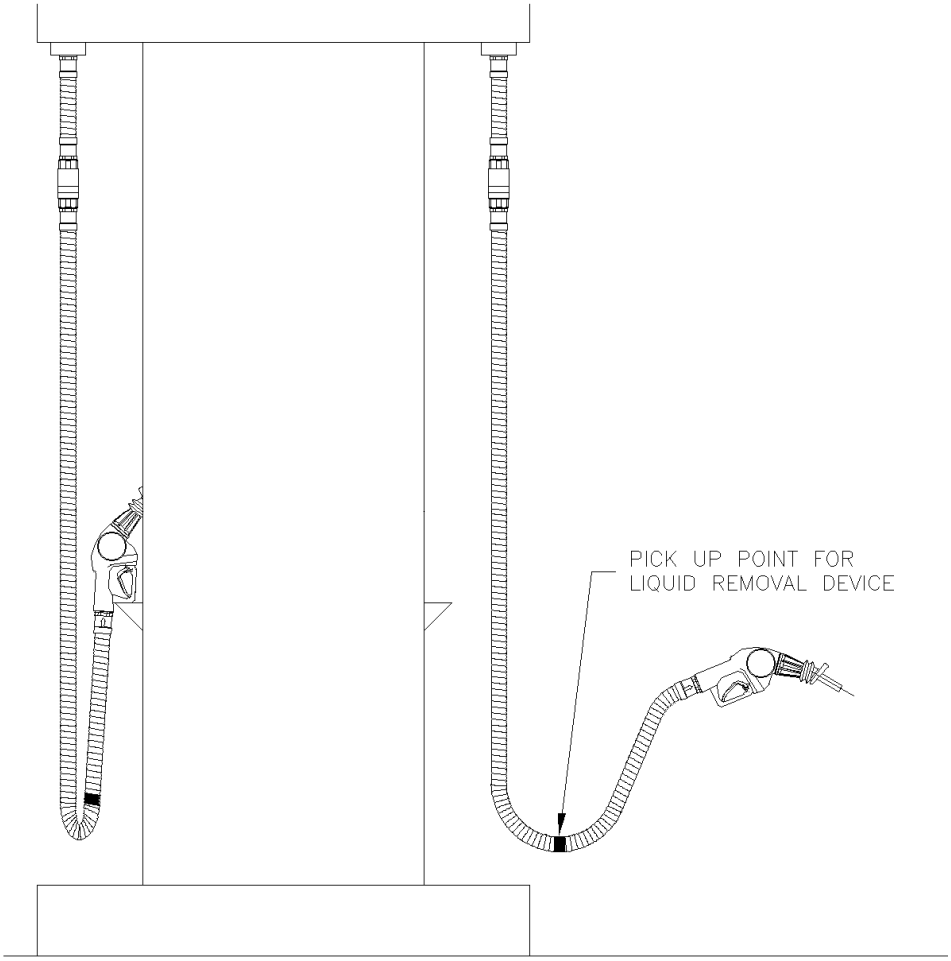

Figure 1A-4

Typical VST-ECS-CS3 Membrane Processor

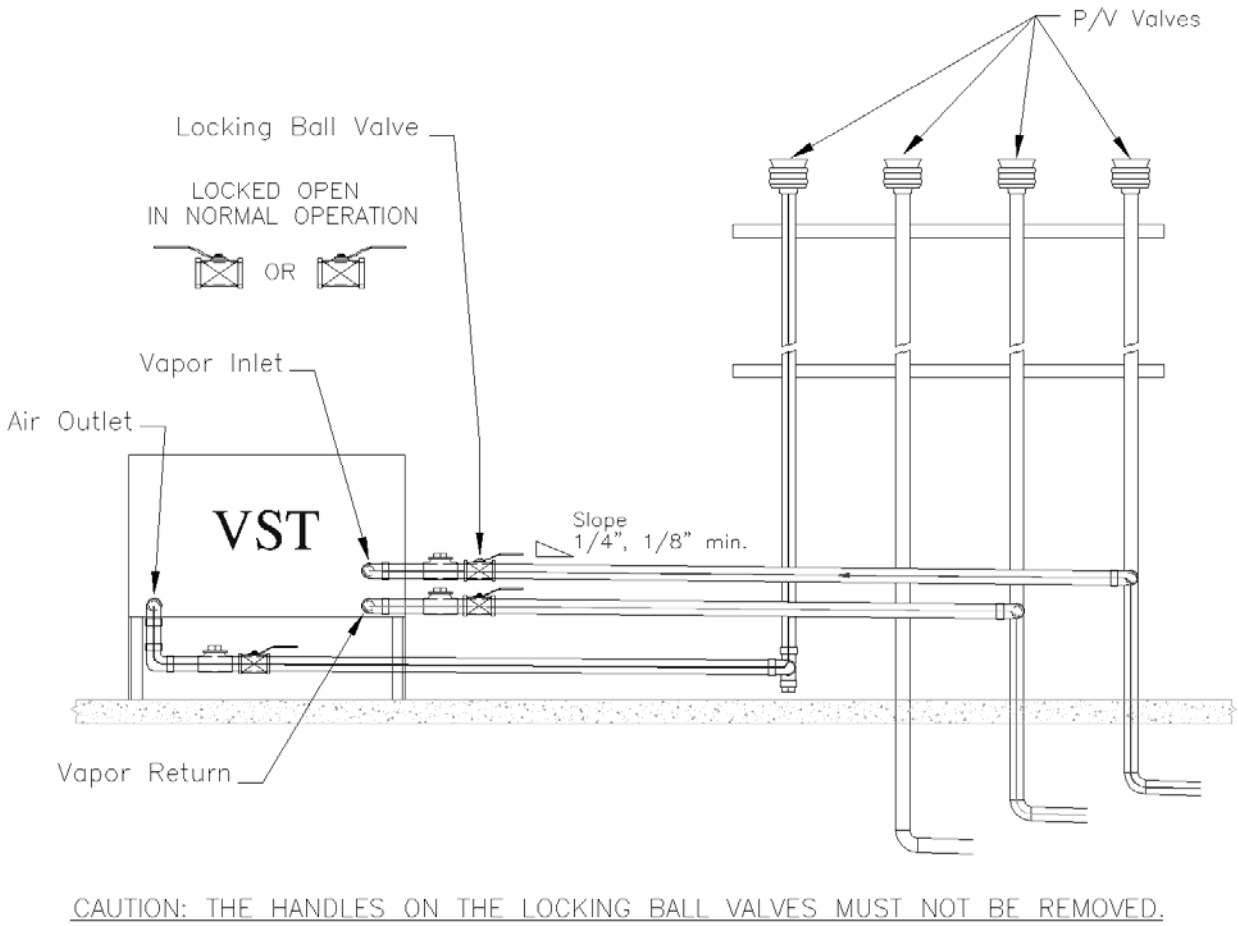

Figure 1A-5

Veeder-Root 331946-001
Vapor Pressure Sensor

Executive Order VR-203-C
VST Phase II EVR System

Exhibit 2
System Specifications

This exhibit contains the installation, maintenance and compliance standards and specifications that apply to the VST Phase II EVR System installed at a gasoline dispensing facility (GDF). All components must be installed, maintained, and operated in accordance with the specifications in the **ARB Approved Installation, Operation and Maintenance Manual** (IOM). Installation, maintenance and repair of system components, including removal and installation of such components in the course of any required tests, shall be performed by technicians certified by VST or Veeder-Root. However, GDF owner/operator can remove and install hanging hardware (nozzle, hose, breakaway, and whip hose).

Nozzle

1. A vapor collection sleeve shall be installed on the nozzle at the base of the spout, as shown in **Figure 2B-1**.

2. The VST Model VST–EVR-NB nozzle has an integral vapor valve which prevents the loss of vapor from the underground storage tanks, ensures proper operation of the system and prevents the ingestion of air into the system. The performance of the nozzle vapor valve can be determined by items 2.1 or 2.2.

   2.1. The maximum allowable leak rate for the nozzle vapor path, as determined by TP-201.2B, shall not exceed 0.07 cubic feet per hour (CFH) at a pressure of two inches water column (2.00" H_2O)

   2.2. Verification of the integrity of the vapor valve can be performed on installed nozzles using the nozzle bag test procedure in Exhibit 10.

3. The gasoline flow rate of the nozzle shall be between six (6.0) and ten (10.0) gallons per minute as determined by the applicable provisions of section 6 or 7 of Exhibit 5 or by direct observation for 30 seconds minimum at the maximum hand held position.

Vapor Collection

1. The system pressure drop from the nozzle to the UST, as determined by TP-201.4 (Methodology 1), shall not exceed the following:

   0.35 inches H_2O at a flow rate of 60 CFH of Nitrogen; and
   0.62 inches H_2O at a flow rate of 80 CFH of Nitrogen.

Coaxial Hoses

1. The maximum length of the curb hose, breakaway, and whip hose combined shall not exceed fifteen feet as measured from the base of the nozzle to the end of dispenser adapter or dispenser, as appropriate.

2. The liquid removal rate shall not be less than five milliliters per gallon (5 ml/gal) as determined by Exhibit 5 when tested with a gasoline flow rate between six (6.0) and ten (10.0) gallons per minute. Liquid removal requirement is applicable to all grade of gasoline.

3. Any hose configuration is allowed when installed in accordance with IOM section 12.

Breakaway Couplings

1. The VST breakaway couplings are non-reconnecting and shall be replaced following a drive-off. If reusing hanging hardware other than the breakaway following a drive-off, testing is required to ensure proper operation and no observed leaks of the hanging hardware prior to returning the fueling point to operation. The procedure for testing the hanging hardware following a drive-off is referenced in the IOM section titled “Drive-offs and Other Customer Abuse.”

Flow Limiter

1. No flow limiter is allowed for this system.

ECS Membrane Processor

1. The ECS Membrane Processor uses a selective membrane module to control UST ullage pressures. The processor vapor integrity shall demonstrate compliance with the static pressure decay criteria of TP-201.3 and Exhibit 4.

2. Unless there is maintenance or testing being conducted on the processor, the processor shall be on and in the automatic vapor processor mode and the three ball valves shall be locked in the open positions shown in **Figure 2B-2** for normal processor operation. The handles of the ball valves shall not be removed.

3. Piping to and from the processor shall be sloped 1/8” per foot minimum toward the vent line(s).

4. The hydrocarbon concentration of the ECS membrane processor taken from the Hydrocarbon Diagnostic Report shall be between ± one percent (±1%), when tested in accordance with Exhibit 6.

5. The Vapor Pressure Sensor shall be between +0.2 and –0.2 inches WC when tested in accordance with section 9 of Exhibit 8.

6. The processor shall activate when the pressure of the underground storage tank is less than or equal to 0.4 inches WC (≤ 0.4 inches WC) as determined by Exhibit 9.

7. The ECS Membrane Processor alarm shall activate when the emission factor is at or greater than 0.64 pounds/1000 gallons dispensed over a 24 hour period. A visual and audible alarm shall activate when this emission factor is exceeded for the first and second 24 hour periods.

8. The pressure reading from the TLS console shall be within ±0.2 inches WC of the measured ullage UST pressure as determined by section 8 of Exhibit 8.

9. The ECS Membrane Processor audible alarm shall be installed at a location that is most likely to be occupied by the station attendant during normal station operation (i.e., cash register).

10. The TLS console controlling the membrane shall have an RS232 port which shall be installed in a location that allows the RS232 port to be easily accessible, and if applicable per district requirements, for use at anytime. A vacant RS232 serial port shall always be available to electronically download reports.

Pressure/Vacuum Vent Valves for Storage Tank Vents

1. Except for the P/V vent valve referenced in item 3 of this section, all P/V vent valves shall be an ARB certified P/V valve for a Phase I system.

2. At least one pressure/vacuum (P/V) vent valve shall be installed on each tank vent. The maximum number of P/V vent valves allowed and P/V vent valve performance specifications are listed in the applicable Phase I EVR Executive Order. Vent lines may be manifold to minimize the number of P/V vent valves and potential leak sources, provided the manifold conforms to all applicable fire regulations. However, the vents connecting the vapor inlet and vapor outlet to the processor cannot be manifold together.

3. The P/V valve installed on the processor vent is not part of the Phase I system and no testing is required.

Vapor Recovery Piping Configurations

NOTE: Vapor Return Piping shall meet the requirements specified in section 4.11 of CP-201.

1. Vapor Return and Vent Lines

   For facilities installed on or after April 1, 2003, all vapor return and vent lines shall be a minimum nominal internal diameter of 2 inches from the dispensers or the vent stacks to the first manifold. All lines after the first manifold and back to the underground storage tank shall have a minimum nominal internal diameter of 3 inches.

Note: Facilities permitted by a local district prior to April 1, 2003 shall be required to meet the three inch diameter standard only upon facility modification which involves the addition, replacement, or removal of 50 percent or more of the buried vapor piping.

2. All vapor return lines shall have a minimum slope of 1/8 inch per foot from the dispenser riser to the riser of the UST. A slope of 1/4 inch or more per foot is recommended wherever feasible.

3. The dispenser shall be connected to the riser with either flexible or rigid material that is listed for use with gasoline. The dispenser-to-riser connection shall be installed so that any liquid in the lines will drain toward the storage tank. The internal diameter of the connector, including all fittings, shall not be less than one inch (1").

   Note: The dispenser-to-riser connection is defined as the piping connection between the dispenser piping and the inlet of the dispenser riser. A vapor shear valve may also be part of the riser connection.

4. There is no length restriction for the vapor return piping of the system as long as the system complies with the maximum pressure drop requirement, item 1 of the Vapor Collection section.

5. No product shall be dispensed from any fueling point at a GDF installed with the VST Phase II EVR System if there is a vapor line that is disconnected and open to the atmosphere.

6. No liquid condensate traps are allowed with this system.

Dispensers

1. For new installations and existing installations replacing dispensers or dispenser vapor piping, the minimum nominal internal diameter of dispenser vapor piping shall be one inch (1” ID). For existing installations, installed dispenser vapor piping may remain in use as long as the system complies with the maximum pressure drop requirement, item 1 of the Vapor Collection section.

2. Dispenser vapor piping shall be installed so that any liquid in the lines will drain toward the dispenser riser.

Phase I System

1. The Phase I system shall be an ARB-certified system that demonstrates compliance with the static pressure decay test criteria contained in TP-201.3 and Exhibit 4.

Maintenance Records

1. Each GDF operator owner shall keep records of VST processor alarms and maintenance performed at the facility. Such records shall be maintained on site in

accordance with district requirements or policies. The records shall include alarm date and time, nature of the alarm, troubleshooting, maintenance or repair performed to validate and/or correct alarms, component, or system failures, date when maintenance or repair was conducted, name and Certified Technician Identification Number of individual conducting maintenance or test, affiliation, and telephone number. Additional information may be required in accordance with local district requirements. An example of a GDF maintenance and alarm record is shown in Figure 2B-3.

2. Maintenance shall be conducted in accordance with VST Systems Scheduled Maintenance section of the ARB approved Installation, Operation, and Maintenance Manual.

Vapor Recovery Equipment Defects

The following is deemed a defect for the affected fueling point(s) or system.

1. The fueling point shall be removed from service when more than 30% of a nozzle face seal is missing (e.g., a triangular or similar shape in which greater than 2.5 inches of the faceplate circumference is missing (accumulated)).

2. The fueling point shall be removed from service when more than 0.375 square inches of a nozzle vapor collection sleeve is missing (e.g., a rectangular shape of greater than nine/sixteenth (9/16) inches or more on each side, a circular shape of eleven/sixteenth (11/16) inches or more in diameter, or a triangular shape of seven/eighth (7/8) inches on the side.

3. The fueling point shall be removed from service when the total slit length in the convolutions exceeds 18 inches as determined by direct measurements.

4. The fueling point shall be removed from service when a hose is found to have greater than 175 ml of gasoline in the vapor side as determined by sections 6.1 to 6.5 of Exhibit 5. Note: Prior to draining gasoline from the vapor side of the VST hose, use VST tool P/N VST-STP-100 and plug the fuel spout. **Do not activate dispenser when draining gasoline from the vapor side of the VST hose.**

5. The fueling point shall be removed from service when VST system pressure drops exceeding the following conditions as determined by Methodology 1 of TP-201.4:

   5.00 inches WC at a flow rate of 60 CFH of Nitrogen; and
   8.00 inches WC at a flow rate of 80 CFH of Nitrogen.

6. The fueling point shall be removed from service when the dispensing rate is greater than ten (10) gallons per minute (gpm) or less than five (5) gpm as determined by the applicable provisions of section 6 or 7 of Exhibit 5 or by direct observation for 30 seconds minimum at the maximum hand held position.

7. The fueling point shall be removed from service when any hose has a visible opening as determined by direct observation.

8. The fueling point shall be removed from service when the insertion interlock mechanism allows dispensing when the bellow is uncompressed as determined by direct observation or GDF-09 (see Vapor Recovery Defects List).

9. The fueling point shall be removed from service when the nozzle automatic liquid shut-off mechanisms malfunction in any manner as determined by EPO No. 26-F (See Vapor Recovery Defects List) or direct observation.

10. The fueling point shall be removed from service when any nozzle has a defective vapor valve as determined by Exhibit 10 or when the vapor valve has a leak rate that exceeds 0.07 cubic feet per minute at a pressure of two (2) inches WC as determined by TP-201.2B.

11. The system shall be removed from service when the three ball valves on the VST processor are not locked in the proper operating configuration (Figure 2B-2) as determined by direct observation.

12. The system shall be removed from service when the ECS membrane processor is not on or in the automatic vapor processor mode as determined by the Diagnostic section of the Pressure Measurement Control (Section 16) of IOM.

13. The system shall be removed from service when the VST ECS Processor alarms for emission factor are activated for two consecutive 24 hour periods as determined by direct observation.

14. The system shall be removed from service if the processor fails to activate when the UST pressure is less than or equal to 0.4 inches WC (≤ 0.4 inches WC) as determined by Exhibit 9.

15. The system shall be removed from service when the hydrocarbon concentration of the VST ECS Processor exceeds twelve percent (12%) as found in the Vapor Processor Status Report.

16. The fueling point or system shall be removed from service when any component required by this Executive Order is absent, installed improperly or disconnected as determined by direct observation.

Figure 2B-1
Model VST-EVR- NB Nozzle

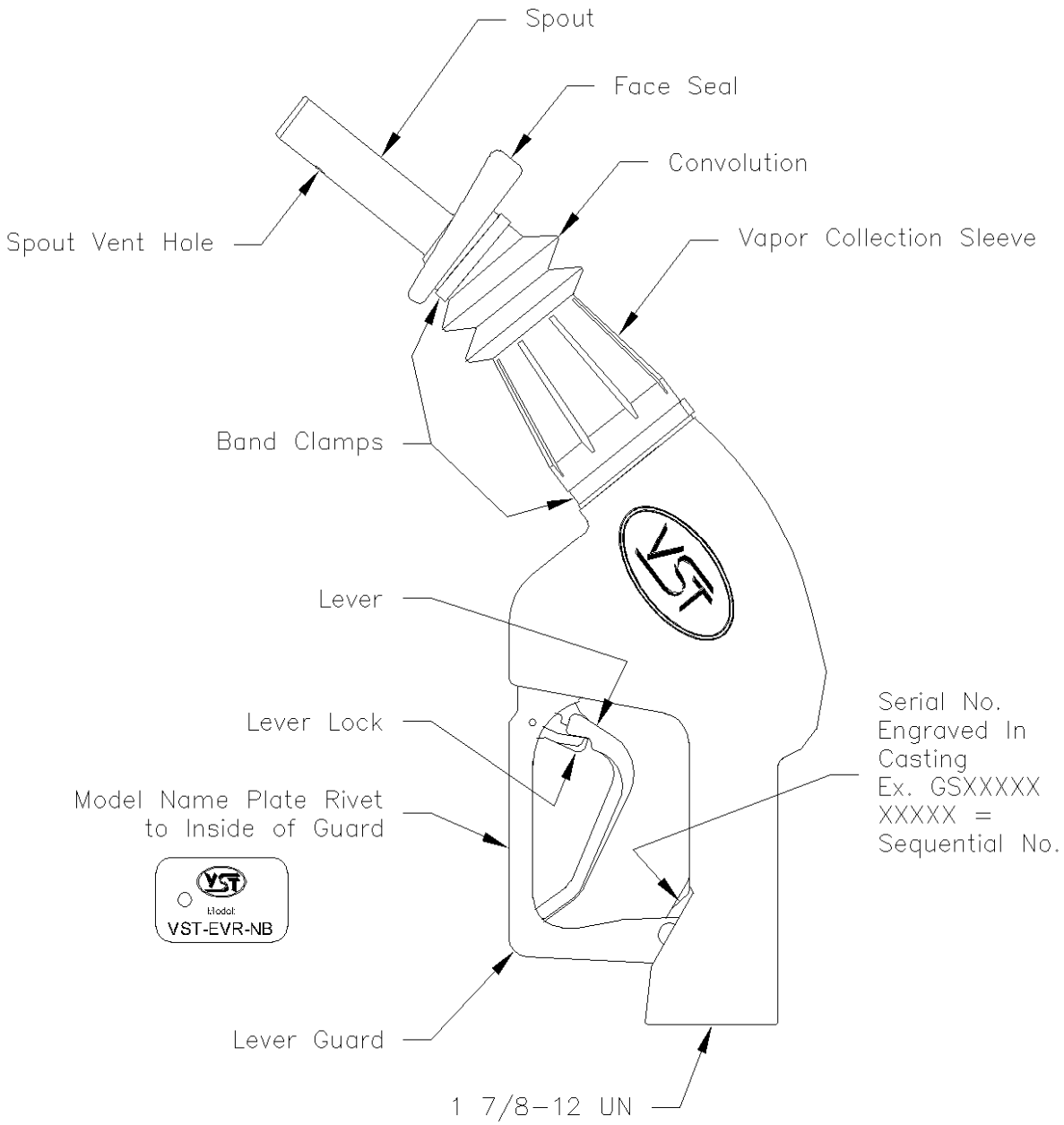

Figure 2B-2
Typical VST-ECS-CS3 Membrane Processor

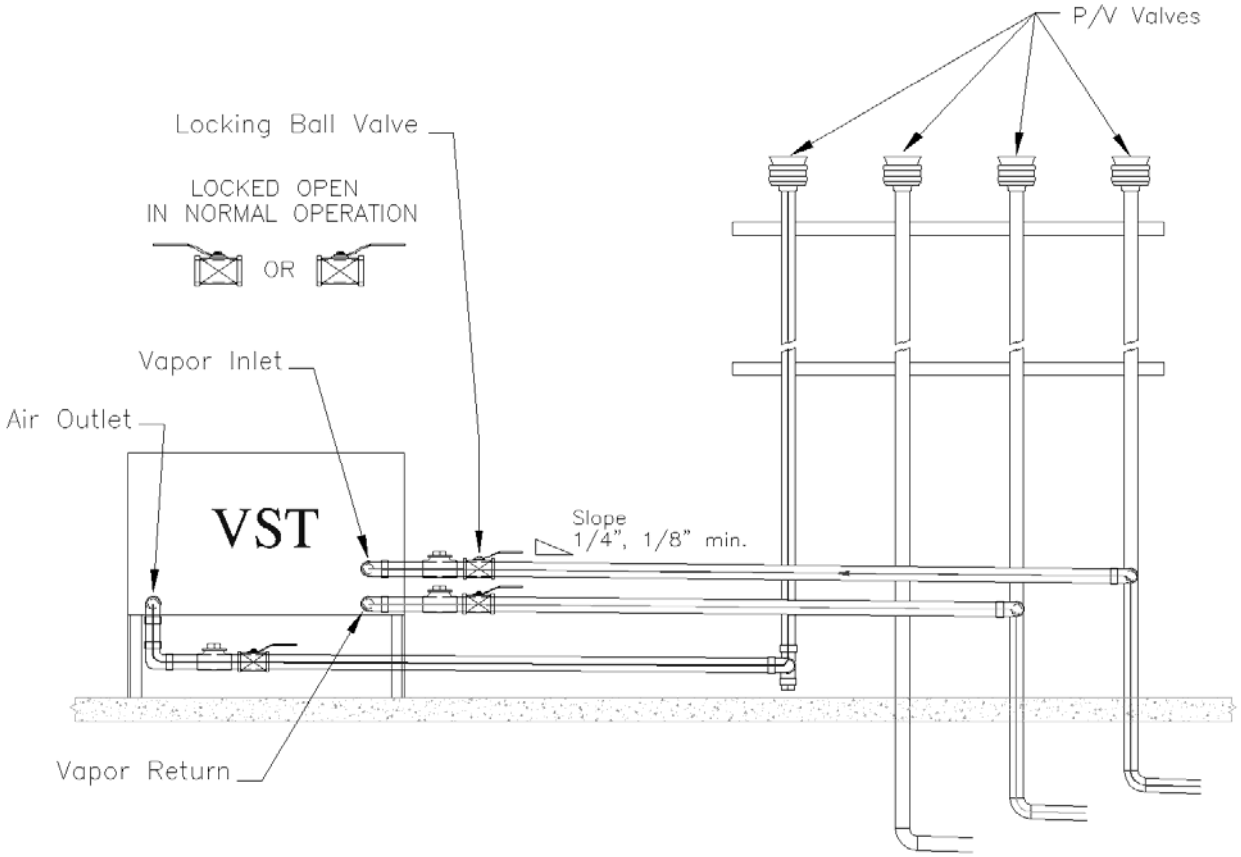

CAUTION: THE HANDLES ON THE LOCKING BALL VALVES MUST NOT BE REMOVED.

Figure 2B-3
Example of a GDF Maintenance Record and Alarm History Record

Date of Maintenance/ Test/Inspection/Failure/ alarm history (including date and time of maintenance call)	Repair Date To Correct Test Failure	Maintenance/Test/Inspection Performed and Outcome/Action Taken in Response to Alarm	Affiliation	Name and Technician ID Number of Individual Conducting Maintenance or Test	Telephone Number

Executive Order VR-203-C
VST Phase II EVR System

Exhibit 3
VST Manufacturing Performance Standards and Specifications

The VST Phase II EVR System and all components shall be manufactured in compliance with the performance standards and specifications in CP-201 (amended May 25, 2006), as well as the requirements specified in this Executive Order. All components (Exhibit 1) shall be manufactured as certified; no change to the equipment, parts, design, materials or manufacturing process shall be made unless approved in writing by the Executive Officer or Executive Officer delegate. Unless specified in Exhibit 2 or in the ***ARB Approved Installation, Operation and Maintenance Manual***, the requirements of this section apply to the manufacturing process and are not appropriate for determining the compliance status of a gasoline dispensing facility.

1. NOZZLES

Every nozzle shall be tested at the factory. Every nozzle shall have affixed to it a card or label stating the performance specifications listed below, and a statement that the nozzle was tested to, and met, the following specifications.

a. The nozzle vapor valve leak rate shall not exceed 0.07 cubic feet per hour (CFH) at a pressure of +2 inches WC when tested in accordance with the latest version of TP-201.2B.

b. The nozzle automatic shut off feature is tested at all service clip settings as well as handheld in accordance with Underwriters Laboratories (UL) Standard 842.

c. The nozzle's primary and secondary shut-off mechanism shall be identical to the design that passed the California Department of Food and Agriculture Division of Measurement Standards Article 2 (DMS 6-6-97).

d. The nozzle is manufactured to the specifications that passed all tests conducted during the ARB certification for the following:

TP-201.2C	- Spillage from Phase II Systems
TP-201.2D	- Post Fueling Drips From Nozzles
TP-201.2E	- Gasoline Liquid Retention and Spitting in Nozzles and Hoses
TP-201.2J	- Nozzle Pressure Drop

e. The nozzle vapor collection boot is manufactured such that the force necessary to compress the nozzle bellows 0.5 inches is in the range of 10-16 pounds force.

f. The terminal end of each nozzle shall be manufactured in accordance with the specifications referenced in Section 4.7.3 of CP-201.

2. COAXIAL HOSES

a. Every coaxial hose is tested for continuity and pressure tests in accordance with UL Standard 330.

b. Every coaxial hose is manufactured to the standards and specifications that passed all tests conducted during the ARB certification for the following:

Exhibit 5	- Liquid Removal Test Procedure (for curb hoses)
TP-201.2J	- Hose Pressure Drop (for curb and whip hoses)

3. BREAKAWAY COUPLINGS

a. Every breakaway coupling is tested for continuity and pressure tests in accordance with UL Standard 567.

b. Every breakaway coupling is manufactured to the standard that passed all tests conducted during the ARB certification for the following:

TP-201.2J	- Breakaway Pressure Drop

4. ECS MEMBRANE PROCESSOR

a. Every ECS Membrane Processor is subjected to a VST Pressure Decay Test to verify pressure integrity.

b. Every ECS Membrane Processor is subjected to a VST Heat Trace Cable Continuity Test to ensure proper connections.

c. Every ECS Membrane Processor is subjected to a VST operability test to ensure proper rotation and operation of the blower motor and vacuum pump.

Executive Orders VR-203-C and VR-204-C
VST Phase II EVR System

Exhibit 4
Required Items in Conducting TP-201.3

The instructions below are required when conducting TP-201.3 for the VST Phase II EVR system. The tester shall document that each step was followed as indicated below and shall include this page of the Exhibit with the submission of TP-201.3 test results. Note that districts may require use of an alternate form to meet these requirements, provided the alternate form includes the same minimum parameters.

1. Prior to conducting TP-201.3, the three ball valves on the VST Membrane Processor shall be open, as shown in Figure 1.

2. The VST Membrane Processor shall be turned off. Refer to the ARB Approved Installation, Operation, and Maintenance Manual for instructions on turning off the processor. Not turning off the processor will bias the test toward failure.

3. After conducting TP-201.3, leave the three ball valves in the open locked position. Turn the VST Membrane Processor back on.

Required Steps	Verification (please circle)
1. All ball valves are in the open locked position before conducting TP-201.3?	Yes No
2. Processor is turned off before conducting TP-201.3?	Yes No
3. All ball valves in the open locked position and Processor is turned back on after conducting TP-201.3?	Yes No

Test Company: _____ Facility Name:_____

_____
Print Name (Technician) Signature Date

_____
Technician Certification Number and Expiration Date
(ICC or District Training Certification, as applicable)

Figure 1

Configuration of VST Membrane Processor to Conduct TP-201.3

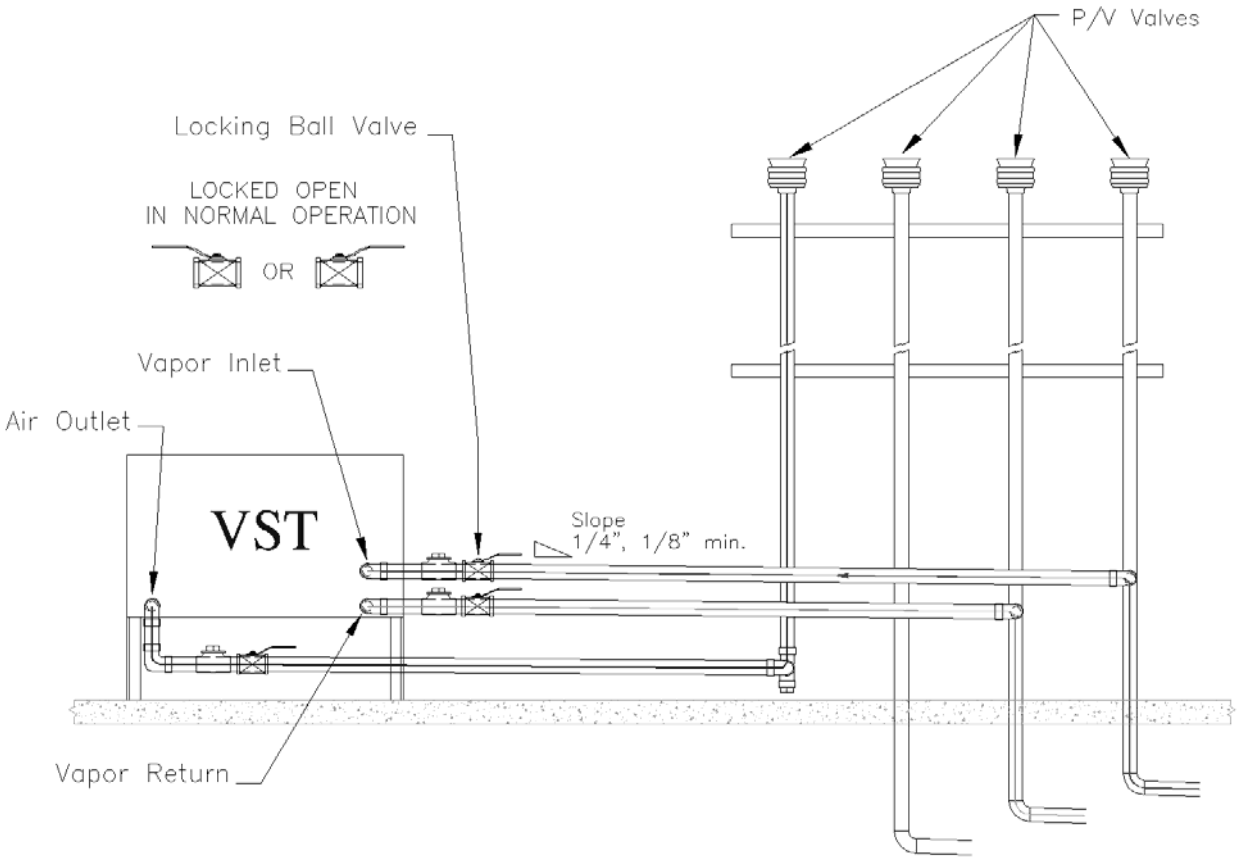

CAUTION: THE HANDLES ON THE LOCKING BALL VALVES MUST NOT BE REMOVED.

Executive Orders VR-203-C and VR-204-C
VST Phase II EVR System

Exhibit 5
Liquid Removal Test Procedure

Definitions common to all certification and test procedures are in:

D-200 Definitions for Vapor Recovery Procedures

For the purpose of this procedure, the term "ARB" refers to the California Air Resources Board, and the term "Executive Officer" refers to the ARB Executive Officer or his or her authorized representative or designate.

1. PURPOSE AND APPLICABILITY

1.1 This procedure is used to quantify the removal rate of liquid from the vapor passage of a Phase II balance system hose equipped with a liquid removal device. This procedure provides a method to determine compliance with the liquid removal requirements specified in ARB Executive Order VR-203 and any subsequent amendments or revisions.

2. PRINCIPLE AND SUMMARY OF TEST PROCEDURE

2.1 This test procedure provides two options to determine the compliance of liquid removal devices. Under option 1 (short version), liquid in the vapor path of a coaxial hose is drained and measured. If the volume of liquid drained equals or exceeds 25 ml, a liquid removal test is conducted. For those hoses with less than 25 ml drained, no further testing is required. Under option 2 (long version), all hoses are evaluated regardless of the volume of liquid drained. Option 2 includes a prewetting and wall adhesion step. Both options test the liquid removal device by introducing gasoline into the vapor path of the coaxial hose through the nozzle bellows. After 7.5 gallons of gasoline is dispensed, the amount of gasoline remaining in the hose is measured and the liquid removal rate is determined. The district shall specify which testing option is to be used.

Caution: When draining liquid from the vapor side of the hose, make sure the dispenser is not activated. The nozzle vapor valve is on the same stem as the fuel valve. To drain gasoline from the vapor side of the hose, the fuel lever must be engaged. If the dispenser is activated, gasoline in the fuel hose may be pressurized when engaging the fuel lever.

3. BIASES AND INTERFERENCES

3.1. Slits or tears in the hose or nozzle vapor path may bias the results towards compliance.

3.2. This test shall not be conducted on any fueling point where the hanging hardware is defective as identified in Exhibit 2.

3.3. Any spillage of gasoline invalidates the test for any volumes that are required to be measured or recorded.

3.4. A breach of the inner product hose may introduce additional gasoline into the outer vapor path resulting in a larger volume drained than introduced.

3.5. Not having the liquid extraction device (indicated by the mark on the outside of the house) at the bottom of the hose loop during liquid removal testing, as shown in Figure 1, will bias the results towards failure.

3.6. The test procedure requires the use of VST's nozzle spout plug, P/N VST-STP-100 as shown in Figure 2. This tool is used to plug the spout when draining liquid from the vapor side of the hose. Not plugging the spout may bias the results towards failure. Nicks, cuts, or tears in the plug o-rings will bias the results towards failure.

3.7. Dispensing rates not between 6.0 and 10.0 gallons per minute (GPM) invalidates the test.

4. SENSITIVITY, RANGE, AND PRECISION

4.1 The range of measurement of the liquid removal rate is dependent upon the range of the graduated cylinder used for testing.

4.2 To ensure precision, graduated cylinder readings shall be measured at the liquid level meniscus.

5. EQUIPMENT

5.1. Nozzle Spout Plug: Use VST's spout plug, P/N VST-STP-100 (Figure 2).

5.2. Stopwatch. Use a stopwatch accurate to within 0.2 seconds.

5.3. Funnels. Large and small gasoline compatible, non-breakable, funnels with dimensions similar to those as shown in Figure 3, or equivalent.

5.4. Graduated Cylinders. Gasoline compatible, non-breakable 0-25ml, 0-100ml, 0-250 ml, and 0-500 ml graduated cylinders with stable base plates. The 25ml cylinder may be necessary to quantify volumes of liquid less than 20 ml.

5.5. Gasoline Test Tank. (Optional) A portable tank, meeting fire safety requirements for use with gasoline, may be used to receive the gasoline dispensed during testing. The tank shall have sufficient volume so that at least 10.0 gallons may be dispensed prior to activating the primary shutoff mechanism of the nozzle. **When using a gasoline test tank, ensure that a ground strap is used and that it is properly connected to an acceptable ground.** To minimize testing-related emissions, vehicle refueling events should be used for this procedure whenever feasible.

5.6. Traffic Cones. Use traffic cones to encircle the area where testing is conducted.

5.7. Field Data Sheet. Use the appropriate data sheet to record liquid removal test information. Forms 1 and 2 serve as examples; districts may require modified versions.

5.8. Gasoline Container. Use a portable fuel container equipped with a tight fitting cap, of at least 1.0 gallon capacity.

NOTE: THIS TEST PROCEDURE PROVIDES TWO OPTIONS TO DETERMINE COMPLIANCE OF LIQUID REMOVAL DEVICES. THE DISTRICT SHALL SPECIFY WHICH TESTING OPTION IS TO BE USED

6. OPTION 1 (SHORT VERSION)

PRE-TEST PROCEDURE

6.1 Verify that the 500 ml graduated cylinder is empty. Position the large funnel into the graduated cylinder.

6.2 Remove the nozzle from the dispenser. **Do not activate dispenser!** Install VST's spout plug, P/N VST-STP-100 in the tip of the spout (Figure 2). Carefully tilt the spout into the funnel/graduated cylinder assembly.

6.3 Lower the nozzle and funnel/graduated cylinder assembly as close to the ground as possible. "Walk out" the hose while keeping the nozzle lowered and hose fully extended. The hose shall slope downward from the dispenser toward the nozzle.

6.4 **Do not activate dispenser!** Open the nozzle's vapor check valve by compressing the bellows and engaging the fuel lever. Allow 20 seconds for all liquid to drain. Use caution to avoid spillage.

6.5 Remove VST's spout plug and return the nozzle to the dispenser and measure the volume of liquid drained. If the volume drained is less than 200 ml, transfer the liquid into an appropriately sized graduated cylinder. For example, if 40 ml of liquid was drained, use the 100 ml graduated cylinder to take the measurement.

6.6 Record the amount of liquid drained on Form 1 ("PRE-TEST").

6.7 If the volume drained is greater than or equal to 25 ml, proceed to Section 6.8 of the procedure. Hoses with greater than 25 ml drained are considered to be pre-wetted. If the amount drained is less than 25 ml, proceed to the next nozzle/hose to be evaluated and repeat Section 6.1-6.6

TEST PROCEDURE (FOR HOSES WITH GREATER THAN 25 ML DRAINED)

6.8 Pour 150 ml to 175 ml of gasoline into the 250 ml graduated cylinder. Measure and record this volume on Form 1 (VI).

6.9 Remove the nozzle from the dispenser and position the nozzle upright so that the

spout is in a vertical position. **Do not activate dispenser!**

6.10 Open the nozzle's vapor check valve by compressing the bellows and engaging the fuel lever. Carefully insert the stem of the small funnel between the bellows and nozzle spout.

6.11 Pour the measured volume into the vapor path of the hose. Use caution not to spill the gasoline. Remove the small funnel after the gasoline has been introduced.

6.12 Insert the nozzle into a vehicle or test tank fill pipe.

6.13 Find the mark on the outside of the hose which indicates the location of the liquid pick-up device. Ensure the mark is at the bottom of the hose loop when dispensing as shown in Figure 1. This can be accomplished by lifting up the back of the hose, adjusting nozzle position, or adjusting the test tank position.

6.14 Dispense 7.5 (±0.5) gallons at the highest possible flow rate by holding the nozzle lever in the maximum handheld position. Use a stopwatch to measure the time elapsed while dispensing. Record the volume of fuel dispensed (G) and the elapsed time (T) on Form 1. Return nozzle to the dispenser.

6.15 Calculate the dispensing rate using the equation below. If the dispensing rate is not between 6.0 and 10.0 gallons per minute (GPM), the test results are invalid.

$$GPM = 60 \times \left(\frac{G}{T}\right)$$

Where:

GPM	=	dispensing rate (in gallons per minute)
G	=	gallons of fuel dispensed
T	=	number of seconds required to dispense

6.16 Using the 250 ml graduated cylinder and large funnel, carefully drain the remaining liquid from the vapor path of the hose as described in Section 6.1 through 6.5 **(make sure dispenser is not activated and spout plug is installed before draining liquid!)**. Record this quantity on Form 1 (VF).

6.17 Use Equation 9.1 to calculate the liquid removal rate for all the applicable hoses tested.

6.18 If the liquid removal rate is less than 5.0 ml/gallon, but greater than or equal to 4.5 ml/gallon, repeat the test two additional times and average the three results.

7. OPTION 2 (LONG VERSION)

PRETEST PROCEDURE

7.1 Carefully pour 150 ml of gasoline into the 250 ml graduated cylinder.

7.2 Remove the nozzle from the dispenser. **Do not activate dispenser!** Install VST's spout plug, P/N VST-STP-100 in the tip of the spout as shown in Figure 2. Position the nozzle upright so that the spout is in a vertical position.

7.3 Open the nozzle's vapor check valve by compressing the bellows and engaging the fuel lever. Carefully insert the stem of the small funnel between the bellows and nozzle spout.

7.4 Pour the gasoline from the 250 ml graduated cylinder into the vapor path of the hose. Use caution not to spill the gasoline. Remove the small funnel after the gasoline has been introduced.

7.5 Verify that the 500 ml graduated cylinder is empty. Position the large funnel into the graduated cylinder.

7.6 Carefully tilt the spout into the funnel/graduated cylinder assembly. **Make sure VST's spout plug is installed and the dispenser is deactivated.**

7.7 Lower the nozzle and funnel/graduated cylinder assembly as close to the ground as possible. "Walk out" the hose while keeping the nozzle lowered and hose fully extended. The hose shall slope downward from the dispenser toward the nozzle.

7.8 Open the nozzle's vapor check valve by compressing the bellows and engaging the fuel lever. Allow 20 seconds for all liquid to drain. Use caution to avoid spillage. If necessary, drain full graduated cylinders into a portable gas can until the hose is empty.

7.9 Remove VST's spout plug and return the nozzle to the dispenser.

TEST PROCEDURE

7.10 Pour 150 ml to 175 ml of gasoline into the 250 ml graduated cylinder. Measure and record this volume on Form 2 (VI).

7.11 Remove the nozzle from the dispenser. **Do not activate dispenser!** Position the nozzle upright so that the spout is in a vertical position.

7.12 Open the nozzle's vapor check valve by compressing the bellows and engaging the fuel lever. Carefully insert the stem of the small funnel between the bellows and nozzle spout.

7.13 Pour the measured volume into the vapor path of the hose. Use caution not to spill the gasoline. Remove the small funnel after the gasoline has been introduced.

7.14 Insert the nozzle into a vehicle or test tank fill pipe.

7.15 Find the mark on the outside of the hose which indicates the location of the liquid pick-up device. Ensure the mark is at the bottom of the hose loop when dispensing

as shown in Figure 1. This can be accomplished by lifting up the back of the hose, adjusting nozzle position, or adjusting the test tank position.

7.16 Dispense 7.5 (±0.5) gallons at the highest possible flow rate by holding the nozzle lever in the maximum handheld position. Use a stopwatch to measure the time elapsed while dispensing. Record the volume of fuel dispensed (G) and the elapsed time (T) on Form 2. Return nozzle to the dispenser.

7.17 Calculate the dispensing rate using the equation below. If the dispensing rate is not between 6.0 and 10.0 gallons per minute (GPM), the test results are invalid.

$$GPM = 60 \times \left(\frac{G}{T}\right)$$

Where:

GPM	=	dispensing rate (in gallons per minute)
G	=	gallons of fuel dispensed
T	=	number of seconds required to dispense

7.18 Using the 250 ml graduated cylinder and large funnel, carefully drain the remaining liquid from the vapor path of the hose as described in Section 7.5 through 7.8 **(make sure dispenser is deactivated and spout plug is installed before draining liquid!)**. Record this quantity on Form 2 (VF).

7.19 Open the nozzle's vapor check valve by compressing the bellows and engaging the fuel lever. **Do not activate dispenser!** Carefully insert the stem of the small funnel between the bellows and nozzle spout

7.20 Use the 250 ml graduated cylinder and small funnel to pour 150 ml of gasoline into the vapor passage of the hose. Dispense no gasoline.

7.21 Using the 250 ml graduated cylinder and large funnel, completely drain the gasoline from the vapor passage back into the graduated cylinder as described in Section 7.5 through 7.9 **(make sure dispenser is deactivated and spout plug is installed before draining liquid!)**.

7.22 Subtract the volume drained (value from Section 7.21) from the volume added (value from Section 7.20). This value represents the volume of gasoline lost due to wall adhesion. The purpose of the wall adhesion value is to quantify the amount of gasoline lost to evaporation from transfer to and from the graduated cylinders and adhesion of liquid to vapor passage surfaces in previous measurements. Record this quantity on Form 2 (VW).

7.23 Use Equation 9.2 to calculate the liquid removal rate for all the applicable hoses tested.

7.24 If the liquid removal rate is less than 5.0 ml/gallon, but greater than or equal to 4.5 ml/gallon, repeat the test two additional times and average the three results.

8. POST TEST PROCEDURES

8.1. Empty all containers and return any excess gasoline to the underground storage tank.

8.2. Remove the traffic cones from the testing area.

9. CALCULATING RESULTS

9.1 If using OPTION 1(short version), the liquid removal rate shall be calculated as follows:

$$VR = \frac{VI - VF}{G}$$

Where:

VR	=	Gasoline removed per gallon dispensed, milliliters/gallon
VI	=	Total initial volume poured into hose vapor passage, milliliters
VF	=	Volume of gasoline remaining in the hose vapor passage after dispensing, milliliters
G	=	Total dispensed, gallons

9.2 If using OPTION 2 (long version), the liquid removal rate shall be calculated as follows:

$$VR = \frac{(VI - VW) - VF}{G}$$

Where:

VR	=	Gasoline removed per gallon dispensed, milliliters/gallon
VI	=	Total initial volume poured into hose vapor passage, milliliters
VW	=	Volume of liquid lost due to wall adhesion, milliliters
VF	=	Volume of gasoline remaining in the hose vapor passage after dispensing, milliliters
G	=	Total dispensed, gallons

10. REPORTING RESULTS

10.1. Record all applicable liquid removal rate information on the appropriate form as shown in Form 1 and 2. Districts may require the use of alternate forms provided that the alternate forms include the same parameters as identified in Forms 1 and 2.

10.2. If the calculated liquid removal rate is greater than or equal to 5 milliliters/gallon, the liquid removal device has demonstrated compliance.

10.3. If the calculated liquid removal rate is less than 5 milliliters/gallon, the liquid removal

device is not in compliance.

11. ALTERNATIVE TEST PROCEDURES

This procedure shall be conducted as specified. Modifications to this test procedure shall not be used to determine compliance unless prior written approval has been obtained from the Executive Officer, pursuant to Section 14 of Certification Procedure CP-201.

FIGURE 1
Position of Liquid Removal Device
When Conducting Liquid Removal Testing

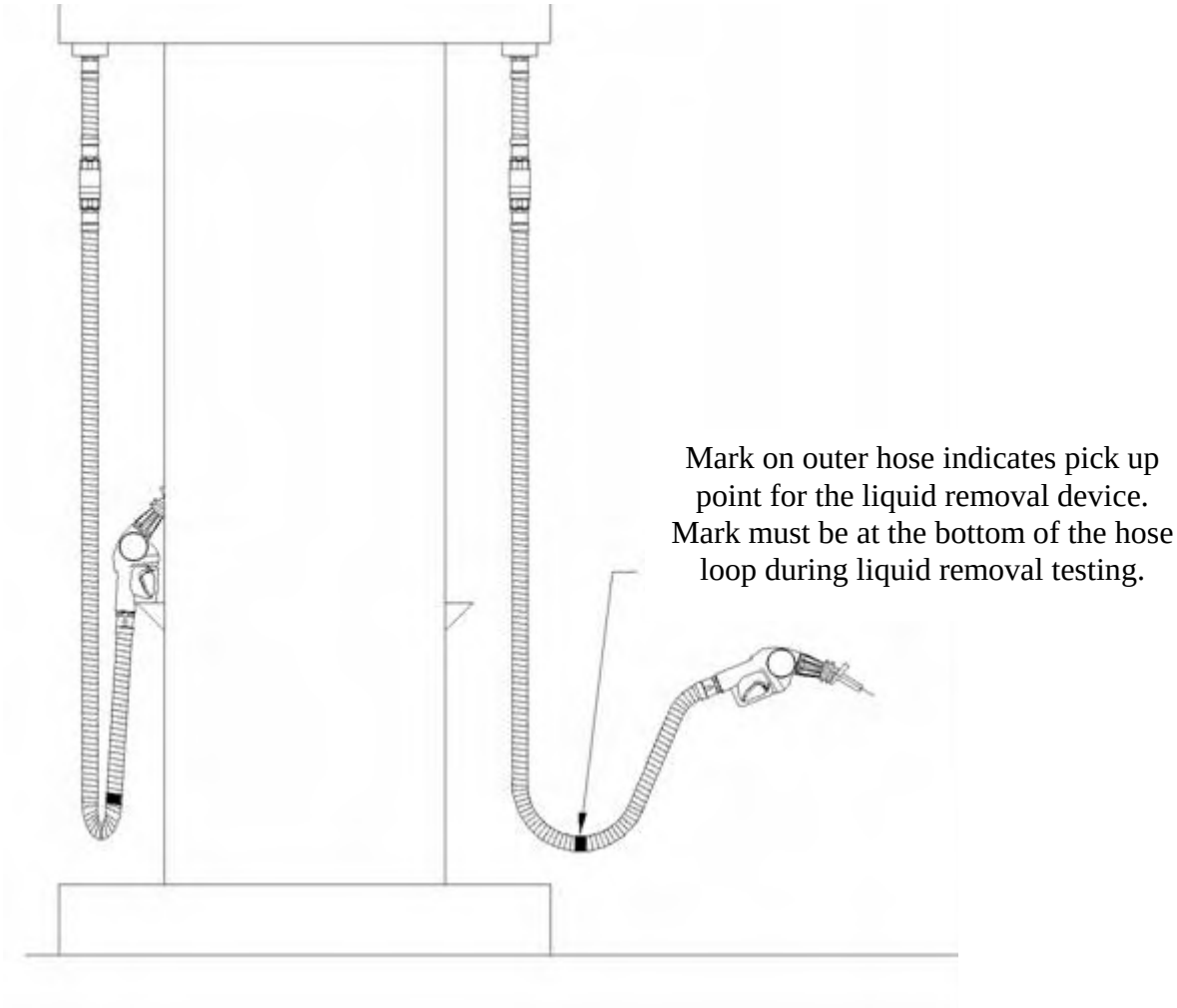

FIGURE 2
VST Nozzle Spout Plug P/N VST-STP-100

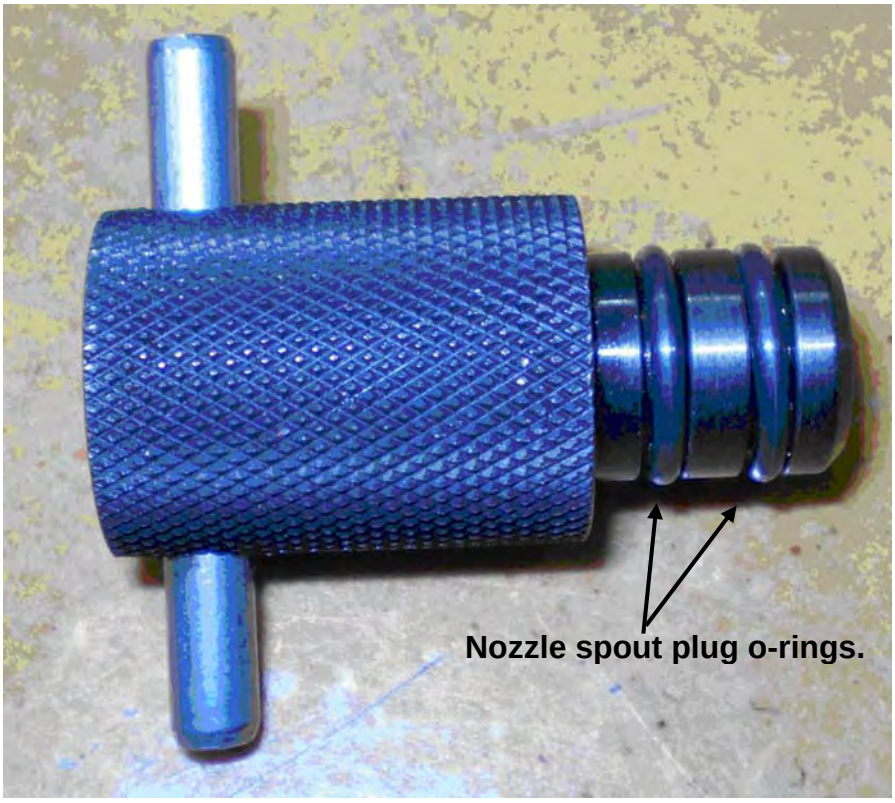

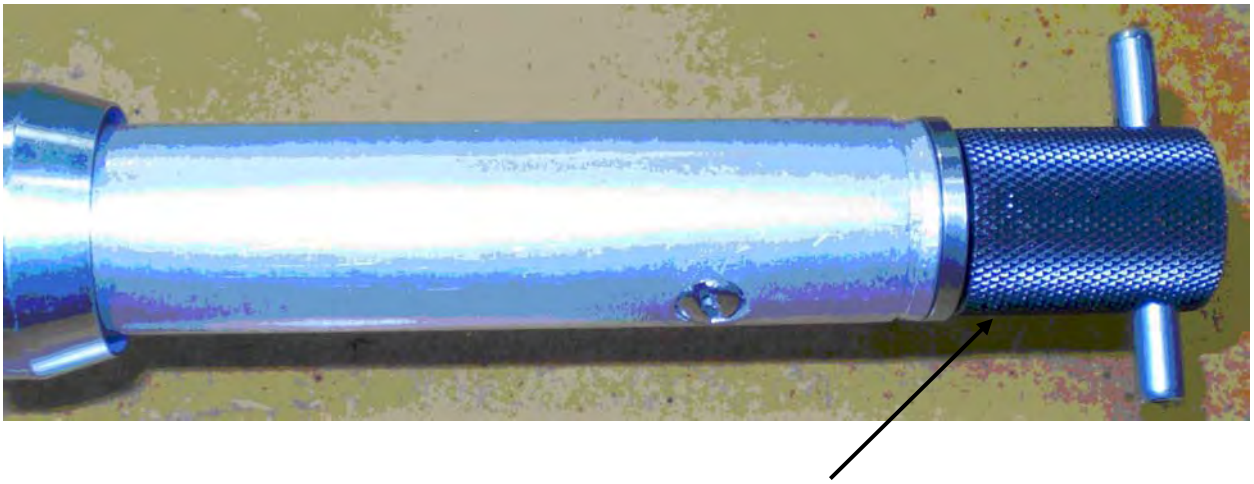

Plug properly inserted into nozzle spout.
Both plug o-rings seated into nozzle spout.

FIGURE 3
Recommended FUNNEL SPECIFICATIONS

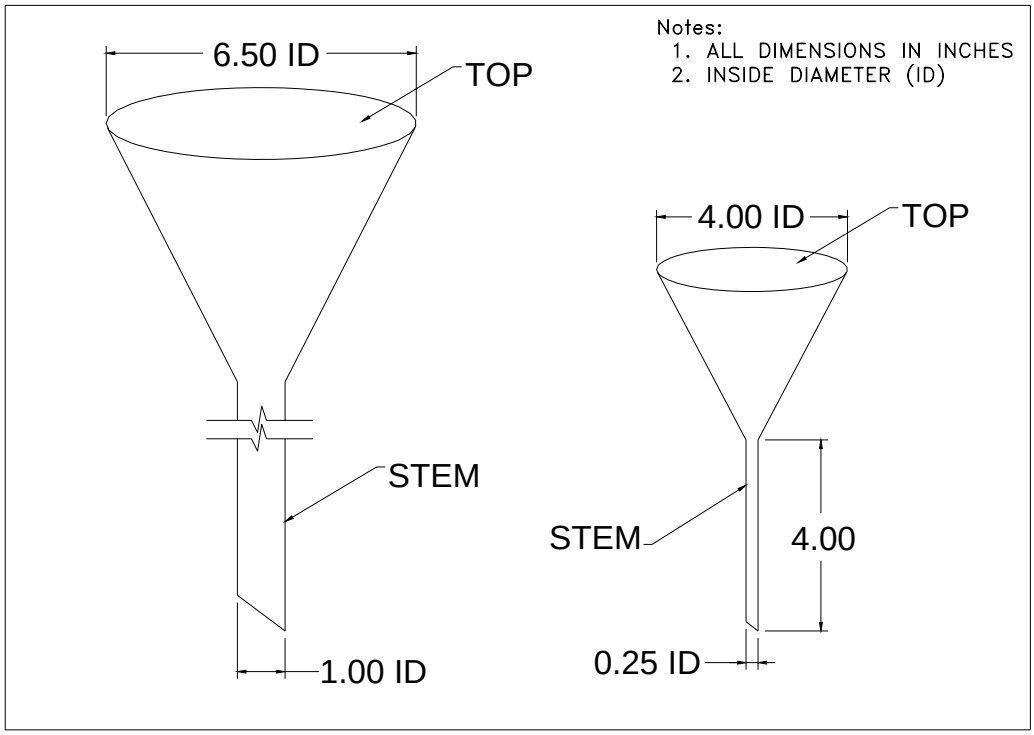

FORM 1: LIQUID REMOVAL TEST DATA SHEET (OPTION 1)

Facility Name & Address	Facility Representative & Title
	Phone No.

Test Date	
A/C or Permit No.	
Testing Company	
Tester Name	
VST Training Cert # (if applicable)	
Inspector Name	

GENERAL INFORMATION				PRE-TEST	TEST RUN					VR=(VI-VF)/G
Dispenser Number	Product Grade	Make & Model of Hose	Serial Number of Hose	Volume Drained From Hose in mL	Volume Poured Into Hose in mL (VI)	Gallons Dispensed (G)	Seconds to Dispense (T)	Dispensing Rate (60*(G/T))	Volume Remaining in mL (VF)	Liquid Removal Rate (mL/gal)

FORM 2: LIQUID REMOVAL TEST DATA SHEET (OPTION 2)

Facility Name & Address	Facility Representative & Title
	Phone No.

Test Date	
A/C or Permit No.	
Testing Company	
Tester Name	
VST Training Cert # (if applicable)	
Inspector Name	

GENERAL INFORMATION				PRE-TEST	TEST RUN					VR=((VI-VW)-VF)/G
Dispenser Number	Product Grade	Make & Model of Hose	Serial Number of Hose	Volume Poured into Hose in mL (VI)	Gallons Dispensed (G)	Seconds to Dispense (T)	Dispensing Rate (60*(G/T))	Volume Remaining in mL (VF)	Volume Lost to Wall Adhension in mL (VW)	Liquid Removal Rate (mL/gal)

Executive Orders VR-203-C and VR-204-C
VST Phase II EVR System

Exhibit 6

Hydrocarbon Sensor Verification Test

Definitions common to all certification and test procedures are in:

D-200 Definitions for Vapor Recovery Procedures

For the purpose of this procedure, the term "ARB" refers to the State of California Air Resources Board, and the term "ARB Executive Officer" refers to the Executive Officer of the ARB or his or her authorized representative or designate.

1. PURPOSE AND APPLICABILITY

1.1 This procedure will determine the accuracy of the VST Hydrocarbon (HC) Non-Dispersive Infrared sensor (HC sensor) using known hydrocarbon concentrations (propane) calibration gases at gasoline dispensing facilities (GDFs).

1.2 This procedure is applicable for compliance testing.

2. PRINCIPLE AND SUMMARY OF TEST PROCEDURE

Known concentrations of certified calibration gases are passed through the HC sensor as illustrated in Figure 1, and then compared with the HC average concentration as determined from the PMC Percent Hydrocarbon Diagnostic Report. The Percent Hydrocarbon Diagnostic report can be downloaded on to a laptop computer via the TLS-350 RS-232 connection. Sampling is conducted for a minimum of a five (5) minute period for each certified test gas. To prevent any HC sensor biases, this test shall be conducted with the processor in the manually turned “off” mode from the TLS-350 control panel for the duration of the test. This test can be performed while product is being dispensed into motor vehicles.

3. EQUIPMENT AND SUPPLIES

3.1 Gas Cylinder Regulator

Use a two stage pressure regulator with gauges indicating cylinder pressure and supply line pressure. Supply line pressure shall be set between 5 and 10 pounds per square inch gauge (psig).

3.2 Flow Meter

Use a Dwyer Model RMA, or equivalent flow meter capable of reading a gas flow rate at one (1) liter per minute (LPM).

3.3 Calibration Gases

Cylinders of calibration gases using propane in nitrogen listed below.

(1) High-Range Gas: Concentration between 10-14% by volume.
(2) Mid-Range Gas: Concentration between 2-5% by volume.
(3) Zero Gas: Nitrogen with a hydrocarbon concentration less than 0.25% by volume.

3.4 Laptop, associated cables, and software are required for RS232 connection to the TLS-350 (reference Section 16 “Pressure Management Control” of the ARB Approved Installation, Operation and Maintenance Manual for hardware and software requirements).

4. CALIBRATIONS

The calibration gases must be certified according to the following:

To an analytical accuracy of ± 2%, traceable to a reference material approved by the National Institute of Standards and Technology (NIST) and recertified at least every two years.

Information on calibration gas cylinders shall be entered into a log identifying each cylinder by serial number. Documentation of certification shall be maintained with the gas cylinders at all times and shall also be attached to Form 1. The calibration gas log shall be maintained with the gas cylinders at all times and made readily available to the district upon request. Sufficient information shall be maintained to allow a determination of the certification status of each calibration gas and shall include: (1) the date put in service, (2) assay result, (3) the dates the assay was performed, and (4) the organization and specific personnel who performed the assay.

5. PRE-TEST REQUIREMENTS

Install all required testing apparatus as illustrated in Figure 1 and Figure 2. Connect the calibration test gas to the inlet tee of the HC sensor. Install the outlet tubing to the HC sensor outlet tee. This tubing is used to vent of the calibration gas to atmosphere.

6. TEST PROCEDURE

6.1 Manually turn off the VST membrane processor as follows:

6.1.1 On the TLS Console front panel, use the ‘mode key’ to scroll to ‘DIAG MODE’ and then use the function and step keys, as shown in Figure 3 to view the ‘VAPOR PROCESSOR MODE’ menu.

6.1.2 From the ‘VAPOR PROCESSOR MODE‘ menu, change the vapor processor mode of operation from automatic to manual mode. From the ‘VAPOR PROCESSOR STATE’ menu, verify the VP STATE is in the “off” mode. The processor shall be in the off mode for the duration of the test.

6.2 Record the start time from the TLS-350, on Form 1. The testing technician shall synchronize his/her watch with the clock on the TLS-350.

6.3 Isolate the VST HC sensor by closing the in-line ball valve upstream of the HC sensor.

6.4 Introduce the zero, mid-range and high-range gases, in that order, into the VST HC sensor sample line at a flow of 1 LPM for five continuous minutes.

6.5 Record the time before and at the end of each five minute test run on Form 1. Districts may require the use of an alternate form, provided it includes the same minimum parameters as identified in Form 1.

6.6 From the TLS-350 front panel, return the membrane processor to the automatic run mode.

6.7 Press the <MODE> key to leave the 'PMC DIAGNOSTIC' menu.

6.8 Disconnect test apparatus from the VST HC sensor inlet and outlet tees and replace plugs. Return the in-line ball valve to the open position.

7. OBTAIN HC DATA FROM PMC

The HC data can be obtained from the PMC via an RS-232 connection to a laptop computer. Once connected, the HC data can be viewed from the "Percent Hydrocarbon Diagnostic Report". This report can be printed or saved to a file. A printed copy of this report must be attached to Form 1. Instructions on accessing this report via the RS-232 connection are found in Section 16 "Pressure Management Control" of the ARB Approved Installation, Operation, and Maintenance Manual. This report will provide HC concentration readings at 15 second intervals for each of the 5-minute test runs. Calculate the average HC concentration from the **last three minutes of each test run** and record on Form 1.

8. CALCULATION

Calculate and record the difference between the average HC concentration from the PMC Percent Hydrocarbon Diagnostic Report (Step 7) and compare with each corresponding calibration gas concentration.

Difference = (Calibrations Gas Concentration (Step 3.3)) – (Average HC Concentration from PMC (Step 7))

The difference shall be within ±1.0% HC concentration from the calibration gas for each of the three gases. Record "Pass" if within ±1.0% or "Fail" if not within ±1.0% on Form 1. If any failure is recorded, the VST ECS Processor is not in compliance with Exhibit 2.

9. ALTERNATIVE TEST PROCEDURES

This procedure shall be conducted as specified. Modifications to this test procedure shall not be used to determine compliance unless prior written approval has been obtained from the ARB Executive Officer, pursuant to Section 14 of Certification Procedure CP-201.

Figure 1
Equipment Configuration for Verifying Hydrocarbon Sensor Performance

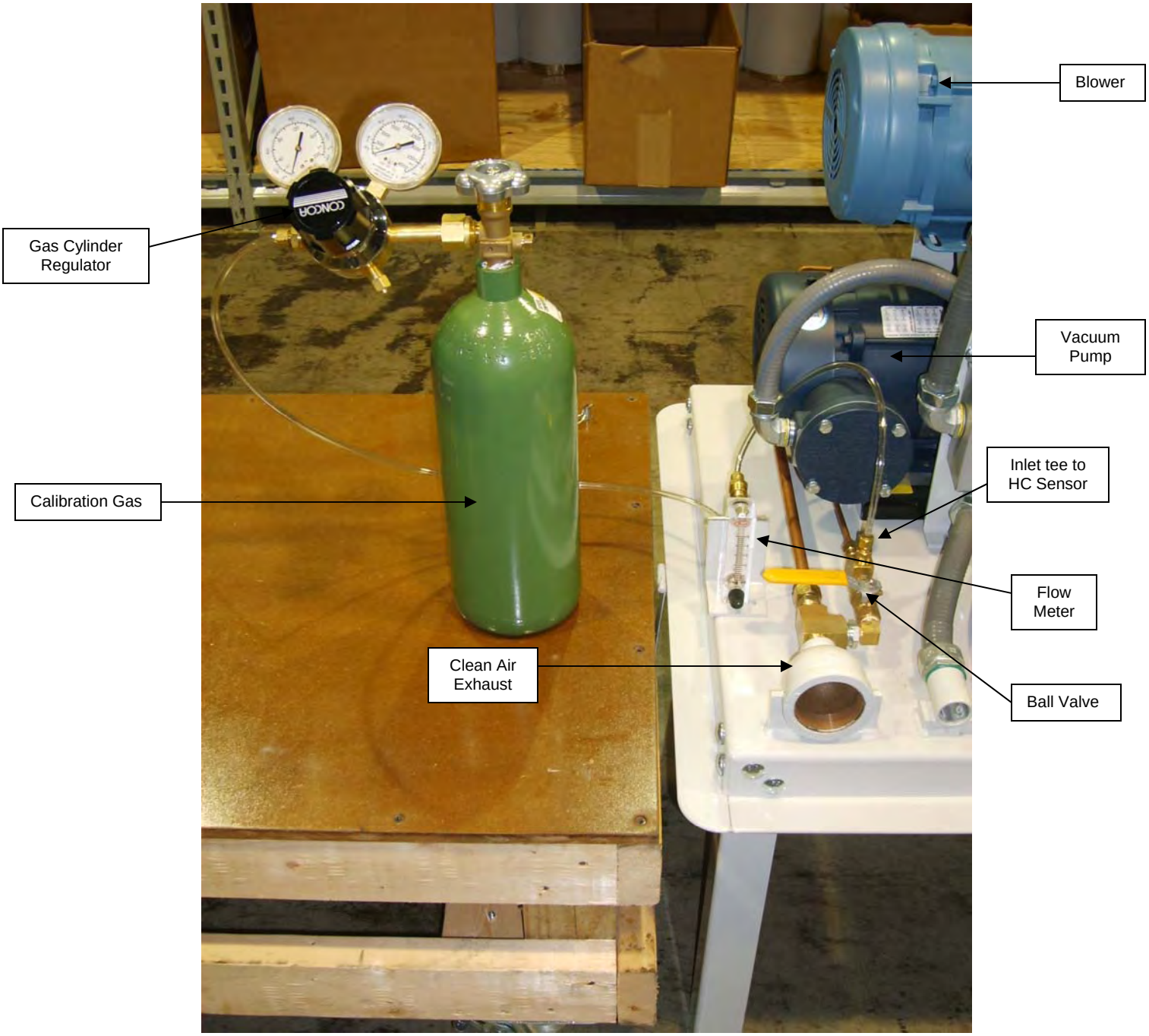

Figure 2
Equipment Configuration for Verifying Hydrocarbon Sensor Performance

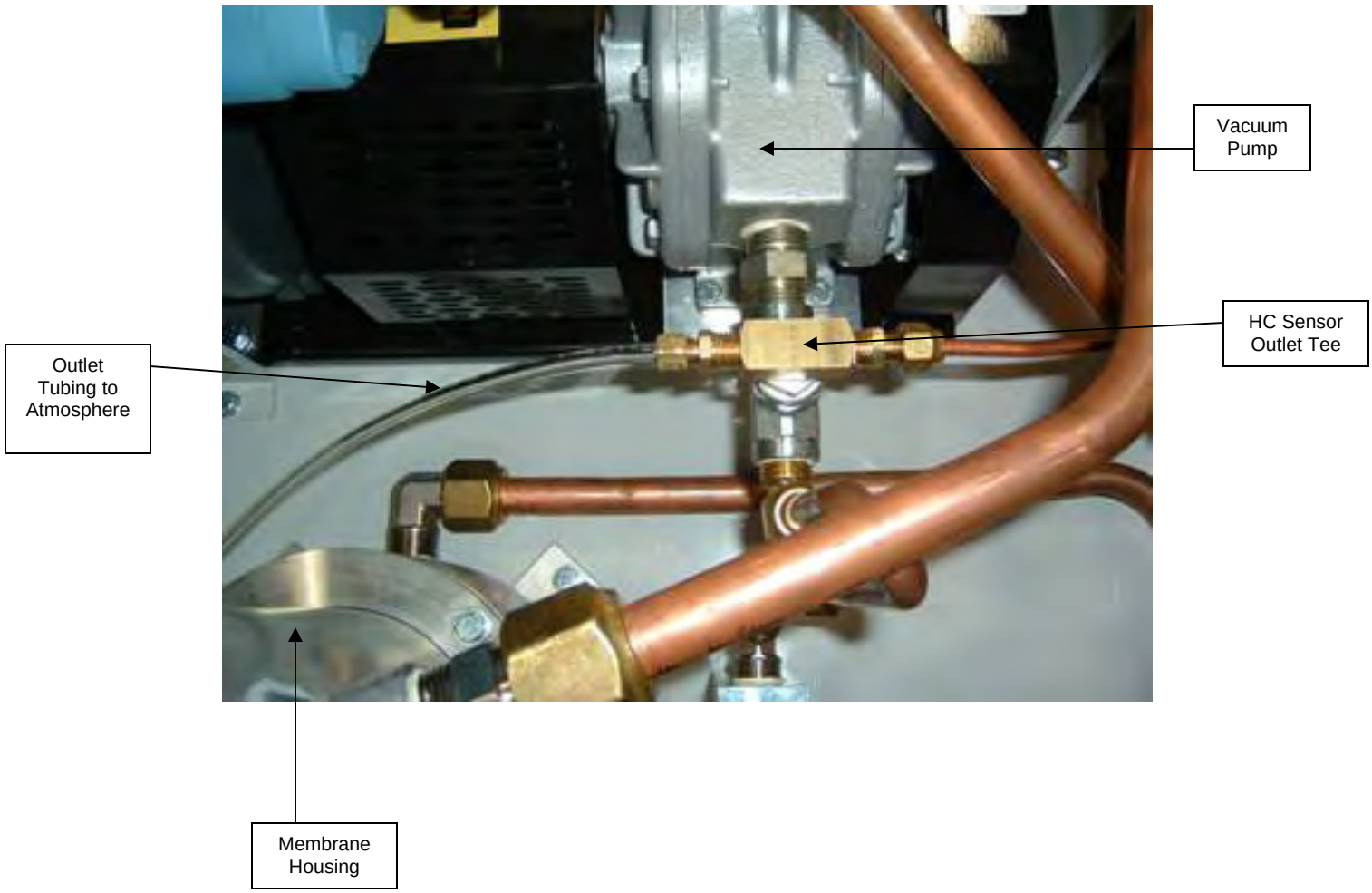

Figure 3

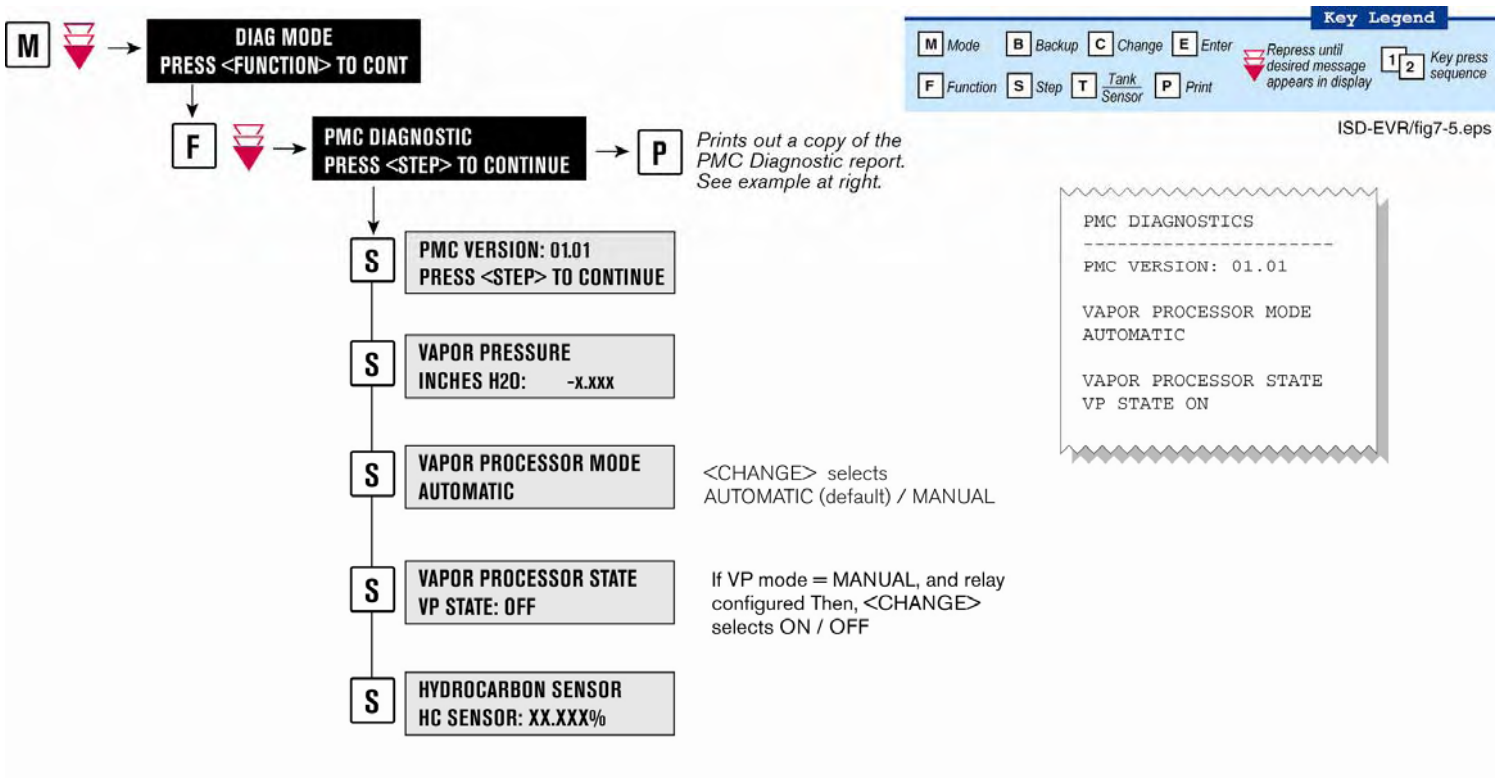
M
DIAG MODE
PRESS <FUNCTION> TO CONT
F
PMC DIAGNOSTIC
PRESS <STEP> TO CONTINUE
P
Prints out a copy of the PMC Diagnostic report. See example at right.
S
PMC VERSION: 01.01
PRESS <STEP> TO CONTINUE
S
VAPOR PRESSURE
INCHES H2O: -x.xxx
S
VAPOR PROCESSOR MODE
AUTOMATIC
<CHANGE> selects AUTOMATIC (default) / MANUAL
S
VAPOR PROCESSOR STATE
VP STATE: OFF
If VP mode = MANUAL, and relay configured Then, <CHANGE> selects ON / OFF
S
HYDROCARBON SENSOR
HC SENSOR: XX.XXX%
Key Legend
M Mode
B Backup
C Change
E Enter
F Function
S Step
T Tank Sensor
P Print
Repress until desired message appears in display
1 2 Key press sequence
ISD-EVR/fig7-5.eps
PMC DIAGNOSTICS
PMC VERSION: 01.01
VAPOR PROCESSOR MODE
AUTOMATIC
VAPOR PROCESSOR STATE
VP STATE ON

Form 1: Hydrocarbon Sensor Verification Data Sheet

Test Data Sheet for Performance Verification of VST NDIR Sensor	
Facility:	Test Company:
Address:	Test Personnel:
City:	VST or Veeder-Root Tech Certification # (as applicable)
State:	
Zip Code:	ICC or District Training Certification (as applicable)

Calibration Gas Concentration (% Propane). Note: Calibration gas information listed in Section 4 of Exhibit 6 shall be attached to this form.		
Zero Gas:	High-Range Gas:	Mid-Range Gas:
Serial #:	Serial #:	Serial #:

Test Results

Start Time	Stop Time	Calibration Gas Percent Concentration (Propane) (step 3.3	Average Percent HC Concentration from PMC (step 7)	Percent Difference (Difference shall be within ± 1%) (step 8)	Pass/Fail

Executive Order VR-203-C
VST Phase II EVR System

Exhibit 7
VST Phase II EVR System Warranty

This limited warranty is given by Vapor Systems Technologies, Inc. (hereinafter VST) to the purchaser of systems or products manufactured by it. VST products are warranted to be free from defect in material and workmanship under normal use, service, proper installation, and maintenance practices per manufacturer specifications.

VST warrants the materials and workmanship to be free from defects in accordance with the following provisions:

- This warranty will not apply to any products or systems that have:
    - been subject to misuse, abuse, tampering, negligence, accident, or drive off;
    - been misapplied, improperly installed, or not installed per VST's instructions or specifications;
    - been modified, altered, rebuilt or repaired by unauthorized persons or outside the criteria of VST specifications;
    - not been properly maintained in accordance with the system's or product's periodic maintenance schedule; or
    - been subject to damage resulting from acts of God.
- Use of VST products on non-UL systems or use that falls outside intended field of use voids any stated or implied warranty.
- The warranty for the material and workmanship of the systems or products extends to the purchaser and the duration of this warranty is TWELVE (12) MONTHS from the time of installation up to a maximum of EIGHTEEN (18) MONTHS from date of shipment, provided the Product Warranty Card is returned to VST. If the Product Warranty Card is not returned to VST, the warranty period is TWELVE (12) MONTHS from the date of shipment.
- VST warrants the material and workmanship of spare and/or replacements parts for NINETY (90) DAYS from the date of shipment.
- In the event of a warranty claim, the purchaser/distributor must obtain a copy of a Return Goods Authorization (RGA) from VST prior to returning product so as to insure proper processing. All warranty claim returns must be shipped freight prepaid by the purchaser/distributor.
- Warranty status will be determined upon inspection at VST's facility within THIRTY (30) DAYS of receipt of the warranted products. All returned merchandise deemed *Not Under Warranty*; will be held by VST for SEVEN (7) BUSINESS DAYS prior to disposal. Return of this product to the purchaser/distributor will require purchaser/distributor to issue a call tag within SEVEN (7) BUSINESS DAYS of notification.
- Repair or replacement of the warranted product is the **EXCLUSIVE REMEDY** under the terms of this warranty.
- This warranty does not cover any components exposed to contact with fuels containing greater than 5% methanol, 10% ethanol, or 15% MTBE by volume or any exposure to M85/E85 fuel.
- This warranty does not cover and VST is not liable for, incidental, consequential and/or indirect damages or loss including, but not limited to, personal injury,

death, property damage, environmental damage, cost of labor, clean-up, downtime, installation and removal, product damage, and loss of product, revenue or profits.

- VST is not liable for any claims or lawsuits against the purchaser/distributor.
- VST is not responsible for labor or materials necessary to disconnect or connect the warranted product for return to VST.
- Use of non-VST replacement parts, the unauthorized addition of non-VST items to equipment, and the unauthorized alteration of equipment and/or systems voids this warranty.
- VST, as to each defect, shall be relieved of all obligations and liabilities under this Limited Warranty if the vapor recovery system(s) or components have been operated with any accessory, equipment, or a part not specifically approved by VST, and not manufactured by VST to VST design and specification, or parts not specifically approved by CARB to be used with VST products.

THIS LIMITED WARRANTY IS EXCLUSIVE AND IS IN LIEU OF ALL OTHER WARRANTIES.

VST MAKES NO OTHER WARRANTIES (WHETHER WRITTEN OR ORAL), EXPRESS OR IMPLIED, INCLUDING BUT NOT LIMITED TO ANY IMPLIED WARRANTY OF MERCHANTABILITY, FITNESS FOR A PARTICULAR PURPOSE, OR OTHERWISE, AND ANY OTHER SUCH WARRANTIES ARE HEREBY DISCLAIMED.

VST NEITHER ASSUMES NOR AUTHORIZES ANY OTHER PERSON OR ENTITY TO ASSUME FOR IT OR BIND IT TO ANY OTHER LIABILITY OR OBLIGATION RELATED TO OR IN CONNECTION WITH THIS LIMITED WARRANTY.

VST products should be used in compliance with applicable federal, state, and local laws and regulations.

VST reserves the right to make changes at any time to prices and designs, or make additions or improvements with respect to its products, without incurring any obligation to modify or install same on previously manufactured products.

Vapor Systems Technologies, Inc.
Phone: (937)-704-9333 • Fax: (937)-704-9443
www.vsthose.com

IMPORTANT
PRODUCT WARRANTY
REGISTRATION CARD

12 MONTH WARRANTY BECOMES EFFECTIVE AT TIME OF INSTALLATION. IF THIS CARD IS NOT RETURNED, WARRANTY BECOMES EFFECTIVE FROM DATE OF SHIPMENT FROM VST.

THE MAXIMUM WARRANTY LIFE IS 18 MONTHS FROM DATE OF SHIPMENT.

PLEASE CALL VST IF THIS PRODUCT IS BEING USED AS A REPLACEMENT. REPLACEMENT WITH A NON VST PRODUCT VOIDS ANY WARRANTY.

SERIAL NUMBER:
INSTALLATION DATE:
INSTALLATION SITE:
CITY/STATE/ZIP:
DISTRIBUTOR NAME:
PRODUCT STYLE
☐ HOSE ☐ SAFETY BREAKAWAY
☐ NOZZLE ☐ ECS PROCESSOR

Warranty and Testing Stickers for Balance EVR Products

- VST will continue to use individual tracking serial numbers on every product shipped (nozzle, hose, safety breakaway, and membrane processor).
- VST will continue to include a warranty card with every product shipped.
- VST will attach additional **NOTICE** stickers to the EVR balance-style products.

Nozzle

- A florescent colored sticker will be placed over the threaded area of the nozzle where the hose is to be attached.
- This sticker will include the following text:

NOTICE: The nozzle was factory tested to and met all applicable performance standards & specifications to which it was certified: E.O. VR-203 and UL Standard 842

WARRANTY: 12-month warranty becomes effective at time of installation upon VST receipt of warranty card. If the warranty card is not returned to VST, the warranty becomes effective from VST's shipment date. The maximum warranty life is 18 months from date of shipment. Please call VST if this product is being used as a replacement. Replacement with a non-VST product voids any warranty.

CARB TEST # TP201.2B, TP201.2C, TP201.2D, TP201.2J and Exhibits 2, 3, 5, 10

Safety Breakaway

- A florescent colored sticker will be placed over one of the threaded ports of the breakaway.
- This sticker will include the following text:

NOTICE: This breakaway was factory tested to and met all applicable performance standards & specifications to which it was certified: E.O. VR-203 and UL Standard 567

WARRANTY: 12-month warranty becomes effective at time of installation upon VST receipt of warranty card. If the warranty card is not returned to VST, the warranty becomes effective from VST's shipment date. The maximum warranty life is 18 months from date of shipment. Please call VST if this product is being used as a replacement. Replacement with a non-VST product voids any warranty.

CARB TEST # TP201.2J and Exhibits 2, 3

Hose

- A florescent colored sticker will be placed on the hose.
- This sticker will include the following text:

NOTICE: This hose was factory tested to and met applicable performance standards & specifications to which it was certified: E.O. VR-203 and UL Standard 330

WARRANTY: 12-month warranty becomes effective at time of installation upon VST receipt of warranty card. If the warranty card is not returned to VST, the warranty becomes effective from VST's shipment date. The maximum warranty life is 18 months from date of shipment. Please call VST if this product is being used as a replacement. Replacement with a non-VST product voids any warranty.

Processor

- A florescent colored sticker will be placed on the processor.
- This sticker will include the following text:

NOTICE: This processor was factory tested to and met all applicable performance standards & specifications to which it was certified: E.O. VR-203 and UL Standard 79

WARRANTY: 12-month warranty becomes effective at time of installation upon VST receipt of warranty card. If the warranty card is not returned to VST, the warranty becomes effective from VST's shipment date. The maximum warranty life is 18 months from date of shipment. Please call VST if this product is being used as a replacement. Replacement with a non-VST product voids any warranty.

CARB TEST # Exhibits 3, 6, 8, 9

Executive Orders VR-203-C and VR-204-C
VST Phase II EVR System

Exhibit 8
Vapor Pressure Sensor Verification Test

Definitions common to all certification and test procedures are in:

D-200 Definition for Vapor Recovery Procedures

For the purpose of this procedure, the term "ARB" refers to the California Air Resources Board, and the term, "ARB Executive Officer" refers to the Executive Officer of the ARB or his or her authorized representative or designee.

1. Purpose and Applicability

1.1 The purpose of this test procedure is to determine if the Pressure Management Control (PMC) Vapor Pressure Sensor (listed in Exhibit 1) is operating in accordance with the pressure sensor requirements of Exhibit 2. This procedure is used:

1.1.1 To determine the measured ullage pressure in underground gasoline storage tanks (USTs) installed at gasoline dispensing facilities (GDFs) equipped with a VST Phase II enhanced vapor recovery system and compare to the pressure reading of the PMC at the TLS console.

1.1.2 To determine whether the Vapor Pressure Sensor complies with the performance specification when the sensor is exposed to ambient pressure.

1.2 This procedure is applicable for compliance testing.

2. Principle and Summary of Test Procedure

Determining UST Pressure - The pressure of the USTs is determined at the Phase I vapor recovery adaptor (dry break assembly) with a vapor coupler test assembly as shown in Figures 2 and 3 of TP-201.3 (*Determination of 2 Inch WC Static Pressure Performance of Vapor Recovery Systems of Dispensing Facilities*) or a modified dust cap test assembly as shown in Figures 8-1 and 8-2 of this exhibit. The test assembly is equipped with a center probe, which opens the dry break, and a quick connect fitting that is connected to an electronic pressure measuring device or digital manometer. The test assembly should open the dry break with minimal venting of the USTs. This test can be performed while product is being dispensed into motor vehicles.

Determining Ambient Pressure - The Vapor Pressure Sensor is subjected to ambient pressure by turning the Vapor Pressure Sensor valve, which is located in the dispenser closest to the tanks, to the Atmospheric Valve Position as shown in Figure 8-3. This test can be performed while product is being dispensed into motor vehicles.

3. Biases and Interferences

3.1 This test shall not be conducted within 30 minutes following gasoline transfer from a cargo tank.

3.2 This test shall not be conducted if the processor is operating (audible indication that the processor is running).

4. Range and Accuracy

Electronic Pressure Measuring Device such as a digital manometer

Minimum readability shall be 0.01 inches WC with measurement range(s) to include at least up to positive and negative ten (±10) inches WC with a minimum accuracy of plus or minus 0.05 inches WC of full scale.

5. Equipment

5.1 The dust cap test assembly shall be modified in the following manner:

5.1.1. Install a probe in the center of the dust cap as shown in Figure 8-1 (one method is to tap and thread probe). The probe shall be of sufficient length to open approximately ½ inch of the dry break while allowing the cap to maintain a leak tight seal on the adaptor.

5.1.2. Install female quick connect fitting on the top of the dust cap, offset from the center probe as shown in Figure 8-1. A Swagelok, part number SS-QC4-B-4-PM, quick connect fitting or equivalent can be used.

5.1.3. Use “Tygon tubing” or equivalent to connect the manometer to the dust cap (Figure 8-2). Install a male quick connect fitting (Swagelok part number SS-QC4-5-400 or equivalent can be used) on one end of a ferrule stainless steel tube (or equivalent material). Connect one end of the “Tygon tubing” to the stainless steel tube and connect the other end to the digital manometer (Figure 8-2).

5.2 Alternatively, the vapor coupler test assembly, Figures 2 and 3 of TP-201.3 may be used in lieu of the dust cap test assembly.

5.3 Digital Manometer (Electronic Pressure Measuring Device)

Use a minimum range ±10.00 inches WC digital manometer to monitor the UST pressure with a minimum readability of 0.01 inches of WC. Dwyer Series 475 Mark III Digital manometer or equivalent can be used. A copy of the manufacturer’s operating instructions shall be kept with the equipment.

6 Calibration Requirements

6.1 A copy of the most current calibration of the electronic pressure measuring device shall be kept with the equipment.

6.2 All electronic pressure measuring devices shall be bench tested for accuracy using a reference gauge, incline manometer or National Institute of Standards and Technology (NIST) traceable standard at least once every twelve (12) consecutive months. Accuracy checks shall be performed at a minimum of five (5) points (e.g., 10, 25, 50, 75 and 90 percent of full scale) each for both positive and negative pressure readings. Accuracy shall meet the requirements of Section 4.

Determining UST Pressure

7 Pre-Test Procedure

7.1 Turn on digital manometer and allow instrument to warm up for five minutes.

7.2 Zero out digital manometer using adjustment pod on top of instrument in accordance with manufacturer's instructions. Drift may be minimized by re-zeroing immediately after use by venting both pressure ports to atmosphere and adjusting the knob until the display reads exactly zero.

7.3 Attach the male quick connect fitting to the female quick connect fitting on the modified vapor dust cap.

7.4 Attach digital manometer to open end of Tygon tubing.

8 Test Procedure

8.1 Attach the dust cap or vapor coupler test assembly to the vapor adaptor (Figure 8-2).

8.2 On the TLS Console front panel, use the 'mode key' to scroll to "DIAG MODE" then use the function and step keys, as shown in Figure 8-4 to view the current pressure value.

8.3 Simultaneously record the ullage pressure from the digital manometer (connected to the vapor coupler test assembly) and the TLS Console. Record the above information on Form 1 "Data Form for Vapor Pressure Sensor UST Pressure Test." Districts may require the use of an alternate form, provided it includes the same minimum parameters as identified in the Data Form.

8.4 Verify that the pressure reading from the TLS Console is within ±0.2 inches WC from the digital manometer reading. If difference is not within ±0.2 inches WC, the pressure sensor is not in compliance with the pressure sensor requirements of Exhibit 2.

8.5 Press the <MODE> key to leave the 'PMC DIAGNOSTIC' menu

Determining Ambient Pressure

9 Test Procedure for Testing Sensor Under Ambient Pressure

9.1 Access the Vapor Pressure Sensor, which is located in the dispenser closest to the tanks. Record which dispenser contains the pressure sensor and the pressure sensor serial number on the data form.

9.2 Remove the cap from the ambient reference port of the Vapor Pressure Sensor valve and open the valve to atmosphere by turning it 90 degrees so that the flow arrows point to both the Vapor Pressure Sensor sensing port and the ambient reference port (see Figure 8-3).

9.3 On the TLS Console front panel, use the ‘mode key’ to scroll to “DIAG MODE” then use the function and step keys, as shown in Figure 8-4 to view the current pressure value.

9.4 Verify that the pressure value is between +0.2 and -0.2 inches WC. If the pressure value is not within this range, the pressure sensor is not in compliance with the pressure sensor requirements of Exhibit 2.

9.5 Replace the cap on the ambient reference port of the Vapor Pressure Sensor valve. Restore the Vapor Pressure Sensor valve by turning it 90 degrees so that the flow arrows point to both the Vapor Pressure Sensor sensing port and the UST vapor space sensing line (ref. Figure 8-3).

9.6 Press the <MODE> key to leave the ‘PMC DIAGNOSTIC’ menu.

9.7 Record the above information on Form 2 “Data Form for Vapor Pressure Sensor Ambient Reference Test.” Districts may require the use of an alternate form, provided it includes the same minimum parameters as identified in the Data Form.

10 Alternate Procedures

This procedure shall be conducted as specified. Any modifications to this test procedure shall not be used unless prior written approval has been obtained from the ARB Executive Officer, pursuant to Section 14 of CP-201.

Figure 8-1 - Typical Modified Vapor Adaptor Dust Cap (Bottom View)

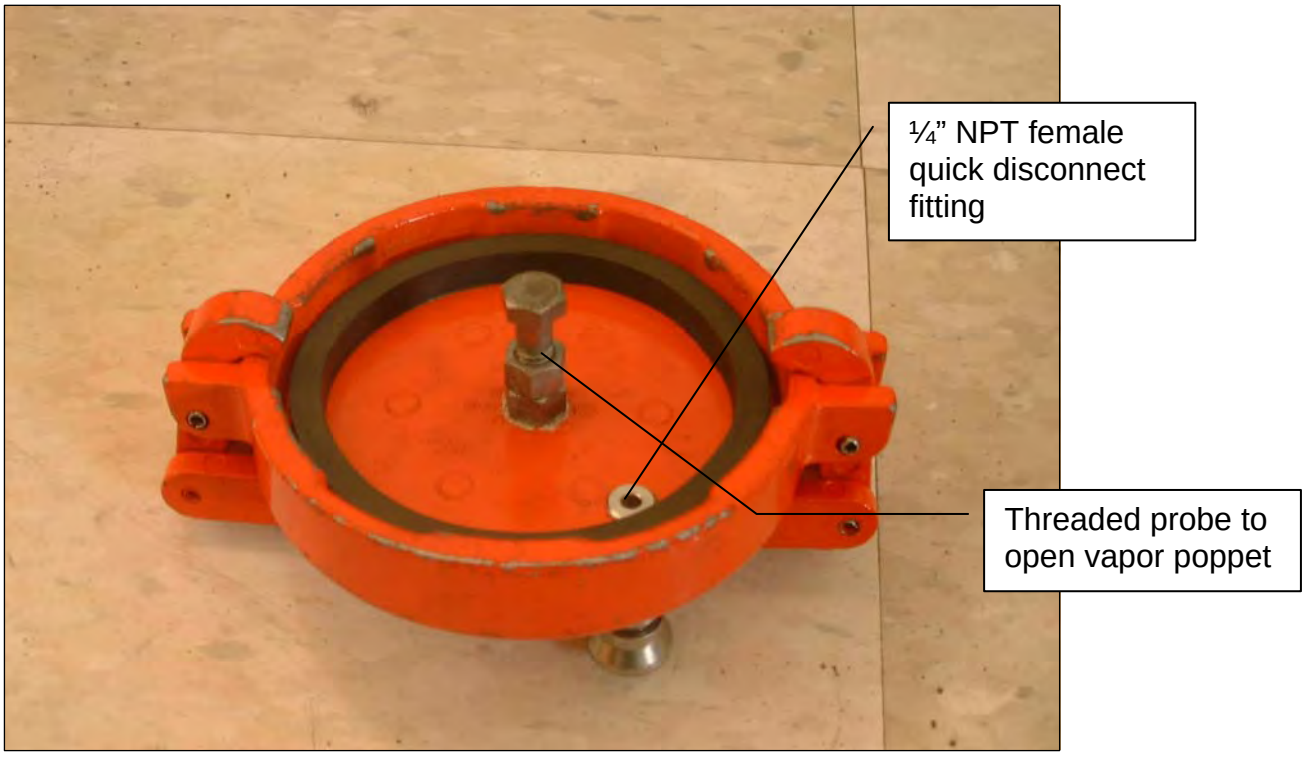

Figure 8-2 - Typical Field Installation of UST Pressure Measurement Assembly

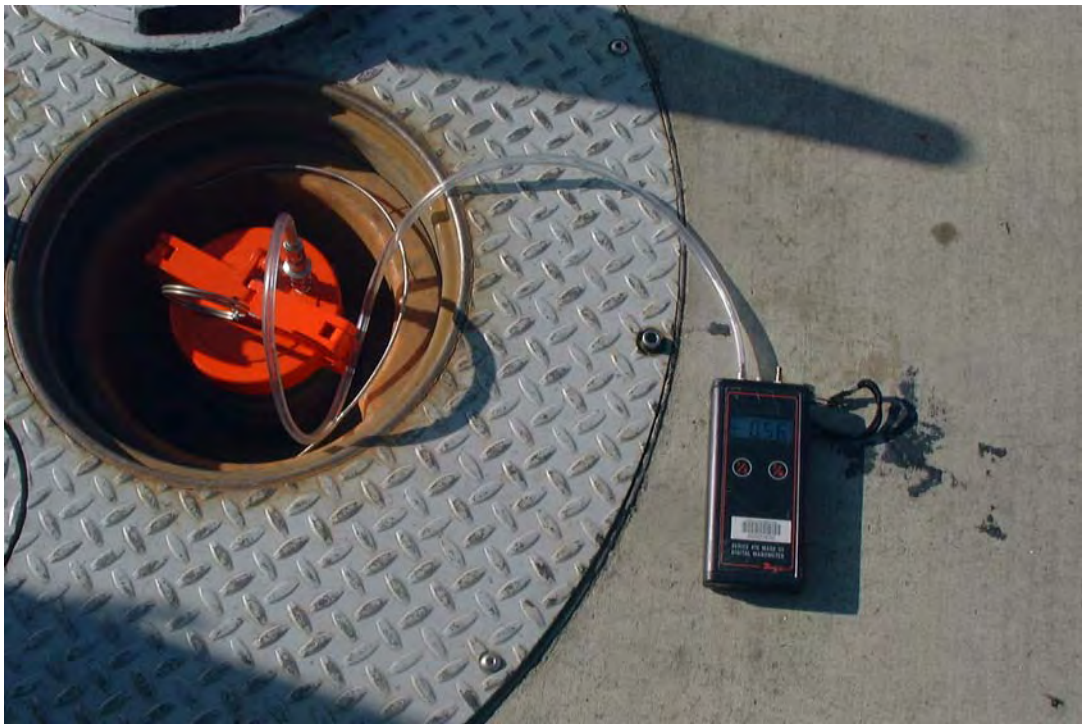

Figure 8-3
Vapor Pressure Sensor Valve Position

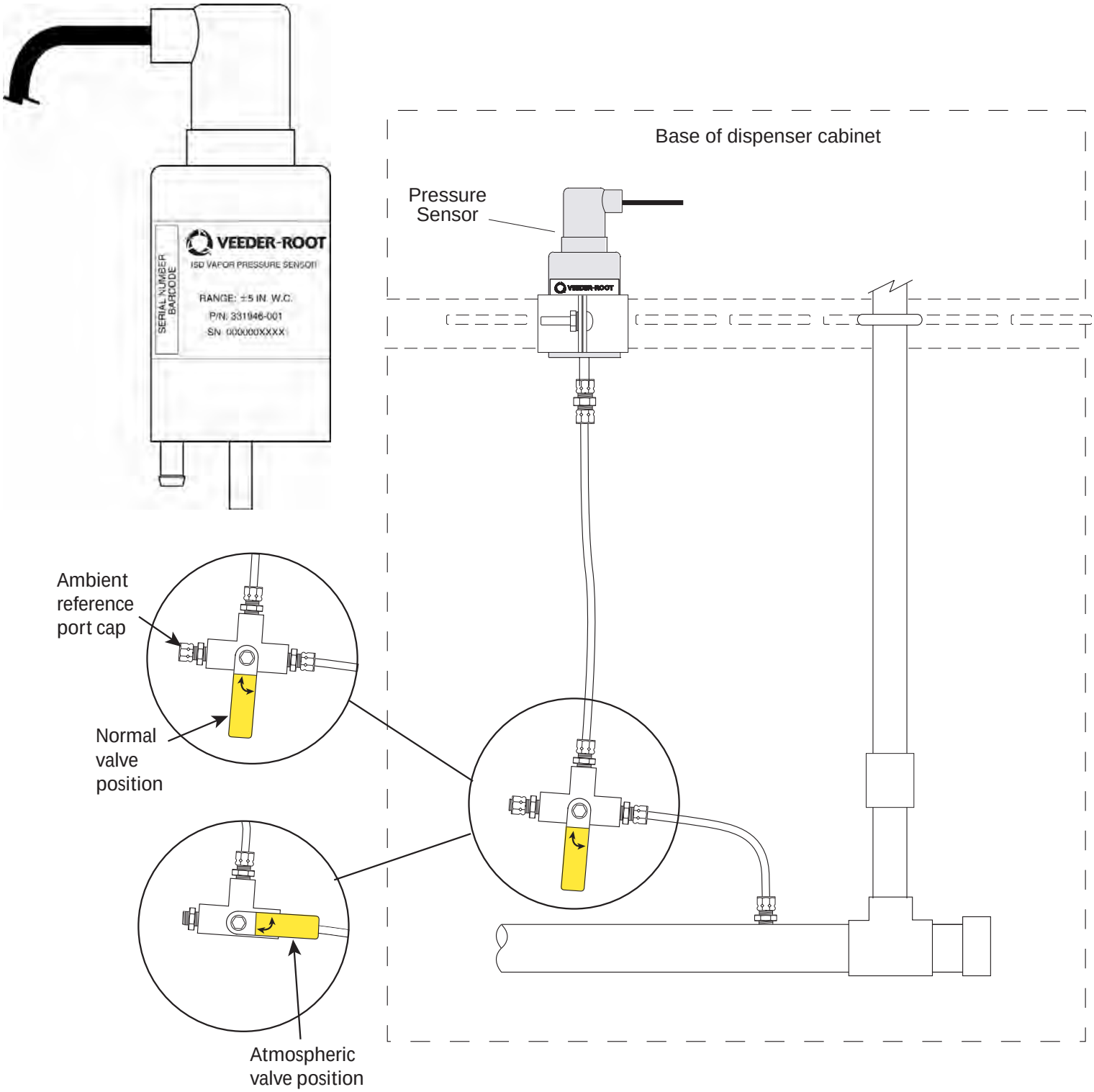

Figure 8-4
Accessing the Vapor Pressure Sensor Reading

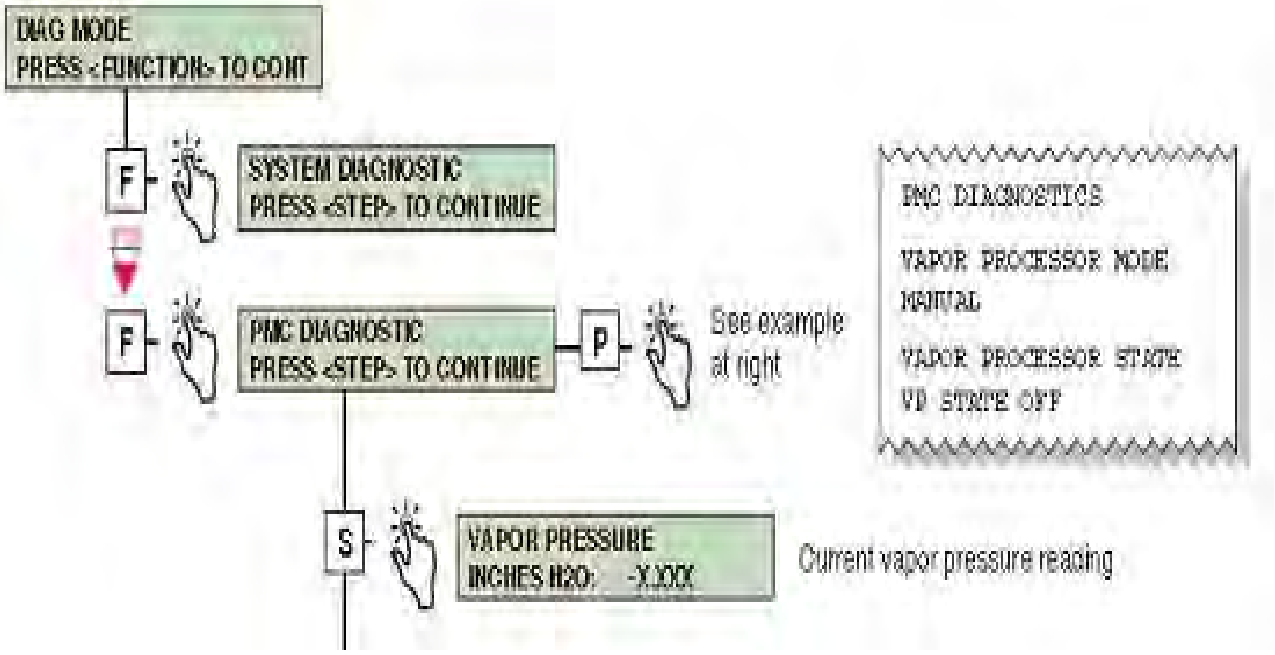

Form 1

Data Form for Vapor Pressure Sensor UST Pressure Test

DATE OF TEST _____

SERVICE COMPANY NAME	SERVICE COMPANY'S TELEPHONE
SERVICE TECHNICIAN	VST or VEEDER-ROOT TECH CERTIFICATION # (as applicable) ICC or DISTRICT TRAINING CERTIFICATION (as applicable)
STATION NAME	DISTRICT PERMIT #
STATION ADDRESS CITY	STATE ZIP

PRESSURE SENSOR LOCATION: DISPENSER FUELING POINT (FP) NUMBERS	FP #_____	PRESSURE SENSOR SERIAL NUMBER: _____

STEP 8.3	DIGITAL MANOMETER VALUE _____ inches WC
STEP 8.3	TLS 350 SENSOR VALUE _____ inches WC (OBTAIN VALUE USING TLS CONSOLE KEYPAD SEQUENCE SHOWN IN FIG. 8-4, Vapor Pressure)
STEP 8.4	TLS 350 Sensor Value within ±0.2 inches WC of Digital Manometer Value? Yes ☐ No ☐ IF NO: THE PRESSURE SENSOR IS NOT IN COMPLIANCE WITH THE PRESSURE SENSOR REQUIREMENTS OF EXHIBIT 2.
STEP 8.5	MODE KEY PRESSED TO EXIT PMC DIAGNOSTIC MENU? ☐

Form 2

Data Form for Vapor Pressure Sensor Ambient Reference Test

DATE OF TEST _____

SERVICE COMPANY NAME		**SERVICE COMPANY'S TELEPHONE**	
SERVICE TECHNICIAN		**VST or VEEDER-ROOT TECH CERTIFICATION # (as applicable)** **ICC or DISTRICT TRAINING CERTIFICATION (as applicable)**	
STATION NAME		**DISTRICT PERMIT #**	
STATION ADDRESS	**CITY**	**STATE**	**ZIP**
STEP 9.1	**PRESSURE SENSOR LOCATION: DISPENSER FUELING POINT (FP) NUMBERS** **FP #** _____	**PRESSURE SENSOR SERIAL NUMBER:**_____	
STEP 9.2	**REFERENCE PORT CAP REMOVED?** ☐ **VALVE SET TO AMBIENT REFERENCE PORT (PER FIG. 8-3)?** ☐		
STEP 9.3	**NON-CALIBRATED SENSOR VALUE** _____**Inches WC** **(OBTAIN VALUE USING TLS CONSOLE KEYPAD SEQUENCE SHOWN IN FIG. 8-4, Vapor Pressure)**		
STEP 9.4	**PRESSURE BETWEEN +0.20 & -0.20?** **Yes** ☐ **No** ☐ **IF NO: THE PRESSURE SENSOR IS NOT IN COMPLIANCE WITH THE PRESSURE SENSOR REQUIREMENTS OF EXHIBIT 2.**		
STEP 9.5	**REFERENCE PORT CAP REPLACED?** ☐ **VALVE SET TO NORMAL VALVE POSITION (PER FIG 8-3)?** ☐		
STEP 9.6	**MODE KEY PRESSED TO EXIT PMC DIAGNOSTIC MENU?** ☐		

Executive Orders VR-203-C and VR-204-C
VST Phase II EVR System

Exhibit 9
Determination of
VST Processor Activation Pressure

Definitions common to all certification and test procedures are in:

D-200 Definition for Vapor Recovery Procedures

For the purpose of this procedure, the term "ARB" refers to the California Air Resources Board, and the term, "ARB Executive Officer" refers to the Executive Officer of the ARB or his or her authorized representative or designee.

1. Purpose and Applicability

1.1 The purpose of this test procedure is to determine compliance with the VST processor activation (e.g. turns on) pressure requirement of Exhibit 2.

1.2 This procedure is applicable for compliance testing.

2. Principle and Summary of Test Procedure

The UST pressure at which the VST membrane processor activates is determined by using a test assembly connected to the pressure sensor as shown in Figure 1 of this procedure (the pressure sensor is located in the dispenser closest to the tanks). The test assembly consists of an oral syringe (or other device capable of introducing low pressures up to approximately 0.5 inches WC) and an electronic pressure measuring device such as a digital manometer connected into a tee at the pressure sensor. This test can be performed while product is being dispensed into motor vehicles.

3. Range and Accuracy

Electronic Pressure Measuring Device (manometer). Minimum readability shall be 0.01 inches WC with measurement range(s) to include at least up to positive and negative ten (±10) inches WC with a minimum accuracy of plus or minus 0.05 inches WC of full scale.

4. Biases and Interference's

4.1 No transfer of gasoline from any cargo tanks to the USTs shall occur within three hours prior to conducting this test.

4.2 This test shall not be conducted if TP-201.3 was conducted within the last three hours.

4.3 This test shall not be conducted if the processor is operating (audible indication that the processor is running).

4.4 This test shall not be conducted if a "Run Time Default" is posted in the PMC RS232 Report. Instructions on accessing this report via the RS-232 connection

are found in Section 16 “Pressure Management Control” of the ARB Approved Installation, Operation, and Maintenance Manual

5. Equipment

5.1 Digital Manometer (Electronic Pressure Measuring Device)

Use a minimum range ±10.00 inches WC digital manometer to monitor the UST pressure with a minimum readability of 0.01 inches of WC. Dwyer Series 475 Mark III Digital manometer or equivalent can be used. A copy of the manufacturer’s operating instructions shall be kept with the equipment.

5.2 Oral Syringe (used in determining processor activation pressure)

Use a 3 cubic centimeter (cc) or 6cc oral syringe or equivalent that is capable of introducing air pressure at approximately 0.1 inches WC increments up to a maximum pressure of 0.5 inches WC (see Figure 1).

6 Calibration Requirements

6.1 A copy of the most current calibration of the electronic pressure measuring device shall be kept with the equipment.

6.2 All electronic pressure measuring devices shall be bench tested for accuracy using a reference gauge, incline manometer or National Institute of Standards and Technology (NIST) traceable standard at least once every twelve (12) consecutive months. Accuracy checks shall be performed at a minimum of five (5) points (e.g., 10, 25, 50, 75 and 90 percent of full scale) each for both positive and negative pressure readings. Accuracy shall meet the requirements of Section 3.

7 Pre-Test Procedure

7.1 Turn on digital manometer and allow instrument to warm up for five minutes.

7.2 Zero out digital manometer using adjustment pod on top of instrument in accordance with manufacturer’s instructions. Drift may be minimized by re-zeroing immediately after use by venting both pressure ports to atmosphere and adjusting the knob until the display reads exactly zero.

7.3 Prepare test assembly as shown in Figure 1. Lubricate seal of oral syringe plunger with petroleum jelly (or other lubricant). Use Tygon tubing (or equivalent) from the oral syringe (or equivalent) to the pressure sensor and to the digital manometer as shown in Figure 1. Plug or cap the end of the Tygon tubing (used to connect to the tee on the pressure sensor) and pressurize test assembly to approximately 2.0-5.0 inches WC for at least 5 seconds. There shall be no indications of vapor leaks when using liquid leak detection solution.

7.4 Remove the cap from the ambient reference port of the Vapor Pressure Sensor valve and connect the Tygon tubing (or equivalent) of the test assembly to the tee on the Vapor Pressure Sensor Valve as shown in Figure 1.

8 Test Procedure

8.1 Close the ball valve located at the tee to the pressure sensor to isolate the pressure sensor from the UST ullage (see Atmospheric Valve Position in Figure 2).

8.2 Slowly press the oral syringe (or equivalent) until a pressure of 0.10 inches WC is obtained. Maintain this pressure for at least 5 seconds. Does the VST membrane processor activate? If the membrane processor does not activate, continue increasing pressure at 0.1 inches WC intervals and hold for at least 5 seconds per interval or until the processor activates, up to a maximum pressure of 0.5 inches WC.

NOTE: Listen for audible indication that the processor activated (or turned on).

8.3 Record the VST membrane processor activation pressure on Form 1, Data Form for VST Processor Activation Pressure Test.

8.4 Verify that the processor activation pressure value is less than or equal to 0.4 inches WC. If the pressure value is not less than or equal to 0.4 inches WC, the VST processor is not in compliance with the activation pressure requirements of Exhibit 2.

8.5 Replace the cap on the ambient reference port of the Vapor Pressure Sensor valve. Restore the Vapor Pressure Sensor valve by turning it 90 degrees so that the flow arrows point to both the Vapor Pressure Sensor sensing port and the UST vapor space sensing line (see Normal Valve Position in Figure 2).

9 Alternate Procedures and Reporting Forms

9.1 This procedure shall be conducted as specified. Any modifications to this test procedure shall not be used unless prior written approval has been obtained from the ARB Executive Officer, pursuant to Section 14 of CP-201.

9.2 District may require the use of alternate forms, provided they include the same minimum parameters as identified in Form 1.

Figure 1: Typical Field Installation of Test Assembly for Determining VST Processor Activation

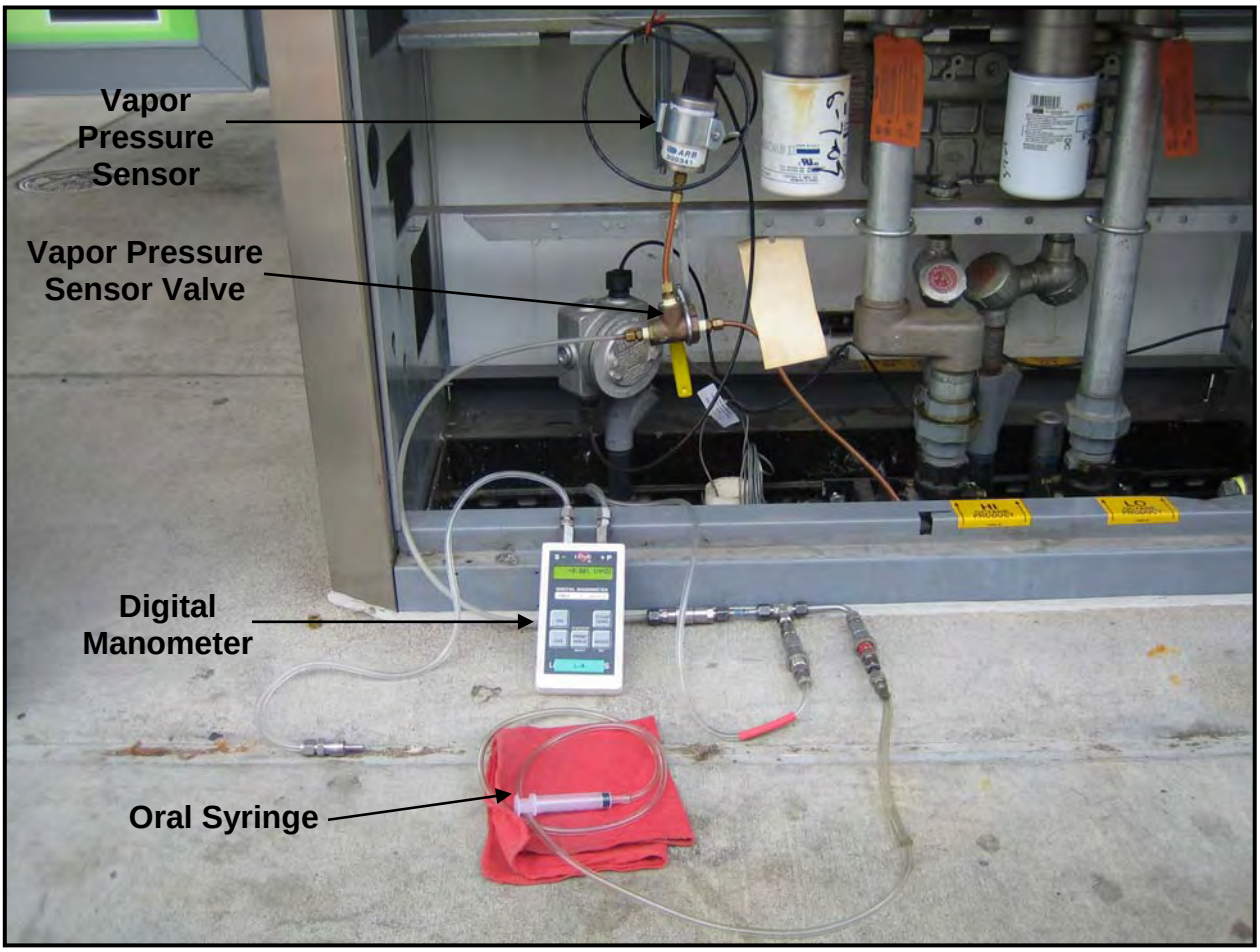

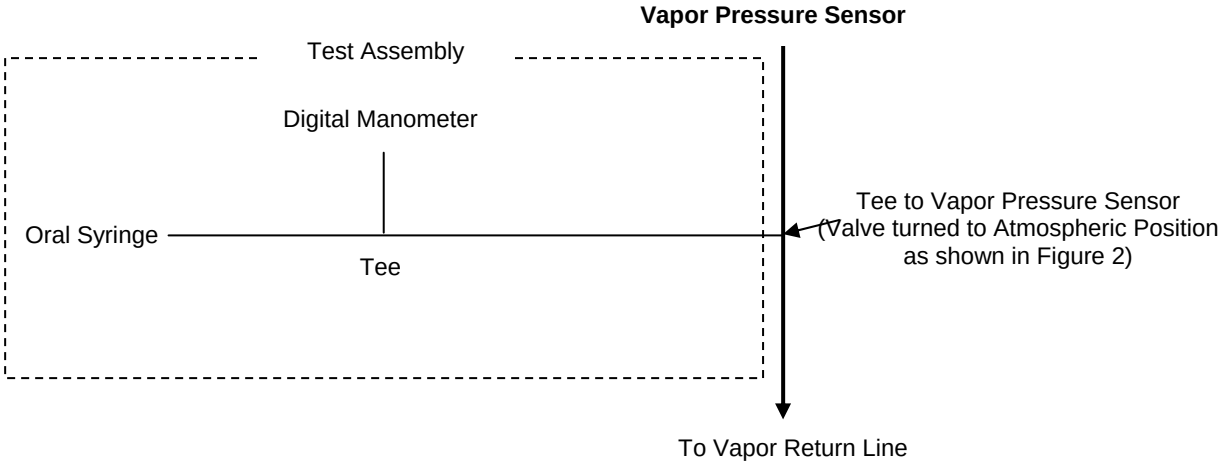

Figure 2: Vapor Pressure Sensor Valve Position

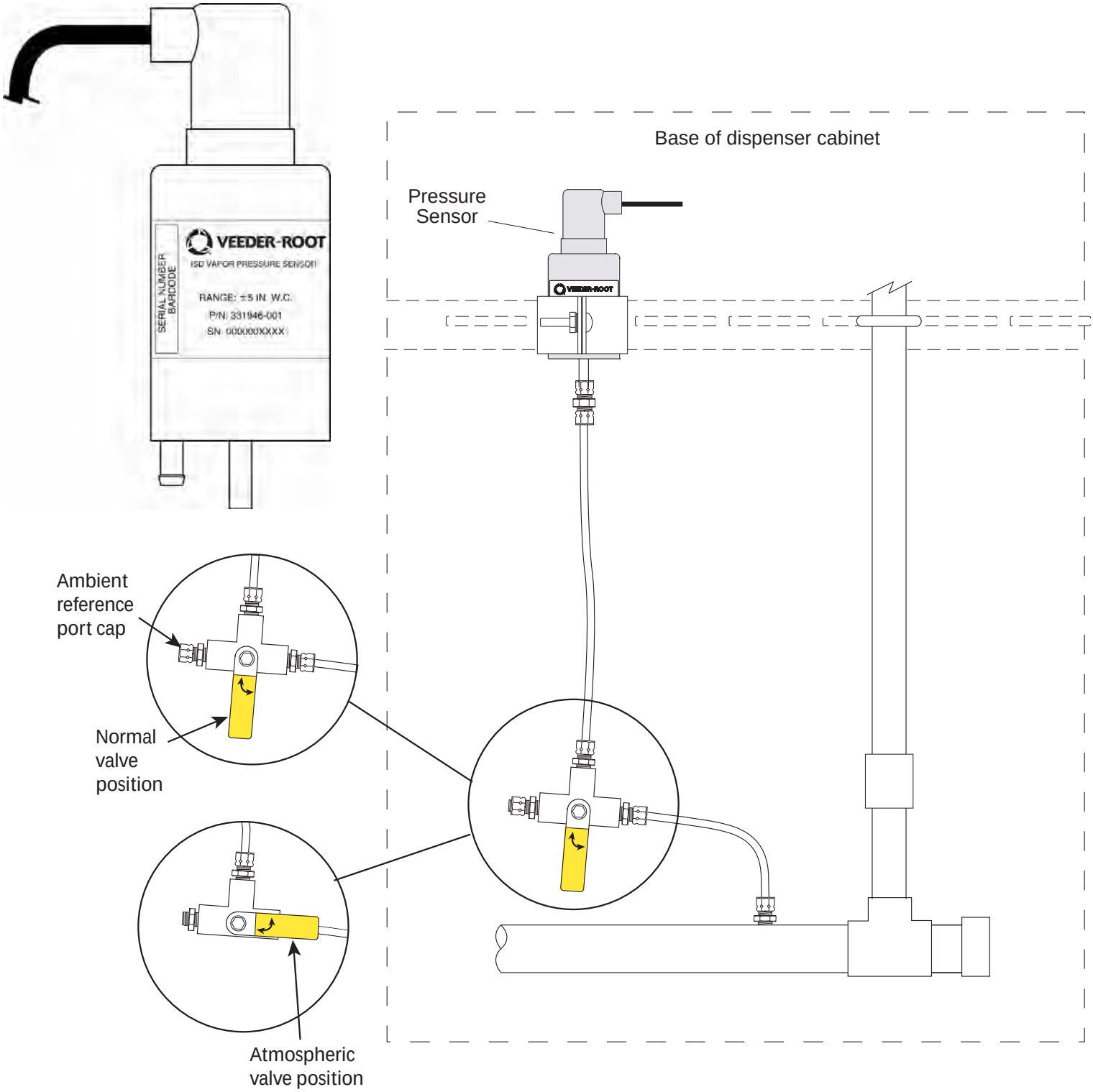

Form 1

Data Form for VST Processor Activation Pressure Test

DATE OF TEST _____

SERVICE COMPANY NAME	**SERVICE COMPANY'S TELEPHONE**
SERVICE TECHNICIAN	**VST or VEEDER-ROOT TECH CERTIFICATION # (as applicable)** **ICC or DISTRICT TRAINING CERTIFICATION (as applicable)**
STATION NAME	**DISTRICT PERMIT #**
STATION ADDRESS **CITY**	**STATE** **ZIP**

PRESSURE SENSOR LOCATION: DISPENSER FUELING POINT (FP) NUMBERS	**FP #_____**	**PRESSURE SENSOR SERIAL NUMBER: _____**

STEP 8.1	**VALVE SET TO ATMOSPHERIC VALVE POSITION (PER FIG. 2)?**	☐
STEP 8.3	**VST PROCESSOR ACTIVATION PRESSURE: _____Inches WC**	
STEP 8.4	**Is the VST Processor Activation Pressure ≤ 0.4 inches WC?** ☐ **Yes** ☐ **No** **IF NO: THE VST PROCESSOR IS NOT IN COMPLIANCE WITH THE ACTIVATION PRESSURE REQUIREMENTS OF EXHIBIT 2.**	
STEP 8.5	**REFERENCE PORT CAP REPLACED?**	☐
	VALVE SET TO NORMAL VALVE POSITION (PER FIG 2)?	☐

Executive Orders VR-203-C and VR-204-C
VST Phase II EVR System

Exhibit 10
Nozzle Bag Test Procedure

Verification of the integrity of the VST nozzle vapor valve shall be performed on installed nozzles by use of the following test.

1. Seal nozzle(s) at the gasoline dispensing facility (GDF) in a plastic bag, using tape or other means to secure the bag around the base of the nozzle (see Figure 1). Any plastic bag large enough to enclose the nozzle and having a thickness of no greater than 2 mils can be used. In California, 12" x 20" x 2 mil thick bags are available from the Air Resources Board by calling 800-952-5588.

2. Observe the bagged nozzle(s) for 30 seconds.

3. Any nozzle where the bag can be seen visually expanding or collapsing has a defective vapor valve and is not in compliance with Exhibit 2.

4. Record the test results on the "Nozzle Bag Test Results" form provided in this Exhibit. Districts may require use of an alternate form, provided that the alternate form includes the same minimum parameters.

5. Remove the bags from all the nozzles and return the nozzles to the dispenser holsters.

Figure 1
Example of Bagged Nozzle

NOZZLE BAG TEST RESULTS

SOURCE INFORMATION		TEST COMPANY INFORMATION	
Facility (DBA)/Site Address:	Facility Representative/Title:	Test Company Name	# of Nozzles:_____ # Nozzles Tested: _____ # Nozzles Passed: _____ # Nozzles Failed: _____ # Nozzles not Tested: _____
Print Name	Print Name	Print Name of Tester	
Street Address	Title ( )	Street Address	
City Zip	Phone No.	City Zip	
District Inspector:	☐ P/O ☐ S/A ☐ A/C Number:	Date of Test:	Time of Test:

Dispenser	Gas Grade	Nozzle Type	Bag Expanded or Collapsed after 30 Seconds
			☐ Yes ☐ No
			☐ Yes ☐ No
			☐ Yes ☐ No
			☐ Yes ☐ No
			☐ Yes ☐ No
			☐ Yes ☐ No
			☐ Yes ☐ No
			☐ Yes ☐ No
			☐ Yes ☐ No
			☐ Yes ☐ No
			☐ Yes ☐ No
			☐ Yes ☐ No
			☐ Yes ☐ No
			☐ Yes ☐ No
			☐ Yes ☐ No
			☐ Yes ☐ No