VST Installation Procedure for Phase II Coaxial EVR Balance Fuel Hoses

Part Number Series: VSTA-EVR and VDV-EVR

Vapor Systems Technologies, Inc.
650 Pleasant Valley Drive
Springboro, Ohio 45066 (USA)

Toll Free: 1-888-878-4673
Phone: 937-704-9333
Fax: 937-704-9443
www.vsthose.com

Figure 1.

EVR Balance Hanging Hardware Assembly

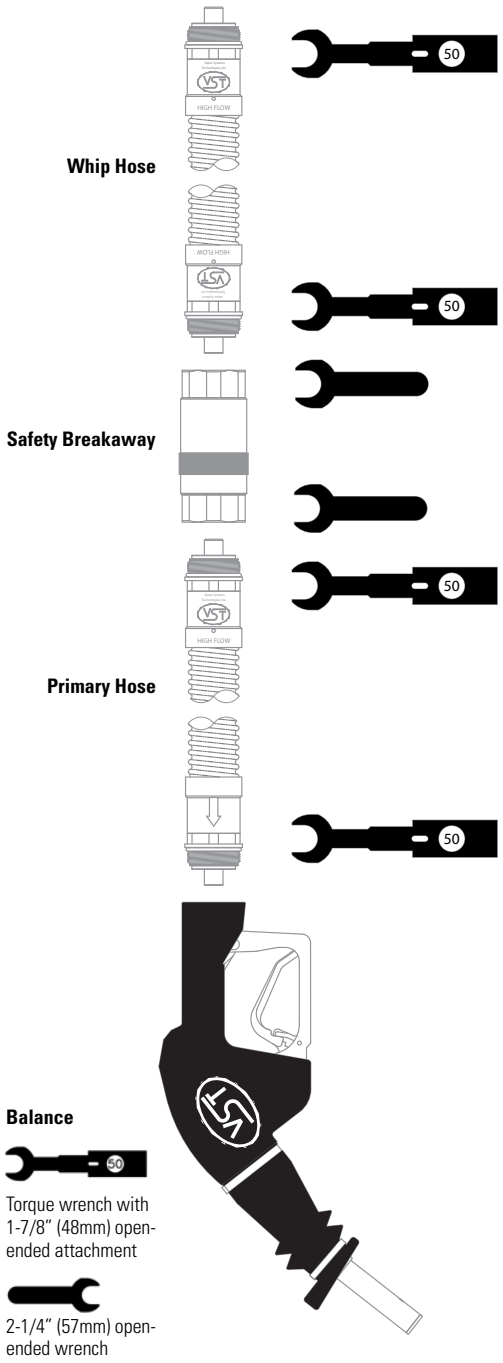

GENERAL INFORMATION

If hanging hardware components are involved in a drive-off or incur other customer abuse, each individual component must be functionally tested prior to customer dispensing activities.

INSTALLATION PREPARATION

This procedure must be followed to insure leak-proof installation and operation of these hose products.

1. Turn off and tag the power to the dispenser. Dispenser must be de-energized prior to service to avoid personal injury.
2. Barricade work area to block vehicle access to the dispenser.
3. Close the dispenser shear valve prior to removing hanging hardware (hoses, safety breakaways, and nozzles).
4. Drain liquid product from the hanging hardware set into an approved container prior to replacing any hanging hardware components.
5. Remove hanging hardware from the dispenser prior to making replacement component assembly connections. VST recommends connecting the whip hose to the dispenser as the last connection during the hanging hardware assembly.

INSTALLATION AND FUNCTION TESTS

1. Initial inspection:
   a. Carefully unpack hose from shipping carton.
   b. Inspect ALL O-Rings on each end of the hose to determine that they are present and undamaged.
   c. Inspect hose exterior for any damage.
   d. Inspect coupling threads for any damage.
2. Lightly lubricate ALL O-Rings on mating connections with petroleum jelly or other suitable lubricant. DO NOT USE pipe dope or thread sealant.
3. Insert the hose coupling into the mating connection and hand-tighten.
   NOTE Flow direction arrows on whip and primary hoses, where applicable, are indicated on hose coupling cuffs.
4. Tighten all the hose-joint connections to 50 foot-pounds of torque. DO NOT OVER TIGHTEN. Use a torque wrench with an open-end attachment to fit the hose couplings and an open-end wrench to properly tighten coupling connections. DO NOT USE channel-locks or pliers to tighten hose joints. Proper ft./lb. torque may not be achieved with these tools.
5. Purge air from the system by pumping one-tenth (1/10) to two-tenths (2/10) of a gallon of fuel into an approved container. Inspect each hose-joint connection for liquid leaks and make proper adjustments if necessary.

6. Check the nozzle shut-off action by dispensing fuel into an approved container at least three times to assure the proper automatic operation of the interlock rod. According to U/L requirement 842, the fuel flow-rate must be greater than 3 gpm for the automatic shut-off mechanism to operate.

   To test, operate the nozzle and submerge the spout tip in fuel until the fuel level covers the vent hole. The main valve of the nozzle automatically shuts off when the liquid covers the vent hole at the end of the spout. The nozzle is not designed to operate on gravity flow. The hold-open latch will disengage automatically when liquid covers the vent hole in the spout. Verify that the fuel flow stops when the nozzle collection sleeve is decompressed (e.g. interlock rod is disengaged). To test that the fuel flow stops, dispense some fuel into an approved container. Slowly remove the nozzle from the container while dispensing fuel. Fuel flow should stop when the nozzle collection sleeve is fully decompressed.
7. Measure the resistance between the dispenser outlet casting and the tip of the nozzle spout. Use an electronic multimeter set on the high range of the ohmmeter function. Resistance should not indicate more than 70,000 ohms per foot of hose. Example: The measured resistance for a 12-foot hose must not exceed 840,000 ohms (840 kilohms)

PROCEDURE FOR POSITIONING THE LIQUID REMOVAL DEVICE

This procedure must be followed to insure proper positioning for the liquid-removal device in Part Number Series: VDV-EVR (See Figure 2).

1. After installing the VST hanging hardware, hold the nozzle straight out from the dispenser so that the compressed bellows is 48 inches away from the front face of the dispenser (simulate when the bellows is compressed in the filler neck of a vehicle) and the spout tip of the nozzle is 30 inches above the pavement. The nozzle spout is to be at a 30-degree angle above the horizontal plane.
2. When the hose and nozzle are held in position as shown in Figure 2, the factory installed liquid-removal device indicator-mark (striped line) on the vapor hose must be located:
   - In the bottom of the loop section within the tolerance range.
   - The allowable tolerance range is 3 inches left or right of the 6:00 o'clock position (lowest point of the loop) as measured along the center line of the hose

   If the liquid-removal device indicator-mark is not located within the tolerance range, the installer must choose one of the following options:
   Adjust the hose retractor (if installed)

   Use a different length whip hose

   Use a different length primary hose

IMPORTANT

It is the installing technician's responsibility to insure that the properly sized and marked hanging hardware is installed at the dispenser. Failure to properly install and locate the liquid removal device may reduce the effectiveness of the product in application resulting in outer hose liquid blockage and failure of the liquid removal test procedure.

MAINTENANCE

Inspect hoses daily for damage, loose connection, or leaks. Replace as necessary. Subject to customer abuse, hose should be replaced when damaged.

The hose is designed and constructed to give lasting service if properly handled and maintained. If for any reason it should need attention, contact your VST distributor for proper disposition.

NOTE Due to abuse, misuse, changing gasoline formulas, variation in maintenance practices, environmental conditions, and/or conditions beyond the manufacturer's control, dispensing equipment may need replacement before five (5) years. Inspections and proper maintenance procedures should be followed by the station manager to determine if replacement is required before five (5) years.

WARNING Unauthorized rebuilding or modifying of hoses voids **ALL** approvals and warranties. VST products must be used in compliance with applicable federal, state and local laws and regulations.

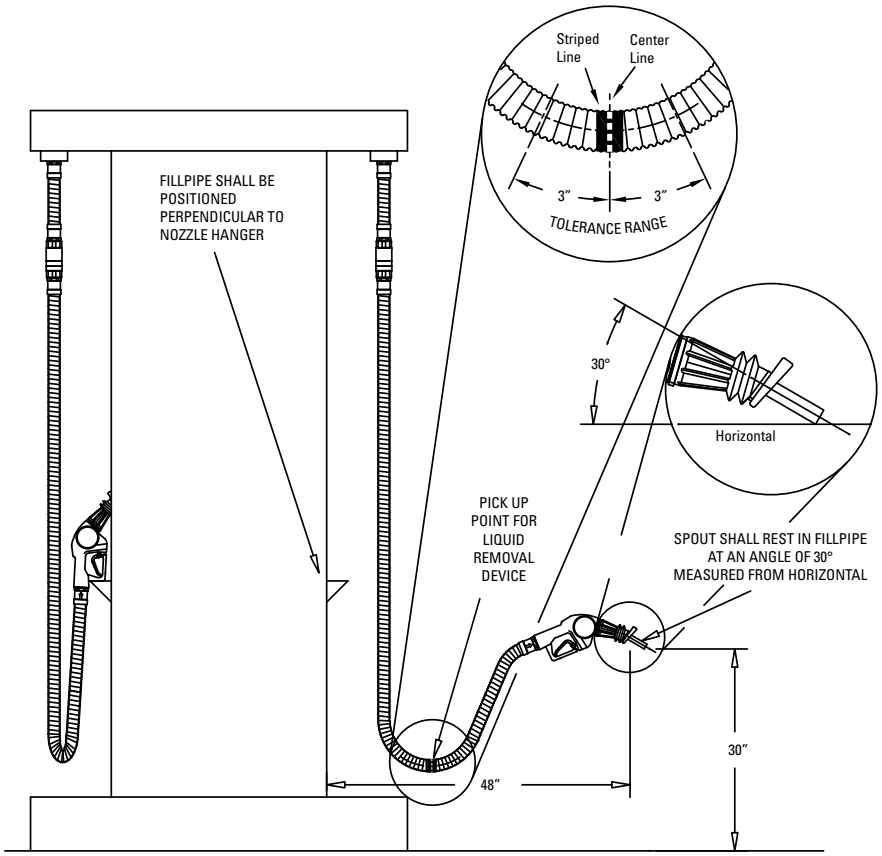

Figure 2. Procedure For Positioning the Liquid Removal Device

Veyance Technologies, Inc.
703 S. Cleveland Massillon Rd
Fairlawn, OH 44333
Ph (330) 664-7000

Maxxim Premier Installation Instructions

1 Install the correct hose length and other hanging hardware on the dispenser. This will include whip hose, breakaway, long hose, and nozzle.

a) When installing Maxxim Premier Plus, the end of the hose stamped “NOZZLE END” must be attached to the nozzle.

b) If a hose retractor is required, use the Goodyear Maxguard retractor clamp; part # 532-365-105-000-00.

c) Do not use high retractor tension. High tension is difficult for customers to handle and it reduces the life of the hose. Retractor tension above 12 pounds will void the warranty.

d) Do not mix Maxxim Premier Plus outer or inner hose with components from other manufacturer’s stage II hoses. The mixed assembly may not be grounded and could cause a serious fire hazard.

e) Make sure that the long hose does not touch the pavement or the top of the island when the nozzle hangs on the dispenser hook.

2 Tighten the swivel nut to 50 ft. lbs. torque using an open end torque wrench. Do not use a pipe wrench because the teeth on the wrench will damage the fitting. This connection is sealed by an o-ring. Do not apply thread sealant.

- Alternate method: If a torque wrench is not available, turn the swivel nut by hand until snug and the o-ring is seated. Then use a wrench to tighten the swivel nut ¼ turn past snug. This connection has straight threads and must be cinched tight to prevent the threads from unscrewing in service.

One source for an open end torque wrench is Belknap Tools, both part #’s are needed:
- o VB-0608005 open end wrench head
- o VB-100ST-I wrench handle preset at the factory to 50 ft lbs

After extended service, the swivel nut o-ring can be lubricated with front end bearing grease or Parker O-Lube

3 Function Test - Measure the resistance between the dispenser outlet casting and the tip of the nozzle spout. Use an electronic multimeter set on the high range of the ohmmeter function. Resistance should not indicate more than 70,000 ohms per foot of hose. Example: The measured resistance for a 12-foot hose must not exceed 840,000 ohms (840 kilohms)

Maxxim Premier Plus Venturi Pick-up Length Instructions

It is the responsibility of the installer to determine the optimum venturi pick-up length and verify that hoses installed on a dispenser have the optimum pick-up location. Failure to properly size the pick-up location will reduce the effectiveness of the venturi in removing liquid blockage from the outer vapor hose and may result in failure of the liquid removal test.

When the Maxxim Premier Plus hose is assembled in the factory, a mark is placed on the outer hose to locate the venturi pick-up location. This mark will help the installer determine whether the hose has the optimum pick-up location for the installation.

4 Hold the nozzle straight out from the dispenser so that the end of the compressed bellows (simulate when the bellows is compressed in the filler neck of a car) is 48 inches away from the front face of the dispenser (see Figure 1). Hold the nozzle so that the tip of the spout is 30 inches

above the pavement and the spout is at a 30° angle above the horizontal plane (see Figure 1). When the nozzle and hose are held in the position shown in Figure 1, the mark on the outer vapor hose should be within 3 inches of the bottom of the loop (see Figure 1).

5 If the mark on the hose is not within the tolerance shown in Figure 1, the installer may:

- Adjust the hose retractor (if installed);
- Install a different length whip hose; or
- Install a different long hose with the optimum venturi pick-up location. To determine the optimum venturi pick-up location (e.g., venturi pick-up tube length), conduct the following:

a) Hold the nozzle and hose in the position shown in Figure 1;
b) Measure the length from the back end of the nozzle (where the hose screws into the nozzle) to the bottom of the loop in the hose. This length is the optimum "pick-up" length for the Maxxim Premier Plus balance venturi hose.
c) Contact your local Goodyear Engineered Products Authorized Distributor to obtain a Maxxim Premier Plus hose with the optimum venturi pick-up tube length.

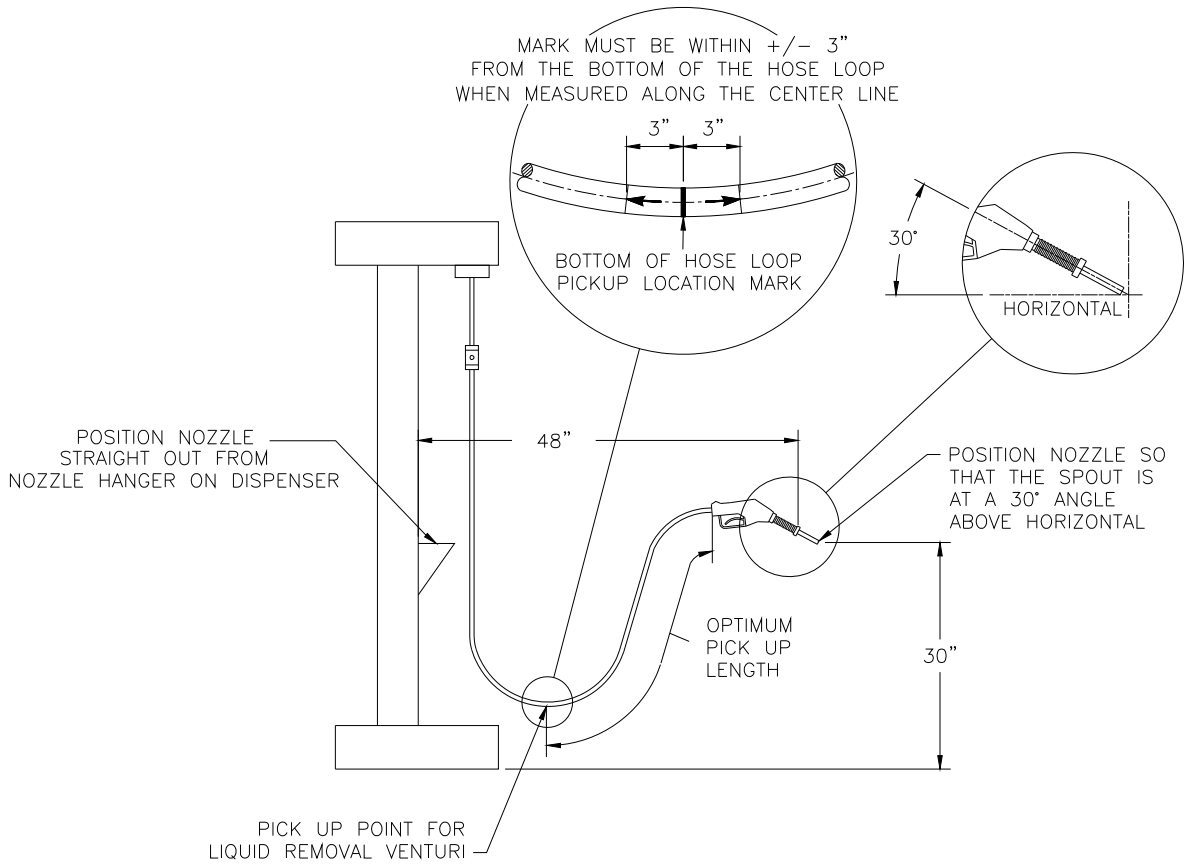

FIGURE 1

Questions on installation should be directed to your local Goodyear Engineered Products Authorized Distributor or Goodyear Engineered Products Customer Service, 1-800-235-4632.