Pressure Sensor

Installation Guide

VEEDER-ROOT

Notice

Veeder-Root makes no warranty of any kind with regard to this publication, including, but not limited to, the implied warranties of merchantability and fitness for a particular purpose.

Veeder-Root shall not be liable for errors contained herein or for incidental or consequential damages in connection with the furnishing, performance, or use of this publication.

Veeder-Root reserves the right to change system options or features, or the information contained in this publication as approved by ARB.

This publication contains proprietary information which is protected by copyright. All rights reserved. No part of this publication may be modified or translated to another language without the prior written consent of Veeder-Root. Contact TLS Systems Technical Support for additional troubleshooting information at 800-323-1799.

DAMAGE CLAIMS / LOST EQUIPMENT

Thoroughly examine all components and units as soon as they are received. If any cartons are damaged or missing, write a complete and detailed description of the damage or shortage on the face of the freight bill. The carrier's agent must verify the inspection and sign the description. Refuse only the damaged product, not the entire shipment.

Veeder-Root must be notified of any damages and/or shortages within 30 days of receipt of the shipment, as stated in our Terms and Conditions.

VEEDER-ROOT'S PREFERRED CARRIER

1. Contact Veeder-Root Customer Service at 800-873-3313 with the specific part numbers and quantities that were missing or received damaged.
2. Fax signed Bill of Lading (BOL) to Veeder-Root Customer Service at 800-234-5350.
3. Veeder-Root will file the claim with the carrier and replace the damaged/missing product at no charge to the customer. Customer Service will work with production facility to have the replacement product shipped as soon as possible.

CUSTOMER'S PREFERRED CARRIER

1. It is the customer's responsibility to file a claim with their carrier.
2. Customer may submit a replacement purchase order. Customer is responsible for all charges and freight associated with replacement order. Customer Service will work with production facility to have the replacement product shipped as soon as possible.
3. If "lost" equipment is delivered at a later date and is not needed, Veeder-Root will allow a Return to Stock without a restocking fee.
4. Veeder-Root will NOT be responsible for any compensation when a customer chooses their own carrier.

RETURN SHIPPING

For the parts return procedure, please follow the appropriate instructions in the "General Returned Goods Policy" pages in the "Policies and Literature" section of the Veeder-Root **North American Environmental Products** price list. Veeder-Root will not accept any return product without a Return Goods Authorization (RGA) number clearly printed on the outside of the package.

©Veeder-Root 2011. All rights reserved.

Pressure Sensor Installation

Contractor Certification Requirements 1
Related Documents 1
Safety Precautions 2
Before You Begin 3
Veeder-Root Parts 3
Tools Required 5
Under Dispenser Installation Steps 5
Vapor Vent Stack Installation Step 13

Figures

Figure 1. Table 2 Component Pictorial 5
Figure 2. Example Pressure Sensor Install In Shear Valve Port - Preferred Non-ISD Installation (Without Vapor Flow Meter) 7
Figure 3. Example Pressure Sensor Install In Vapor Return Line - Non-ISD Installation (Without Vapor Flow Meter) 8
Figure 4. Example Pressure Sensor Install In Shear Valve Port - Preferred ISD Installation 9
Figure 5. Example Pressure Sensor Install In Horizontal Access Fitting Or Vapor Return Line - ISD Installation (With Vapor Flow Meter Below Shear Valve) 10
Figure 6. Example Pressure Sensor Install Below Vertical Access Fitting Or Vapor Return Line - ISD Installation (With Vapor Flow Meter Below Shear Valve) 11
Figure 7. Field wiring Pressure Sensor - Observe Polarity 12
Figure 8. Epoxy sealing field wiring 12
Figure 9. Connecting Pressure Sensor to TLS-3XX Smart Sensor Interface Module 13
Figure 10. Locating Pressure Sensor Enclosure in Vapor Vent Stack 15
Figure 11. Mounting Pressure Sensor Assembly onto Composite Panel 16

Tables

Table 1. Under Dispenser - Pressure Sensor Installation Kit (P/N 330020-515) 3
Table 2. Vapor Vent Stack - Pressure Sensor Installation Kit (P/N 330020-630) 4

Pressure Sensor Installation

This manual contains instructions to install a Veeder-Root (In-Station Diagnostic) Pressure Sensor in a dispenser's vapor return line or in a vapor vent stack.

CAUTION: Installation of the pressure sensor on the vapor vent stack is only allowed at facilities equipped with a "Veeder-Root Vapor Polisher" or "Franklin Fueling System Healy Clean Air Separator.

This manual assumes all preliminary site preparation is completed, and that wiring from the console to the Pressure Sensor junction box is in place and meets the requirements set out in the console's Site Prep manual.

Contractor Certification Requirements

Veeder-Root requires the following minimum training certifications for contractors who will install and setup the equipment discussed in this manual:

Installer (Level 1) Certification: Contractors holding valid Installer Certification are approved to perform wiring and conduit routing; equipment mounting; probe, sensor and carbon canister vapor polisher installation; wireless equipment installation; tank and line preparation; and line leak detector installation.

ATG Technician (Level 2/3 or 4) Certification: Contractors holding valid ATG Technician Certifications are approved to perform installation checkout, startup, programming and operations training, system tests, troubleshooting and servicing for all Veeder-Root Series Tank Monitoring Systems, including Line Leak Detection. In addition, Contractors with the following sub-certification designations are approved to perform installation checkout, startup, programming, system tests, troubleshooting, service techniques and operations training on the designated system.

- Wireless 2
- Tall Tank

VR Vapor Products Certification: Contractors holding a certification with the following designations are approved to perform installation checkout, startup, programming, system tests, troubleshooting, service techniques and operations training on the designated system.

- ISD – In Station Diagnostics
- PMC – Pressure Management Control
- CCVP - Veeder-Root Vapor Polisher
- Wireless – ISD/PMC Wireless
- A current Veeder-Root Technician Certification is a prerequisite for the VR Vapor Products course.

Warranty Registrations may only be submitted by selected Distributors.

Related Documents

576013-879 TLS-3XX Series Consoles Site Prep and Installation Manual

577013-800 ISD Setup and Operation Manual

577013-801 PMC Setup and Operation Manual

577013-937 In-Station Diagnostics (ISD) Install, Setup, & Operation Manual

331940-012 TLS-RF System Control Drawing

577013-964 TLS RF Wireless 2 System (W2) Installation and Maintinance Guide

Safety Precautions

The following safety symbols may be used throughout this manual to alert you to important safety hazards and precautions.

	EXPLOSIVE Fuels and their vapors are extremely explosive if ignited.		**FLAMMABLE** Fuels and their vapors are extremely flammable.
	ELECTRICITY High voltage exists in, and is supplied to, the device. A potential shock hazard exists.		**TURN POWER OFF** Live power to a device creates a potential shock hazard. Turn Off power to the device and associated accessories when servicing the unit.
	WARNING Heed the adjacent instructions to avoid damage to equipment, property, environment or personal injury.		**USE SAFETY BARRICADES** Unauthorized people or vehicles in the work area are dangerous. Always use safety cones or barricades, safety tape, and your vehicle to block the work area.
	READ ALL RELATED MANUALS Knowledge of all related procedures before you begin work is important. Read and understand all manuals thoroughly. If you do not understand a procedure, ask someone who does.		

⚠ WARNING

This product is to be installed and operated in the highly combustible environment of a gasoline dispenser where flammable liquids and explosive vapors may be present.

FAILURE TO COMPLY WITH THE FOLLOWING WARNINGS AND SAFETY PRECAUTIONS COULD CAUSE DAMAGE TO PROPERTY, ENVIRONMENT, RESULTING IN SERIOUS INJURY OR DEATH.

The following hazards exist:

1. **Electrical shock resulting in serious injury or death may result if power is on during installation and the device is improperly installed.**
2. **Product leakage could cause severe environmental damage or explosion resulting in death, serious personal injury, property loss and equipment damage.**

Observe the following precautions:

1. **Read and follow all instructions in this manual, including all safety warnings.**
2. **To be installed in accordance with the National Electrical Code (NFPA 70) and the Code for Motor Fuel Dispensing Facilities and Repair Garages (NFPA 30A).**
3. **Before installing this device, turn Off, tag/lock out power to the system, including console and submersible pumps.**
4. **To protect yourself and others from being struck by vehicles, block off your work area during installation or service.**
5. **Substitution of components may impair intrinsic safety.**

Before You Begin

- Comply with all recommended safety practices identified by OSHA (Occupational Safety and Health Administration) and your employer.
- Review and comply with all the safety warnings in the installation manuals and any other national, State or Local requirements.
- When direct wiring to a TLS console, a 2-conductor, 18 AWG shielded cable must be installed in intrinsically safe conduit from the dispenser or from the vapor vent stack to the TLS console.
- The Pressure Sensor must be installed in a VERTICAL position with the sensing port pointing down. Its connection in the base of the dispenser to the vapor return line must be made BELOW the vapor return line shear valve mechanism, AND BELOW the Vapor Flow Meter outlet (if a flow meter is installed).
- For all connections requiring sealant, use only UL classified yellow Gas/TFE Teflon tape.
- When installing on a vent stack, customer supplied pipe and pipe fittings shall be standard full-weight (ASTM Schedule 40) wrought iron or steel.
- Customer supplied copper tubing shall be soft tempered, 1/4-inch O.D., with a minimum wall thickness of 0.0265 inches.
- Pipe threads shall be in accordance with the Standard for Pipe Threads, General Purpose (Inch) ANSI/ASME B1.20.1-1983.

Veeder-Root Parts

Veeder-Root parts and kits required to install the Pressure Sensor are listed in Table 1 and Table 2.

Table 1. Under Dispenser - Pressure Sensor Installation Kit (P/N 330020-515)

Item	Qty.	Description	P/N
1	1	Pressure sensor	331946-001
2	4	Male connector 68CA-4-4, brass 1/4” tube to 1/4” pipe	514100-430
3	1	Union 62CA-4, brass 1/4” tube size	514100-431
4	1	Plug 59CA-4, brass 1/4” tube size	514100-432
5	1	Universal sensor mounting kit - miscellaneous assortment of U-bolts, brackets, clamps, and fasteners	330020-012
6	2	Wire nut	576008-461
7	1	Sealing pack	514100-304
8	1	Cord grip	331028-011
9	2	Tie wrap	510901-337
10	1	Shim	332061-001
11	1	Ball Valve, 3-way, 1/4”	576008-649
12	1	Copper tube, soft, 1/4” OD, 36” length	332151-001

Table 2. Vapor Vent Stack - Pressure Sensor Installation Kit (P/N 330020-630)

Item	Qty.	Description	P/N
1	1	Pressure sensor	331946-001
2	1	Enclosure, NEMA 4X- modified	333004-001
3	1	Panel, composite, modified	333005-001
4	2	Male elbow 169CA-4-4, brass 1/4" tube to 1/4" pipe	579066-001
5	2	Male connector 68CA-4-4, brass 1/4" tube to 1/4" pipe	514100-430
6	1	Plug 59CA-4, brass 1/4" tube size	514100-432
7	1	Bulkhead union 62CABH-4, brass 1/4" tube size	514100-476
8	2	Washer, 0.469 x 1.125 x 0.063”, zinc	510904-573
9	1	Tube - copper, 1/4” OD, short S bend	333006-001
10	1	Tube - copper, 1/4” OD x 8” length	333018-001
11	1	Ball valve, 3-way, 1/4”	576008-649
12	1	Hub, conduit, liquid tight, 1/2”, zinc	576010-715
13	3	Conduit clamp, 2”, steel - std duty	514100-478
14	3	1/4-20 x 0 .75” hex bolt - steel	026-620-1
15	3	Washer, flat, 1/4”, zinc	514100-374
16	3	1/4-20, hex nut w/lock washer	511000-251
17	1	Vent, porous, flanged, 0.17 x 0.42”	514100-477
18	2	Wire nut	576008-461
19	1	Sealing pack	514100-304
20	1	Cord grip	331028-011
21	2	Tie wrap	510901-337
22	1	Shim	332061-001
23	1	Manual, Installation VR Pressure Sensor	577013-797
24	1	Manual, ISD Setup & Operation	577013-800
25	1	Manual, PMC Setup & Operation	577013-801
26	1	ISD Quick Reference Guide	577013-842
27	1	Warranty card, ISD system	577013-868
28	1	Manual, ISD Setup & Operation, VST	577013-937
29	2	Conduit clamp, 3”, steel, std duty	514100-482
30	1	Label - eVRgreen	333041-001

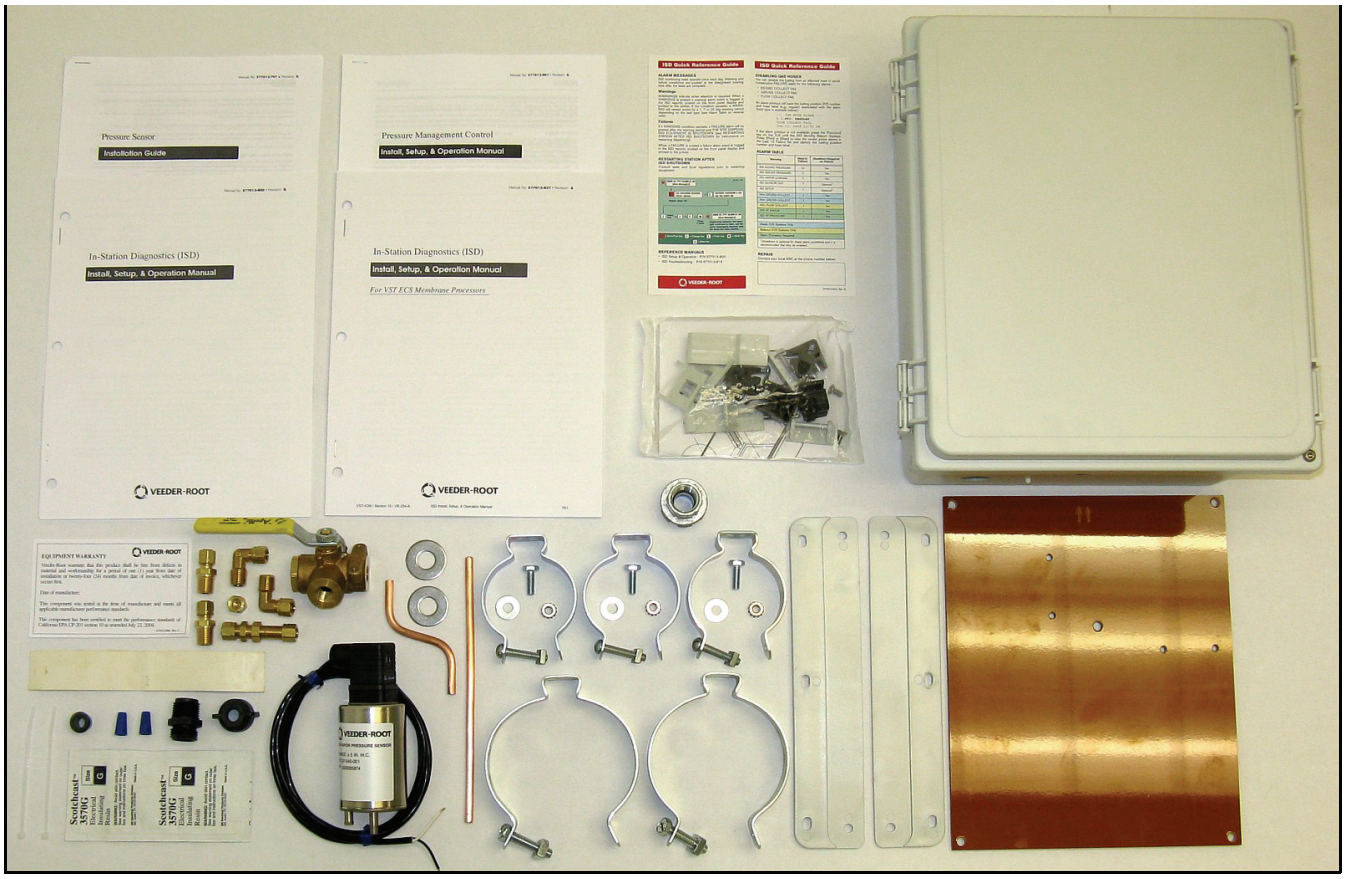

Figure 1. Table 2 Component Pictorial

Tools Required

1. Wrenches suitable for tightening tubing/pipe fittings.
2. Necessary pipe fitter's equipment (including threading equipment as needed) and a non-hazardous work space suitable to modify the dispenser vapor line or the vapor vent stack for Pressure Sensor installation.
3. Torx bit for tamper-resistant screws (VR P/N 330020-635).

   NOTE: this bit is required to open and close the enclosure door.

Under Dispenser Installation Steps

1. Before installing this device, turn Off, tag/lock out power to the system, including console and submersible pumps.
2. Determine which dispenser is closest to the tank being monitored. Remove that dispenser's lower sheet metal doors to gain access to the vapor plumbing.
3. Refer to Pressure Sensor dispenser installation examples in Figure 2 through Figure 6 to locate a suitable port or plumb a suitable fitting for the Pressure Sensor tubing in either the vapor return shear valve or in the

vapor return line. **NOTE: In ISD installations, the pressure port used must be below the vapor flow meter outlet.**

4. Install one of the 68CA-4-4 male connectors (item 2 in Table 1) from the kit into the tapped hole.
5. Install Pressure Sensor (item 1 in Table 1) vertically to the dispenser frame or piping using the 2-inch conduit clamp, rubber shim, and necessary bolts, nuts, and washers from the included Universal Sensor Mounting kit. Wrap the rubber shim (item 10 in Table 1) around the sensor before inserting it into the clamp. Also make sure the sensor cable outlet is facing up and the pressure sensing port tube in the base of the sensor is facing down.
6. Attach one end of the 62CA-4 union (item 3 in Table 1) to the pressure sensing port in the base of the Pressure Sensor.
7. Install the remaining 68CA-4-4 male connectors (item 2 in Table 1) from the kit into each of the three ports in the 3-way calibration valve (item 13 in Table 1).
8. Measure, fabricate, and install a ¼" OD copper tube (item 12 in Table 1) that runs between the 62CA-4 union in the base of the sensor and the center port of the 3-way calibration valve.
9. Measure, fabricate, and install a ¼" OD copper tube that runs between the ¼" tube end of the male connector fitting installed beneath the shear valve mechanism and the right port on the 3-way valve, being careful not to create any potential liquid traps (Note 3-way valve orientation in Figure 6).
10. Screw the 59CA-4 plug, item 4, from the kit onto the left port's male connector. Make sure the valve's handle is set to connect the sensor to the vapor return line and not to the capped (ambient) port.

Important! All plumbing's pitch to drain should be 1/4" vertical per 12" horizontal to eliminate liquid traps.

11. Route the cable from Pressure Sensor to the Pressure Sensor junction box in the dispenser. Observing polarity, connect the sensor wiring to the field wiring from console and cap with wire nuts (see Figure 7) - OR - terminate the wiring in the TLS RF transmitter (W2). In wireless installations, the wiring is not sealed and does not run back to the TLS console and Steps 12, 13 and 14 ARE NOT REQUIRED.
12. Seal wire nuts in epoxy sealant following the instructions in Figure 8.
13. Push the epoxy sealed bag into the junction box. Replace and tighten the junction box cover.
14. Terminate field wiring into TLS Console and connect to Smart Sensor Module (TLS-3XX - Figure 9). Note: observe polarity! The cable length between the console and sensor must not exceed the distance stated in the TLS-3XX Site Prep manual (P/N 576013-879).

    Note: Intrinsically safe devices must be installed in accordance with Article 504 of the National Electrical Code, ANSI/NFPA 70, for installation in the United States, or Section 18 of the Canadian Electrical Code for installations in Canada.

    This intrinsically safe Pressure Sensor P/N 331946-001, has only been evaluated for connection to a UL listed TLS-3XX Liquid Level Gauge / Leak Detector.

    Conductors of different intrinsically safe circuits run in the same cable/conduit must have at least 0.01 inch (0.25 mm) of insulation.
15. After the Pressure Sensor is installed, pressurize the tank ullage space and vapor piping to at least 2 inches WC and test for leaks using leak detection solution.
16. Replace lower dispenser sheet metal doors onto dispensers.

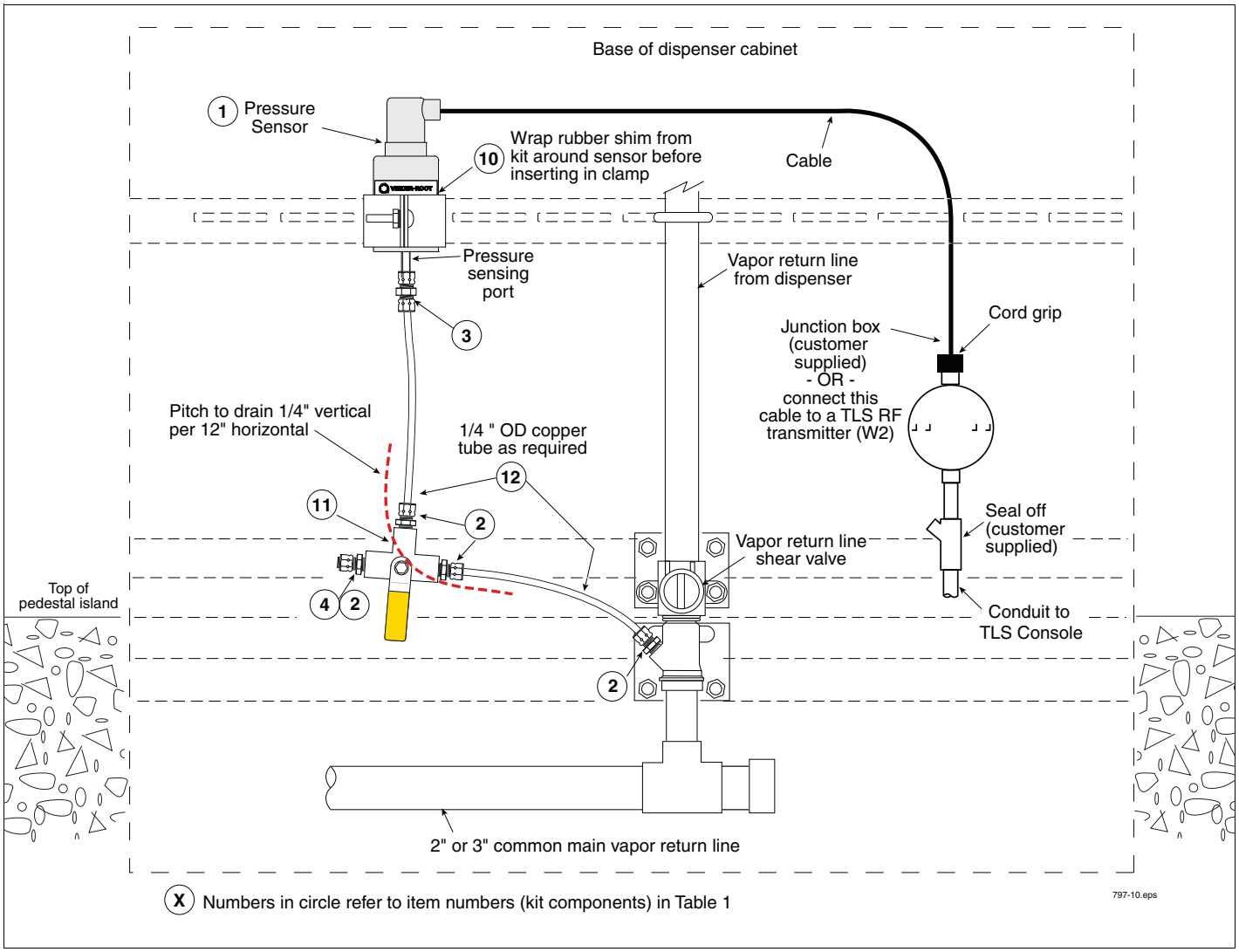

Figure 2. Example Pressure Sensor Install In Shear Valve Port - Preferred Non-ISD Installation (Without Vapor Flow Meter)

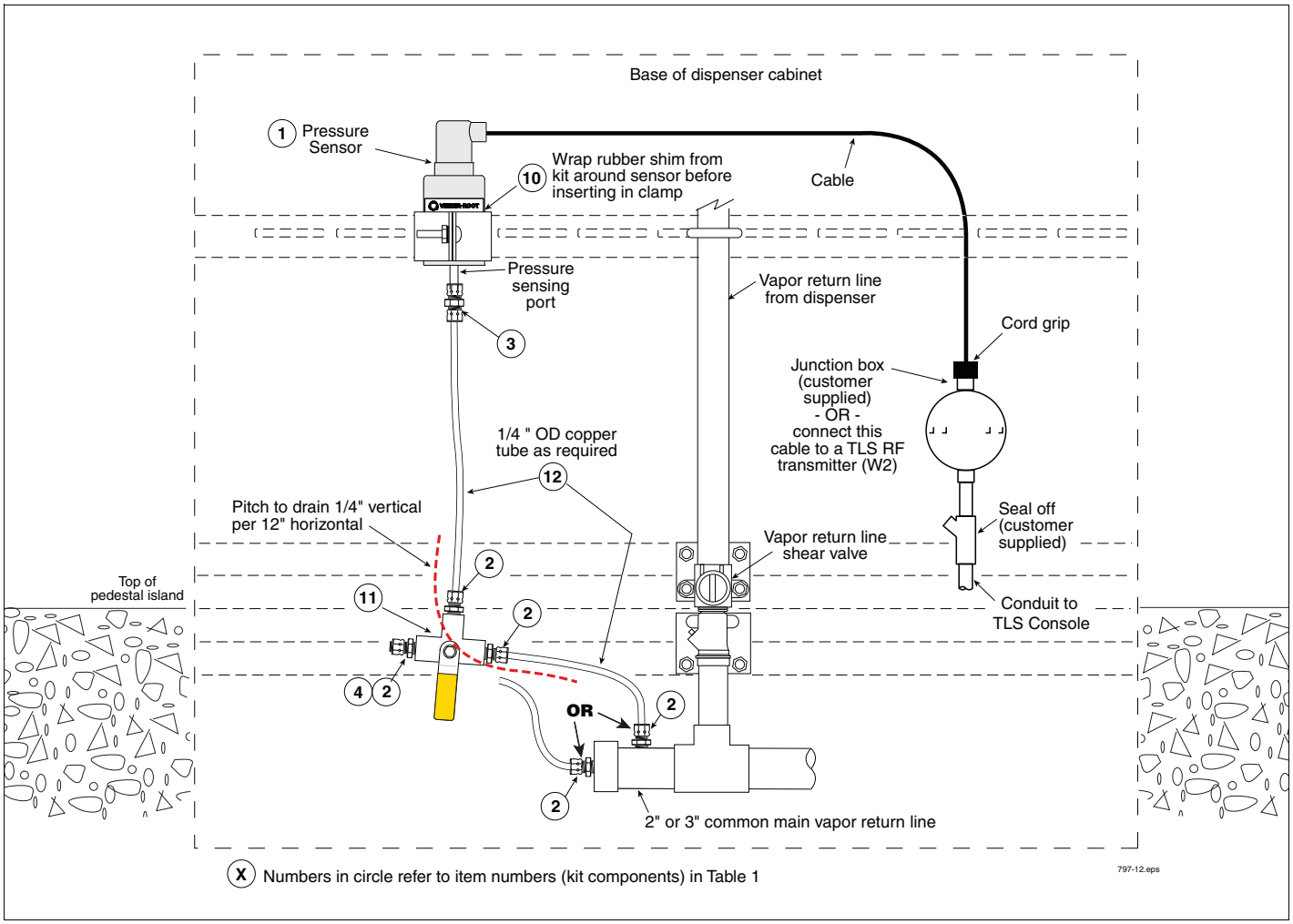

Figure 3. Example Pressure Sensor Install In Vapor Return Line - Non-ISD Installation (Without Vapor Flow Meter)

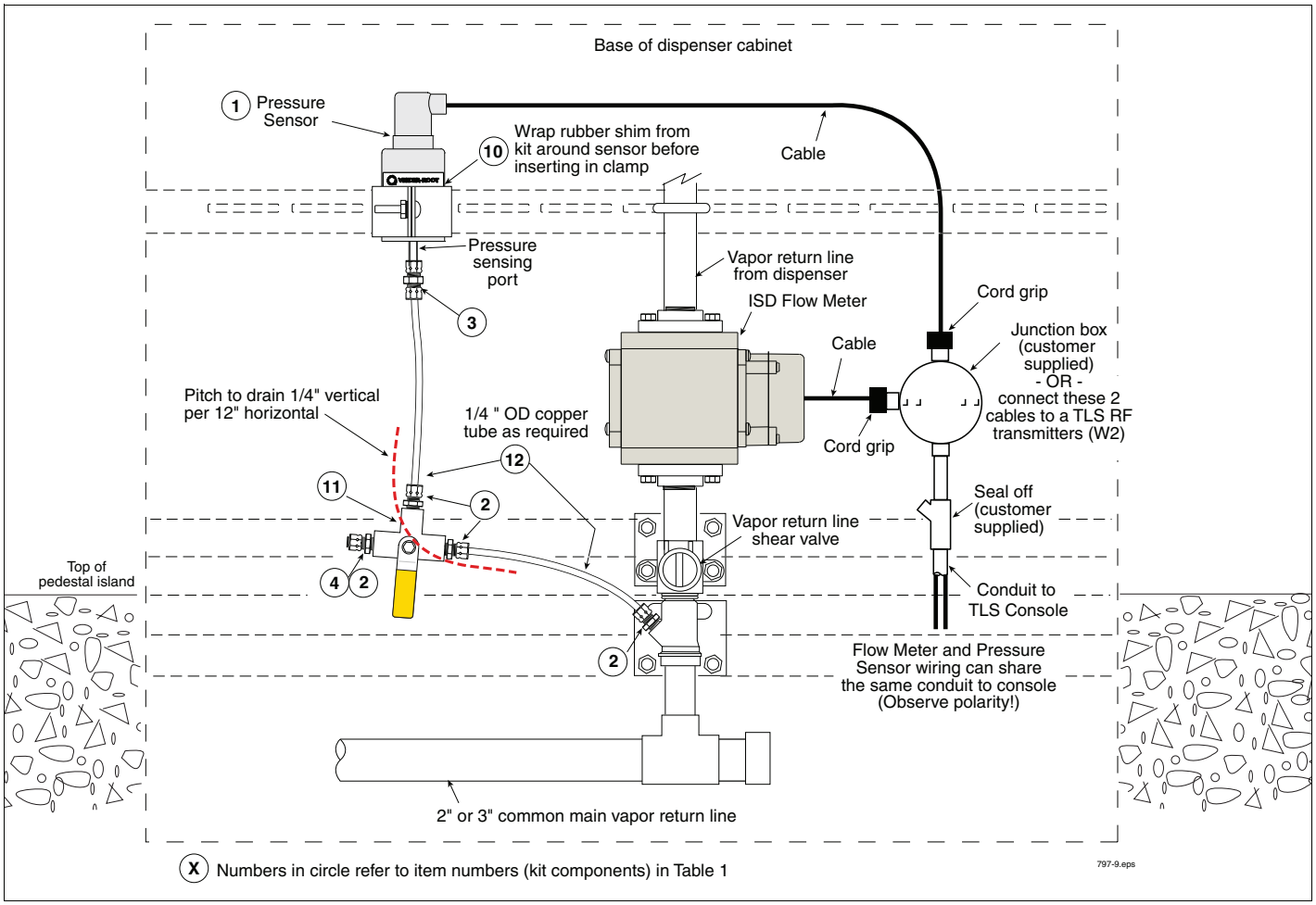

Figure 4. Example Pressure Sensor Install In Shear Valve Port - Preferred ISD Installation (With Vapor Flow Meter Above Shear Valve)

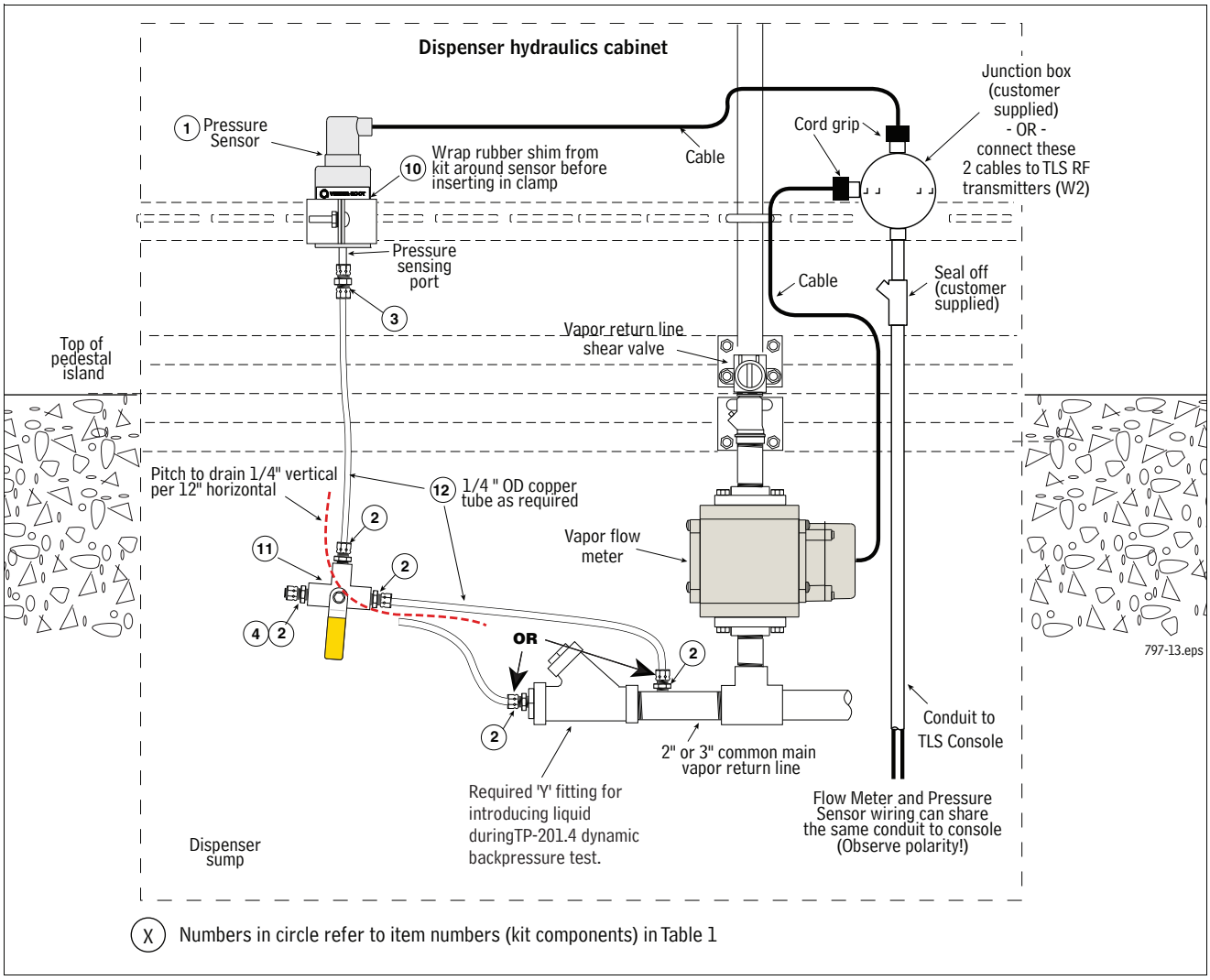

Figure 5. Example Pressure Sensor Install In Horizontal Access Fitting Or Vapor Return Line - ISD Installation (With Vapor Flow Meter Below Shear Valve)

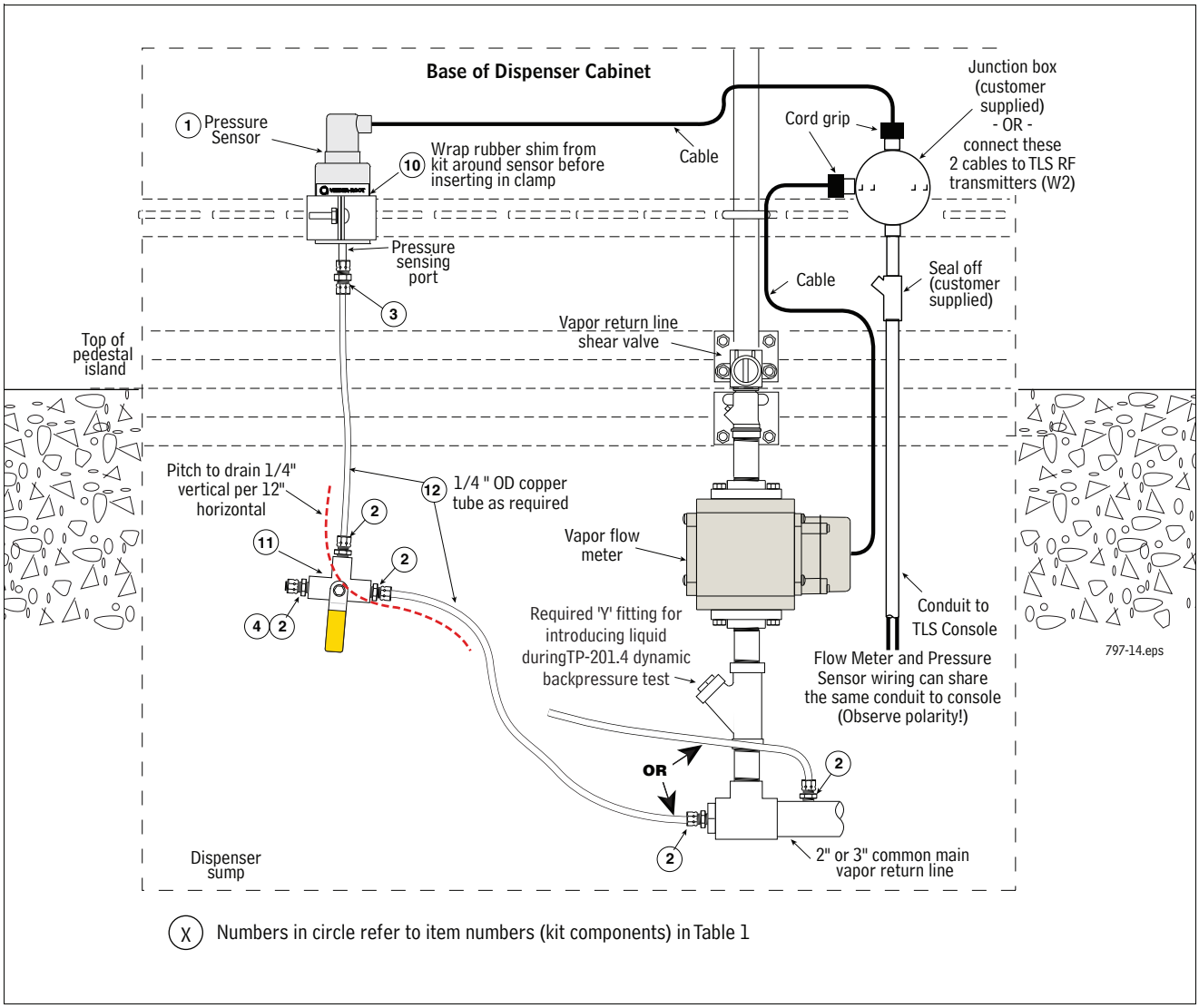

Figure 6. Example Pressure Sensor Install Below Vertical Access Fitting Or Vapor Return Line - ISD Installation (With Vapor Flow Meter Below Shear Valve)

.

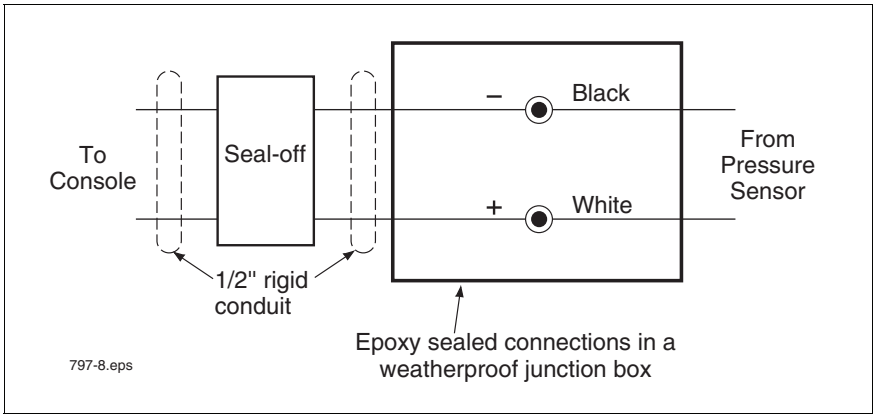

Figure 7. Field wiring Pressure Sensor - Observe Polarity

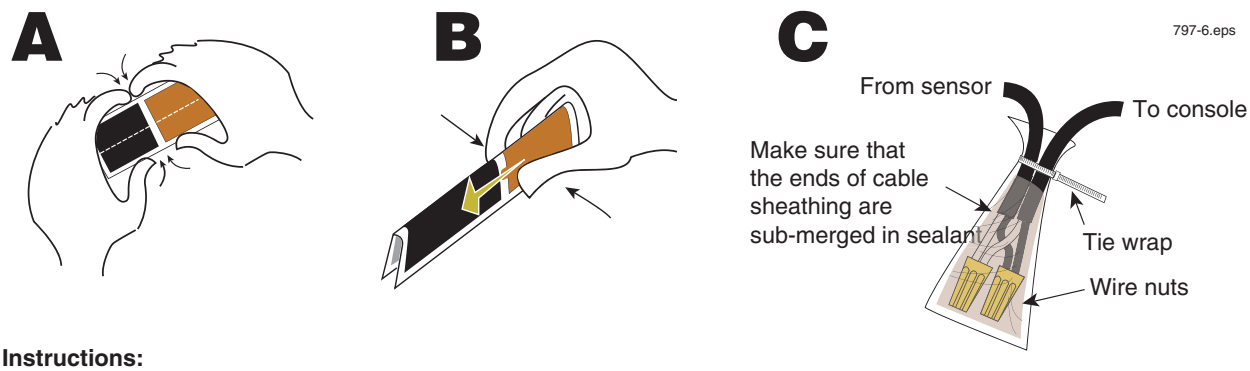

Instructions:

NOTE: When temperature is below 50°F (10°C), keep resin in a warm place prior to mixing (e.g., in an inside pocket next to body).

1. Open epoxy sealant package, and remove resin pak.
2. Holding resin pak as shown in A, bend pak along long length.
3. As shown in B, firmly squeeze the RED SIDE of the resin, forcing it through the center seal and into BLACK SIDE.
4. Mix thoroughly to a uniform color by squeezing contents back and forth 25-30 times.
5. Squeeze mixed, warm resin into one end of bag and cutoff other end.
6. Slowly insert wiring connections into sealing pack until they fit snugly against the opposite end as shown in C.
7. Twist open end of bag and use tie wrap to close it off and position the tie wrapped end up until the resin jells.

CAUTION: Epoxy sealant is irritating to eyes, respiratory system, and skin. Can cause allergic skin reaction. Contains: epoxy resin and Cycloaliphatic epoxycarboxylate.

Precautions: Wear suitable protective clothing, gloves, eye, and face protection. Use only in well ventilated areas. Wash thoroughly before eating, drinking, or smoking.

NOTE: Not required for wireless installations!

Figure 8. Epoxy sealing field wiring

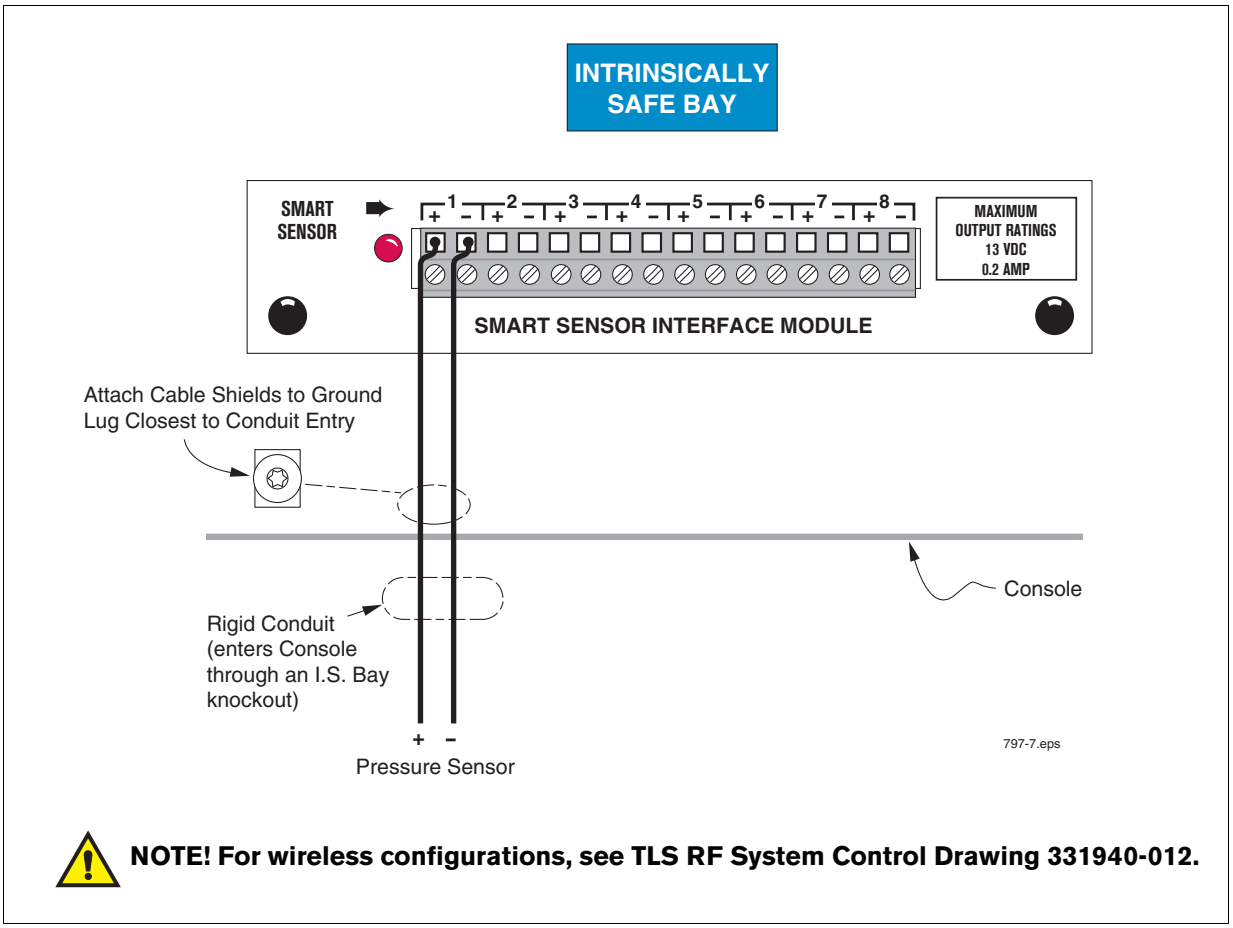

Figure 9. Connecting Pressure Sensor to TLS-3XX Smart Sensor Interface Module

Vapor Vent Stack Installation Step

1. Before installing this device, perform all required safety procedures to gain access inside the vapor vent stack.
2. Determine which vapor vent stack line is closest to the tank being monitored. Select this line for the addition of the pressure sensor.

   CAUTION: Installation of the pressure sensor on the vapor vent stack is only allowed at facilities equipped with a "Veeder-Root Vapor Polisher" or "Franklin Fueling System Healy Clean Air Separator.

3. Locate a suitable port in an existing Schedule 40 piping fitting (tee, cross, etc.) or plumb a suitable Schedule 40 pipe fitting (tee, cross, etc.) into the vapor vent stack line (maximum length of copper tubing limited by dimension in Figure 10).
4. Install the pressure sensor (item 1 in Table 2) vertically onto the center of the composite panel (item 3 in Table 2) using a 2-inch conduit clamp, rubber shim, and necessary bolts, nuts, and washers included in the kit. Be sure the top symbol on the panel is facing upwards (see Figure 11). Wrap the rubber shim (item 22 in Table 2) around the sensor before inserting it into the clamp. Also make sure the sensor cable outlet is facing up

and the pressure sensing port tube in the base of the sensor is facing down. Locate the pressure sensor in the clamp, but leave the conduit clamp screw somewhat loose for later sensor height adjustment.

5. Install two169CA-4-4 male elbows (item 4 in Table 2) into each end of the 3-way calibration valve (item 11 in Table 2) as shown (see Figure 11).
6. Install one 68CA-4-4 male connector (item 5 in Table 2) into the center port of the 3-way calibration valve, and then directly attach it to the pressure sensor inlet port (see Figure 7).
7. Screw the 59CA-4 plug (item 6 in Table 2) onto the left port's male elbow (see Figure 11).
8. Install the two plastic enclosure mounting plates to the back of the enclosure. Use the four short flat-head screws included in the enclosure hardware bag.
9. Install the composite panel into the enclosure (item 2 in Table 2) such that the sensor cable outlet is facing up and the pressure sensing port tube in the base of the sensor is facing down. The top symbol on the panel should be facing upward. Use the four short screws included in the enclosure hardware bag.
10. Make sure that the white flanged porous vent (factory installed - item 17 in Table 2) is still securely installed into the hole in the bottom of the enclosure (see Figure 11).
11. Insert the S-bend ¼" OD copper tube (item 9 in Table 2) into the right-side male elbow of the 3-way calibration valve, but do not fully tighten the compression nut (see Figure 11).
12. Locate the 62CABH-4 bulkhead union (item 7 in Table 2) and remove the compression nut and the adjustable nut then place a large washer (item 8 in Table 2) against the fixed, integral body nut. Slide the compression nut that was removed onto the bottom portion of the S-bend tube.
13. Partially insert the bulkhead union into the bottom center hole in the enclosure. Slide a large washer over the body, and thread the adjustable nut back onto the body.
14. Insert the bottom portion of the S-bend tube into the bulkhead union and fully tighten the bulkhead union adjustable nut against the large washer and enclosure wall. Adjust the pressure sensor vertically in the shim / conduit clamp to make sure the S-bend tube is fully inserted into the union and male elbow.
15. Fully tighten the compression nuts to connect the S-bend tube to the union and to the male elbow. Tighten the sensor conduit clamp screw to secure the sensor in its final vertical position (see Figure 11).
16. Mount the plastic enclosure onto the vapor vent stack or suitable rigid structure ABOVE the vapor vent stack port using two conduit clamps (for 2" or 3" pipe), bolts, nuts, and washers included, or use other customer supplied suitable mounting hardware (Example: Unistrut®). Leave the mounting hardware somewhat loose for later enclosure height adjustment (see Figure 10).
17. Measure, fabricate, and install customer supplied pipe and pipe fittings between the vapor vent stack port and within a few inches of the bulkhead union in the bottom of the enclosure.
18. Install one 68CA-4-4 male connector (item 5 in Table 2) onto the top of the new pipe (see View A-A, Figure 10).
19. Measure, fabricate, and install ¼" OD copper tubing (item 10 in Table 2) between the bulkhead union and the male connector. Adjust the enclosure vertically on vent pipe to make sure the copper tube is fully inserted into the bulk head union and male connector.
20. Fully tighten the compression nuts to secure the fabricated tube to the bulkhead union and to the male connector. Tighten the enclosure mounting hardware to secure the enclosure in its final vertical position.

    Note: **Important!** All plumbing's pitch to drain should be 1/4" vertical per 12" horizontal to eliminate any potential liquid traps.

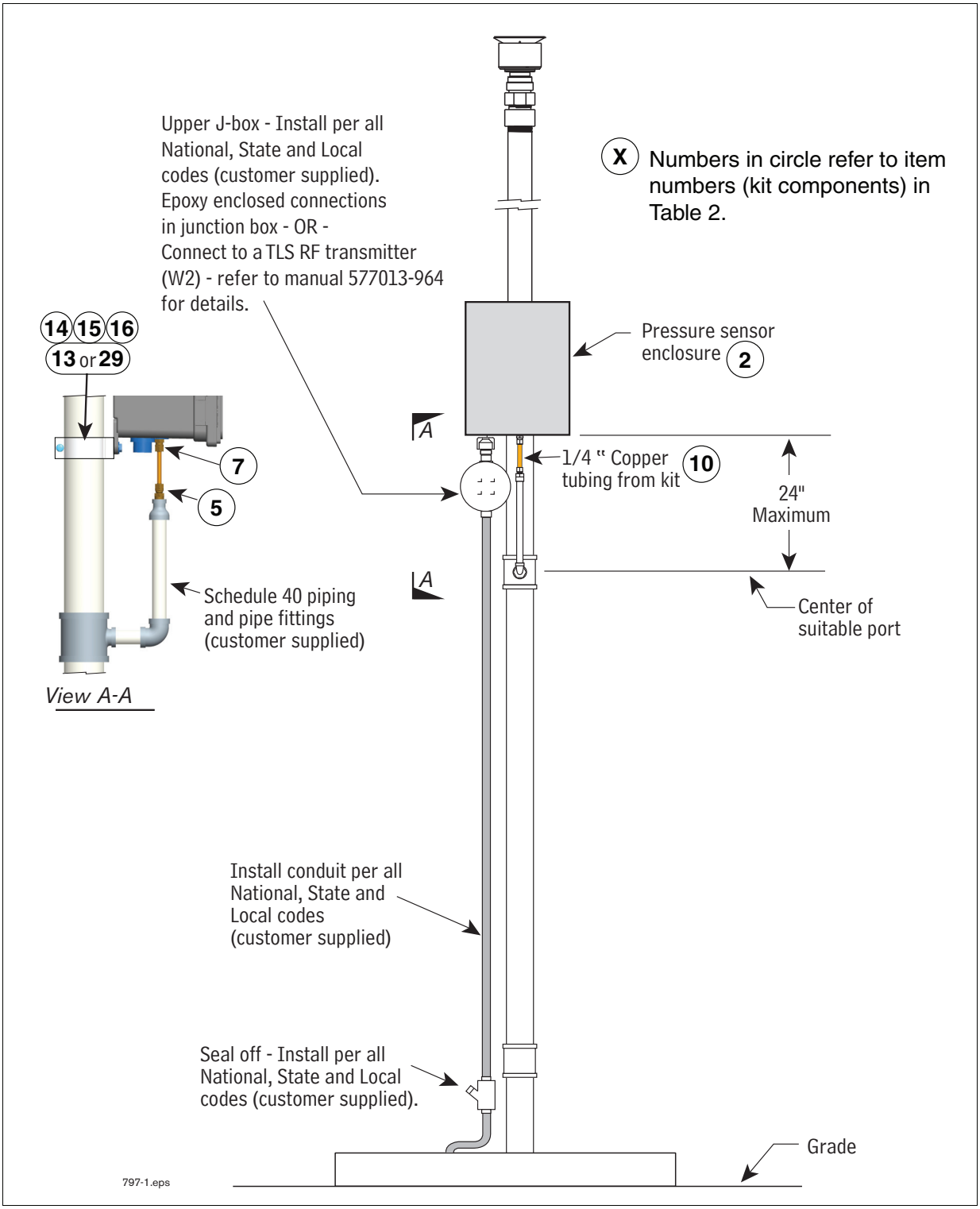

Figure 10. Locating Pressure Sensor Enclosure in Vapor Vent Stack

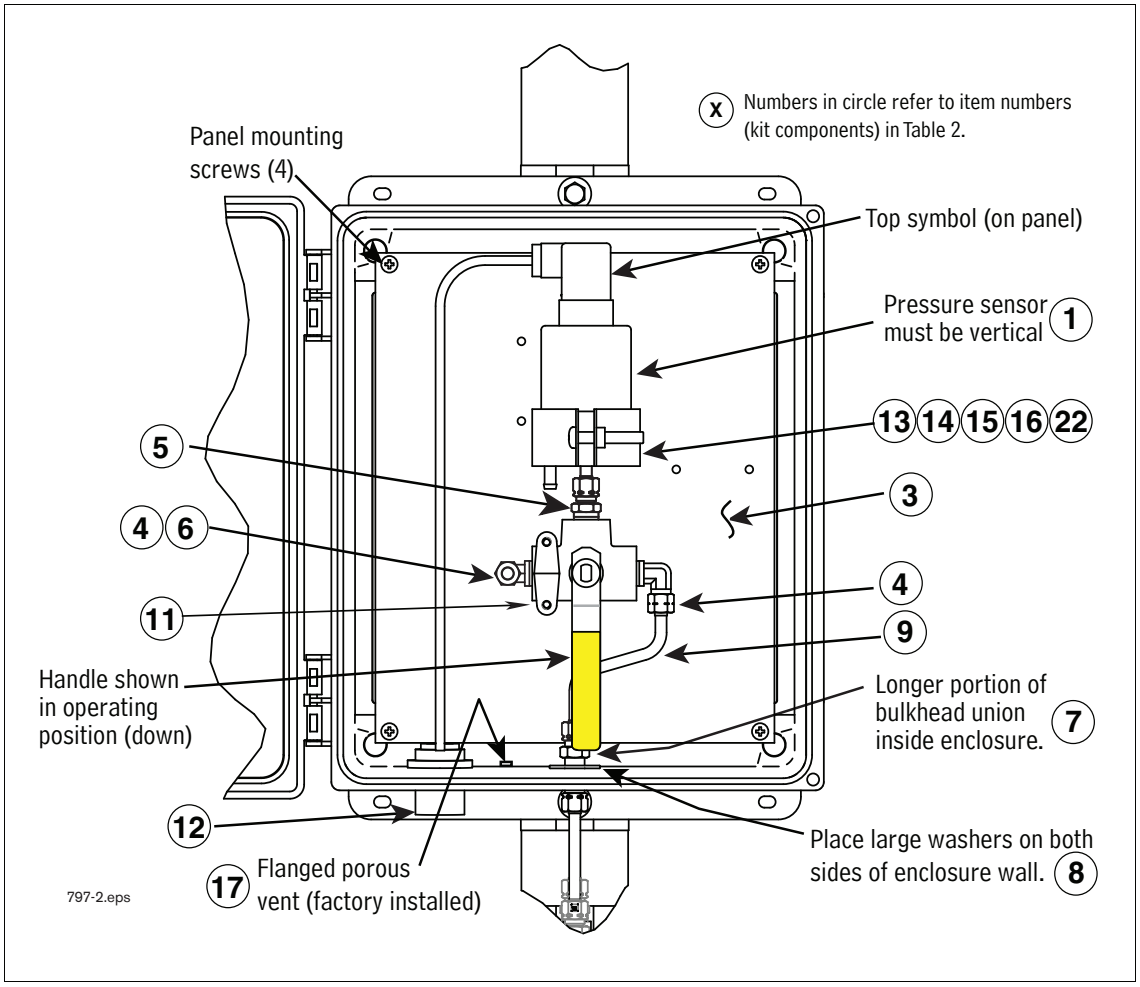

Figure 11. Mounting Pressure Sensor Assembly onto Composite Panel

21. Make sure the valve's handle is set to connect the sensor to the vapor vent stack and not to the capped (ambient) port.
22. Install two tamper-resistant screws from the enclosure hardware bag into the two holes on the enclosure door (if not already installed) using a Torx bit for tamper-resistant screws. Discard any remaining items in the enclosure hardware bag.
23. When direct wiring to a TLS console, install ½" electrical conduit from the conduit hub in the bottom of the enclosure to the customer supplied weather-proof junction box (see Figure 10). For wireless installations, using the TLS RF, Steps 23 - 27 are not required.
24. Route the cable from the pressure sensor to the junction box under the enclosure. Observing polarity, connect the sensor wiring to the field wiring from console and cap with wire nuts (see Figure 10).
25. Seal wire nuts in epoxy sealant following the instructions in Figure 8.
26. Push the epoxy sealed bag into the junction box. Replace and tighten the junction box cover.

27. Terminate field wiring into TLS Console and connect to Smart Sensor Module (TLS console - Figure 9). Note: observe polarity! The cable length between the console and sensor must not exceed the distance stated in the TLS-3XX Site Prep manual (P/N 576013-879).

    Note: Intrinsically safe devices must be installed in accordance with Article 504 of the National Electrical Code, ANSI/NFPA 70, for installation in the United States, or Section 18 of the Canadian Electrical Code for installations in Canada.

    This intrinsically safe Pressure Sensor (P/N 331946-001), has only been evaluated for connection to a UL listed TLS-3XX Liquid Level Gauge / Leak Detector.

    Conductors of different intrinsically safe circuits run in the same cable/conduit must have at least 0.01 inch (0.25 mm) of insulation.
28. After the Pressure Sensor is installed, pressurize the tank ullage space and vapor piping to at least 2 inches WC and test for leaks using leak detection solution.
29. Close the enclosure door and secure by threading the tamper-resistant screws into the enclosure body using a Torx bit for tamper-resistant screws.
30. Affix the eVRgreen label (item 30 in Table 2) to the enclosure door as desired.

VEEDER-ROOT

For technical support, sales or other assistance, please visit:
www.veeder.com